Lucent Technologies
Bell Labs Innovations

DEFINITY®

Enterprise Communications Server

Release 6

Maintenance for R6csi
Volumes 1 & 2

555-230-129
Comcode 108136102
Issue 2
January 1998

Copyright © 1998, Lucent Technologies
All Rights Reserved
Printed in U.S.A.

Notice
Every effort was made to ensure that the information in this book was complete and accurate at the time of printing. However, information is subject to change.

Your Responsibility for Your System's Security
Toll fraud is the unauthorized use of your telecommunications system by an unauthorized party, for example, persons other than your company's employees, agents, subcontractors, or persons working on your company's behalf. Note that there may be a risk of toll fraud associated with your telecommunications system and, if toll fraud occurs, it can result in substantial additional charges for your telecommunications services.

You and your system manager are responsible for the security of your system, such as programming and configuring your equipment to prevent unauthorized use. The system manager is also responsible for reading all installation, instruction, and system administration documents provided with this product in order to fully understand the features that can introduce risk of toll fraud and the steps that can be taken to reduce that risk. Lucent Technologies does not warrant that this product is immune from or will prevent unauthorized use of common-carrier telecommunication services or facilities accessed through or connected to it. Lucent Technologies will not be responsible for any charges that result from such unauthorized use.

Federal Communications Commission Statement
Part 15: Class A Statement. This equipment has been tested and found to comply with the limits for a Class A digital device, pursuant to Part 15 of the FCC Rules. These limits are designed to provide reasonable protection against harmful interference when the equipment is operated in a commercial environment. This equipment generates, uses, and can radiate radio frequency energy and, if not installed and used in accordance with the instruction manual, may cause harmful interference to radio communications. Operation of this equipment in a residential area is likely to cause harmful interference, in which case the user will be required to correct the interference at his own expense.

Part 68: Network Registration Number. This equipment is registered with the FCC in accordance with Part 68 of the FCC Rules. It is identified by FCC registration number AS593M-13283-MF-E.
Refer to "Federal Communications Commission Statement" in "About This Book" for more information regarding Part 68.

Canadian Department of Communications (DOC) Interference Information
This digital apparatus does not exceed Class A limits for radio noise emission set out in the radio interference regulation of the Canadian Department of Communications.

Le Présent Appareil Nomérique n'émet pas de bruits radioélectriques dépassant les limites applicables aux appareils manicures de la class A préscrites dans le reglement sur le brouillage radioélectrique édicté par le ministére des Communications du Canada.

Ordering Information
Call: Lucent Technologies BCS Publications Center
Voice 1 800 457-1235 International Voice 317 322-6791
Fax 1 800 457-1764 International Fax 317 322-6849
Write: Lucent Technologies BCS Publications Center
P.O. Box 4100
Crawfordsville, IN 47933
Order: Document No. 555-230-129
Comcode 108136102
Issue 2, January 1998
For more information about Lucent Technologies documents, refer to the section entitled, "Related Documents" in "About This Book."

You can be placed on a Standing Order list for this and other BCS documents you may need. Standing Order will enable you to automatically receive updated versions of individual documents or document sets, billed to account information that you provide. For more information on Standing Orders, or to be put on a list to receive future issues of this document, please contact the Lucent Technologies BCS Publications Center.

Lucent Technologies Fraud Intervention
If you *suspect that you are being victimized* by toll fraud and you need technical support or assistance, call BCS Technical Service Center Toll Fraud Intervention Hotline at 1 800 643-2353.

European Union Declaration of Conformity
The "CE" mark affixed to the DEFINITY® equipment described in this document indicates that the equipment conforms to the following European Union (EU) Directives:

- Electromagnetic Compatibility (89/336/EEC)
- Low Voltage (73/23/EEC)
- Telecommunications Terminal Equipment (TTE)
  i-CTR3 BRI and i-CTR4 PRI

For more information on standards compliance, contact your local distributor.

Comments
To comment on this document, return the comment card at the front of the document.

Acknowledgment
This document was prepared by the BCS Product Documentation Development group, Lucent Technologies, Denver, CO 80234-2703 and Columbus, OH.

Contents

Contents iii

About This Document xiii

- Purpose xiii
- Intended Audience xiii
- Organization xiv
- Conventions Used xv
- Safety Precautions xvi
- Security Issues xvi
- Standards Compliance xvii
- Electromagnetic Compatibility Standards xviii
- Trademarks and Service Marks xix
- Related Documents xx
- Federal Communications Commission Statement xx
- How to Order Documentation xxii
- How to Comment on This Document xxii
- Where to Call for Technical Support xxiii

1 Maintenance for R6csi Compact Modular Cabinets 1-1

- What's new for R6.2csi 1-1
- R6csi design 1-6
- Circuit Packs 1-9
- Maintenance Objects 1-13
- Alarm and Error Reporting 1-14
- Maintenance Testing 1-14
- Preventive Maintenance Procedures 1-17
- Initialization and Recovery 1-19
- Set Neon Voltage (Ring Ping) 1-23
- Logging On/Off 1-24
- Procedure for SPE-Down Mode 1-36
- Reseating/Replacing Circuit Packs 1-38
- Removing Power 1-39
- Restoring Power 1-40
- System Backup 1-41
- Troubleshooting Features 1-45

- Install DS1 CPE Loopback Jack (T1 Only) 1-70
- LED Interpretation 1-82
- Multimedia Call Handling 1-88
- TN760D Tie Trunk Option Settings 1-95
- TN464E/F Option Settings 1-97
- Troubleshooting Multimedia Call Handling (MMCH) 1-99
- Comcodes for Release 6.2csi 1-106

2 Maintenance Commands for R6csi 2-1

- System Command Structure 2-1
- busyout access-endpoint 2-2
- busyout board 2-3
- busyout cdr-link 2-5
- busyout data-module 2-6
- busyout journal-printer 2-7
- busyout link 2-9
- busyout mis 2-10
- busyout pms-link 2-11
- busyout port 2-12
- busyout pri-endpoint 2-13
- busyout sp-link 2-14
- busyout station 2-15
- busyout tdm 2-16
- busyout tone-clock 2-17
- busyout trunk 2-18
- cancel hardware-group 2-20
- change circuit-packs 2-20
- change synchronization 2-22
- change system-parameters maintenance 2-24
- clear audits 2-33
- clear errors 2-34
- clear interface 2-34
- clear isdn-testcall 2-34
- clear link 2-35
- clear mst 2-35
- clear pkt 2-35

- clear port 2-35
- disable administered-connection 2-36
- disable mst 2-36
- disable suspend-alm-orig 2-36
- disable synchronization-switch 2-37
- disable test-number 2-37
- display alarms 2-38
- display communication-interface 2-43
- display disabled-tests 2-44
- display errors 2-45
- display events 2-51
- display initcauses 2-53
- display memory-configuration 2-56
- display port 2-57
- display synchronization 2-58
- display system-parameters maintenance 2-60
- display time 2-69
- download update-file 2-70
- enable administered-connection 2-73
- enable mst 2-73
- enable suspend-alm-orig 2-73
- enable synchronization-switch 2-74
- enable test-number 2-75
- format card-mem 2-75
- get vector 2-75
- list configuration 2-77
- list config software-version 2-80
- list disabled-mos 2-84
- list history 2-86
- list isdn-testcall 2-88
- list marked-ports 2-89
- list measurements 2-90
- list mst 2-94
- list suspend-alm-orig 2-118
- list sys-link 2-119

- list testcalls 2-120
- mark port 2-124
- monitor bcms 2-125
- monitor health 2-129
- monitor security-violations 2-132
- monitor system 2-133
- monitor traffic 2-139
- monitor trunk 2-141
- recycle carrier 2-142
- release access-endpoint 2-142
- release board 2-143
- release cdr-link 2-144
- release data-module 2-145
- release journal-printer 2-146
- release link 2-147
- release mis 2-148
- release modem-pool 2-149
- release pms-link 2-150
- release port 2-151
- release pri-endpoint 2-152
- release sp-link 2-153
- release station 2-154
- release tdm 2-155
- release tone-clock 2-156
- release trunk 2-157
- reset board 2-158
- reset io-processor 2-159
- reset interface 2-160
- reset packet-interface 2-160
- reset switch-control 2-161
- reset system 2-161
- restore announcements 2-161
- resume hardware-group 2-164
- save announcements 2-164
- save translation 2-166

- set options 2-167
- set signaling-group 2-173
- set synchronization 2-173
- set tdm 2-174
- set time 2-174
- set tone-clock 2-175
- set vector 2-176
- status access-endpoint 2-177
- status administered-connection 2-178
- status attendant 2-180
- status audits 2-181
- status bri-port 2-189
- status card-mem 2-196
- status cdr-link 2-199
- status cleared-alarm-notif 2-200
- status conference 2-200
- status data-module 2-236
- status esm 2-237
- status hardware-group 2-238
- status health 2-240
- status interface 2-242
- status isdn-testcall 2-243
- status journal-link 2-245
- status link 2-246
- status packet-interface 2-246
- status pms-link 2-247
- status pri-endpoint 2-248
- status processor-channel 2-250
- status signaling-group 2-252
- status sp-link 2-254
- status station 2-255
- status synchronization 2-257
- status sys-link 2-258
- status system 2-260
- status trunk 2-264

- status tsc-administered 2-267
- status tti 2-268
- test access-endpoint 2-270
- test alarms 2-271
- test analog-testcall 2-276
- test board 2-279
- test card-mem 2-281
- test cdr-link 2-284
- test customer-alarm 2-286
- test data-module 2-287
- test ds1-loop 2-289
- test eda-external-device-alrm 2-291
- test environment 2-293
- test hardware-group 2-296
- test inads-link 2-302
- test interface 2-304
- test isdn-testcall 2-305
- test journal-printer 2-307
- test led 2-309
- test memory 2-311
- test network-control 2-313
- test pkt 2-315
- test packet-interface 2-316
- test pms-link 2-318
- test port 2-320
- test pri-endpoint 2-322
- test processor 2-324
- test signaling-group 2-326
- test sp-link 2-327
- test station 2-330
- test synchronization 2-331
- test sys-link 2-333
- test tdm 2-336
- test tone-clock 2-337
- test trunk 2-339

- test tsc-administered 2-341
- upgrade software 2-343

3 Maintenance Objects for R6csi 3-1

- 12V-PWR (12 Volt Power Supply) 3-1
- ADM-CONN (Administered Connection) 3-5
- ADX8D-BD (AUDIX Circuit Pack) 3-9
- ADX8D-PT (AUDIX Digital Port) 3-10
- ADX16D-B (16 Port AUDIX Circuit Pack) 3-18
- ADX16A-BD (AUDIX Circuit Pack) 3-19
- ADX16D-P (16-Port AUDIX Digital Port) 3-20
- ADX16A-PT (AUDIX Analog Line/Control Link) 3-28
- ALARM-PT (ALARM PORT) 3-35
- ANL-BD (Analog Line Circuit Pack) 3-36
- ANL-LINE (8-Port Analog Line), ANL-NE-L (8-Port Neon Analog Line) 3-37
- ANN-BD (Announcement Circuit Pack) 3-57
- ANN-PT (Announcement Port) 3-76
- ANNOUNCE (Announce) 3-87
- BRI-BD/LGATE-BD (ISDN-BRI Line Circuit Pack) 3-92
- BRI-DAT (ISDN-BRI) 3-99
- BRI-PORT (ISDN-BRI Port), ABRI-PORT (ASAI ISDN-BRI Port) 3-100
- BRI-SET, ASAI-ADJ, BRI-DAT 3-122
- CABINET (Cabinet Sensors) 3-151
- CAP-MEM (Memory Card Capacity) 3-157
- CARD-MEM (Memory Card) 3-160
- CLSFY-BD (Call Classifier Circuit Pack) 3-177
- CLSFY-PT (Call Classifier Port) 3-178
- CO-BD (Central Office Trunk Circuit Pack) 3-183
- CO-DS1 (DS1 CO Trunk) 3-184
- CO-TRK (CO Trunk) 3-200
- CONFIG (System Configuration) 3-225
- CUST-ALM (Customer-Provided Alarming Device) 3-226
- DATA-BD (Data Channel Processor Circuit Pack) 3-229
- DATA-CHL (Data Channel) 3-234
- DATA-CON (Network Control Driver) 3-259

- DAT-LINE (Data Line) 3-261
- DETR-BD (International Version) 3-269
- DID-BD (Direct Inward Dial Trunk Circuit Pack) 3-270
- DID-DS1 (DS1 DID Trunk) 3-271
- DID-TRK (DID Trunk) 3-282
- DIG-BD (Digital Line Circuit Pack) 3-298
- DIG-LINE (Digital Line) 3-299
- DIOD-DS1 (DS1 DIOD Trunk) 3-324
- DIOD-TRK (DIOD Trunk), DIOD-BD (DIOD Circuit Pack) 3-335
- DIOD-TRK (DIOD Trunk) 3-336
- DLY-MTCE (MO-DAILY) 3-346
- DS1-BD (DS1 Interface Circuit Pack) 3-347
- DT-LN-BD (Data Line Circuit Pack) 3-419
- DTMR-PT [Dual Tone Multifrequency Port (TTR)] 3-420
- E-DIG-BD (Multi Application Platform Board) 3-425
- E-DIG-STA (Emulated Digital Line) 3-427
- EMG-XFER 3-437
- ERR-LOG (Error Log) 3-441
- ETR-PT (Enhanced Tone Receiver Port) 3-443
- EXT-DEV ADMIN? N (External Device Alarm) 3-449
- EXT-DEV ADMIN? Y (External Device Alarm) 3-452
- GPTD-PT [General Purpose Tone Detector Port (CPTR)] 3-455
- HYB-BD (Hybrid Line Circuit Pack) 3-456
- HYB-LINE (Hybrid Line) 3-457
- INADS (INADS Link) 3-478
- IO-PROCR (I/O Processor) 3-481
- ISDN-PLK (ISDN-PRI Signaling Link Port) 3-484
- ISDN-SGR (ISDN-PRI Signaling Group) 3-490
- ISDN-TRK (DS1 ISDN Trunk) 3-506
- LOG-SVN(Login Security Violation) 3-533
- JNL-PRNT (Journal Printer Link) 3-536
- MET-BD (MET Line Circuit Pack) 3-537
- MET-LINE (MET Line) 3-538
- MIS (Management Information System) 3-557

- MMI-BD 3-558
- MMI-LEV (Multimedia Interface Resource Level) 3-567
- MMI-PT 3-570
- MMI-SYNC 3-576
- OPS-LINE (DS1 OPS Line) 3-578
- PE-BCHL (PRI Endpoint Port) 3-590
- PKT-INT (Packet Interface) 3-609
- PMS-LINK (Property Management System Link) 3-618
- PMS-PRNT/JNL-PRNT (PMS Printer Link) 3-626
- PR-MAINT (Maintenance Processor) 3-632
- PR-MEM (RISC Memory) 3-646
- PRI-CDR/SEC-CDR (PRI-CDR Link) 3-653
- PROCR (RISC Processor Circuit Pack TN798) 3-660
- PROC-SAN (Process Sanity Audits) 3-667
- RING-GEN (Analog Ring Generator) 3-668
- S-SYN-BD (Speech Synthesis Circuit Pack) 3-672
- S-SYN-PT (Speech Synthesis Port) 3-673
- SEC-CDR (SEC-CDR Link Maintenance) 3-686
- SW-CTL (Switch Control) 3-687
- SYNC (Synchronization) 3-695
- SYS-LINK (System Links) 3-702
- SYS-PRNT (System Printer) 3-707
- SYSTEM (System) 3-713
- TBRI-BD (TN2185 ISDN Trunk-Side BRI) 3-715
- TBRI-PT (TN2185 ISDN Trunk-Side BRI Port) 3-723
- TBRI-TRK (TN2185 ISDN Trunk-Side BRI) 3-742
- TDMODULE (Trunk Data Module) 3-753
- TDM-BUS (TDM Bus) 3-754
- TDM-CLK (TDM Bus Clock) 3-770
- TIE-BD (Tie Trunk Circuit Pack) 3-780
- TIE-DS1 (DS1 Tie Trunk) 3-781
- TIE-TRK (Tie Trunk) 3-797
- TONE-BD (Tone-Clock Circuit Pack) 3-819

- TONE-PT (Tone Generator) 3-826
- TSC-ADM (Administered Temporary Signaling Connections) 3-834
- TTR-LEV (TTR Level) 3-840
- VC-BD 3-845
- VC-DSPPT 3-849
- VC-LEV (Voice Conditioner DSP Port Level) 3-858
- VC-SUMPT 3-861
- UDS1-BD (UDS1 Interface Circuit Pack) 3-866
- WAE-PORT (Wideband Access Endpoint Port) 3-951
- XXX-BD (Common Port Circuit Pack) 3-958

IN Index IX1

About This Document

Purpose

This book contains the information needed to monitor, test, and maintain DEFINITY® Enterprise Communications Server Release 6csi system and covers many of the faults and troubles that can occur in the system through Release 6.2. Most maintenance requirements are simple procedures due to the modular, self-testing nature of the system.

Simple, traditional troubleshooting methods are sometimes sufficient to locate and clear faults. The traditional methods include terminal substitution, visual inspections, continuity checks, and clarification of operating procedures with users.

Intended Audience

The information in this book is intended for use by:

- A maintenance technician dispatched to a DEFINITY System site in response to a trouble alarm or a user trouble report
- A maintenance technician located at a remote maintenance facility
- The user's assigned maintenance technician. The technician is expected to have a knowledge of telecommunications fundamentals and of the DEFINITY Enterprise Communications Server Release 6 Systems to the extent that the procedures in this book can be performed, in most cases, without assistance.

Each DEFINITY System has a user-designated System Manager who is responsible for system administration and with whom the maintenance technician should work closely.

This book is not intended to solve all levels of troubles. It is limited to troubles that can be solved by using the Alarm Log, Error Log, trouble-clearing procedures, maintenance tests, and traditional troubleshooting methods. If the trouble still has not been resolved, it is the responsibility of the maintenance technician to escalate the problem to a higher level of technical support. Escalation should conform to the procedures in the *Technical and Administration Escalation Plan*.

Organization

This book consists of two volumes: Volume 1 contains Chapters 1 and 2; Volume 2 contains Chapter 3.

- Chapter 1, ‘‘Maintenance for R6csi Compact Modular Cabinets’’ describes the system’s design and maintenance strategy, including circuit packs, how power is supplied to the system, the various reset and reboot processes (and how these processes are used to perform maintenance and to recover systems or subsystems that are out of service), common maintenance tasks (including removing and installing circuit packs, removing and restoring power, system backups, upgrading software, and various testing and troubleshooting procedures), and interpreting circuit pack LEDs.
- Chapter 2, ‘‘Maintenance Commands for R6csi’’ explains how to use the maintenance commands including specific command syntax, typical forms, and display output.
- Chapter 3, ‘‘Maintenance Objects for R6csi’’ has specific troubleshooting and repair instructions for every maintenance component in the system. This chapter also contains repair procedures for system-alarmed and user- reported troubles. For each Maintenance Object (MO), a table lists the alarm level, hardware error associated with the MO, the associated test that caused the error, the test sequences and the specific command line entry required to run the tests, and a brief description of each test. Explanations of error codes associated with each test are given along with specific maintenance procedures used to resolve each problem.

  The individual maintenance objects are labeled with the name of the MO exactly as the name appears in the Alarm Log; for example, MAINT (for Maintenance circuit pack). The only exception is the Common Port Circuit Pack that uses “XXX-BD” for its maintenance name. The XXX-BD section contains a set of common tests used by certain circuit packs listed in the section. The common portion of these circuit packs is the generic hardware that interfaces with the Time Division Multiplex (TDM) Bus.

Conventions Used

This document uses the following typographic conventions:

- Information you type at the management terminal is shown in the following typeface: **list system-parameters maintenance**
- Information displayed on the management terminal screen is shown in the following typeface: `login`
- Keyboard keys are shown in the following typeface: Enter.

The following conventions describe the systems referred to in this document.

- The word *system*, is a general term encompassing Release 6 and includes references to the DEFINITY Enterprise Communications Server.
- Systems in this book are called: Release 6, Release 6 CMC, and R6csi.
- Circuit pack codes (such as TN798 or TN2182B) are shown with the minimum acceptable alphabetic suffix (like the “B” in the code TN2182B).

  Generally, an alphabetic suffix higher than that shown is also acceptable. However, not every *vintage* of either the minimum suffix or a higher suffix code is necessarily acceptable.

  NOTE:
  Refer to *Technical Monthly: Reference Guide for Circuit Pack Vintages and Change Notices*, for current information about the usable vintages of specific circuit pack codes (including the suffix) in a Release 6 system.

- The term “ASAI” is synonymous with the newer CallVisor ASAI.
- Information in this document is applicable for Release 6.1, unless otherwise specified.
- DEFINITY Enterprise Communications Server is abbreviated as DEFINITY ECS.

Admonishments used in this book are as follows:

CAUTION:
This sign is used to indicate possible harm to software, possible loss of data, or possible service interruptions.

WARNING:
This sign is used where there is possible harm to hardware or equipment.

DANGER:
This sign is used to indicate possible harm or injury to people.

Safety Precautions

When performing maintenance or translation procedures on the system, users must observe certain precautions. Observe all caution, warning, and danger admonishments to prevent loss of service, possible equipment damage, and possible personal injury. In addition, the following precautions regarding electromagnetic interference (EMI) and static electricity must be observed:

Electromagnetic Interference

This equipment generates, uses, and can radiate radio frequency energy. Electromagnetic fields radiating from the switch may cause noise in the customer's equipment. If the equipment is not installed and used in accordance with the instruction book, radio interference may result.

WARNING:
To maintain the EMI integrity of the system, maintenance personnel must ensure that all cabinet panels, covers, and so forth, are firmly secured before leaving the customer's premises.

Static Electricity

To prevent or reduce electrostatic discharge (ESD), maintenance personnel must always attach wrist grounding straps before working on switch components or handling circuit packs.

CAUTION:
Electrostatic discharge can damage or destroy circuit packs containing integrated circuits (ICs).

The ESD wrist strap, cable assembly, and spare fuses are packed in a plastic bag and placed in the top of the system cabinet. Use the ESD wrist strap when troubleshooting, performing maintenance, or handling any circuit packs associated with the system.

Security Issues

A number of matters concerning maintenance are affected by security issues. For details, be sure to consult the *BCS Products Security Handbook*, 555-025-600.

CAUTION:
Login security is an attribute of the DEFINITY® Enterprise Communications Server (ECS) Release 5 software.

Standards Compliance

The equipment presented in this document complies with the following (as appropriate):

- ITU-T (Formerly CCITT)
- ECMA
- ETSI
- IPNS
- DPNSS
- National ISDN-1
- National ISDN-2
- ISO-9000
- ANSI
- FCC Part 15 and Part 68
- EN55022
- EN50081
- EN50082
- CISPR22
- Australia AS3548 (AS/NZ3548)
- Australia AS3260
- IEC 825
- IEC950
- UL 1459
- UL1950
- CSA C222 Number 225
- TS001

Electromagnetic Compatibility Standards

This product complies with and conforms to the following:

- Limits and Methods of Measurements of Radio Interference Characteristics of Information Technology Equipment, EN55022 (CISPR22), 1993
- EN50082-1, European Generic Immunity Standard
- FCC Parts 15 and 68
- Australia AS3548

NOTE:
The system conforms to Class A (industrial) equipment; voice terminals meet Class B requirements.

- Electrostatic Discharge (ESD) IEC 1000-4-2
- Radiated radio frequency field IEC 1000-4-3
- Electrical Fast Transient IEC 1000-4-4
- Lightning effects IEC 1000-4-5
- Conducted radio frequency IEC 1000-4-6
- Mains frequency magnetic field IEC 1000-4-8
- Low frequency mains disturbance

The system conforms to the following:

- Electromagnetic compatibility General Immunity Standard, part 1; residential, commercial, light industry, EN50082-1, CENELEC, 1991
- Issue 1 (1984) and Issue 2 (1992), Electrostatic discharge immunity requirements (EN55024, Part 2) IEC 1000-4-2
- Radiated radio frequency field immunity requirements IEC 1000-4-3
- Electrical fast transient/burst immunity requirements IEC 1000-4-4

European Union Standards

Lucent Technologies Business Communications Systems declares that the DEFINITY equipment specified in this document bearing the “CE” mark conforms to the European Union Electromagnetic Compatibility Directives.

The “CE” (Conformité Europeénne) mark indicates conformance to the:

- European Union Electromagnetic Compatibility Directive (89/336/EEC)
- Low Voltage Directive (73/23/EEC)

- Telecommunication Terminal Equipment (TTE) Directive (91/263/EEC)
- i-CTR3 Basic Rate Interface (BRI) and i-CTR4 Primary Rate Interface (PRI) as applicable.

The “CE” mark is applied to the following Release 6 products:

- Global AC powered Multi-Carrier Cabinet (MCC)
- DC powered Multi-Carrier Cabinet (MCC) with 25-Hz ring generator
- AC powered Single-Carrier Cabinet (SCC) with 25-Hz ring generator
- AC powered Compact Single-Carrier Cabinet (CSCC) with 25-Hz ring generator
- Enhanced DC Power System

Trademarks and Service Marks

The following are trademarks or registered trademarks of Lucent Technologies:

- 5ESS™, 4ESS™
- AUDIX®
- Callvisor®
- Callmaster®
- CentreVu™
- CONVERSANT®
- DEFINITY®
- DIMENSION®
- MERLIN®
- VOICE POWER®

The following are trademarks or registered trademarks of AT&T:

- ACCUNET®
- DATAPHONE®
- MEGACOM®
- MULTIQUEST®
- TELESEER®

The following are trademarks or registered trademarks of other companies:

- Ascend® (registered trademark of Ascend, Inc.)
- Audichron® (registered trademark of the Audichron Company)
- MS-DOS® (registered trademark of the Microsoft Corporation)

- MicroChannel® (registered trademark of IBM Systems)
- MULTIQUEST® (registered trademark of Telecommunications Service)
- PagePac® (trademark of the Dracon Division of the Harris Corporation)
- UNIX® (trademark of the Novell Corporation)

Related Documents

***DEFINITY ECS Release 6 — Installation and Test for Compact Modular Cabinets,* 555-230-128**

Provides procedures and information for hardware installation and initial testing of compact modular cabinets.

***DEFINITY ECS Release 6 — Installation for Adjuncts and Peripherals,* 555-230-125**

Provides procedures and information for hardware installation and initial testing of ECS adjunct and peripheral systems and equipment.

***BCS Products Security Handbook,* 555-025-600**

Provides information about the risks of telecommunications fraud and measures for addressing those risks and preventing unauthorized use of BCS products. This document is intended for telecommunications managers, console operators, and security organizations within companies.

Federal Communications Commission Statement

Part 68: Statement

Part 68: Answer-Supervision Signaling. Allowing this equipment to be operated in a manner that does not provide proper answer-supervision signaling is in violation of Part 68 rules. This equipment returns answer-supervision signals to the public-switched network when:

- Answered by the called station
- Answered by the attendant
- Routed to a recorded announcement that can be administered by the CPE user

This equipment returns answer-supervision signals on all DID calls forwarded back to the public-switched telephone network, with these exceptions:

- A call is unanswered

- A busy tone is received
- A reorder tone is received

This equipment is capable of providing users access to interstate providers of operator services through the use of access codes. Modification of this equipment by call aggregators to block access dialing codes is a violation of the Telephone Operator Consumers Act of 1990.

This equipment complies with Part 68 of the FCC Rules. On the rear of this equipment is a label that contains, among other information, the FCC registration number and ringer equivalence number (REN) for this equipment. If requested, this information must be provided to the telephone company. The REN is used to determine the number of devices connected to the telephone line. Excessive RENs on the telephone line may result in devices not ringing in response to an incoming call. In most, but not all areas, the sum of RENs should not exceed 5.0. To be certain of the number of devices that can be connected to a line, as determined by the total RENs, contact the local telephone company.

NOTE:
REN is not required for some types of analog or digital facilities.

Means of Connection

Connection of this equipment to the telephone network is shown in the following table.

Manufacturer's Port Identifier	FIC Code	SOC/REN/ A.S. Code	Network Jacks
Off/On Premises Station	OL13C	9.0F	RJ2GX, RJ21X, RJ11C
DID Trunk	02RV2-T	0.0B	RJ2GX, RJ21X
CO Trunk	02GS2	0.3A	RJ21X
CO Trunk	02LS2	0.3A	RJ21X
Tie Trunk	TL31M	9.0F	RJ2GX
1.544 Digital Interface	04DU9-B, C	6.0P	RJ48C, RJ48M
1.544 Digital Interface	04DU9-BN, KN	6.0P	RJ48C, RJ48M
120A2 Channel Service Unit	04DU9-DN	6.0P	RJ48C

If the terminal equipment (DEFINITY® System) causes harm to the telephone network, the telephone company may notify you in advance that temporary discontinuance of service is be required. But if advance notice is not practical, the telephone company may notify the customer as soon as possible. Also, you will be advised of your right to file a complaint with the FCC if you believe it is necessary.

The telephone company may make changes in its facilities, equipment, operations, or procedures that could affect the operation of the equipment. If this happens, the telephone company will provide advance notice so you can make the necessary modifications to maintain uninterrupted service.

If trouble is experienced with this equipment or for repair or warranty information, please contact the Technical Service Center at 1-800-248-1234. If the equipment causes harm to the telephone network, the telephone company may request that you disconnect the equipment until the problem is resolved.

It is recommended that repairs be performed by Lucent Technologies-certified technicians.

The equipment cannot be used on public coin phone service provided by the telephone company. Connection to party line service is subject to state tariffs. Contact the state public utility commission, public service commission, or corporation commission for information.

This equipment, if it uses a telephone receiver, is hearing aid compatible.

How to Order Documentation

In addition to this book, other description, installation and test, maintenance, and administration books are available. A complete list of DEFINITY books can be found in the *Business Communications System Publications Catalog*, 555-000-010.

This document and any other DEFINITY documentation can be ordered directly from the Lucent Technologies Business Communications System Publications Fulfillment Center toll free at 1-800-457-1235 (voice) and 1-800-457-1764 (fax). International customers should use 317-322-6791 (voice) and 317-322-6849 (fax).

How to Comment on This Document

Lucent Technologies welcomes your feedback. Please fill out the reader comment card found at the front of this manual and return it. Your comments are of great value and help improve our documentation.

If the reader comment card is missing, FAX your comments to 1-303-538-1741 or to your Lucent Technologies representative, and mention this document's name and number, *DEFINITY Enterprise Communication Server Release 6 Maintenance for R6csi,* 555-230-129.

Where to Call for Technical Support

Region	Phone Number
Streamlined Implementation (for missing equipment)	1-800-772-5409
Technical Service Center (INADS Database Administration)	1-800-248-1111
Asia/Pacific Regional Support Center	65-872-8686
Western Europe/South Africa/Middle East	441-252-391-889
Eastern/Central Europe	361-270-5160
Latin/Central America & Caribbean - ITAC	303-538-4666

Maintenance for R6csi Compact Modular Cabinets

1

The maintenance subsystem is a part of the software that initializes and maintains the system. The software continuously monitors system health and keeps a record of errors detected in the system. The maintenance subsystem also provides a user interface for on-demand testing. This chapter provides a brief description of the Release 6 maintenance strategy and background information on the system's overall functions.

What's new for R6.2csi

- "Offer categories" (details below)
- SoftLock, a new security software interface that replaces Lock and Key. See "Password/System Security" below for details.
- Line-side BRI through the TN556C circuit pack, which allows the R6.2csi to support implementation of nearly all DEFINITY applications:
  - Up to 7 TN556C circuit packs, each providing 12 ports conforming to the 4-wire S/T interface with multipoint capability through TDM signaling
  - BRI stations and data modules (7500/8500 series)
  - "Multimedia Call Handling (MMCH)"
  - ASAI, including PassageWay® Telephony Server and CallVisor® ASAI

Offer categories

System features are classified into two offer categories as shown in Figure 1-1:

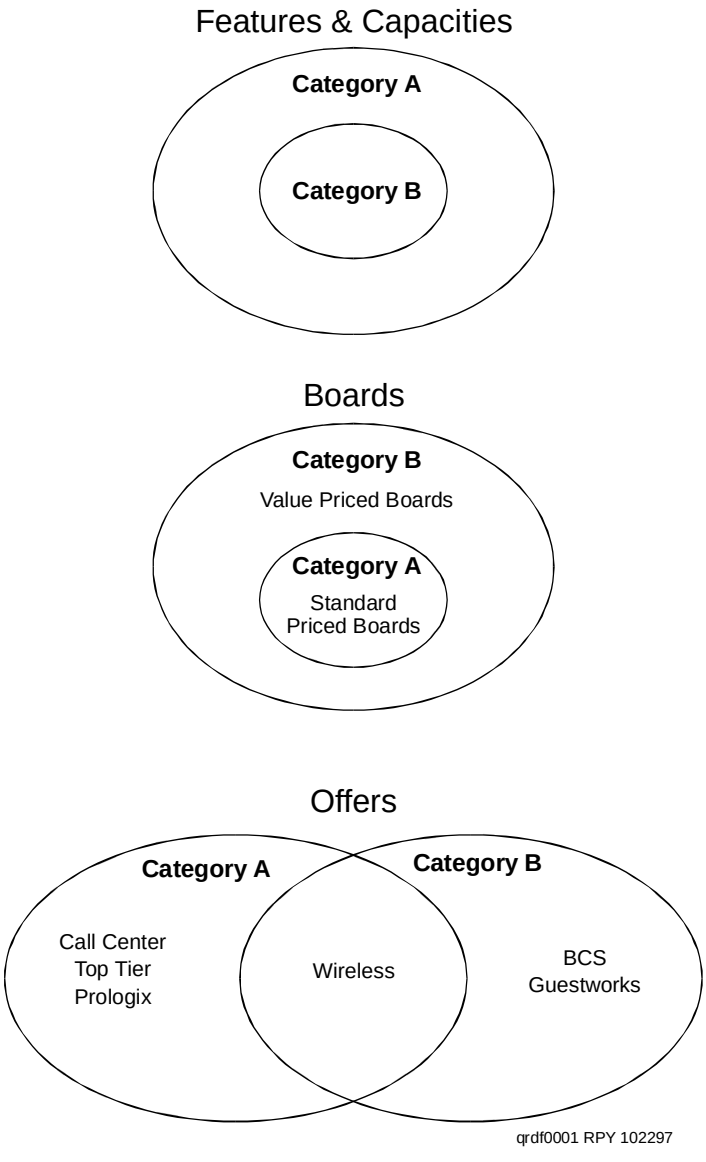

Figure 1-1. Offer categories and related hardware, features, and capacities

- **Category A** refers to top-tier offers and encompasses all current DEFINITY (including ProLogix Communications Solutions) systems.
  - All customer options allowed
  - All features allowed
  - Standard capacities
  - Standard priced hardware *only*

- **Category B** refers to the cost and efficiency configurations with either standard or value priced hardware and a reduced customer options and feature set (highlights).
  - Standard or value priced hardware:

Standard	Value	Function
TN746	TN791	16-port analog
TN2224	TN2214	24-port, 2-wire DCP
TN2183	TN2215	16-port analog

  - No ASAI
  - No CDS
  - No multimedia
  - Limited Call Center
  - No remote access
  - No extension number portability
  - Reduced capacities

The offer category along with the model determines feature "set," the allowed hardware, and the system capacities.

Offer Security

Several security considerations have been added to protect the offer categories and the associated hardware.

- Once translations for a Category A system have been entered, they cannot be changed to Category B. Migrating from Category A to Category B requires a complete retranslation of circuit packs and software.
- Standard-priced hardware is required for all Category A systems.
  - Category A allows administering value-priced hardware (for example, TN791, TN2214, and TN2215), but these boards will not function.

NOTE:
The Terranova system management software graphically represents the system configuration, including all line boards. This product must be modified to support the new valued-priced board types described above.

Initialization

At initialization, the system provides only the System-parameters Offer-option screen; all other screen forms are disabled until the offer category is both administered and activated in the system. See "Initialization and Recovery" later in this chapter for more information.

Password/System Security

DEFINITY uses two software products to secure the switch's administration and maintenance ports. While these ports help customers and technicians alike, they also provide potential access to hackers, whose activities can result in unauthorized use of network facilities and theft of long distance services.

Remote Port Security Device (RPSD)

The RPSD software works with DEFINITY ECS (prior to Release 6.2) and DEFINITY Communications Systems; System 75 (V2 or higher) and System 85; DIMENSION PBX Systems; the AUDIX, DEFINITY AUDIX, and AUDIX Voice Power Systems; and all System Management products. For details on RPSD, see the *BCS Products Security Handbook*, 555-025-600 or the *DEFINITY Communications Systems Remote Port Security Device User's Manual*, 555-025-400.

Softlock

Beginning with DEFINITY ECS Release 6.2 and higher, SoftLock (also referred to as the Integrated Lock for the Security Toolkit) can be purchased and *installed in the DEFINITY software base*. SoftLock is a centralized access interface that uses a challenge/response protocol to verify the authenticity of a user and to reduce the opportunity for unauthorized access. Topics covered in this section are:

- "Locking administered passwords"
- "Init logins"
- "INADS and craft logins"

Locking administered passwords

CAUTION:
While SoftLock is embedded in the DEFINITY ECS system, the feature is not customer-accessible until Release 6.3. This information is provided to alert technicians of the possibility of locking all administered passwords on a customer's system.

Page 2 of the Change System-parameters Customer-options form contains a `SoftLock?` field with a default of **n**, as shown in Figure 1-2. *Do not* change this field.

```
change system-parameters customer-options                       Page   2 of 4
                                OPTIONAL FEATURES

OPERATIONS SUPPORT PARAMETERS
                         ISDN-BRI trunks? n  Restrict Call Forward Off Net? y
                                ISDN-PRI? y          Secondary Data Module? y
                    ISDN-PRI over PACCON? y                      Softlock? n
                    Malicious Call Trace? n          Station and Trunk MSP? n
                     Mode Code Interface? n            Tenant Partitioning? n
                Multifrequency Signaling? y    Terminal Trans. Init. (TTI)? y
Multimedia Appl. Server Interface (MASI)? n            Time of Day Routing? n
        Multimedia Call Handling (Basic)? n           Uniform Dialing Plan? n
                                            Usage Allocation Enhancements? n
           Personal Station Access (PSA)? y
                                                     Wideband Switching? n
                                                               Wireless? n
                Processor and System MSP? n
                      Private Networking? n

      (NOTE: You must logoff and login to effect the permission changes.)
```

Figure 1-2. Change system-parameters customer-options form

WARNING:
Do not *change the* `Softlock?` *field to* ***y****, as it locks all administered passwords in the system.*

Similarly, page 2 of the Change System-parameters Security form (Figure 1-3) contains SoftLock fields that should not be changed:

```
change system-parameters security                          Page   2 of 2

                        SECURITY-RELATED SYSTEM-PARAMETERS


 SECURITY VIOLATION NOTIFICATION PARAMETERS

  SVN Station Security Code Violation Notification Enabled? n

 STATION SECURITY CODE VERIFICATION PARAMETERS

                     Minimum Station Security Code Length: 4
 Security Code for Terminal Self-Administration Required? y

 SOFTLOCK PARAMETERS

      MGR1? n         INADS? n
       EPN? n           NET? n
```

Figure 1-3. Change system parameters security form

Init logins

There are no changes to these logins for R6.2.

INADS and craft logins

There are no changes to these logins for R6.2.

Multimedia Call Handling (MMCH)

Line-side BRI through the TN556C circuit pack and a new TN2207 PRI circuit pack permitting connection to the Expansion Services Module (ESM) provide full multimedia functionality. The ESM:

- Provides T.120 data-sharing capability on a MMCH multipoint H.320 video conference.
- Requires each conference participant to have endpoints administered and a personal computer with the H.320 video application installed.
- Must be installed on the DEFINITY ECS.
- See "Expansion Services Module" later in this chapter for a schematic and connections.

R6csi design

The R6csi 10-slot Compact Modular Cabinet (CMC) has a few design features that can affect the system technician's approach to troubleshooting:

- The CMC cabinet has 2 shelves of 5 slots each (1-5, 6-10) as shown in Figure 1-4. This means that slots 5 and 6 are not contiguous like they are in other DEFINITY cabinet types and that Multi-Function boards such as the TN566 and the MAPD boards (TN800, TN801, and TN802) must be installed in specific slots. For example:
  - AUDIX, if present, requires 4 slots (slots 6-9 on the top row): the TN566 board in slot 8 with the two previous and 1 next slot reserved for AUDIX.
  - MAPD requires 2 slots if administered in slot 7, otherwise, installation requires 3 slots. See "change circuit-packs" in Chapter 2, "Maintenance Commands for R6csi" for more details.
- The TN798 Processor circuit pack incorporates the RISC processor complex, the TN777B NETCON (including PCM flash card interface), and TN765 Processor Interface functions and is always found in slot 1 of the A carrier. (See Figure 1-4)
  - The TN798 has 16 Mbytes of FLASH PROM for software text and 16 Mbytes of DRAM for translations and other data. The TN798 is the only processor circuit pack compatible in the CMC.

— The processor does not have either an amber WARNING LED nor a green ACK LED. If there is a warning, consult the alarm log with the **display alarms** command. More details on the processor LEDs can be found in the "TN798 Processor Circuit Pack LEDs" on page 1-83.

— Four administerable netcon channels are accessible through the TN798 processor and can be used for such asynchronous adjuncts as the G3 Management Terminals (SAT), Terranova family of Windows-based applications, BCMS terminals, BCMS VU, system printers, PMS links, and CDR devices.

— The TN798 has separate RS232 ports for the external modem and CDR port.

- The AC Power Supply Unit (650A) provides:

  — Multiple DC outputs: ± 5.1 VDC, -48 VDC, +8-14 VDC (fan speed control), and -150 to -115 VDC (Neon bus).

  — Three switch-selectable AC ring outputs: 85 VAC @ 20 Hz (North America), 72 VAC @ 25 Hz (international), and two 28 VAC @ 50 Hz (France).

  — For LED indicators and interpretation, see "Power Supply LEDs" on page 1-87.

- There is no battery backup in this switch. If power is interrupted for more than 50 milliseconds, all calls are dropped and memory is lost. The only remedy for maintaining service without interruptions is to have a dedicated uninterruptable power supply (UPS) between the AC source and the switch.

- The system does not support either High or Critical Reliability duplication or expansion options.

- The maximum configuration is 3 cabinets (A-C) and a total of 28 slots (2 slots are reserved for the processor and tone clock circuit packs).

- The R6csi uses an external modem for alarm reporting to INADS and remote access, rather than the built-in modem on the processor circuit pack. The U. S. Robotics Model 839 Sportster 33.6 Fax Modem is the external modem recommended for use with R6csi. This modem has a slightly different initialization string from other modems used with other DEFINITY products. Refer to the "change system-parameters maintenance" section in Chapter 2, "Maintenance Commands for R6csi" for administration and initialization details.

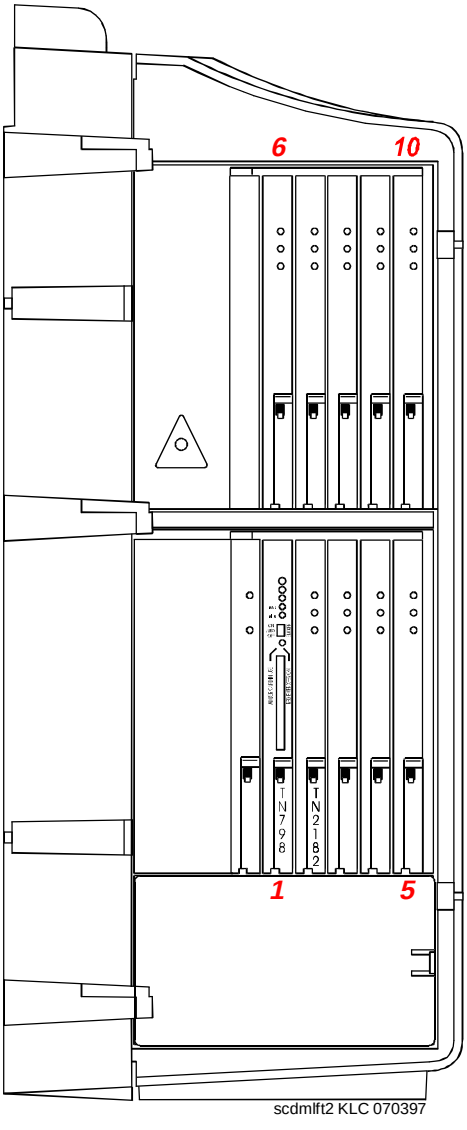

Figure 1-4. Compact Modular Cabinet (CMC) slot configuration

- The RISC-based TN798 Processor circuit pack must be located slot 1. Figure 1-4 also shows the Flash Memory Card slot for translations.
- TN2182 Tone-Clock must be installed in slot 2. This is the only Tone-Clock circuit pack allowed in the CMC.
- Service circuit packs listed in Table 1-1 are the only packs allowed in the CMC. These “universal” service packs can be located in any slot numbered 3-10.

- AUDIX, if present, requires 4 slots (slots 6-9 on the top row).
- MAPD requires 2 slots if administered in slot 7, otherwise, installation requires 3 slots.

Circuit Packs

All circuit pack slots in the Compact Modular Cabinet (CMC) are “universal slots.” That is, any slot can contain any type of circuit pack (port, control, or service), hence the absence of the purple and white slot coding found on other DEFINITY products. The only requirements for slot allocation are:

- The TN798 Processor must be installed in slot 1
- The TN2182 Tone-Clock must be installed in slot 2

NOTE:
The TN2182 is the only Tone-Clock circuit pack allowed in the CMC.

- A TN744D Call Classifier/Tone Detector circuit pack may be required in systems with heavy traffic. This circuit pack can be installed into any port, although slot 1 of Cabinet B is preferred.

Allowable Circuit Packs for CMC

Table 1-1 lists the circuit packs that can or cannot be used with the Release 6.2 version of the CMC.

Table 1-1. Circuit Packs and Circuit Modules, Release 6.2

Apparatus Code	Name	Allowable
650A	AC Power Unit	Yes
982LS	Current Limiter	No
CFY1B	Current Limiter	No
CPP1	Memory Expansion	No
ED-1E546 (TN2169) (TN2170) (TN566) (TN567)	DEFINITY AUDIX R3 System	Yes Slots 6-9

Continued on next page

Table 1-1. Circuit Packs and Circuit Modules, Release 6.2 — *Continued*

Apparatus Code	Name	Allowable
ED-1E546 (TN2208) (TN2170)	CallVisor ASAI over the DEFINITY (LAN) Gateway R1	No
J58890MP-1 (TN800)	CallVisor over the DEFINITY LAN Gateway R2	Yes
TN417	Auxiliary Trunk	Yes
TN419B	Tone-Clock	No
TN420B/C	Tone Detector	No
TN429/B	Direct Inward/Outward Dialing (DIOD) Trunk	Yes
TN433	Speech Synthesizer	Yes
TN436B	Direct Inward Dialing Trunk	Yes
TN437	Tie Trunk	Yes
TN438B	Central Office Trunk	Yes
TN439	Tie Trunk	Yes
TN447	Central Office Trunk	Yes
TN457	Speech Synthesizer	Yes
TN458	Tie Trunk	Yes
TN459B	Direct Inward Dialing Trunk	Yes
TN464C/D/E/F	DS1 Interface - T1, 24 Channel - E1, 32 Channel	Yes
TN465/B/C	Central Office Trunk	Yes
TN467	Analog Line	Yes
TN468B	Analog Line	Yes
TN479	Analog Line	Yes
TN497	Tie Trunk	Yes
TN553	Packet Data Line	No
TN556/C	ISDN-BRI 4-Wire S/T-NT Line (A-law)	Yes
TN570/B/C	Expansion Interface	No
TN572	Switch Node Clock	No
TN573/B	Switch Node Interface	No

Continued on next page

Table 1-1. Circuit Packs and Circuit Modules, Release 6.2 — *Continued*

Apparatus Code	Name	Allowable
TN574	DS1 Converter - T1, 24 Channel	No
TN577	Packet Gateway	No
TN722B	DS1 Tie Trunk	Yes
TN725B	Speech Synthesizer	Yes
TN726/B	Data Line	Yes
TN735	MET Line	Yes
TN742	Analog Line	Yes
TN744/B	Call Classifier	Yes
TN744/D	Call Classifier - Detector	Yes
TN746/B	Analog Line	Yes
TN747B	Central Office Trunk	Yes
TN748/B/C/D	Tone Detector	No
TN750/B/C	Announcement	Yes
TN753	Direct Inward Dialing Trunk	Yes
TN754/B	Digital Line 4-Wire DCP	Yes
TN755B	Neon Power Unit	No
TN756	Tone Detector	No
TN758	Pooled Modem	Yes
TN760B/C/D	Tie Trunk	Yes
TN762B	Hybrid Line	Yes
TN763B/C/D	Auxiliary Trunk	Yes
TN765	Processor Interface	No
TN767B/C/D/E	DS1 Interface - T1, 24 Channel	Yes
TN768	Tone-Clock	No
TN769	Analog Line	Yes
TN771D	Maintenance/Test	No
TN772	Duplication Interface	No
TN773	Processor	No

Continued on next page

Table 1-1. Circuit Packs and Circuit Modules, Release 6.2 — *Continued*

Apparatus Code	Name	Allowable
TN775/B	Maintenance	No
TN776	Expansion Interface	No
TN777/B	Network Control	No
TN778	Packet Control	No
TN780	Tone-Clock	No
TN786	Processor	No
TN786B	Processor	No
TN787F/G	Multimedia Interface	Yes
TN788B	Multimedia Voice Conditioner	Yes
TN789	Radio Controller	Yes
TN790	Processor	No
TN793	Analog Line, 24-Port, 2-Wire	Yes
TN796B	Processor	No
TN798	Processor	Yes
TN1648	System Access/Maintenance	No
TN1650B	Memory	No
TN1654	DS1 Converter - T1, 24 Channel/E1, 32 Channel	No
TN1655	Packet Interface	No
TN1656	Tape Drive	No
TN1657	Disk Drive	No
TN2135	Analog Line	Yes
TN2136	Digital Line 2-Wire DCP	Yes
TN2138	Central Office Trunk	Yes
TN2139	Direct Inward Dialing Trunk	Yes
TN2140/B	Tie Trunk	Yes
TN2144	Analog Line	Yes
TN2146	Direct Inward Dialing Trunk	Yes
TN2147/C	Central Office Trunk	Yes

Continued on next page

Table 1-1. Circuit Packs and Circuit Modules, Release 6.2 — *Continued*

Apparatus Code	Name	Allowable
TN2149	Analog Line	Yes
TN2180	Analog Line	Yes
TN2181	Digital Line 2-Wire DCP	Yes
TN2182B	Tone-Clock -Tone Detector and Call Classifier	Yes
TN2183	Analog Line	Yes
TN2184	DIOD Trunk	Yes
TN2185	ISDN-BRI 4-Wire S Interface (Trunk Side)	Yes
TN2198	ISDN-BRI 2-Wire U Interface	No
TN2199	Central Office Trunk	Yes
TN2202	Ring Generator	No
TN2207	IDSN-PRI Switch-resident board	Yes
TN2224	Digital Line, 24-Port, 2-Wire DCP	Yes
TN2238	ATM Trunk Interface	Yes

Maintenance Objects

The maintenance subsystem is partitioned into separate entities called Maintenance Objects (MOs). Each MO is referred to by an upper-case, mnemonic-like name that serves as an abbreviation for the MO. For example, “CO-TRK” stands for “Central Office TRunK.” Each MO is monitored by the system and has its own maintenance strategy. Although most MOs are individual circuit packs, some MOs are hardware components that reside on part of a circuit pack, for example, the TDM bus clock circuits reside on the Tone/Clock circuit pack. Other MOs, such as cabinet environmental sensors, represent larger subsystems or sets of monitors. Finally, some MOs, such as SYNChronization, represent processes or a combination of processes and hardware.

“Maintenance names” are recorded in the Error and Alarm logs. Individual copies of an MO are assigned an address that defines the MO’s physical location in the system. These locations display as the `Port` field in the Alarm and Error logs and as output of various commands such as **test board**, **busy tdm-bus**, and so forth.

Alarm and Error Reporting

During normal operations, software or firmware may detect error conditions relevant to specific MOs. The system attempts to either fix or circumvent these problems automatically. However, if a hardware component incurs too many errors, an alarm is raised. Errors are detected in two ways:

- For “in-line” errors, firmware on the component detects the occurrence of an error during ongoing operations.
- For other types of errors, a “periodic test” or a “scheduled test” started by the software detects the error. The technician can run these tests on demand by using the maintenance commands described in Chapter 2, ‘‘Maintenance Commands for R6csi’’, and the maintenance objects in Chapter 3, ‘‘Maintenance Objects for R6csi’’.

When an error is detected, the maintenance software puts the error in the Error Log and increments the error counter for that error. When an error counter is “active” (greater than zero), there is a maintenance record for the MO.

Alarms are classified depending on their effect on system operation:

— MAJOR alarms identify failures that cause a critical degradation of service. These alarms require immediate attention.

— MINOR alarms identify failures that cause some service degradation but that do not render a crucial portion of the system inoperable. MINOR alarms require attention. However, typically a MINOR alarm affects only a few trunks or stations or a single feature.

— WARNING alarms identify failures that cause no significant degradation of service or equipment failures external to the switch. These failures are not reported to INADS or to the attendant console.

— ON-BOARD problems originate in the circuitry on the alarmed circuit pack.

— OFF-BOARD problems originate in a process or component that is external to the circuit pack.

Maintenance Testing

Most troubles are reduced to the circuit pack level and can be identified by LEDs on the circuit packs and software reports generated by the system. The background maintenance tests in the system are divided into three groups:

- **Periodic** tests are usually performed hourly by maintenance software. These tests are nondestructive and can be run during high-traffic periods without interfering with calls.

- **Scheduled** tests are usually performed daily and are generally more thorough than periodic testing. These tests are considered destructive and are run only during off-hours to avoid service disruptions.
- **Fixed interval** tests are performed at regular time intervals that cannot be administered. These tests run concurrently with periodic maintenance. The following table lists the MOs that run fixed interval testing.

Maintenance Object	Interval (min)
POWER	60
SPE-SELEC	60
TDM-BUS	10
TONE-PT	10

Demand tests are also run by the system when it detects a need or by maintenance personnel in trouble-clearing activities. Using the management terminal, maintenance personnel can “demand” the same tests that the system initiates in periodic or background testing. Demand tests include periodic tests plus other tests required only when trouble occurs. Some nonperiodic demand tests are destructive (service-disrupting) tests, and are identified in boldface type.

Layers

The Open System Interconnect (OSI) model for data communications contains seven layers, each with a specific function. Communications to and through the system concern themselves only with layers 1 and 2 of the model.

Layer 1, or the *physical layer,* covers the physical interface between devices and the rules by which bits are passed. Among the physical layer protocols are RS-232, RS-449, X.21, DCP, DS1, and others.

Layer 2, or the *data-link layer*, refers to code created and interpreted by the DCE. The originating equipment can send blocks of data with the necessary codes for synchronization, error control, or flow control. With these codes, the destination equipment checks the physical-link reliability, corrects any transmission errors, and maintains the link. When a transmission reaches the destination equipment, it strips any layer-2 information the originating equipment may have inserted. The destination equipment only passes to the destination DTE equipment the information sent by the originating DTE equipment. The originating DTE equipment can also add layer-2 code to be analyzed by the destination DTE equipment. The DCE equipment treats this layer as data and passes it along to the destination DTE equipment as it would any other binary bits.

Layers 3 to 7 (and the DTE-created layer 2) are embedded in the transmission stream and are meaningful only at the destination DTE equipment. Therefore, they are shown in the figure as “user-defined,” with no state changes until the transmission stream reaches its destination.

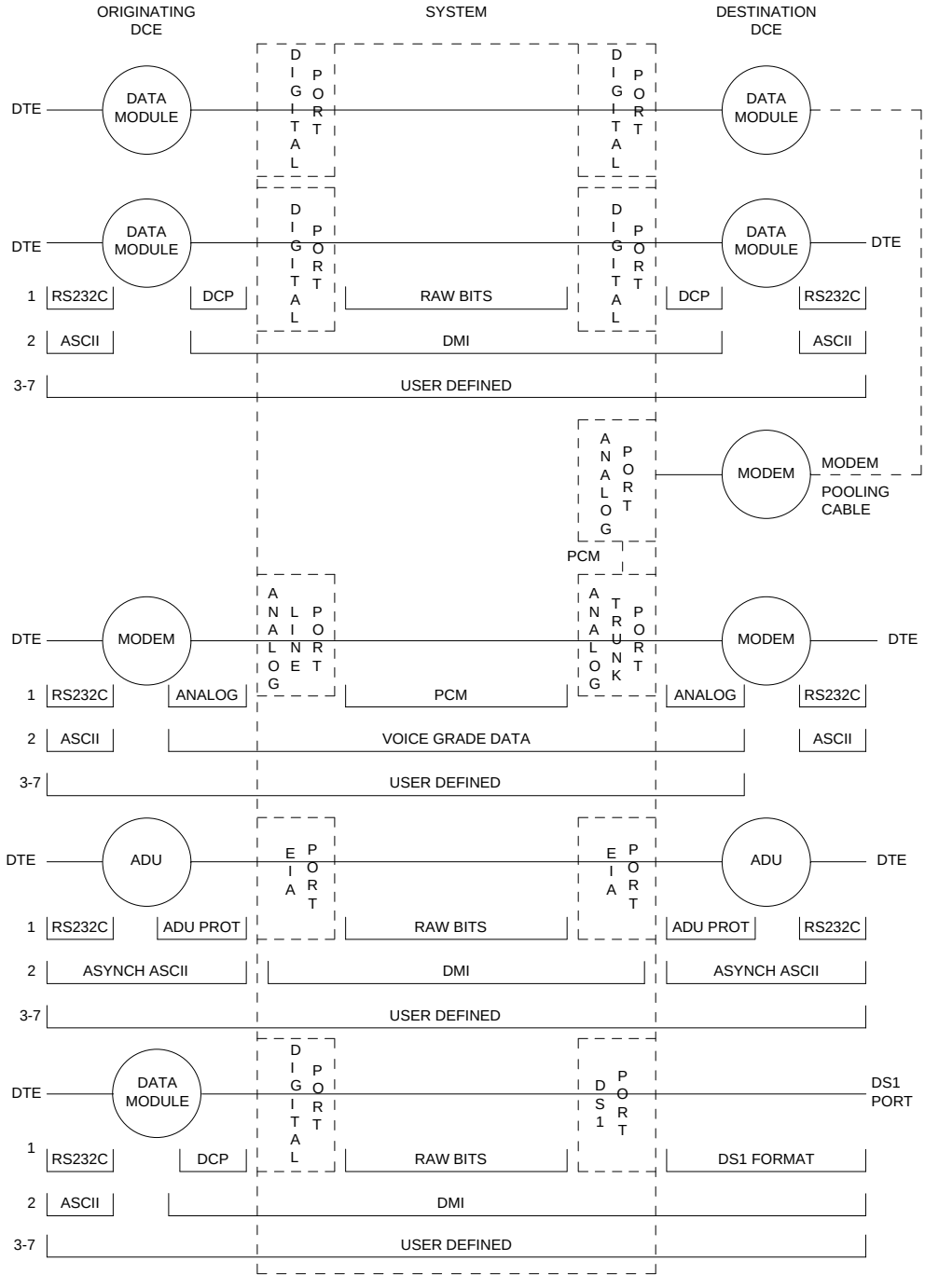

Figure 1-5. Data Transmission States

Preventive Maintenance Procedures

The following preventive maintenance procedures should be followed and logged when visiting customer sites:

Preventive Maintenance Log

The sample below shows the DEFINITY Preventive Maintenance Log. Whenever you complete any of the preventive maintenance procedures described in this section, be sure to fill in the requested information on the log form before leaving the customer's premises.

DEFINITY R6csi Preventive Maintenance Log

Date System Installed: _____

Component (Comcode)	Scheduled Date	Completed Date	Completed By	Scheduled Date	Completed Date	Completed By
Air Filter[1] (407745009)						

1. Inspect annually; see "Air Filters" below for cleaning/replacement details.

Air Filters

Air filters should be inspected annually. If a filter is dirty or clogged, first tap it on the ground. If the filter is still dirty or clogged, then wash it with warm water and a mild detergent. A vacuum cleaner can be used if one is available. If there is no facility for washing or vacuuming the air filter, then replace the filter (Comcode 407745009). Refer to "Fan and Filter Removal/Replacement" below for more information on air filters and fans.

Fan and Filter Removal/Replacement

1. Remove the left door.
2. Remove the fan/filter access panel. See Figure 1-6.

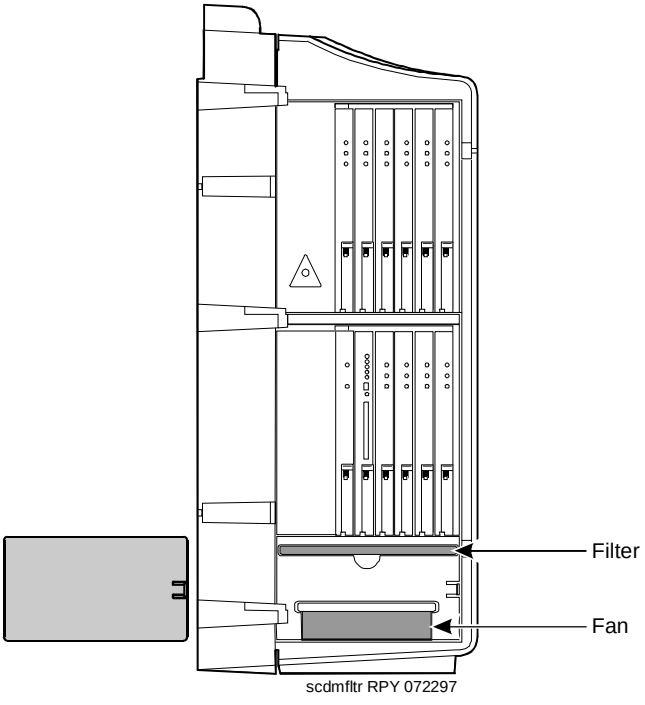

Figure 1-6. Fan/Filter Removal

Fan Assembly Removal/Replacement

1. Pull (unplug) the fan assembly from the chassis. The power for the fan automatically disconnects when the assembly is unplugged.
2. Plug in the new fan assembly. The power for the fan automatically connects when the fan assembly in plugged in.

Replace the fan/filter access panel and the left door.

Fan Filter Removal/Replacement

1. Remove the fan access panel from the left side of the cabinet.
2. Pull the fan filter from the chassis.
3. Clean (vacuum or wash with water) or replace the filter as needed and slide the filter back into the chassis.
4. Replace the fan access panel.

Initialization and Recovery

When the system is initially powered up, or when an existing system experiences a catastrophic fault that interrupts its basic functions, the system either initializes or reboots.

Initialization

Upon initialization, no forms (not even Customer Options) are available until the Offer Category is set. (The remote INADS channel is available.) To set the customer options (INADS password only), do the following:

1. Enter **change system-parameters offer-options** (init and inads logins only) and the following form displays:

```
change system-parameters offer-options

                          OFFER OPTIONS FORM

           Offer Category: _
           Activate Offer? _


WARNING: Need to save translations and reboot to make the change permanent.
```

Field descriptions

`Offer category` Type either **A** or **B**.

`Activate offer?` Type **y** if the entry for `Offer category` is correct and press Tab. Type **n** if there is an error in the `Offer category` field and press Tab. Re-enter the correct Offer Category.

2. After these two fields are filled and you press Enter, the system displays:

   `WARNING: Activating Offer Category may set unchangeable limits.`

   This is to let you know that the Offer Category along with the model determine the system capacities (limits) and allowable hardware.

3. Select the Submit option to submit the form.
4. Use the **save translations** command to make the changes permanent.

CAUTION:
To avoid potential loss of service, ensure that your system's translations are protected by saving them to the PCM/CIA card.

Recovery

There are several less severe resets available to the system that allow it to recover from disrupting errors. The user can initiate these resets by using the **reset system *n*** commands (where *n* is the reset level). These commands are used to manually restart the system at various levels, depending on the required test activity. The reset system commands are discussed below.

A system is reset due to a loss of power, or via one of the following:

- Reset commands at the administration terminal.
- Maintenance software, from which the system can reset itself. (This process starts when certain software and hardware errors are detected by the software.)

WARNING:
When the system is rebooted or reset at level 2, 3, 4, or 5, all voice terminal and attendant console features are adversely affected. Users should be advised of services that are lost and that, as a result, must be reactivated. See "Removing Power" in this chapter.

The administration terminal display and circuit pack LEDs indicate the progress of the recovery process. See "LED Interpretation" in this chapter for more information.

The sections that follow discuss successful system resets. For each level of reset, a typical administration terminal display is provided. Note that any hexadecimal numbers shown in parentheses, such as `(=8B89)`, are only examples and are subject to change.

NOTE:
If any of the diagnostic tests fail, the system may or may not function properly, and the LMM may or may not proceed with the restart. If the LMM does not proceed with the restart, the system goes into SPE-Down Mode. In failure cases, the appropriate part (for example, the Processor circuit pack) should be replaced.

NOTE:
Use and check the results of the **set/get vector** commands found in Chapter 2, "Maintenance Commands for R6csi", to determine how much time should be added for the recovery levels. Also, if an update file is applied on a system reset, add from 30 seconds to one minute to the recovery time for that reset.

Reset System 1 (System Warm Start)

This recovery takes about 30 seconds. All stable phone calls remain up. In-progress calls are dropped. No new calls can be made during this time.

In this restart, all software (Oryx/Pecos, drivers, maintenance, and so forth.) is reset and the following displays:

```
RESET 1 (WARM) PERFORMED
```

Reset System 2 (System Cold Start Without Translations Loading)

In this restart, all software (Oryx/Pecos, drivers, maintenance, and so forth) is reset. In addition, the TDM Bus and all port circuit packs are reset. All Port circuit packs are reset. All telephone sessions are dropped. Telephones begin to reconnect to the switch within 30 seconds. In a large system, reconnection of all telephones may take up to five minutes. Typical displays are:

```
INTERNAL REGISTER TEST          PASSED
LOCAL BUS TEST                  PASSED
ROM CHECKSUM TEST               PASSED
CONTROL STATUS TEST             PASSED
DCACHE TEST                     PASSED
ICACHE TEST                     PASSED
WRITE BUFFER TEST               PASSED
BTO TEST                        PASSED
TIMER TEST                      PASSED
RESET 2 (COLD_2)PERFORMED
```

Reset System 3 (System Cold Start With Translations Loading)

In this restart, all software (Oryx/Pecos, drivers, maintenance, and so forth) is reset. After the software is reset, all translations load from translation card. In addition, the TDM Bus and all port circuit packs are reset. Emergency Transfer is invoked. Translations reload from translation card. Depending on the translations, the reloading process could take from five to 30 seconds. Thereafter, all port circuit packs are reset, and all telephone sessions drop. Telephones begin to reconnect to the switch within 30 seconds. In a large system, reconnection of all telephones may take up to five minutes. Typical displays are as follows:

```
INVOKING EMERGENCY TRANSFER
INTERNAL REGISTER TEST          PASSED
LOCAL BUS TEST                  PASSED
ROM CHECKSUM TEST               PASSED
CONTROL STATUS TEST             PASSED
DCACHE TEST                     PASSED
```

```
ICACHE TEST                      PASSED
WRITE BUFFER TEST                PASSED
BTO TEST                         PASSED
TIMER TEST                       PASSED
RESET 3 (COLD_1)PERFORMED
```

Reset System 4 (System Reboot)

In this reset Emergency Transfer is invoked. The boot image is already in the flash ROM memory. The system reboots immediately after the LMM performs a series of diagnostics on the processor and memory. Translations reload from the translation card. Depending on the translation, the reloading process takes from five to 30 seconds. Thereafter, all port circuit packs are reset, and all telephone sessions drop. Telephones begin to reconnect to the switch within 30 seconds. In a large system, reconnection of all telephones may take up to five minutes. Typical displays are:

```
INVOKING EMERGENCY TRANSFER
INTERNAL REGISTER TEST           PASSED
LOCAL BUS TEST                   PASSED
ROM CHECKSUM TEST                PASSED
CONTROL STATUS TEST              PASSED
DCACHE TEST                      PASSED
ICACHE TEST                      PASSED
WRITE BUFFER TEST                PASSED
BTO TEST                         PASSED
MEM CONFIG TEST                  PASSED
MEMORY FUNCTIONAL TEST           PASSED
MEMORY MODULE A STUCK BIT TEST   PASSED
MEMORY MODULE A PARITY TEST      PASSED
MEMORY MODULE A BURST TEST       PASSED
VIRTUAL MEMORY TEST              PASSED
EXCEPTION TEST                   PASSED
TIMER TEST                       PASSED
MTP TEST                         PASSED
SANITY TIMER TEST                PASSED
ADDRESS MATCHER TEST             PASSED
FLASH TEXT CHECKSUM TEST         PASSED
DECOMPRESSING IDATA             in_cnt = 550368, out_cnt =
2080768
RAM DATA CHECKSUM TEST           PASSED
MILLISEC TIMER TEST              PASSED
IOP SHARED RAM TEST              PASSED
RESET 4 (REBOOT)PERFORMED
```

Reset System 5 (System Reboot and Run All 24-Hour Tests)

In this reset Emergency Transfer is invoked. The LMM performs a series of diagnostics on the processor, on memory, and on memory card. Some diagnostics perform twice. This takes less than three minutes. The boot image is already in the flash ROM memory. The system reboots immediately after the LMM performs a series of diagnostics on the processor and memory. Translations reload from the translation card. Depending on the translation, the reloading process takes from five to 30 seconds. Thereafter, all port circuit packs are reset, and all telephone sessions drop. Telephones begin to reconnect to the switch within 30 seconds. In a large system, reconnection of all telephones may take up to five minutes. Finally, scheduled maintenance is initiated. Typical displays are:

```
INVOKING EMERGENCY TRANSFER
INTERNAL REGISTER TEST          PASSED
LOCAL BUS TEST                  PASSED
ROM CHECKSUM TEST               PASSED
CONTROL STATUS TEST             PASSED
DCACHE TEST                     PASSED
ICACHE TEST                     PASSED
WRITE BUFFER TEST               PASSED
BTO TEST                        PASSED
MEM CONFIG TEST                 PASSED
MEMORY FUNCTIONAL TEST          PASSED
MEMORY MODULE A STUCK BIT TEST  PASSED
MEMORY MODULE A PARITY TEST     PASSED
MEMORY MODULE A BURST TEST      PASSED
MEMORY MODULE A COUPLE TEST     PASSED
VIRTUAL MEMORY TEST             PASSED
EXCEPTION TEST                  PASSED
TIMER TEST                      PASSED
MTP TEST                        PASSED
SANITY TIMER TEST               PASSED
ADDRESS MATCHER TEST            PASSED
FLASH TEXT CHECKSUM TEST        PASSED
DECOMPRESSING IDATA            in_cnt = 550368, out_cnt =
2080768
RAM DATA CHECKSUM TEST          PASSED
MILLISEC TIMER TEST             PASSED
IOP SHARED RAM TEST             PASSED
RESET 5 (EXT REBOOT)PERFORMED
```

Set Neon Voltage (Ring Ping)

NOTE:
If the ringing option is set to 50 Hz, neon voltage is not available. If 25 Hz is selected, the maximum voltage is 120 volts.

If LED message lamps are used, or there are no *neon* message waiting lamps, or if the 50-Hz ring option is selected, use this step.

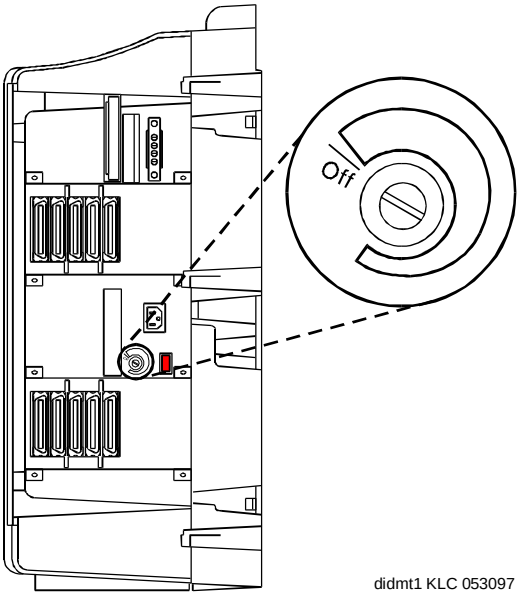

Figure 1-7. Setting the Neon Voltage

1. Call a telephone with a neon message indicator and leave a message.
2. Check for “ring ping” (single ring pulse) each time the lamp flashes (approximately every 3 seconds).
3. Adjust the neon voltage control clockwise in small increments until the ring ping stops. See Figure 1-7. Be sure that the message lamp still lights when the adjustment is finished.
4. Enter **logoff** and press Enter to logoff the system and to prevent unauthorized changes to data.
5. Set the left and right doors onto the hinge pins and close the doors. The doors must be closed to prevent EMI emissions. Tighten the door screws.
6. Set the cover panel onto the right panel and secure.

Logging On/Off

System Login Procedure

1. Verify the screen displays: `Login:`

2. Type **craft** and press Enter.
3. Verify the screen displays: `password:`
4. Type **crftpw** and press Enter. For security reasons, the password is not displayed as it is typed. The screen displays the software version.
5. Verify the screen display is similar to:

   `Terminal Type (513, 715, 4410, 4425, VT220): [513]`

6. Enter the type of management terminal and press Enter.

NOTE:
If you are logging in remotely to the R6csi, you may need to disable your local modem's error correction feature before attempting to establish connection with the switch's external modem. For most modems, the **AT\N0** ["zero"] command should disable error correction.

Forced Password Aging and Administrable Logins

Release 6 and later releases provide enhanced login/password security by adding a security feature that allows users to define their own logins/passwords and to specify a set of commands for each login. The system allows up to 11 customer logins. Each login name can be customized and must be made up of from 3 to 6 alphabetic/numeric characters, or a combination of both. A password must be from 4 to 11 characters in length and contain at least 1 alphabetic and 1 numeric symbol. Password aging is an optional feature that the super-user administering the logins can activate.

NOTE:
If several users are logging in and out at the same time, a user may see the message: `Transient command conflict detected; please try later`. After the "users" have completed logging in or out, the terminal is available for use.

The password for each login can be aged starting with the date the password was created, or changed, and continuing for a specified number of days (1 to 99). The user is notified at the login prompt, 7 days before the password expiration date, that the password is about to expire. When the password expires the user is required to enter a new password into the system before logging in. If a login is added or removed, the "Security Measurement" reports are not updated until the next hourly poll, or a **clear measurements security-violations** command is entered. Once a non-super-user has changed the password, the user must wait 24 hours to change the password again.

Security is enhanced by providing a logoff notification screen to a system administrator at log off while either the facility test call or remote access features are still administered. The administrator can be required to acknowledge the notification before completing the logoff process. Logoff notification is administered on the Login Administration screen.

Release 6 and later releases are delivered to the customer with one customer “super-user” login/password defined. The customer is required to administer additional login/passwords as needed. The super-user login has full customer permissions and can customize any login created.

Login permissions for a specified login can be set by the super-user to block any object that may compromise switch security. Up to 40 administration or maintenance objects commands can be blocked for a specified login in.

Release 6 and later commands are grouped into three command categories. Each of the three command categories has a group of command subcategories listed under them, and each command subcategory has a list of command objects that the commands acts on. A super-user can set a users permissions to restrict or block access to any command in these categories. These categories are displayed on the Command Permissions Categories form.The three main categories are:

- Common Commands
  - Display Administrative and Maintenance Data
  - System Measurements
- Administration Commands
  - Administer Stations
  - Administer Trunks
  - Additional Restrictions
  - Administer Features
  - Administer Permissions
- Maintenance Commands
  - Maintain Stations
  - Maintain Trunks
  - Maintain Systems
  - Maintain Switch Circuit Packs
  - Maintain Process Circuit Packs

If your password has expired, you see the message:

```
          Login: telmgr

        Password:
        Your Password has expired, enter a new one.

    Reenter Current Password:

                 New Password:

        Reenter New Password:
```

Figure 1-8. Password Expiration Screen

If your password is within 7 days of the expiration date, you see:

```
WARNING: Your password will expire in X days
```

To Logoff

To logoff, enter **logoff** at the command prompt. You will receive a logoff screen if any of the following is true from the list below. If either a or b is true and an acknowledgment is required, or if any of c, d, or e is true, you need to respond to the `Proceed with Logoff?` prompt on the logoff screen (default is **n**; enter **y** to override) as shown in Figure 1-9.

1. If Facility Test Call Notification has been enabled for your login (see "Adding Customer Logins and Assigning Initial Password").
2. If Remote Access Notification has been enabled for your login (see "Adding Customer Logins and Assigning Initial Password").
3. If Alarm Origination is disabled.
4. If any active major or minor alarm is active.
5. If any resource is busied out.

CAUTION:
To leave the Facility Test Call administered after you logoff poses a significant security risk that unauthorized individuals may connect to the telecommunications network through the use of test call features.

To remove the Facility Test Calls Access Code, do the following:

1. Enter **change feature-access-codes** to display the Feature Access Code screen.
2. Leave the `Facility Test Calls Access Code` field **blank**.

CAUTION:
No alarms report through the INADS interface if Alarm Origination is disabled.

CAUTION:
A busied out resource is one that is out of service. Be sure to verify if a busied resource needs to be released or if the resource should remain busied out.

```
Facility Test Call Administered
Remote Access Administered
Alarm Origination is currently disabled.
Active major or minor alarm detected; be sure to resolve it.
*** Busied out resource detected; verify if release is needed! ****

Proceed With Logoff: [n]
```

Figure 1-9. Logoff Screen

To Display a Login

1. Enter the command **display login [login name]** and press Enter.

   The system displays the requested login's:

   - Name
   - Login type
   - Service level
   - Disable following a security violation value
   - Access to INADS Port value
   - Password aging cycle length
   - Facility test call notification and acknowledgment
   - Remote access notification and acknowledgment

To List Logins

1. Enter the command **list logins**.

   The system displays the following information for all current logins:

   - Name

- Service level
- Status (active, inactive, disabled, svn-disabled, void)
- Password aging cycle length

The system displays only those logins with the same, or lower, service level as the requestor.

To Remove a Login

1. Enter the command **remove login [login name]**.

   The system displays the Login Administration form.

2. Press the Enter key to remove the login, or press Cancel to exit the remove login procedure without making a change.

To Test a Login

1. Enter your login name at the login prompt.
2. After the user enters the correct login name and password and the login is administered correctly, the system displays the command line interface.

Administering Customer Logins and Forced Password Aging

Adding Customer Logins and Assigning Initial Password

To add a customer login you must have administrative permissions:

1. Enter the **add login [name]** command to access the Login Administration form.
2. Enter your super-user password in the `Password of Login Making Change` field on the Login Administration form.

   The 3- to 6-character login name (characters 0-9, a-z, A-Z) entered with the **add login [name]** command is displayed in the Login's Name field.

3. Enter **customer** in the `Login Type` field. The system default for the `Login Type` field is "customer." The maximum number of customer logins of all types is 11.
4. Enter super-user or non-super-user in the `Service Level` field. Default is non-super-user.
   - "super-user" gives access to the **add, change, display, list,** and **remove** commands for all customer logins and passwords. The super-user can administer any mix of super-user/non-super-user logins up to a total of ten additional system logins.

- "non-super-user" permissions are limited by restrictions specified by the super-user when administering the non-super-user login. A non-super-user can change his/her password with permission set by the super-user, however once a password has been changed the non-super-user must wait 24 hours before changing the password again. A non-super-user cannot change other user passwords, login characteristics, or permissions.

5. Enter **y** in the `Disable Following a Security Violation` field to disable a login following a login security threshold violation. This field is a dynamic field and only appears on the Login Administration form when the SVN Login Violation Notification feature is enabled. The system default for the `Disable Following a Security Violation` field is **y**.
6. Enter **y** in the `Access to INADS Port?` field to allow access to the remote administration port. This field only displays if Acct. has first enabled customer super-user access to the INADS Remote Administration Port. Default is **n**.
7. Enter a password for the new login in the `Login's Password` field. A password must be from 4 to 11 characters in length and contain at least 1 alphabetic and 1 numeric symbol. Valid characters include numbers, and!&*?;'^(),.:- (the system does not echo the password to the screen as you type).
8. Re-enter the password in the `Login's Password` field. The system does not echo the password to the screen as you type.
9. Enter the number of days (1 to 99) from the current day, that you want the password to expire, in the `Password Aging Cycle Length` field. If a you enter a blank in this field, password aging does not apply to the login.
10. Decide whether or not to leave the default of yes in the `Facility Test Call Notification?` field. If **y** is selected, the user receives notification at logoff that the facility test call feature access code is administered. If you do not want the notification to appear, set the field to **n**.

CAUTION:
Leaving The facility Test Call administered after logging off poses a significant security risk.

To remove the Facility Test Calls Access Code, do the following:

a. Enter **change feature-access-codes** to display the Feature Access Code screen.
b. Leave the `Facility Test Calls Access Code` field **blank**.

11. Decide whether or not to leave the default of yes in the `Facility Test Call Notification Acknowledgment Required` field. If **y** is selected, the user is required to acknowledge that they wish to logoff while

Facility Test Call is still administered. If you do not want to force the user to acknowledge, set the field to **n**. This field appears only if the `Facility Test Call Notification` field is set to **y**.

12. Decide whether or not to leave the default of yes in the `Remote Access Notification`? field. If **y** is selected, the user receives notification at logoff that remote access is still administered. If you do not want the notification to appear, set the field to **n**.

CAUTION:
To Leave Remote Access feature administered after logging off poses a significant security risk if you are using the feature in conjunction with the Facility Test Call feature.

13. Decide whether or not to leave the default of yes in the `Remote Access Acknowledgment Required`? field. If **y** is selected, the user is required to acknowledge that they wish to logoff while remote access is still administered. If you do not want to force the user to acknowledge, set the field to **n**. This field appears only if the `Facility Test Call Notification` field is set to **y**.

```
                        LOGIN ADMINISTRATION

             Password of Login Making Change:

         LOGIN BEING ADMINISTERED
                             Login's Name:xxxxxxx
                               Login Type:
                            Service Level:
   Disable Following a Security Violation?
                     Access to INADS Port?

        LOGIN'S PASSWORD INFORMATION
                         Login's Password:
                 Reenter Login's Password:
             Password Aging Cycle Length:

      LOGOFF NOTIFICATION
        Facility Test Call Notification? y     Acknowledgment Required? y
             Remote Access Notification? y     Acknowledgment Required? y
```

Screen 1-1. Login Administration

Changing a Login's Attributes

To change a customer login's attributes you must be a super-user, have administrative permissions (specifically, the `Administration Permission` field must be set to **y** for the super-user), and:

1. Enter the **change login *name*** command to access the Login Administration form.Enter your super-user password in the `Password of Login Making Change` field on the Login Administration form. The 3- to 6-character login name (characters 0-9, a-z, A-Z) entered with the **change login *name*** command is displayed in the `Login's Name` field.
2. Enter **customer** in the `Login Type` field.
3. Enter **super-user** or **non-super-user** in the Service Level field.

   NOTE:
   You cannot change your own service level.

4. To disable a login following a login security threshold violation, enter **y** in the `Disable Following a Security Violation` field. This field is a dynamic field and only appears on the Login Administration form when the SVN Login Violation Notification feature is enabled.
5. To allow access to the remote administration port, enter **y** in the `Access to INADS Port?` field. This field will only display if Lucent Technologies has first enabled customer super-user access to the INADS Remote Administration Port.
6. Enter a password for the new login in the `Login's Password` field. A password must be from 4 to 11 characters in length and contain at least 1 alphabetic and 1 numeric symbol. Valid characters include numbers, and!&*?;'^(),.:- (the system does not echo the password to the screen as you type).
7. Re-enter the password in the `Login's Password` field. The system does not echo the password to the screen as you type.
8. Enter the number of days (1 to 99) from the current day when you wish the password to expire in the `Password Aging Cycle Length` field. If a blank is entered in this field, password aging does not apply to the login.

Administering Login Command Permissions

Users with super-user permissions can set the permissions of the logins they create. The Command Permissions Categories form displays fields to which a user with super-user permissions can give or limit access. These commands are divided into three categories:

- Common Command
- Administration Commands
- Optional Maintenance Commands

Each of the three main categories have subcategories listed under them that when set to **y** give permission to use the command sets associated with that category. When the Command Permissions Categories form is displayed for a login, the subcategories fields appear with the fields set to give the login full permissions for that login type. The super-user administering login permissions

can set any of these field to deny access to a command category for the specified login. If the super-user making the assignments has full super-user permissions and would like to limit permissions for a category, the super-user can do so by entering **y** in the `Additional Restrictions` field located under the Administration Category section of the Command Permissions Categories form.

Refer to the Command Permissions Form Entries Tables at the end of this section for a list of command Objects and Actions by:

- Display Administration and Maintenance
- Administer Features
- Administer Permissions
- Administer Stations
- Administer Trunks

The information in these tables can help you to establish command permissions for user logins.

To administer command permissions, log in as super-user and:

1. Access the Command Permissions Categories form by entering **change permissions login *login name***. When the form is displayed for a login, the default permissions for that “login type” are shown. The super-user administering the login can change a y to **n** for each subcategory field.
2. Select a category for the login and enter **y** in each field where permission to perform an administrative or maintenance action is needed. The command object you select must be within the permissions for the login type you are administering.

   If the `Maintenance` option is set to **y** on the Customer Options form, the super-user can enter **y** in the `Maintain Switch Circuit Packs?` or `Maintain Process Circuit Packs` fields.
3. A super-user with full super-user permissions (super-user administering the login cannot have the `Additional Restrictions` field set to **y** for his/her own login) can restrict additional administrative or maintenance actions for a specified login by entering **y** in the `Additional Restrictions` field on the Command Permission Categories form. Enter the additional restrictions for a login in the `Restricted` object list fields on the Command Permission Categories Restricted Object List form. You can enter up to 40 command names (object names) to block actions associated with a command category for a specified login.

```
                                                                    Page 1 of 3
                          COMMAND PERMISSION CATEGORIES
                            Login Name:
COMMON COMMANDS
               Display Admin. and Maint. Data? y
                            System Measurements? _

ADMINISTRATION COMMANDS
      Administer Stations? y             Administer Features? y
        Administer Trunks? y           Administer Permissions? y
  Additional Restrictions? n

MAINTENANCE COMMANDS
        Maintain Stations? n       Maintain Switch Circuit Packs? n
          Maintain Trunks? n      Maintain Process Circuit Packs? n
         Maintain Systems? n
```

Figure 1-10. Command Permission Categories (Page 1 of 3)

```
                                                                    Page 2 of 3

                          COMMAND PERMISSION CATEGORIES
                             RESTRICTED OBJECT LIST
              ________________________        ________________________
              ________________________        ________________________
              ________________________        ________________________
              ________________________        ________________________
              ________________________        ________________________
              ________________________        ________________________
              ________________________        ________________________
              ________________________        ________________________
              ________________________        ________________________
              ________________________        ________________________
```

Figure 1-11. Command Permissions Categories (Page 2 of 3)

```
                                                          Page 3 of 3

                    COMMAND PERMISSION CATEGORIES
                       RESTRICTED OBJECT LIST
_________________________        _________________________
_________________________        _________________________
_________________________        _________________________
_________________________        _________________________
_________________________        _________________________
_________________________        _________________________
_________________________        _________________________
_________________________        _________________________
_________________________        _________________________
_________________________        _________________________
```

Figure 1-12. Command Permissions Categories (Page 3 of 3)

Testing a Login

1. Enter your login name at the login prompt.

   After the user enters the correct login name and password and the login is administered correctly, the system displays the command line interface.

2. Turn on the administration terminal. Verify that the screen displays: `login:`

3. Enter your login name, then press Enter. Verify that the screen displays: `password:`

4. Enter your password, then press Enter.

   For security reasons, the password is not displayed as you type it. The system verifies that a valid login and password name were entered. If an invalid login or password name was entered, the screen displays:

   `login incorrect:`, and you must repeat the procedure.

   If the system recognizes the login and password name, verify that the screen displays the software version.

5. For your terminal type, complete one of the following:

   a. If the terminal is a 513 BCT, press Enter. The 513 in brackets [513] is the system default terminal.

   b. If the terminal is a 610 BCT or a 615 MT that has a 513 emulation cartridge, press Enter.

   c. If the terminal is a 610 BCT or a 615 MT that does not have a 513 emulation cartridge, enter **4410** and press Enter.

   d. If the terminal is any other of the types listed, enter the terminal type and press Enter.

6. You can deactivate INADS alarm origination whenever you log in as craft. After you supply the terminal type information requested, the system displays the following if alarm origination is activated on the Maintenance System-Parameters screen:

   NOTE:
   Unless you are in a special situation, please reduce unnecessary trouble tickets by always answering **y** to the `Suppress Alarm Origination: [y]` prompt.

   The default answer is yes. If you do NOT wish to suppress alarm origination, enter **n**. Any other entry defaults to yes. The **test inads-link** command works regardless of whether you have overridden INADS alarm origination.

7. Verify that the screen displays: `enter command:`

   You may enter the desired command, such as **display station xxxx** or press Help to obtain the list of permissible commands.

System Logoff Procedure

The system logoff procedure should be done any time the terminal is not being used. This assures that system translations are not accidentally corrupted. The **monitor system** command, when canceled, automatically causes a terminal user to be logged off and, thus, prevents unauthorized use of the terminal. Use the following procedure to log off the system:

1. Verify that the screen displays: `enter command:`
2. Enter **logoff** and press Enter. The screen displays: `login:`

If after either logging on as system technician or issuing a system technician command no additional command is issued for 30 minutes, an automatic time-out and logoff occurs. At that time, any alarms in the system previously unreported to INADS are reported. If you are logged in at two separate administration terminals, the system waits until the second terminal times out or until you log off before reporting such alarms to INADS.

Logoff Notification alerts system administrators if features that present a significant security risk are enabled. A message displays on the system administration/maintenance interface. Additionally, the user can be required to acknowledge the notification before the logoff is completed.

Procedure for SPE-Down Mode

Due to fatal hardware and software problems, it is possible for a system to go into SPE-Down Mode. In this mode, the system invokes emergency transfer and does not provide any other service. Moreover, while in this mode, the software cannot run at all. However, there are two limited interfaces to the system:

- The Processor circuit pack is responsible for maintenance and serves as interface to the system.
- The administration terminal, which connects directly to the processor, provides a very limited interface to the system. Technicians can display alarms or restart the system. Only a subset of control complex alarms displays.

The following are sample displays for SPE-Down mode and the alarms displayed.

```
**************SPE DOWN MODE*************
You can display alarms and reset system(4).
SPE_DOWN->
```

Screen 1-13 shows all possible SPE-Down alarms.

```
DISPLAY ALARMS:

     Physical    Logical    On       Alternate   Alarm       Date        Date
     Name        Name       Board?   Name        Type        Alarmed     Resolved

     ------      PROC_BD    y        -----       MAJOR       ------      ------
     ------      MEM_BD_0   y        -----       MAJOR       ------      ------
     ------      M_BUS      y        -----       MAJOR       ------      ------
     ------      MAINT*     y        -----       MAJOR       ------      ------
```

Figure 1-13. Display Alarms command

* The “MAINT” designation is used for PR-MAINT.

The first step is to determine the location of the problem. It is possible for two or more circuit packs to have failed. It is also possible for a fatal problem with one circuit pack to affect another circuit pack, especially the Processor circuit pack. All three of the following methods should be employed to determine where the fatal fault lies.

1. Use **display alarms** command:

   Issuing the **display alarms** command at the administration terminal shows where maintenance thinks the problem lies. The alarms are a good indication of why the system went down. They should be used along with the following two methods.

2. Observe red LEDs on the circuit pack to determine where software or processor firmware (LMM) had a problem.

3. Use the **reset** command:

Observe all the diagnostics on the screen, and note if the LMM has a problem with any of the diagnostics, as this information should give a good indication of where the problem lies.

The procedure to get a system out of SPE-Down mode follows.

NOTE:
This is important! If you cannot complete the first step or have problems with the maintenance interface, then the first step should be to replace the Processor circuit pack.

1. Determine which circuit pack is defective by displaying alarms and observing the red LEDs (as discussed previously).

The following general purpose maintenance procedures may be used with other repair strategies to clear system-alarmed and user-reported troubles.

Reseating/Replacing Circuit Packs

WARNING:
It is NOT recommended that you reseat circuit packs unless the documentation specifically instructs you to do so. If it is required to reseat a circuit pack, follow the instructions below which explain how to unseat, reseat, and replace circuit packs.

The procedures for unseating, reseating, and replacing control circuit packs vary depending on the system configuration. Therefore, before performing these maintenance activities, refer to the appropriate procedure below.

Control Circuit Packs

To unseat a control circuit pack:

1. Remove power from the PPN using the procedure provided in "Removing Power".
2. Slide the latch pin upward to unlock the locking lever.
3. Pull down on the locking lever until the circuit pack disconnects from its socket.
4. Pull the circuit pack just enough to break contact with the backplane connector, but do not remove it from the cabinet.

To reseat a circuit pack:

1. Push the unseated circuit pack back into the backplane connector.
2. Lift the locking lever until the pin engages.

3. Restore power to the PPN using the procedure provided in "Restoring Power"

To replace Control circuit packs:

1. Remove power from the PPN using the procedure in the "Removing Power"
1. Unseat the circuit pack.
2. Slide the circuit pack out of the slot.
3. Replace the circuit pack as per the following procedure:

NOTE:
If a new circuit pack does not correct the problem, install the original circuit pack.

To install a new circuit pack or return the original one to service:

1. Carefully insert the circuit pack and push it all the way into its mounting slot.
2. Lift the locking lever until the latch pin engages.
3. Restore power to the PPN using the procedure in "Restoring Power".
4. Verify that the circuit pack LED indications are correct.
5. Test the replaced control circuit pack by issuing the system technician commands after power has been restored.

Removing Power

When power is removed, the following features deactivate:

- Attendant Trunk Group Control
- Automatic Callback
- Call Park
- Make Busy for Direct Department Calling (DDC) and Uniform Call Distribution (UCD)

The procedures for removing power vary depending on the system configuration. Before performing these activities, refer to the following appropriate procedure.

WARNING:
Before powering down a carrier that contains DEFINITY AUDIX circuit packs (TN566), first power down the AUDIX unit to avoid damaging the AUDIX disk. Instructions for powering down this unit are in the "Power Down

AUDIX System'' section below, on the circuit pack, and in DEFINITY AUDIX documentation.

Power Down AUDIX System

A yellow caution sticker on the system's power unit notifies technicians to shut down the DEFINITY AUDIX System prior to powering down the system.

1. Long into the AUDIX System as **craft**.
2. Enter the **reset system shutdown** command. Press Enter.
3. Press Enter again to start the shutdown process.
4. The "SHUTDOWN Completed" message appears when the AUDIX is successfully shutdown. This takes about 2 minutes.
5. The AUDIX System can now be removed for service.

WARNING:
If a translation card alarm is present, or if a translation card problem is suspected, do not save translations to the translation card.

CAUTION:
Check that the *translation card is present in the TN798 Processor circuit pack.*

6. At the administration terminal, enter the **save translation** command.
7. Set the Emergency Transfer switch on the Processor circuit pack to "ON."

CAUTION:
*When removing power, Error Log information is lost. If the data is to be retained, enter the **reset system 4** command. This command restarts the system and may take several minutes. Wait for the login prompt before proceeding.*

8. To remove power from the cabinet:
   - In an AC-Powered system, turn off the power in each cabinet individually. The ON/OFF switch is located at the rear of the carrier behind the 650A Power Unit.

Restoring Power

The procedures you need to restore power depend on the system configuration. Before performing these activities, refer to the appropriate procedure. Restore power as follows:

1. Plug in power cords in port cabinets first.
2. Make sure that the translation card is properly inserted into the slot.
3. The system now goes through the rebooting process.The translations are loaded from the translation card, and rebooting takes about three minutes.
4. When system power is restored, the appropriate display is shown on the administration terminal.

   The display is the same as a **reset system 4**.
5. Reset the time using the **set time** command. Use **display time** command to verify.

Power Up the AUDIX System

- If the AUDIX was removed from the cabinet:
  1. Re-install the AUDIX and allow it to boot up automatically.
  2. Check fro SUCIX System errors.
- If the AUDIX remained in the cabinet, but power was removed from the cabinet:
  1. Power up the cabinet. The AUDIX reboots automatically.
  2. Check fro AUDIX System errors.
- If the AUDIX remained in the cabinet and the cabinet *was not* powered down:
  1. At the AUDIX console, hold the crtl key down and enter **cc**.
  2. Enter **5** at the prompt. In about 2 minuted the AUDIX boots up.
  3. When the system initialization is complete, log in as **craft**.
  4. Check for AUDIX System errors.

Replacing the Power Supply

1. Pull on the latch for the 650A Power Supply.
2. Replace the power supply and secure the latch.

System Backup

System translations can be restored by using the data on the system or on the backup translation card.

Save Translation

To ensure that the translation card contains the most recent copy of the translation data, the system can automatically save the translation data onto the translation card every 24 hours. Automatic daily backup of the system translation data is controlled by an entry in the system parameters that defaults to “daily.”

If many translation data changes are made, it is recommended that you save the translation data using the **save translation** command. This action saves the new changes to the translation card without having to wait for the next automatic daily translation backup.

NOTE:
The **save translation** command blocks all maintenance commands.

CAUTION:
It is recommended that “save translation” be performed after business hours so that dial tone delays are not encountered.

CAUTION:
Do not issue the “save translation” command when alarm conditions are present.

Translation Card Backup

In case of a power failure, the system translations can be restored using the translation card. Translation data can be saved during the daily scheduled maintenance. However, if the translation data changes frequently, translations should be saved frequently to ensure that the most up-to-date information is kept.

Note that only one translation card is provided with the system. It is recommended that the customer purchase additional translation cards to serve as backup or replacement. Translation cards should be alternated periodically.

It is also recommended that backup copies of the translation data be made weekly, or after many changes have been made to the translation data. This minimizes the loss of recent translation data changes if the translation card in the system becomes damaged.

Save announcements

Enter the **save announcements** command to save the recorded announcements in the system on the translation card.

NOTE:
This command is not necessary for the TN750C Announcement circuit pack.

NOTE:
A 10 MByte or larger translation card formatted for announcements (and/or translations) is required to save and restore announcements. For more information on formatting the translation card, see ''format card-mem'' in Chapter 2, ''Maintenance Commands for R6csi''.

The system takes about 40 minutes to complete this task. Because the terminal is unavailable during this time, it is recommended that this command be used after business hours. During this time period, the terminal cannot be used to administer the system until the save is complete; however, all other terminals (if provided) are allowed to perform administration procedures.

Enter the **restore announcements** command to restore the recorded announcements from the translation card back into system memory. The system takes about 40 minutes to complete this task. After completing the task, the system performs an audit to make sure that the announcements on the announcement circuit pack match the announcements administered in the system.

The working copy of the announcements is stored on the announcement circuit pack. A backup copy should be made on a 10 MByte or larger translation card. The following procedure is used to make a backup translation card:

1. Remove the translation card from the Processor circuit pack.
2. Insert the backup translation card into the Processor circuit pack.
3. Enter the **save announcement** command and press Enter. This instructs the system to take all announcement information in memory and transfer it to the translation card. When finished, the following display appears:

```
 save translation
                                SAVE TRANSLATION

Processor                        Command Completion Status        Error Code

SPE-A                            Success                          0

Command successfully completed

Command:
```

Figure 1-14. Save Translation screen

4. Verify that the command successfully completes. If not, an error message appears. In such a case, refer to the “Translation Card Errors” section.
5. If the system is equipped with a TN750 Announcement circuit pack, the recorded announcements can be saved using the **save announcement** commands. Enter the command and press Enter. The following display appears:

```
save announcements

                              SAVE ANNOUNCEMENTS


Processor                        Command Completion Status      Error Code

SPE-A                            Success                        0


Command successfully completed


Command:
```

Figure 1-15. Save Announcements screen

6. Verify that the command successfully completes. If not, an error message appears. In such a case, refer to the ‘‘Translation Card Errors’’ section that follows.
7. Remove the backup translation card and insert the original translation card.
8. Label the backup translation card with the date and time it was updated. A special notation on the card clearly distinguishes it from other cards.
9. Store the backup translation card in a secure place.

Translation Card Errors

Translation card-related failures may occur for two reasons: the card is at fault, or the Processor circuit pack is at fault. The following is a list of the error messages and recommended responses to each.

1. `Cannot access file storage area`—Implies that the wrong translation card may be installed.

   Response: Check to see which translation card is installed. If the correct one is installed, test it by using the **test card-mem** command.

2. `Cannot turn on 12 volt power supply`—Implies that something may be wrong with the Processor circuit pack, which contains the power supply.

Response: Test the 12-volt power supply by entering the **test card-mem** command from the terminal. Executing this command causes the system to run Test 701 (12 Volt Power Supply Test). If the power supply test fails, replace the Processor circuit pack. Then repeat whichever command failed.

3. `Invalid directory on Card-Mem` — The translation card needs refreshing. Run **test card-mem** and be sure all tests pass.
4. `Card-Mem is unusable` — Something is wrong with the translation card. Replace the translation card.
5. `Could not write to Card-Mem` — Something is wrong with the translation card. Test the translation card.
6. `Request is incompatible with currently running operations` — The storage system is in use. Try again later.
7. `Card-Mem is not inserted in the system` — Insert the translation card.
8. `Cannot access file; wrong type of Card-Mem is inserted` — The correct translation card for the desired operation has not been inserted. Load the appropriate translation card.
9. `File size exceeded` — There is no more file space. Call your Lucent Technologies representative.
10. `Upgrade Memory Card inserted` — The system upgrade translation card may have been inserted instead of the translations card. Insert the translation card.
11. `Card-Mem is write-protected` — The switch on the top side of the translation card is incorrectly set. Move the switch to the down position.
12. `Transmission problem; please try later` — There is a problem communicating with the announcement circuit pack. Check to see that the announcement circuit pack has been correctly administered. Use the **change *data extension-number*** command. Verify that the announcement circuit pack is in the correct slot in the processor. If so, wait and retry.
13. `Command has been aborted; please try later` — The command was pre-empted. Try again later.
14. `Saved copy of translations is unusable` — The copy of the translations on your translation card is faulty. Re-enter the **save translation** command.

Troubleshooting Features

In addition to the various maintenance and test commands that are available, the following system features may also be useful in troubleshooting certain system resources:

- ''Automatic Circuit Assurance''

- "Busy Verification of Terminals and Trunks"
- "Trunk Group Busy/Warning Indicators to Attendant"
- "Trunk Identification by Attendant"
- "Facility Test Calls"
- "Analog Tie Trunk Back-to-Back Testing"
- "Terminating Trunk Transmission Testing"
- "Troubleshooting ISDN-PRI Problems"
- "Troubleshooting PRI Endpoint Problems"
- "Troubleshooting ISDN-PRI Test Call Problems"

Automatic Circuit Assurance

A display-equipped voice terminal (may be nondisplay type if the Voice Message Retrieval feature is provided) or an attendant console is required. An "ACA activate/deactivate" button (one per system) is required on the voice terminal or attendant console.

Automatic Circuit Assurance (ACA) assists users in identifying possible trunk malfunctions. The system maintains a record of the performance of individual trunks relative to short and long holding time calls. The system automatically initiates a referral call to an attendant console or display-equipped voice terminal when a possible failure is detected.

Holding time is the elapsed time from when a trunk is accessed to the time a trunk is released. When ACA is enabled through administration, the system measures the holding time of each call.

A short holding time limit and a long holding time limit are preset by the System Manager for each trunk group. The short holding time limit can be from 0 to 160 seconds. The long holding time limit can be from 0 to 10 hours. The measured holding time for each call is compared to the preset limits for the trunk group being used.

Measurements are not made on personal CO lines, out-of-service trunks, or trunks undergoing maintenance testing.

Busy Verification of Terminals and Trunks

A multi-appearance voice terminal or attendant console equipped with a "verify" button is required.

Busy Verification of Terminals and Trunks allows a user at a voice terminal or attendant console to make test calls to trunks, voice terminals, and hunt groups (DDC/UCD). These test calls check the status of an apparently busy resource.

This provides an easy method to distinguish between a voice terminal or resource that is truly busy and one that only appears busy because of a trouble condition.

Trunk Group Busy/Warning Indicators to Attendant

An attendant console is required.

Trunk Group Busy/Warning Indicators to Attendant provides the console user with a visual indication of the trunk group status for each trunk group associated with the 12 Trunk Group Select buttons located on the console. Trunk groups with busy indications during nonbusy periods should be checked to ensure that the trunks are busy and not out-of-service. Use the Busy Verification of Terminals and Trunks feature to test the suspected faulty trunks.

Trunk Identification by Attendant

A display-equipped voice terminal or an attendant console equipped with a “trunk id” button is required.

Trunk Identification by Attendant allows a voice terminal or attendant console user to identify a specific trunk being used on a call. This is useful when a user experiences noise or poor transmission on a trunk call. The trunk identification (access code and group number) is displayed when the “trunk id” button is pressed while on a trunk call. Use of this feature is denied if there are more than two trunks on a call. If the call is trunk-to-trunk, the identification displayed is of the last trunk added to the call.

Facility Test Calls

The Facility Test Calls feature provides a voice terminal user the capability of placing test calls to access specific trunks, touch-tone (DTMF) receivers, time slots, and system tones. The test call can be made by a local voice terminal user by dialing an access code.

NOTE:
For the ISDN-PRI Test Call feature, see “Troubleshooting the Outgoing ISDN-Testcall Command” later in this chapter.

The following Facility Test Calls are described below:

- “Trunk Test Call”
- “Touch-tone (DTMF) Receiver Test Call”
- “Time Slot Test Call”
- “System Tone Test Call”

Trunk Test Call

The trunk test call accesses specific Tie or CO trunks. DID trunks cannot be accessed.

To place a call:

1. Dial the Facility Test Call Feature Access Code (for example, 197, see Note), and listen for dial tone.

   NOTE:
   The Facility Test Call Access Code (FAC) is administered on the Feature Access Codes Form. The 197 FAC code used here is an example.

2. Dial the 6-digit port number **PCSSpp**

P	=	Port network number (1)
C	=	Carrier number (A=1, B=2, C=3)
SS	=	Slot number (01-10)
pp	=	Port number

   The channels on a DS1 trunk are addressed by using the channel number for the port number.

3. Listen for one of the following tones:

   - Dial Tone or Silence—trunk is connected. Go to Step 4. If you hear a dial tone, it is coming from the far end. If the far end has been disabled, you do not hear dial tone. However, depending on far-end administration, you may still be able to dial digits. All digits dialed after the port number are transmitted using end-to-end DTMF signaling; therefore, if the trunk being tested is a rotary trunk, it is not possible to break dial tone.
   - Reorder Tone—trunk is busy or maintenance busy.
   - Intercept Tone— a trunk or touch-tone (DTMF) receiver has not been accessed.

4. Place a call. Even if you do not hear a dial tone, you may still be able to dial digits, depending on the administration of the far-end switch.

   All digits dialed after the port number are transmitted using end-to-end DTMF signaling; therefore, if the trunk being tested is a rotary trunk, it is not possible to break dial tone.

   If the call does not go through (that is, no ringing), determine if the trunk circuit pack has been removed.

CAUTION:
To leave the Facility Test Call administered after you logoff poses a significant security risk that unauthorized individuals may connect to the telecommunications network through the use of test call features.

To remove the Facility Test Calls Access Code, do the following:

a. Enter **change feature-access-codes** to display the Feature Access Code screen.

b. Leave the `Facility Test Calls Access Code` field **blank**.

Touch-tone (DTMF) Receiver Test Call

The touch-tone (DTMF) receiver call accesses and tests the four touch-tone (DTMF) receivers located on the TN744D Tone Detector circuit pack. To place the call:

1. Dial the Facility Test Call Feature Access Code (for example, 197, see Note), and listen for dial tone.

   NOTE:
   The Feature Access Code (FAC) is administered on the Feature Access Codes Form. The 197 FAC code used here is an example.

2. Dial the 6-digit port number **PCSSpp**:

P	=	Port network number (1)
C	=	Carrier number (A=1, B=2, C=3)
SS	=	Slot number (01-10)
pp	=	Touch-tone (DTMF) Receiver Port number (01, 02, 05, or 06)

3. Listen for one of the following tones:
   - Confirmation Tone—touch-tone (DTMF) receiver is connected. Go to Step 4.
   - Reorder Tone—touch-tone (DTMF) receiver is busy.
   - Intercept Tone—a touch-tone (DTMF) receiver or trunk has not been accessed.

4. Dial **1234567890*#** and listen for Confirmation tone (test passed) or intercept tone (test failed). The test fails if the touch-tone (DTMF) receiver does not recognize all the touch-tone (DTMF) signals.

5. To test another touch-tone (DTMF) receiver, repeat Steps 2 through 4.

6. To terminate the test call, hang up the station set used for testing.

Time Slot Test Call

The time slot test call connects the voice terminal user to a specific time slot located on the TDM Buses (A or B) or out-of-service time slots. Specific Time Slots To place the call:

1. Dial the Facility Test Call Feature Access Code (for example, 197, see Note), and listen for dial tone.

   NOTE:
   The Feature Access Code (FAC) is administered on the Feature Access Codes Form. The 197 FAC code used here is an example.

2. Dial port network number (1), then press # and the 3-digit time slot number "sixty," where:

   xxx = Time slot number (000 through 255 on Bus A and 256 through 511 on Bus B)

3. Listen for one of the following tones:
   - Confirmation Tone—time slot is idle or maintenance busy
   - Reorder Tone—time slot is busy
   - Dedicated Tone—One of the following tones is heard (see Table 1-2)

Table 1-2. TDM Bus Time Slot Numbers

TDM Bus A time slot	TDM Bus B time slot	Tone Heard
000	256	Reorder
001	257	Reorder
002	258	Reorder
003	259	Reorder
004	260	Reorder
005	261	Touch Tone 1 - 697Hz
006	262	Touch Tone 2 - 770 Hz
007	263	Touch Tone 3 - 852Hz
008	264	Touch Tone 4 - 941 Hz
009	265	Touch Tone 5 - 1209 Hz
010	266	Touch Tone 6 - 1336Hz
011	267	Touch Tone 7 - 1447 Hz

Continued on next page

Table 1-2. TDM Bus Time Slot Numbers — *Continued*

TDM Bus A time slot	TDM Bus B time slot	Tone Heard
012	268	Touch Tone 8 - 1633 Hz
013	269	Dial Tone
014	270	Reorder Tone
015	271	Alert Tone
016	272	Busy Tone
017	273	Ringback Tone
018	274	Special Ringback Tone
019	275	2225 Hz Tone
020	276	Music
021	277	Tone on Hold
022-253	278-509	Confirmation (used for calls)
254	510	Reorder
255	511	Confirmation

Out-of-Service Time Slots to place the call:

1. Dial the Facility Test Call Feature Access Code (for instance, 197, see Note), and listen for dial tone.

   NOTE:
   The Feature Access Code (FAC) is administered on the Feature Access Codes Form. The 197 FAC code used here is an example.

2. Dial port network number (1), then dial ****** and listen for the following tones:
   - Confirmation Tone—Connection is made. Go to Step 3.
   - Reorder Tone—No time slots are out-of-service.
3. Repeat from Step 1 to alternate between out-of-service time slots on TDM Bus A and B.

System Tone Test Call

The system tone test call connects the voice terminal user to a specific system tone. To place the call:

1. Dial the Facility Test Call Feature Access Code (for instance, 197, see Note), and listen for dial tone.

NOTE:
The Facility Test Call Access Code (FAC) is administered on the Feature Access Codes Form. The 197 FAC code used here is an example.

2. Dial port network number (1), then dial *, followed by the two-digit tone identification number listed in Table 1-3.

NOTE:
For a definition of Call Progress Tones see *DEFINITY Enterprise Communications Server Release 6 Administration and Feature Description*.

Table 1-3. System Tone Identification Numbers

Number	Description
00	Null tone
01	Dial tone
02	Reorder tone
03	Alert tone
04	Busy tone
05	Recall dial tone
06	Confirmation tone
07	Internal call waiting tone
08	Ringback tone
09	Special ringback tone
10	Dedicated ringback tone
11	Dedicated special ringback tone
12	Touch tone 1
13	Touch tone 2
14	Touch tone 3
15	Touch tone 4
16	Touch tone 5
17	Touch tone 6
18	Touch tone 7

Continued on next page

Table 1-3. System Tone Identification Numbers — *Continued*

Number	Description
19	Touch tone 8
20	Chime
21	350 Hz
22	440 Hz
23	480 Hz
24	620 Hz
25	2025 Hz
26	2225 Hz
27	Counter
28	External call waiting
29	Priority call waiting
30	Busy verification
31	Executive override/intrusion tone
32	Incoming call identification
33	Dial zero
34	Attendant transfer
35	Test calls
36	Recall on don't answer
37	Audible ring
38	Camp-on recall
39	Camp-on confirmation
40	Hold recall
41	Hold confirmation
42	Zip tone
43	2804 Hz
44	1004 Hz (-16dB)
45	1004 Hz (0 dB)
46	404 Hz
47	Transmission test sequence 105
48	Redirect tone

Continued on next page

Table 1-3. System Tone Identification Numbers — *Continued*

Number	Description
49	Voice signaling tone
50	Digital milliwatt
51	440 Hz + 480 Hz
52	Music
53	Transmission test sequence 100
54	Transmission test sequence 102
55	Laboratory test tone 1
56	Laboratory test tone 2
57	Disable echo supervision dial tone
58	7 seconds of answer tone
59	4 seconds of answer tone
60	Restore music (or silence)
61	Warning tone
62	Forced music tone
63	Zip tone (first of 2 sent)
64	Incoming call ID (first of 2 sent)
65	Tone on hold
66	CO dial tone
67	Repetitive confirmation tone
68	Conference/bridging tone

Analog Tie Trunk Back-to-Back Testing

The TN760B circuit pack can be configured for back-to-back testing (also known as connectivity testing) by making translation and cross-connect changes. This testing configuration allows for the connection of Tie Trunks back-to-back in the same switch to verify the operation of Tie Trunk ports. The tests can be performed in either the E & M or simplex modes.

E & M Mode Test Procedure

The procedures to perform the Analog Tie Trunk port test in the E & M mode are as follows:

1. At the administration terminal, enter **list configuration trunks** command to determine which ports are assigned on the Tie Trunk circuit pack.
2. Enter **display dialplan** command to determine the Trunk Access Code (TAC) format.
3. Enter **display port xx** command for all ports defined in Step 1. This action displays the trunk groups to which the ports belong (that is, of which the ports are members).

   NOTE:
   See the "Control Circuit Packs" section in this chapter for details on how to remove and replace port circuit packs.

4. Insert the circuit pack back into the slot.
5. Enter **display trunk xx p** command for each trunk group identified in Step 3. This command displays the specified trunk group on the administration terminal screen and prints a hard copy on the printer. Save this data for later use.
6. Remove all members defined by these ports from the trunk group(s) using the **ch trunk xx** command.
7. Remove the Tie Trunk circuit pack from the carrier slot.
8. Set the dip (option) switches for each of the two ports to be tested on the Tie Trunk circuit pack to "E & M mode" and "unprotected."
9. Enter **add trunk n** command to add a new (test) trunk group. Then enter the following information:
   - Group Type — tie
   - TAC — (use trunk access code obtained from dial plan)
   - Trunk Type (in/out) — wink/wink
   - Port — assign two of the ports from the tie trunk
   - Mode — E & M
   - Type — specify one port as t1 standard and other port as t1 compatible

   Examples of the Trunk Group forms are shown in Figure 1-16 and Figure 1-17.

```
display trunk-group 10                                          Page  1 of  5

                                 TRUNK GROUP

Group Number: 10                   Group Type: tie           CDR Reports? y
  Group Name: tr 10                       COR: 1                     TAC: 110
   Direction: two-way        Outgoing Display? n        Data Restriction? n
MIS Measured? n
 Dial Access? y                Busy Threshold: 60           Night Service:
Queue Length: 0                Internal Alert? n     Incoming Destination:
   Comm Type: voice                 Auth Code? n


TRUNK PARAMETERS

   Trunk Type (in/out): wink/wink        Incoming Rotary Timeout(sec): 5
    Outgoing Dial Type: tone                       Incoming Dial Type: tone
                                         Disconnect Timing(msec): 500
       Digit Treatment:                                       Digits:
          Used for DCS? n
        ACA Assignment? n

                  Baud Rate: 1200     Synchronization: async   Duplex: full
         Incoming Dial Tone? y                     Maintenance Tests? y
 Answer Supervision Timeout:                     Suppress # Outpulsing? n
```

Figure 1-16. Trunk Group Form

```
                                                          Page  2 of  5

                                TRUNK GROUP


GROUP MEMBER ASSIGNMENTS


                 Port       Name          Mode          Type     Answer Delay

              1: B1901                    E & M         t1 stan
              2: B1902                    E & M         t1 comp
              3:
              4:
              5:
              6:
              7:
              8:
              9:
             10:
             11:
             12:
             13:
             14:
             15:
```

Figure 1-17. Trunk Group Form — E & M Mode (Page 2 of 2)

10. Locate the Tie Trunk port terminal connections at the cross-connect field. See Table 1-4.

Table 1-4. Carrier Lead Appearances at 110 Cross-Connect Field

110 Connecting Block Terminals	CO Trunk TN747B	Tie Trunk TN760B
1	T1	T1
2	R1	R1
3		T11
4		R11
5		E1
6		M1
7	T2	T2
8	R2	R2
9		T12

Continued on next page

Table 1-4. Carrier Lead Appearances at 110 Cross-Connect Field — *Continued*

110 Connecting Block Terminals	CO Trunk TN747B	Tie Trunk TN760B
10		R12
11		E2
12		M2
13	T3	T3
14	R3	R3
15		T13
16		R13
17		E3
18		M3
19	T4	T4
20	R4	R4
21		T14
22		R14
23		E4
24		M4
25	T5	
26	R5	
27		
28		
29		
30		
31	T6	
32	R6	
32		
33		
34		
36		
37	T7	
38	R7	

Continued on next page

Table 1-4. Carrier Lead Appearances at 110 Cross-Connect Field — *Continued*

110 Connecting Block Terminals	CO Trunk TN747B	Tie Trunk TN760B
39		
40		
41		
42		
43	T8	
44	R8	
45		
46		
47		
48		
49		
50		

11. At the cross-connect field, disconnect outside trunk facilities from the Tie Trunk ports and mark the disconnected wires for later reconnecting the Tie Trunk ports back to normal operation. The D Impact Tool (AT-8762) is required to perform this step.
12. Use jumper wires (DT 24M-Y/BL/R/G and DT 24P-W/BRN) and the D Impact Tool to connect wiring between the two ports assigned in Step 9 at the cross-connect field. For example, if the two ports on the Analog Tie Trunk circuit pack are port 1 and 2, connect the wirings as shown below:

```
Port   1                                   Port   2

T1   ------------------------------------  T12
R1   ------------------------------------  R12
T11  ------------------------------------  T2
R11  ------------------------------------  R2
E1   ------------------------------------  M2
M1   ------------------------------------  E2

t1   stan                                  t1   comp
E&M                                        E&M
```

13. Check all wiring to verify good connections between the two test ports.

14. Place a call from one voice terminal to another voice terminal using the Tie Trunk ports assigned. Dial TAC and extension. For example, if TAC of Tie Trunk group is 110 and station number is 5012, then dial 110 5012. If the call cannot be made, either one of these ports could be defective. There are four ports on TN760B (port 1, 2, 3, and 4), try different combinations to determine defective ports.
15. If there is a defective port on the circuit pack, try to switch to an unused port. However, if all ports are normally used, then replace the circuit pack.
16. Disconnect the jumpers between two ports. Then use administration terminal and trunk printouts to restore all trunk group changes to normal values.

Analog Tie Trunk Port Test Procedure

The procedures to perform the Analog Tie Trunk Port Test in the simplex mode are as follows:

1. Repeat Steps 1 through 7 of the E & M Mode Test Procedure.
2. Set the dip (option) switches for each of the two ports to be tested on the Tie Trunk circuit pack to simplex mode.
3. Enter **add trunk n** command to add a new (test) trunk group. Then enter the following information:
   - Group Type — tie
   - TAC — (use trunk access code obtained from dial plan)
   - Trunk Type (in/out) — wink/wink
   - Port — assign two of the ports from the tie trunk
   - Mode — simplex
   - Type — type 5

   An example of the Trunk Group Form Page 2 is shown in Figure 1-18.

```
                                                          Page  2 of  5

                                TRUNK GROUP


GROUP MEMBER ASSIGNMENTS


                 Port      Name         Mode         Type    Answer Delay

              1: B1901                  simplex      type 5
              2: B1902                  simplex      type 5
              3:
              4:
              5:
              6:
              7:
              8:
              9:
             10:
             11:
             12:
             13:
             14:
             15:
```

Figure 1-18. Trunk Group Form — Simplex Mode (Page 2 of 5)

4. Locate the Tie Trunk port terminal connections at the cross-connect field. See Table 1-4.
5. At the cross-connect field, disconnect outside trunk facilities from the Analog Tie Trunk ports and mark the disconnected wires for later when the Tie Trunk ports are placed back into normal operation. The D Impact Tool (AT-8762) is required to perform this step.
6. Use jumper wires (DT 24M-Y/BL/R/G) and the D Impact Tool to connect wiring between the two ports assigned in Step 4 at the cross-connect field. For example, if the two ports on the Analog Tie Trunk circuit pack are ports 1 and 2, connect the wirings as shown below:

Port 1		Port 2
T1	———	T12
R1	———	R12
T11	———	T2
R11	———	R2
type 5 simplex		type 5 simplex

7. Repeat Steps 13 through 16 of the E & M Mode Test Procedure.

Terminating Trunk Transmission Testing

The Terminating Trunk Transmission (TTT) (noninteractive) feature provides for extension number access to three tone sequences that can be used for trunk transmission testing from the far end of the trunks.

The three test types should have extension numbers assigned on the Maintenance-Related System Parameters Form.

Test Type 100:_____ Test Type 102:_____ Test Type 105:_____

Test Type 100 provides:

1. 5.5 seconds of 1004 Hz tone at 0dB
2. Quiet until disconnect; disconnect is forced after one minute

Test Type 102 provides:

1. 9 seconds of 1004 Hz tone at 0dB
2. 1 second of quiet
3. This cycle is repeated until disconnect; disconnect is forced after 24 hours.

Test Type 105 provides:

1. nine seconds of 1004 Hz at -16dB
2. one second of quiet
3. nine seconds of 404 Hz at -16dB
4. one second of quiet
5. nine seconds of 2804 Hz at -16dB
6. 30 seconds of quiet
7. one half second of Test Progress Tone (2225 Hz)
8. approximately five seconds of quiet
9. forced disconnect

Troubleshooting ISDN-PRI Problems

The following flowchart, Figure 1-19 and Figure 1-20, defines a layered approach when troubleshooting ISDN-PRI problems. Since a problem at a lower layer affects upper layers, layers are investigated from low to high. In the flowchart, the DS1 facility is layer 1, the TN765 Processor Interface is layer 2, and the ISDN trunks are layer 3. Transient problems are diagnosed on Page 2 of the flowchart, Figure 1-20.

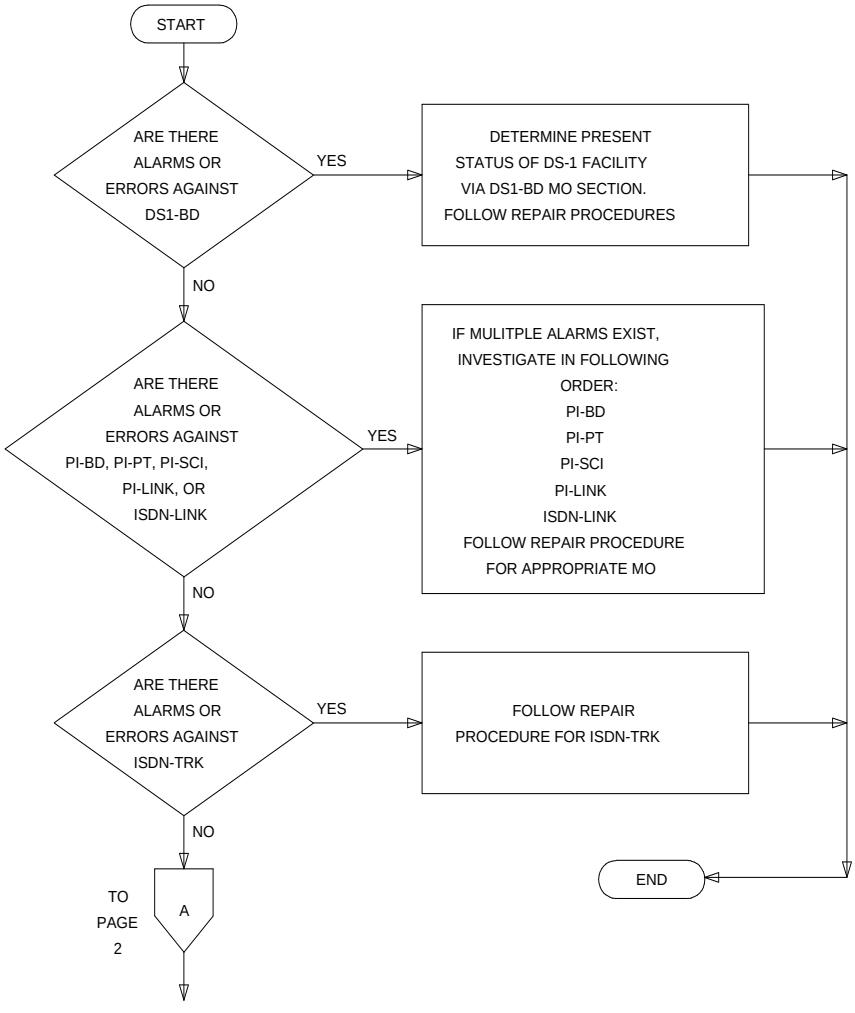

Figure 1-19. Processing of ISDN-PRI Problems (Page 1 of 2)

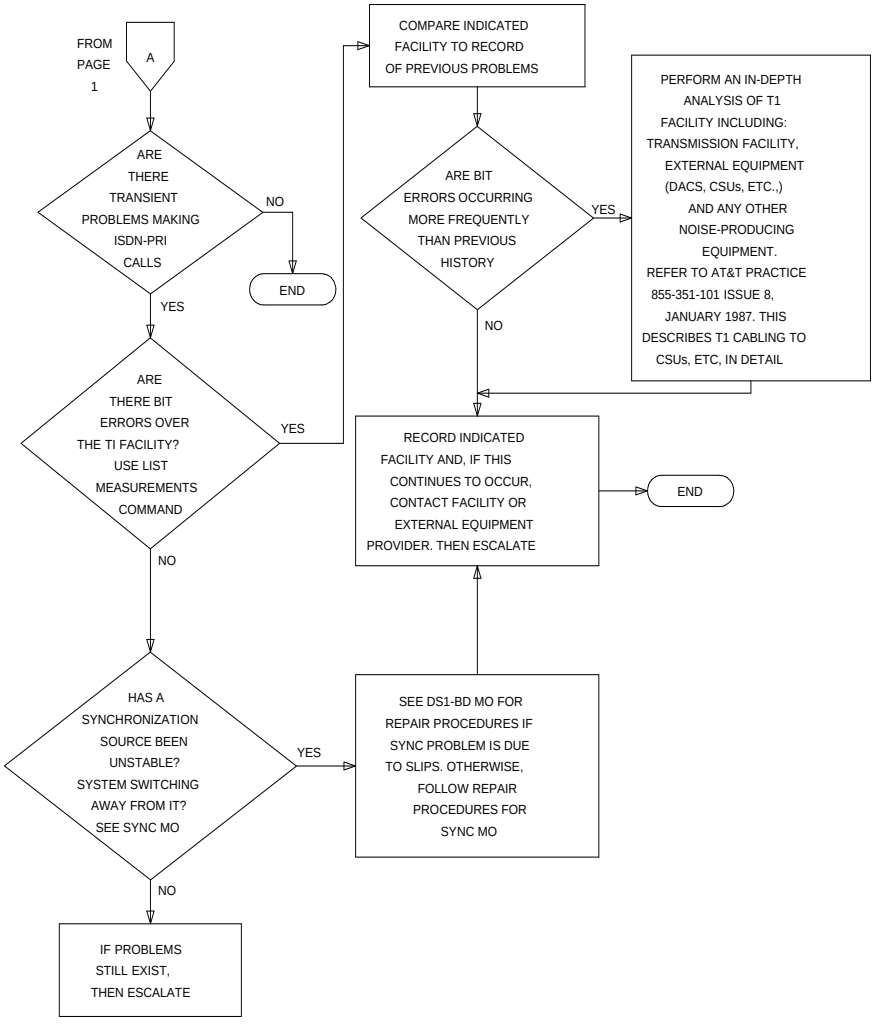

Figure 1-20. Processing of ISDN-PRI Problems (Page 2 of 2)

Troubleshooting PRI Endpoint Problems

The following flowchart, Figure 1-21 and Figure 1-22, defines a layered approach when troubleshooting PRI endpoint problems. Since a problem at a lower layer affects upper layers, layers are investigated from low to high. In the flowchart, the DS1 facility is layer 1, the TN765 Processor Interface is layer 2, and the ISDN trunks are layer 3.

The troubleshooting procedure described here diagnoses faults between the switch and the line-side PRI terminal adapter/ISDN-PRI endpoint equipment. Problems encountered on the network-side of a wideband connection or problems with end-to-end equipment compatibility are outside the scope of this manual.

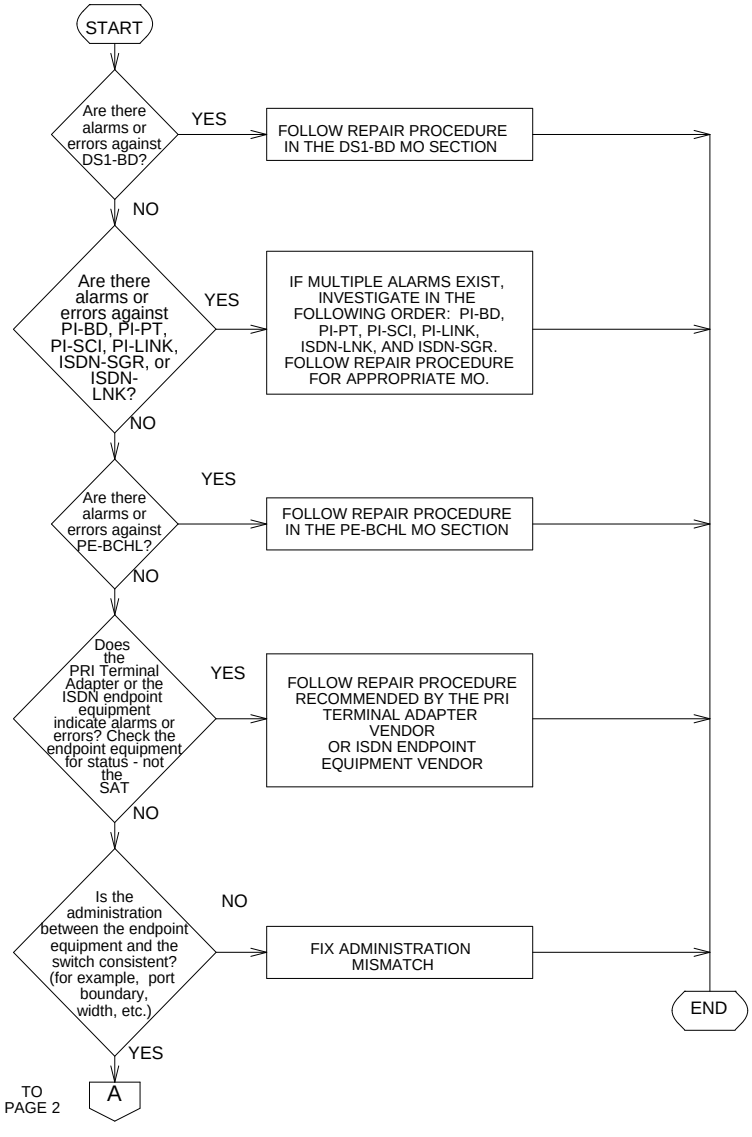

Figure 1-21. Processing of PRI Endpoint Problems (Page 1 of 2)

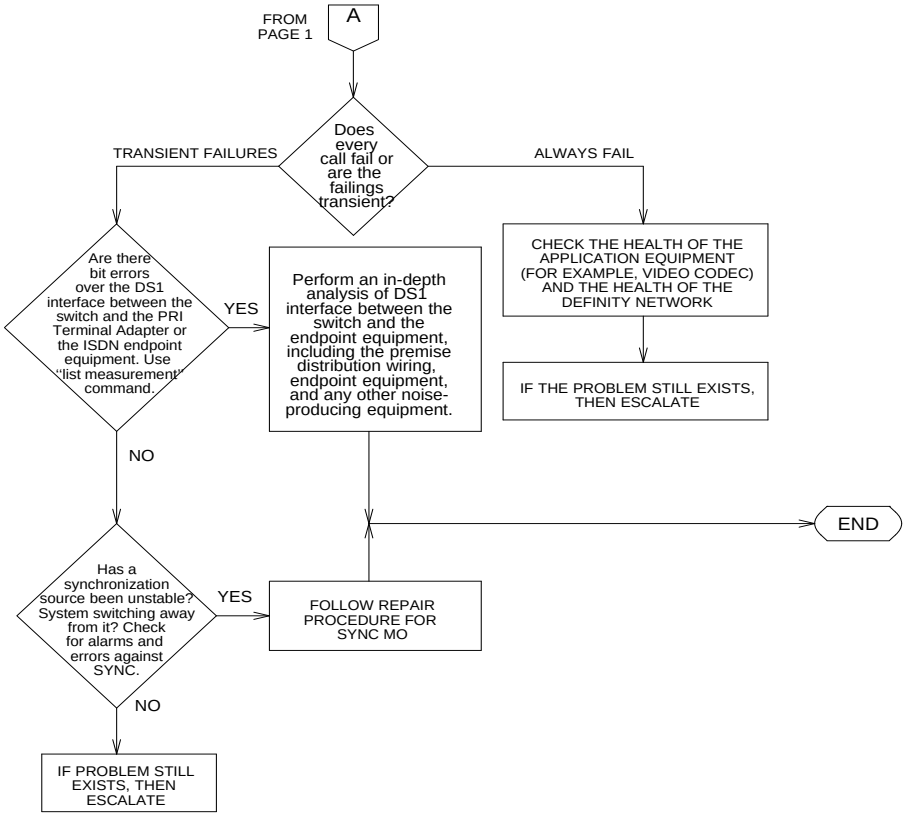

Figure 1-22. Processing of PRI Endpoint Problems (Page 2 of 2)

Troubleshooting ISDN-PRI Test Call Problems

An ISDN-PRI test call is a diagnostic call placed across an ISDN-PRI user-network interface to a previously-designated number. An ISDN-PRI test call is also a maintenance procedure concerned with the identification and verification ISDN-PRI user-network interface problems. The ISDN-PRI test call can access ISDN-PRI trunks only.

Placing an Outgoing ISDN-PRI Test Call

NOTE:
An ISDN-PRI test call can be placed only if the circuit translates to an ISDN-PRI trunk.

An ISDN-PRI test call can be originated via either the *synchronous* or the *asynchronous* method. Each method is described below.

Synchronous Method

One command is used in this method to start, stop and query an ISDN-PRI test call. In the synchronous method, an outgoing ISDN-PRI test call may be part of a system technician-demanded long test sequence to test a circuit pack, port, or trunk. Therefore, the command line entry can be any of the following:

test trunk <grp>/<mbr> long [repeat #]
test port PCSSpp long [repeat #]
test board PCSS long [repeat #]

The “long” qualifier must be entered in the above commands in order for the ISDN test call to run. The repeat number (#) can be any number from 1 through 99 (default = 1).

The following information is displayed in response to the above commands:

- **Port**: The port address (PCSSpp) of the maintenance object under test.
- **Maintenance Name**: The type of maintenance object tested.
- **Test Number**: The actual test that was run.
- **Test Results**: Indicates whether the test passes, fails, or aborts.
- **Error Code**: Additional information about the results of the test. (See the ISDN Trunk Maintenance documentation for details.)

Asynchronous Method

NOTE:
The asynchronous method requires a Maintenance/Test circuit pack to be physically present in the system.

In this method, four commands are used to start, stop, query, and list an outgoing ISDN-PRI test call. These commands are as follows:

clear isdn-testcall <grp>/<mbr> (stop)
list isdn-testcall (list)
status isdn-testcall <grp>/<mbr> (query)
test isdn-testcall <grp>/<mbr> [minutes] (start)

NOTE:
Before placing an outgoing ISDN-PRI test call, verify that the FAC on the System Features Form has been administered as well as the Far End Test Line No and TestCall Bearer Capability Class (BCC) on the Trunk Group Administration Form. Furthermore, if the ISDN-PRI trunk is of the “`cbc`” (call by call) service type, then the `Testcall Service` field on Trunk Group Administration Form must have been administered also.

To initiate an outgoing ISDN-PRI test call in the asynchronous method, issue the following command:

test isdn-testcall <grp>/<mbr> [minutes]

This command enables you to specify a specific the trunk on which to originate the ISDN-PRI test call.

NOTE:
The optional qualifier can also be used that specifies in minutes the duration of the test call. If no duration is specified, the default duration is used which is 8.4 or 9.6 seconds. The qualifier “minutes” accepts the numeric values one through 120 (that is, two hours = 120 minutes).

Figure 1-23 shows a typical response to the **test isdn-testcall** command:

```
test isdn-testcall

Port     Maintenance Name    Test Number    Test Result   Error Code

1B1501   ISDN-TRK              258            PASS
```

Figure 1-23. Typical Response to Test ISDN-Testcall Command

Field descriptions

`Port`	Port address: **PCSSpp** (cabinet-carrier-slot-circuit)
`Maintenance Name`	Name of maintenance object
`Test Number`	The actual test that was run.
`Test Result`	Test result: Pass, Fail, Abort
`Error Code`	Numeric code explaining why the release failed or aborted. Refer to the detailed list of the codes by test number for each MO or see the ISDN Trunk Maintenance documentation for details.

The functions of the **clear**, **list**, and **status** commands associated with the ISDN Testcall are summarized in the following list. For more detailed information, refer to the appropriate sections as directed.

- **Clear isdn-testcall <grp>/<mbr>** enables you to cancel an in-progress ISDN-PRI test call and allow another test call to start. For details on this command, refer to the “clear isdn-testcall” command in Chapter 2, “Maintenance Commands for R6csi”.

- **List isdn-testcall <grp>/<mbr>** enables you to list all the ISDN-PRI trunks in use for an ISDN-PRI test call in the system. For details on this command, refer to the "list testcalls" command in Chapter 2, "Maintenance Commands for R6csi".
- **Status isdn-testcall <grp>/<mbr no> [minutes]** enables you to check on the progress of an outgoing test call. When an outgoing ISDN-PRI test call completes in a specific port network, another ISDN-PRI trunk from the same port network is available for testing (regardless of whether the **status** information has been displayed). For details on this command, refer to the "status isdn-testcall" command description in Chapter 2, "Maintenance Commands for R6csi".

Troubleshooting the Outgoing ISDN-Testcall Command

If the TestCall BCC field appears on the Trunk Group Administration Form, make sure the TestCall BCC field indicates the correct BCC for the service provisioned on the ISDN-PRI trunk. The TestCall BCC values are defined as follows:

- 0—Voice
- 1—Digital Communications Protocol Mode 1
- 2—Mode 2 Asynchronous
- 3—Mode 3 Circuit
- 4—Digital Communications Protocol Mode 0 (usually the default).

NOTE:
If the ISDN-PRI trunk is of type "cbc," make sure the TestCall Service field on the Trunk Group Administration Form indicates the correct service so that a network facility message can be sent across the ISDN-PRI network

If the outgoing ISDN-PRI test call keeps aborting, please make sure that the far-end device can handle DCP Mode 0 or DCP Mode 1.

NOTE:
Before attempting to make an ISDN-PRI test call to the public network (that is, the network is the far-end), make sure that test call service is provisioned by the network. The user must subscribe to Test Type 108 service and have the correct far-end test call number administered on the trunk group form for the call to be allowed.

Install DS1 CPE Loopback Jack (T1 Only)

Using the DS1 CPE Loopback Jack (apparatus code 700A, comcode 107988867), a technician can test the DS1 span between the system and the network interface point. The 700A can quickly isolate DS1 problems to either the customer premises or to the external DS1 span.

The 700A loopback jack is required when DC power appears at the interface to the ICSU. *The loopback jack isolates the ICSU from the DC power and properly loops the DC span power*. The 700A is also used when no smart jack is installed by the local phone company.

NOTE:
The loopback jack operates with any vintage of TN767E (or later) or TN464F (or later) DS1 circuit packs. The loopback jack operates with the 120A2 (or later) Integrated Channel Service Unit (ICSU) only; *not* the 31xx series of CSUs, other external CSUs, or earlier ICSUs.

Loopback Jack Installation

Configurations Using a Smart Jack

The preferred location of the loopback jack is at the interface to the Smart Jack. This provides maximum coverage of CPE wiring when remote tests are run using the loopback jack. If the Smart Jack is not accessible, install the loopback jack at the extended demarcation point.

1. If there is no extended demarcation point, install the loopback jack directly at the network interface point as shown in Figure 1-24.
2. If there is an extended demarcation point and the Smart Jack is not accessible, install the loopback jack as shown in Figure 1-25.
3. If there is an extended demarcation point, but the Smart Jack is accessible, install the loopback jack as shown in Figure 1-26.

Configurations Without a Smart Jack

1. Install the loopback jack at the point where the cabling from the ICSU plugs into the “dumb” block. If there is more than one “dumb” block, choose the one that is closest to the Interface Termination feed or the fiber MUX. This provides maximum coverage for loopback jack tests. Refer to Figure 1-27 and Figure 1-28.

Installation

1. To install the loopback jack, simply disconnect the RJ-48 (8-wide) connector (typically an H600-383 cable) at the appropriate interface point and connect the loopback jack in series with the DS1 span. See Figure 1-24 through Figure 1-28.
2. Plug the H600-383 cable from the ICSU into the female connector on the loopback jack.
3. Plug the male connector on the loopback jack cable into the network interface point.

NOTE:
Do not remove the loopback jack after installation. This is not a test tool and should always be available to remotely test a DS1 span.

Administration

1. At the management terminal, enter **change ds1 <location>**. The "location" is the DS1 interface circuit pack for which the loopback jack was installed.
2. Be sure the "near-end CSU type" is set to `integrated`.
3. On page 2 of the form, change the `supply CPE loopback jack power` field to `y`.

NOTE:
Setting this field to **y** informs the technician that a loopback jack is present on the facility. This allows a technician to determine that the facility is available for remote testing.

4. Enter **save translation** to save the new information.

DS1 Span Test

This test should only be performed after the DS1 circuit pack and the 120A2 (or later) ICSU have been successfully tested using appropriate maintenance procedures. The DS1 span test consists of 2 sequential parts. Each part provides a result indicating if there is a problem in the CPE wiring. CPE wiring may be considered problem-free only if the results of both parts are successful.

The first part of the span test powers-up the loopback jack and attempts to send a simple code from the DS1 board, through the wiring and loopback jack, and back to the DS1 board. Maintenance software waits about 10 seconds for the loopback jack to loop, sends the indication of the test results to the management terminal, and proceeds to the second part of the test.

The second part of the test sends the standard DS1 3-in-24 stress testing pattern from the DS1 board, through the loopback jack, and back to a bit error detector

and counter on the DS1 board. The bit error rate counter may be examined at will via the management terminal, and provides the results of the second part of the test. The test remains in this state until it is terminated so that the CPE wiring may be bit error rate tested for as long as desired.

1. Busy out the DS1 circuit pack by entering **busyout board UUCCSS** (where UUCCSS is the cabinet, carrier, and slot number of the DS1 board).
2. At the management terminal, enter **change ds1 <location>** and verify the `near-end csu type` is set to `integrated`.
3. Change to page 2 of the DS1 administration form and confirm that the TX LBO field is 0dB. If not, record the current value and change it to 0dB for testing. Press Enter to implement the changes or press Cancel to change nothing.
4. Enter **test ds1-loop <location> cpe-loopback-jack**. This turns on simplex power to the loopback jack and waits about 20 seconds for any active DS1 facility alarms to clear. A “PASS” or “FAIL” displays on the terminal. This is the first of the 2 results. A “FAIL” indicates a fault is present in the wiring between the ICSU and the loopback jack. The loopback jack may also be faulty. A “PASS” only indicates that the loopback jack looped successfully, not that the test data contains no errors. If a “PASS” is obtained, continue with the following steps.

   NOTE:
   The loss of signal (LOS) alarm (demand test #138) is not processed during this test while the 3-in-24 pattern is active.

5. Enter **clear meas ds1 loop <location>** to clear the bit error count.
6. Enter **clear meas ds1 log <location>** to clear the performance measurement counts.
7. Enter **clear meas ds1 esf <location>** to clear the ESF error count.
8. Enter **list meas ds1 sum <location>** to display the bit error count. Refer to Table 1-5 for troubleshooting information.

Table 1-5. DS1 Span Troubleshooting

Displayed Field	Function	Indication
Test: cpe-loopback-jack	Pattern 3-in-24	The loopback jack test is active.

Table 1-5. DS1 Span Troubleshooting

Displayed Field	Function	Indication
Synchronized	Y or N	If "y" displays, the DS1 circuit pack has synchronized to the looped 3-in-24 pattern and is accumulating a count of the bit errors detected in the pattern until the test has ended. If n displays, retry the test 5 times by ending the test per Step 11 and re-starting the test per Step 4. If the circuit pack never synchronizes, substantial bit errors in the 3-in-24 pattern are likely. This could be intermittent connections or a broken wire in a receive or transmit pair in the CPE wiring.
Bit Error Count	Cumulative count of detected errors	If there are no wiring problems, the counter remains at 0. A count that pegs at 65535 or continues to increment by several hundred to several thousand on each **list meas** command execution indicates intermittent or corroded connections, severe crosstalk, or impedance imbalances between the two conductors of the receive pair or the transmit pair. Wiring may need replacement. Note that "ESF error events" counter and the ESF performance counter summaries ("errored seconds", "bursty errored seconds", and so forth) will also increment. These counters are not used with the loopback jack tests. However, they will increment if errors are occurring. Counters should be cleared following the test.

9. Repeat Steps 5 through 8 as desired to observe bit error rate characteristics. Also, wait 1 to 10 minutes between Steps 5 through 7. One minute without errors translates to better than a 1 in 10 to the eighth error rate. Ten minutes without errors translates to better than a 1 in 10 to the ninth error rate.

10. If the test runs for 1 minute with an error count of 0, confirm that the 3-in-24 pattern error detector is operating properly by entering **test ds1-loop <location> inject-single-bit-error**. This causes the 3-in-24 pattern generator on the DS1 circuit pack to inject a single-bit error into the transmit pattern. A subsequent **list meas ds1 summary <location>** command displays the bit error count. If a count greater than 1 is displayed, replace the ICSU and retest. If the problem continues, replace the DS1 circuit pack.

11. Terminate the test by entering **test ds1-loop <location> end cpe-loopback-jack-test**. Wait about 30 seconds for the DS1 to re-frame on the incoming signal and clear DS1 facility alarms.

    Loopback termination fails under the following conditions:

a. The span is still looped somewhere. This could be at the loopback jack, at the ICSU, or somewhere in the network. This state is indicated by a fail code of 1313. If the red LED on the loopback jack is on, replace the ICSU. Re-run the test and verify that the loopback test terminates properly. If not, replace the DS1 circuit pack and repeat the test.

b. The DS1 cannot frame on the incoming span's signal after the loopback jack is powered down. This means that there is something wrong with the receive signal into the loopback jack from the "dumb" block or the Smart Jack. If the service provider successfully looped and tested the span, up to the Smart Jack, this condition isolates the problem to the wiring between the loopback jack and the Smart Jack. Refer to "Loopback Jack Fault Isolation Procedures" for information on how to proceed in this case. The test cannot be successfully terminated until a good signal is received. To properly terminate the test before a good receive signal is available, enter **reset board <location>**.

12. Restore the TX LB0 field to the original value recorded in Step 2.
13. Release the DS1 circuit pack using the **release board PCSSpp** command.
14. Leave the loopback jack connected to the DS1 span.

Loopback Jack Fault Isolation Procedures

This section describes the possible DS1 configurations in which the loopback jack may be used. These configurations are: when the DS1 provider includes a Smart Jack, when no Smart Jack is provided at all, and when sites use fiber multiplexers.

Configurations Using a Smart Jack

The addition of the loopback jack and the presence of a Smart Jack divides the DS1 span into 3 separate sections for fault isolation. These sections are shown in Figure 1-24 through Figure 1-26 for the different span configurations. They are:

Section 1:	Between the 120A2 (or later) ICSU and the loopback jack.
Section 2:	Between the loopback jack and the Smart Jack (network interface point).
Section 3:	From the Smart Jack to the CO. It is necessary to contact the DS1 provider to run this test.

A problem can exist in 1 or more of the 3 sections. The field technician is responsible for finding and correcting problems in the first 2 sections. The DS1 service provider is responsible for finding and correcting problems in the third section. Testing is divided into 3 steps.

- Test customer premises wiring (section 1 in the following 3 figures) from the ICSU to the loopback jack as described in “DS1 Span Test.”
- Test the CO-to-network interface wiring (section 3 in Figure 1-24) using the Smart Jack loopback (CO responsibility). Coordinate this test with the DS1 provider.
- Test the short length of customer premises wiring (section 2 in the following 3 figures) between the loopback jack and the Smart Jack. This can be done using a loopback that “overlaps” section 2 of the cable. Any of the following loopbacks can do this:

  a. The local ICSUs line loopback, which is typically activated, tested, and then deactivated by the DS1 service provider at the CO end.

  b. The local DS1 interface’s payload loopback, activated and tested by the DS1 service provider at the CO end.

  c. The far-end ICSU’s line loopback. This test is activated at the management terminal by entering **test ds1-loop <location> far-csu-loopback-test-begin**. The test is terminated by entering **test ds1-loop <location> end-loopback/span-test**. Bit error counts are examined as described in “DS1 Span Test.” This test method is the least preferable because it covers wiring that is not in the local portion of the span. This test only isolates problems to section 2 wiring if there are no problems in the wiring between the far-end CO and the far-end ICSU. Coordinate this test with the DS1 service provider.

  If any of the above tests (a, b, or c) fail, a problem is indicated in section 2 as long as the tests for section 1 and section 3 pass. Since section 2 includes the network interface point, it is necessary to work with the service provider to isolate the fault to the loopback jack cable, the “dumb” block, or the Smart Jack.

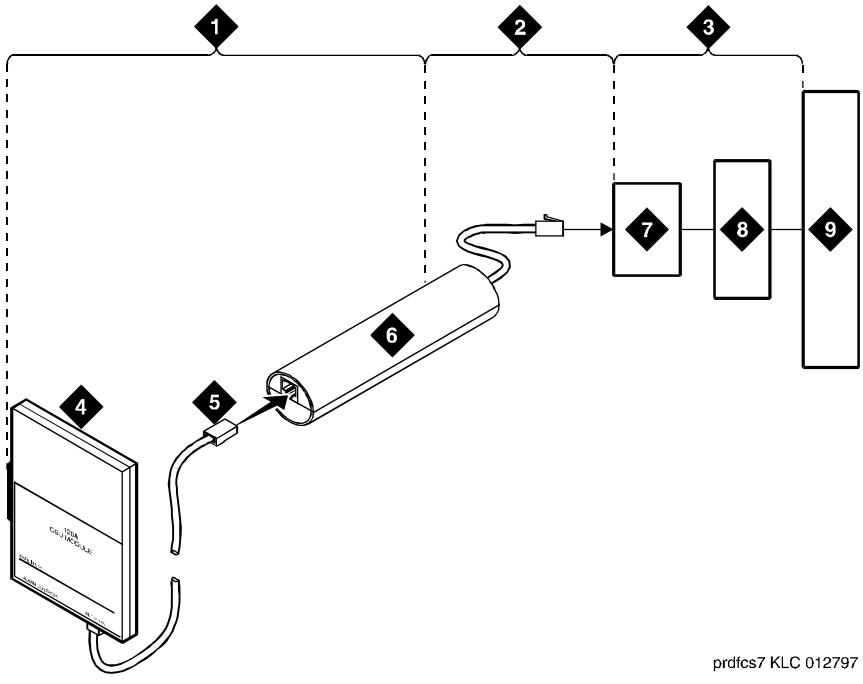

Figure Notes:

1. Span Section 1
2. Span Section 2
3. Span Section 3
4. 120A2 (or later) Integrated Channel Service Unit (ICSU)
5. RJ-48 to Network Interface (Up to 1000 Feet) (305 m)
6. Loopback Jack
7. Network Interface Smart Jack
8. Interface Termination or Fiber MUX
9. Central Office

Figure 1-24. Network Interface at Smart Jack

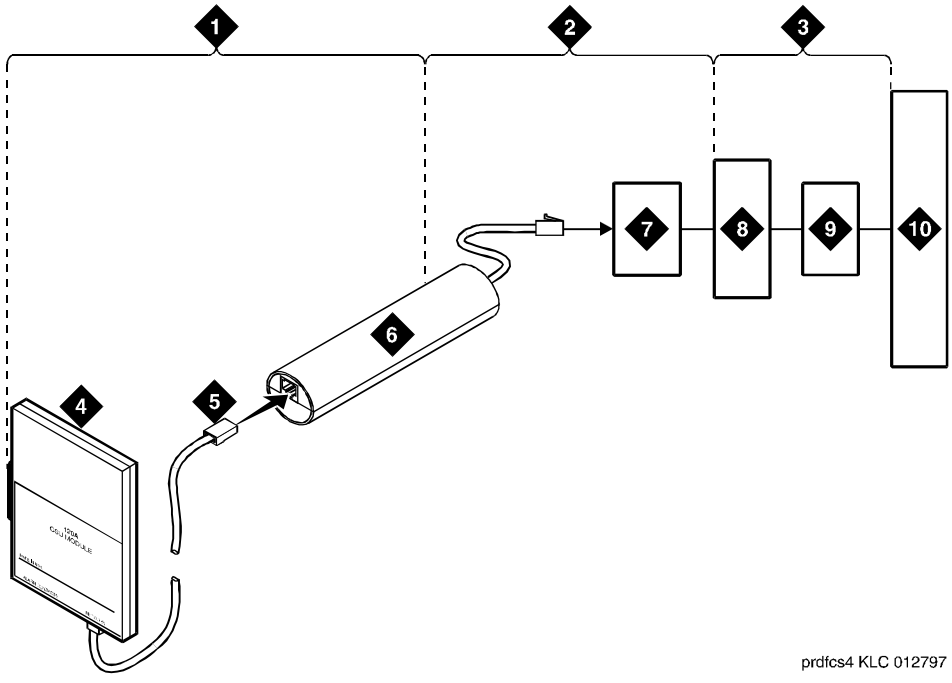

Figure Notes:

1. Span Section 1
2. Span Section 2
3. Span Section 3
4. 120A2 (or later) Integrated Channel Service Unit (ICSU)
5. RJ-48 to Network Interface (Up to 1000 Feet) (305 m)
6. Loopback Jack
7. “Dumb” Block (Extended Demarcation)
8. Network Interface Smart Jack
9. Interface Termination or Fiber MUX
10. Central Office

Figure 1-25. Network Interface at Extended Demarcation Point (Smart Jack Inaccessible)

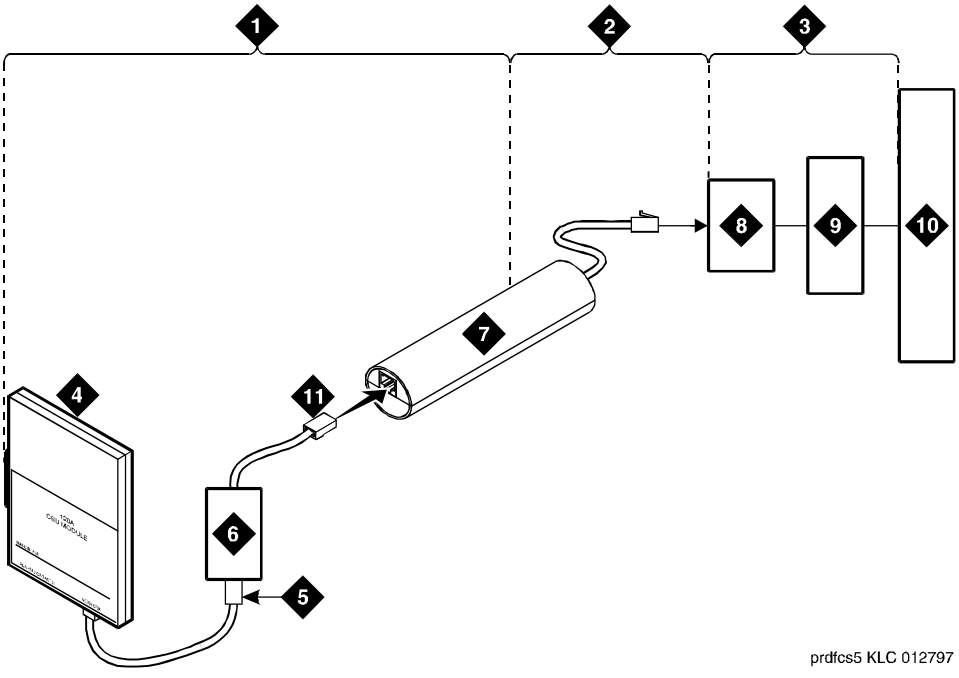

Figure Notes:

1. Span Section 1
2. Span Section 2
3. Span Section 3
4. 120A2 (or later) Integrated Channel Service Unit (ICSU)
5. RJ-48 to Network Interface (Up to 1000 Feet) (305 m)
6. “Dumb” Block (Extended Demarcation)
7. Loopback Jack
8. Network Interface Smart Jack
9. Interface Termination or Fiber MUX
10. Central Office
11. “Dumb” Block to Smart Jack RJ-48

Figure 1-26. Network Interface at Extended Demarcation Point (Smart Jack Accessible)

Configurations Without a Smart Jack

When the loopback jack is added to a span that does not contain a Smart Jack, the span is divided into 2 sections. See Figure 1-27 and Figure 1-28.

1. ICSU to the loopback jack.
2. Loopback jack to the Central Office (CO).

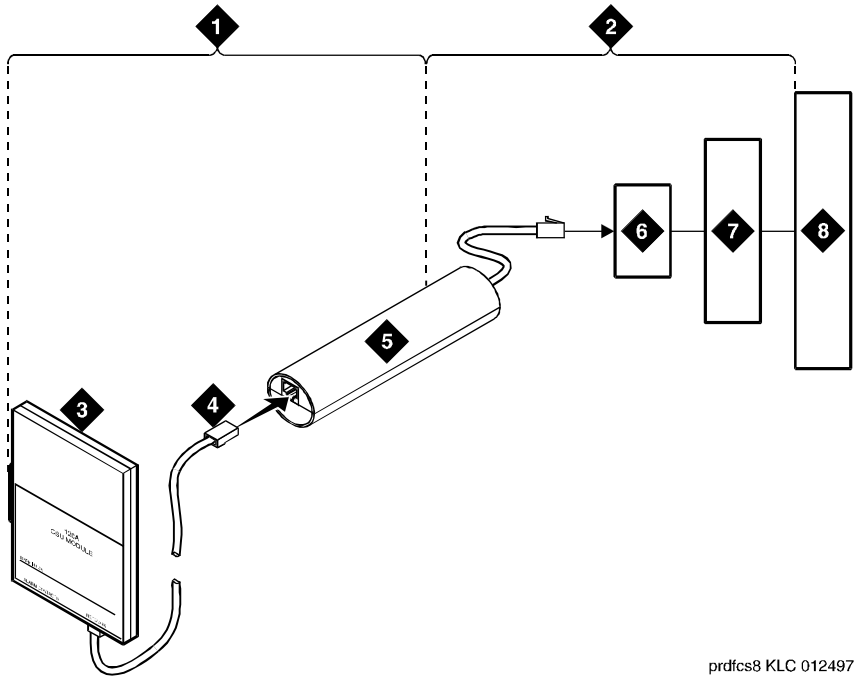

Figure Notes:

1. Span Section 1
2. Span Section 2
3. 120A2 (or later) Integrated Channel Service Unit (ICSU)
4. RJ-48 to Network Interface (Up to 1000 Feet) (305 m)
5. Loopback Jack
6. “Dumb” Block (Demarcation Point)
7. Interface Termination or Fiber MUX
8. Central Office

Figure 1-27. Network Interface at “Dumb” Block

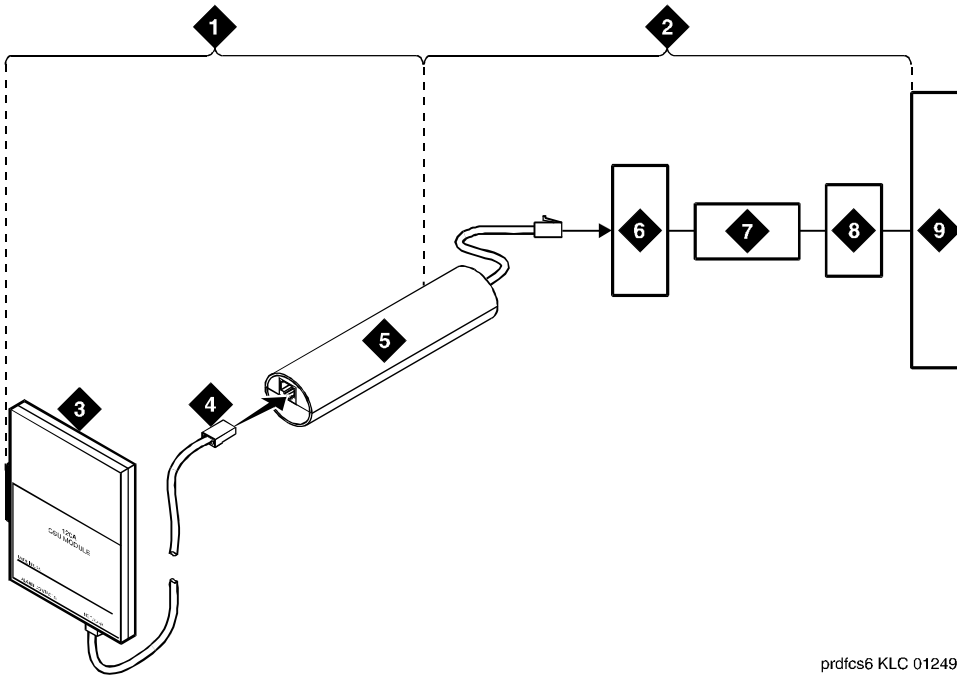

Figure Notes:

1. Span Section 1
2. Span Section 2
3. 120A2 (or later) Integrated Channel Service Unit (ICSU)
4. RJ-48 to Network Interface (Up to 1000 Feet) (305 m)
5. Loopback Jack
6. “Dumb” Block (Demarcation Point)
7. Repeater
8. Fiber MUX
9. Central Office

Figure 1-28. Network Interface at “Dumb” Block with Repeater Line to Fiber MUX

Section 2 includes the short cable from the loopback jack to the “dumb” block demarcation point (part of the loopback jack). This is the only portion o f section 2 that is part of customer premises wiring but is not covered in the loopback jack’s loopback path.

A problem can exist in 1 or both of the 2 sections. The field technician is responsible for finding and correcting problems in section 1 and the loopback cable portion of section 2. The DS1 service provider is responsible for finding

and correcting problems in the majority of section 2. Testing is divided into 2 steps.

1. Test customer premises wiring (section 1 in Figure 1-27) from the ICSU to the loopback jack as described in the “DS1 Span Test” section.
2. Test the loopback jack-to-”dumb” block and ”dumb” block-to-CO wiring (section 2 in Figure 1-27). This can be done using a loopback that “overlaps” the section of the span. Any of the following loopbacks can do this:

   a. The local ICSUs line loopback, which is typically activated, tested, and then deactivated by the DS1 service provider at the CO end.

   b. The local DS1 interface’s payload loopback, activated and tested by the DS1 service provider at the CO end.

   c. The far-end ICSU’s line loopback. This test is activated at the management terminal by entering **test ds1-loop <location> far-csu-loopback-test-begin**. The test is terminated by entering **test ds1-loop <location> end-loopback/span-test**. Bit error counts are examined as described in the “DS1 Span Test” section. This test only isolates problems to section 2 wiring if there are no problems in the wiring between the far-end CO and the far-end ICSU. Coordinate this test with the DS1 service provider.

   If any of the above tests (a, b, or c) fail, a problem is indicated in section 2. This could mean bad loopback jack -to-”dumb” block cabling, but is more likely to indicate a problem somewhere between the “dumb” block and the CO. This is the responsibility of the DS1 service provider. If the DS1 Span Test confirms that there are no problems in section 1, the technician should proceed as follows to avoid unnecessary dispatch.

   - Identify and contact the DS1 service provider
   - Inform the DS1 provider that loopback tests of the CPE wiring to the “dumb” block (section 1) showed no problems
   - If the far-end ICSU line loopback test failed, inform the DS1 provider
   - Request that the DS1 provider perform a loopback test of their portion of the section 2 wiring by sending someone out to loop section 2 back to the CO at the “dumb” block.

     If this test fails, the problem is in the service provider’s wiring.

     If the test passes, the problem is in the cable between the loopback jack and the “dumb” block. Replace the loopback jack.

Configurations Using Fiber Multiplexers

Use the loopback jack when customer premises DS1 wiring connects to an on-site fiber multiplexer (MUX) and allows wiring to the network interface point on the MUX to be remotely tested. This requires that ICSUs be used on DS1 wiring to the MUX.

Fiber MUXes can take the place of Interface termination feeds as shown in Figure 1-24, Figure 1-25, Figure 1-26, and Figure 1-27. Test these spans using the same procedures as metallic spans. Note the following points:

1. Fiber MUXes may have loopback capabilities that can be activated by the service provider from the CO end. These may loop the signal back to the CO or back to the DS1 board. If the MUX provides the equivalent of a line loopback on the “problem” DS1 facility, this may be activated following a successful loopback jack test and used to isolate problems to the wiring between the loopback jack and the MUX.
2. Be aware that there are installations that use repeatered metallic lines between the MUX and the “dumb” block. Theses lines require DC power for the repeaters and this DC power is present at the “dumb” block interface to the CPE equipment. *A loopback jack is required in this configuration to properly isolate and terminate the DC power*.

To check for the presence of DC, make the following 4 measurements at the network interface jack:

1. From Transmit Tip (T, Pin 5) to Receive Tip (T1, Pin 2)
2. From Transmit Ring (R, Pin 4) to Receive Ring (R1, Pin 4)
3. From Transmit Tip (T, Pin 5) to Transmit Ring (R, Pin 4)
4. From Receive Tip (T1, Pin 2) to Receive Ring (R1, Pin 4)

All measurements should read 0 (zero) volts DC. For pin numbers and pin designations, refer to *Integrated Channel Service Unit (ICSU) Installation and Operation*, 555-230-193.

LED Interpretation

The lighting and unlighting of LEDs indicates to the system user the status of various maintenance components in the system. LEDS are located on the attendant console, on all circuit packs in the switch cabinets and, optionally, on customer-designated voice terminals. The following LEDS are included in the system:

- “TN798 Processor Circuit Pack LEDs”
- “Attendant Console LEDs”
- “Control and Port Circuit Pack Status LEDs”

- "Power Supply LEDs"

TN798 Processor Circuit Pack LEDs

The front panels of the Processor circuit pack and the Maintenance circuit pack are identical. Each has two groups of LEDs. One group indicates the status of the pack, and the other group (which includes the Major, Minor, and Warning alarms described in the "Alarm and Error Reporting" section) reflects maintenance conditions in the entire system. See Figure 1-29.

- Red (alarm)—the system has detected a fault in this circuit pack.

  NOTE:
  Alarms on the PROCR, PR-MAINT, MEMORY, and PR-MEM MOs are indicated by the red LED on the Processor circuit pack.

- Green (test)—the system is running tests on this circuit pack.
- Yellow (busy)—this circuit pack is in use.
- MAJOR ALARMS (red)
- MINOR ALARMS (red)
- EMERGENCY TRANSFER (red)—indicates emergency transfer has been invoked

  NOTE:
  If the AC power cord is unplugged from the control cabinet, the emergency transfer feature invokes, however the EMERGENCY TRANSFER LED (red) is not lit due to loss of AC power.

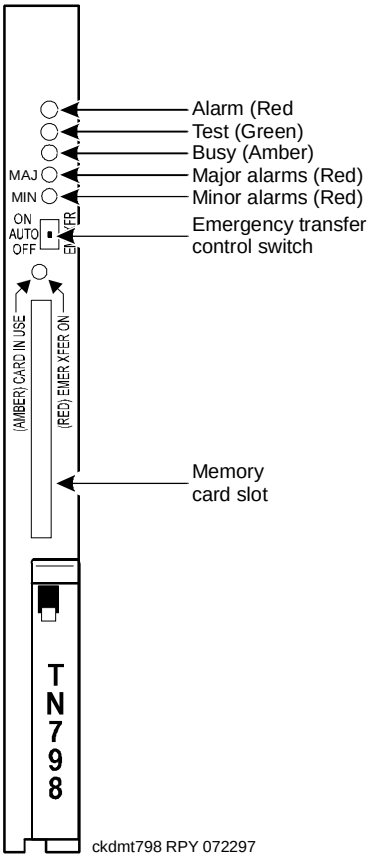

Figure 1-29. LED Indicators on the TN798 Processor Circuit Pack

NOTE:
If the LED just above the Memory Card Slot is alternating red and amber, this indicates both card in use and emergency transfer.

Attendant Console LEDs

The console has two red LEDs, labeled ALM and ACK, on the left side of the dial. The left LED lights steadily when there is a Major or Minor alarm at the switch cabinet. The right LED lights steadily if the alarm has been successfully reported to INADS. If the system is unable to report the alarm to INADS, the LED flashes; signaling the attendant to call INADS and report the alarm.

Control and Port Circuit Pack Status LEDs

Each circuit pack has three LEDs on the front panel visible at the front of the carrier. On all circuit packs, except the 650A Power Unit, the LEDs indicate:

1. Red (alarm) — If the circuit pack is communicating with the system, the system has detected a fault in this circuit pack. An on-board alarm for this circuit pack is displayed in the Alarm Log.

   The circuit pack also lights this LED when either the circuit pack has not yet initialized communication with the system or when the circuit pack loses contact with the system and stops functioning (circuit pack is said to be "in reset"). In these cases, there may not be an alarm in the Alarm Log. To determine if the red LED is lit because the circuit pack is not in contact with the system, issue the **list configuration board PCSS** command, where PCSS refers to the slot containing this circuit pack. If the system does not detect the circuit pack, this command returns `Identifier not assigned` or `no board`.

   If the circuit pack has just been inserted, the system may still be initializing the circuit pack. If, after 5 minutes, the circuit pack still has not initialized communications with the system, check the MO for any special instructions (for example, EPN Maintenance circuit pack can stop EXP-INTF circuit pack from initializing). If the MO does not provide the needed information, perform the following steps:

   - Check the Error Log for TONE-BD and TDM-BUS errors. Enter **test tdm P** where P is the port network containing the relevant slot. Refer to "Restarting Nonfunctioning Port Circuit Packs" in the general description of the "TDM-BUS (TDM Bus)". Enter **test tone-clock PC**, where P is the network containing the relevant slot, and C is the carrier containing the relevant slot. Follow appropriate sections for any TONE-BD and TDM-BUS errors.
   - Reseat the suspect circuit pack.

   WARNING:
   Reseating some circuit packs may be very destructive (for example, Control Carrier circuit packs.)

   Wait 5 minutes. Then issue the **list configuration board PCSS** command. If the result indicates that the system still has not registered the circuit pack, go to next step.

   - Try to insert the circuit pack into a different slot and try to insert a different circuit pack into the suspect slot (provided the maintenance documentation for this circuit pack does not warn against either of these actions).
   - If the system seems to be functioning correctly, but the circuit pack does not start communicating with the system, replace the circuit pack.

2. Green (test)—the system is running tests on this circuit pack.
3. Yellow (busy)—indicates that the circuit pack is in use.

NOTE:
A port circuit pack also lights its red LED when it performs initialization tests (for example, when the circuit pack is initially inserted into the system). If all initialization tests pass, the red LED is turned off. If any initialization tests fail, the red LED remains lighted and the circuit pack is not placed into service.

During the various states of operation (start-up testing, normal operation, circuit failure, and so forth) circuit pack status LED indications appear as shown in Table 1-6.

Table 1-6. Control and Port Circuit Pack Status LEDs

Equipment Type	LED	Description
Port Circuit Packs	Red	On briefly during power up, circuit pack reseating, resetting, and system reset. Steadily on if circuit pack fails start-up test or fails while in use. Off during normal operation.
	Green	Briefly on during circuit pack testing following power up, circuit pack reseating, and system reset. On during periodic, scheduled, and system technician demanded testing. Off during normal operation.
	Yellow	On when any port in the circuit pack is in use, otherwise, off.
Control Circuit Packs	Red	On briefly during power up and system reset. Steadily on if circuit pack fails start-up test or fails while in use. Off during normal operation.
	Green	On briefly during board testing following power up and system reset. Also on during periodic, scheduled, and system technician-demanded testing. Off during normal operation.

Continued on next page

Table 1-6. Control and Port Circuit Pack Status LEDs — *Continued*

Equipment Type	LED	Description
	Yellow	Processor ■ Lit during processor initialization. ■ Lit during system initialization (stays lit until Emergency Transfer is turned off). Tone Detector/Generator ■ Slow blinking when clock is in use; otherwise, off.

Power Supply LEDs

Table 1-7 shows the LED and alarm conditions for the 650A Power Supply. Ring voltage and neon bus output do not activate alarm status.

Table 1-7. LED and Alarm Conditions

Condition	LED Status	Alarm State	Fan Alarm
Normal	Red off; Yellow on	Open	Normal
No input power	Red off; Yellow off	Closed	No input power
DC output not present (except Neon)	Red on; Yellow off	Closed	DC output not present (except Neon)
Fan alarm	Red on; Yellow on	Closed	Fan alarm

Multimedia Call Handling

- "Expansion Services Module"
- "Troubleshooting MMCH"

Expansion Services Module

The Expansion Services Module (ESM) shown in Figure 1-30 provides T.120 data sharing capability on a MMCH multipoint H.320 video conference. Each conference participant must have endpoints administered and a personal computer with the H.320 video application installed. The DEFINITY ECS must have the expansion service module installed.

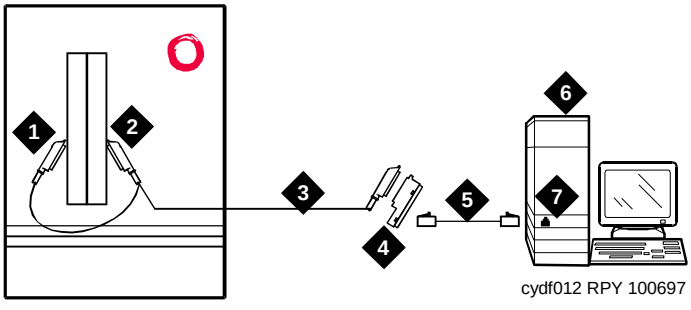

Figure 1-30. Typical ESM connections

Figure Notes

1. Port B Y-cable connector to a TN787 Multimedia Interface (MMI) circuit pack
2. Port A Y-cable connector to a TN2207 PRI circuit pack
3. 25-pair Y-cable
4. 356A adapter
5. D8W cord connected to 356A adapter port 1
6. Expansion Service Module (ESM)
7. Port B on compatible primary rate interface (PRI) card

CAUTION:
The TN2207 circuit pack is the only pack allowing connection of an ESM to the DEFINITY ECS switch.

Troubleshooting MMCH

- "64 Kbps Calls Terminate but Far End Receives 56 Kbps Indication"
- "Calls Terminate with No Audio"
- "Some Parties Cannot Be Heard by Others (Audio Subsetting)"

- "Calls Terminate with No Video"
- "Calls Terminate Correctly but Are Unstable"
- "Synchronization"
- "Voice-Activated Switching Problems"
- "No Switching, Full Motion Video"
- "Video Never Switches to a Particular Party"
- "Audio Echo"
- "Endpoint or I-MUX in Loopback Mode"

Before troubleshooting any problems associated with the DEFINITY MMCH, always be sure that the endpoint is operating correctly (audio, video, and data) by making point-to-point test calls. If possible, make the test calls over the network to test the connectivity and routing of network calls from the endpoint. This eliminates problems such as disconnected audio or video cables and network troubles.

64 Kbps Calls Terminate but Far End Receives 56 Kbps Indication

Description

Some 2x64 Kbps conferences on the DEFINITY MMCH do not establish because of framing, audio, or video problems.

For calls that are routed in the network through a Lucent Technologies/LEC interface, the originating equipment may launch a 64 Kbps call attempt, and the far end receives either a 56 Kbps or 64 Kbps indication. If the far end receives a 64 Kbps indication, the call may have used 56 Kbps facilities. If so, the call may exhibit any of the following conditions:

- No handshaking in one direction or both (call disconnects after timeouts)
- Call connects, but audio or video is corrupted (audio noise or no video)
- Call succeeds without disruption (this is the least likely since one endpoint must be aware that the call is really 56 Kbps to connect)

If any of the above conditions occur, then 64 Kbps calls from the site are blocked.

Solution

Administer the conference for connection at 56 Kbps.

Calls Terminate with No Audio

Description

To support endpoints that do not support Multipoint Command Conference (MCC), the DEFINITY MMCH changes its capability set and initiates a capability set exchange with the endpoint when the Selected Communications Mode (SCM) changes. If the endpoint does not follow the SCM audio mode, the MCU may include the endpoint as a secondary (audio only) endpoint. If the endpoint sends an unknown or unsupported audio mode, then the TN788B decoder port mutes the endpoint from the conference. The user may hear the conference but may not be heard by other parties in the conference.

Solution

1. Use the Status Conference x form and check the Audio Mode field for the current operating mode of the conference.
2. Another indication of the audio modes is in the “Incoming Mode Commands from Endpoint and Outgoing Commands from MMI” on page 3 of the Status Conference x Endpoint y form. Check the `Audio` fields under the Mode Commands/Communication Modes section of the form.

Some Parties Cannot Be Heard by Others (Audio Subsetting)

Description

Problems where varying subsets of the conference hear different things may have problems with the various summing resources/groups that are in use. Traditionally theses faults are caused by the SPE not cleaning up the connections properly. Isolation and diagnosis should focus on the VC resources in use by that conference.

Solution

1. Use the **status conference** command to list the VC resources in use by this conference. Try a hot replacement of any VC boards in use, which refreshes the VC translations and move all of the audio connections to different VC ports.
2. If the problem still exists, try dropping the conference and then bringing the conference back up again. Not only does this refresh VC translations, but uses different timeslots as well.
3. If the problem still exists, suspect a hardware problem. If practical, wait for the DEFINITY MMCH to be idle (no active conferences), and then check the circuit packs for active (yellow) LEDs. If any of these are unexpected, such as on a VC board, try replacing the board and then bringing the conference up again.

Calls Terminate with No Video

Description

Generally, loss of video can be divided into 2 types. The first occurs when the DEFINITY MMCH switches to the endpoint, but nobody sees them. The receivers see either “black” video or a frozen image of the previous speaker depending on the codec of the manufacturer. The type occurs when the DEFINITY MMCH does not switch to an endpoint.

Solution

In the first type described above, wiring problems, power to the camera, or video encoder circuit pack problems in the codec are typical causes.

In the second type, no video from an endpoint typically occurs because it is not a valid video source. This can be checked by looking at page 1 of the Status Conference x Endpoint y Vid form under the Capability section. In this section, a “y” or “c” suggests that the endpoint has video. An “e” means ept has not declared any video capability in cap set, “n” is audio only, and “blank” means audio add-on.

Also check page 1 of the Status Conference x Endpoint y Vs form for indication of the video state for the endpoint values.

Calls Terminate Correctly but Are Unstable

Description

A number of conditions will lead to some or all endpoints having stability problems during the course of a conference. A lack of stability from an endpoint is noticeable by a lack of a video switching while the party is the only talker or excessive disconnects from that endpoint.

Synchronization

Generally, the most common problem is a mismatch in synchronization sources between the endpoint and the DEFINITY MMCH. This typically causes low-level (Px64) handshake problems that can trigger the endpoint/MMCH to disconnect the call. The MCCH’s timers are set to sufficiently high values so that, normally, the endpoint will timeout and disconnect first. If installed in a customer network, it is a good idea to perform an audit of the path synchronization is being supplied. If there are different clock sources between endpoints and the DEFINITY MMCH, some problems are sure to occur. The severity of these problems can range from a handshake failure every few seconds to one per day. Depending on the type of endpoint, this can cause the endpoint to disconnect or just freeze video until the main problem is resolved.

Specifically, PictureTel System 4000 endpoints seem to be the most sensitive to instability. The Lucent Technologies Vistium also disconnects fairly infrequently.

Last, the CLI Rembrandt II VP freezes video and waits for framing to be recovered.

Network Configuration Concerns with Synchronization

When auditing a network for synchronization, avoid unnecessary hops. Thus, a switch providing star-configuration synchronization is preferred over a daisy-chain configuration. Additionally, if there are DEFINITY PBXs that have EPNs, synchronization should be provided to sub nodes from the same port network through which the PBX receives its synchronization. Passing synchronization through the PBX Expansion Interface adds an unnecessary hop to the path and creates another potential point of failure.

Expansion Interface Duplication

If a customer's network uses PBX EPNs with duplicated Expansion Interfaces, scheduled switching of the Expansion Interface links should be disabled on the PBX via **change system-parameters maintenance**. When scheduled maintenance runs and switches the links, there is a brief corruption of the data path. If endpoints have active calls when the switch occurs, this corruption of the data path causes Px64 handshake problems, which lead to the endpoints losing video source status, and sometimes disconnecting as described above. Disabling the EI switching is in the customer's best interest to prevent the disruption of the Px64 data stream. The customer will get the same level of alarm indications and maintenance on the EI links, regardless of the status of scheduled switching.

PRI D-Channel Backup

A somewhat unlikely source of call stability problems occur where the translations for PRI D-channel Backup between two non-MCU switches were incorrect. As an example, on switch A, DS1 1A10 was designated as the primary source, and on switch B, the corresponding DS1 was designated as the secondary source. When scheduled maintenance was run on the switch that had an active standby D-channel, an audit disconnected some calls using the link. The problem was corrected when the D-channel primary/secondary assignments matched.

Processor Duplication on the PBX

Do not enable the PI link switch on scheduled maintenance. This can cause link stability problems on the Accunet Bandwidth Controller (ABC).

Voice-Activated Switching Problems

Voice-activated switching on the DEFINITY MMCH does not follow the loudest talker. The MMCH queues all speaking parties and selects a new video broadcaster (the second-oldest speaking party) when the oldest speaking party has stopped talking. The new broadcaster will see the last speaker as its video.

The system can also “learn” about the noise coming from an endpoint to help prevent false switches, adapting both to noise level and repetitive sounds such as a fan. This adaptation occurs over approximately 10 seconds.

No Switching, Full Motion Video

If a room is excessively noisy, the DEFINITY MMCH may receive sufficient audio signal to conclude that there is a speaker present. Use the Status Conference x form to determine if the MMCH thinks an endpoint is talking. The MMCH sets the `Ts` field to `t` for each endpoint if there is voice energy detected. This endpoint may have to mute when nobody at the site is speaking to allow the conference to proceed normally. Remind the customer that it may be necessary to mute if a side conversation is going on in the background, just as one would do in an audio conference. If the system does not switch broadcasters even after the current broadcaster has muted, check the conference administration using the **display conference X** command to ensure that the conference is in voice-activated mode. Also verify that parties who were speaking are valid video sources as described in the “Calls Terminate with No Video” section above.

The See-Me feature (MCV) can also cause VAS to “lock-up.” An endpoint can activate MCV to force their site to become the broadcaster. If they do not disable the feature when finished, the system remains in this mode indefinitely. Beginning with Release 3.0, the **status conference X** command shows that MCV is in effect by displaying `av` in the Video Status (Vs) column. Page 3 of the Status Conference X Endpoint Y form also has a `Broadcaster` field that indicates MCV is in effect with (SEE-ME) as the broadcaster. The same scenario can occur in a CHAIR or UCC-controlled conference with a designated broadcaster. In this situation the CHAIR/UCC has not released the designated broadcaster and returned to VAS mode. If there is a UCC-designated broadcaster, **status conference X** indicates a Video Status of u. Also, for UCC rollcall the return video may appear to be stuck. Check the Video Status for an “R,” indicating rollcall.

If none of the examples above appears to be the cause, and if the room was quiet, all speakers are valid video sources, the conference is voice-activated, and the speaker can be heard, then escalate the problem.

Video Never Switches to a Particular Party

Description

Verify that the endpoint is a valid video source as described in the “Calls Terminate with No Video” section above. If it is, then the audio from the endpoint may not have sufficient voice signal for the hardware to determine the parties at the endpoint are speaking. Check the `Talk` field on page three of the Status Conference X Endpoint Y form to see if the `talking bit` is `y`. Next, check the audio by standing adjacent to the microphone and speaking at a normal level.

Solution

If the audio is not muffled:

1. Use the **status conference** command to determine which port on the TN788B (VC board) is connected to this endpoint.
2. Check the VC (TN788B) board using the **test board xxyy long** command.
3. Drop the call.
4. Find another available port, then:
   a. Busyout the port to which the endpoint was connected.
   b. Make another call to the same conference. If the problem corrects itself, then the previous port may be bad. If there are other VC boards with sufficient available ports to replace calls on the current VC, then pull the board that has the bad endpoint on it (the **status conference** command displays the encoder port associated with the call). The system will automatically reestablish the VC connections without dropping the call. If this fixes the problem, then replace the board, as it has at least one bad port. Reseating the board may temporarily fix the problem due to the hard reset done to the board.

Audio Echo

Echo in conference calls, particularly those with large delay characteristics, is totally disruptive. When Voice Activated Switching is taken into account, the effects are disastrous. Various arrangements of the microphone(s) and room speaker(s) may be needed.

For some Lucent Technologies Vistium endpoints, if an external speaker is attached or was attached when the system was last rebooted, this endpoint will cause audio echo throughout the conference. First, isolate the offending endpoint by asking each endpoint to mute, one at a time, until the echo disappears.

If the input from an endpoint is located too close to the speakers of an endpoint, then acoustic echo is created. The microphone must be moved away from the speakers.

Normally, if any microphone in the room is moved relative to the speakers, that site will cause echo until the echo canceller in the codec retrains itself, some will require a manual reset. If a PictureTel keypad is configured with external microphones connected to the keypad, then the internal microphone and external microphone(s) “sing” to each other if the “ext mic” bat switch is set to “int mic” on the back of the keypad. In this configuration, VAS locked on that site, and the acoustic “singing” was inaudible.

Rate Adaptation

Because of a lack of a clear explanation in standards, sometimes endpoints do not work well with each other and the DEFINITY MMCH. The MMCH will only allow a conference to downgrade from 64kbps to 56 kbps operation on conferences that have the `Rate Adaptation` flag set to `y`.

When a downgrade does occur, information on the Status Conference form indicates the success or failure of the 64kbps-endpoints that are participants to properly rate adapt to 56kbps. As a general indication that the conference has rate adapted, the `Conference Transfer Rate` and `Effective Transfer Rate` fields show initial and current transfer rates, respectively. For each 64-kbps endpoint the column that indicates `Rate Adapt` shows an n if the endpoint did not follow the procedures as specified by the H.221. If an endpoint shows `y`, it did successfully rate adapt. If an endpoint shows `c`, it joined the conference at 56kbps.

Once the conference rate adapts, the endpoints that do not properly follow suit, will become audio-only endpoints. A conference will not rate adapt from 56 kbps back to 64 kbps until all endpoints disconnect from the conference and it idles.

The PictureTel 1000 Release 1.1C, PictureTel 6.01 software, and the Vistium 2.0 software successfully rate adapt with the MCU. External rate adaptation techniques used by VTEL and CLI are known to cause problems with the endpoint when used with this feature.

Endpoint or I-MUX in Loopback Mode

Some endpoints have a loopback enable feature. This makes DEFINITY MMCH data loopback at the MMCH when a connection is in progress. The loopback can be enabled prior to or during a connection.

The MMCH does not detect the loop and continues to VAS. In most scenarios, the switch occurs, but within a few seconds, the broadcaster's return video becomes its own image. Once the broadcaster stops speaking, the system "false" switches to an apparently random port that was not speaking.

TN760D Tie Trunk Option Settings

The TN760D Tie Trunk circuit pack interfaces between 4 tie trunks and the TDM bus. Two tip and ring pairs form a 4-wire analog transmission line. An E and M pair are DC signaling leads used for call setup. The E-lead receives signals from the tie trunk and the M-lead transmits signals to the tie trunk.

To choose the preferred signaling format (Table 1-8 and Table 1-9), set the switches on the TN760D and administer the port using Figure 1-31 and Table 1-10.

Table 1-8. Signaling Formats for TN760D

Mode	Type
E & M	Type I Standard (unprotected)
E & M	Type I Compatible (unprotected)
Protected	Type I Compatible, Type I Standard
Simplex	Type V
E & M	Type V
E & M	Type V Revised

Table 1-9. Signaling Type Summary

	Transmit (M-Lead)		Receive (E-Lead)	
Signaling Type	On-Hook	Off-Hook	On-Hook	Off-Hook
Type I Standard	ground	battery	open[1]/battery	ground
Type I Compatible	open[1]/battery	ground	ground	open[1]/battery
Type V	open[1]/battery	ground	open	ground
Type V Reversed	ground	open	ground	open

1. An open circuit is preferred instead of battery voltage.

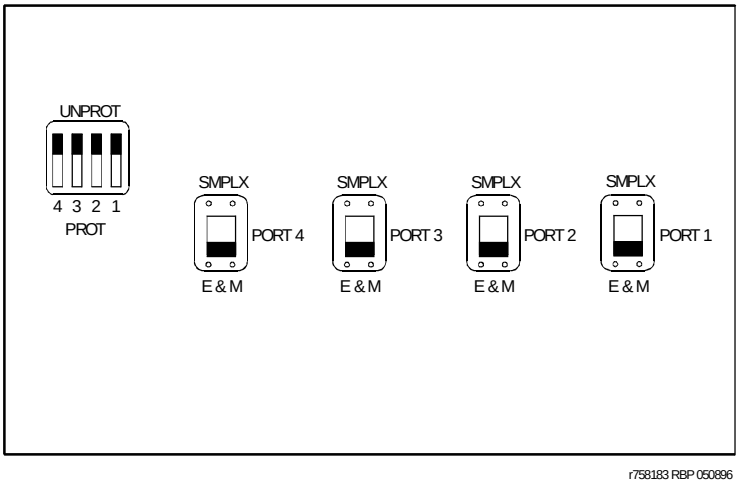

Figure 1-31. TN760D Tie Trunk Circuit Pack (Component Side)

Table 1-10. TN760D Option Switch Settings and Administration

Installation Situation		Preferred Signaling Format		E&M/SMPLX Switch	Prot/Unprot Switch	Administered Port
Circumstance	**To**	**System**	**Far-End**			
Co-Located	DEFINITY	E&M Type 1 Compatible	E&M Type 1 Standard	E&M	Unprotected	Type 1 Compatible
Inter-Building	DEFINITY	Protected Type 1 Compatible	Protected Type 1 Standard Plus Protection Unit	E&M	Protected	Type 1 Compatible
Co-Located	Net Integrated	E&M Type 1 Standard	Any PBX	E&M	Unprotected	Type 1

TN464E/F Option Settings

The TN464E/F DS1/E1 Interface - T1/E1 circuit pack interfaces between a 24- or 32-channel Central Office/ISDN or tie trunk and the TDM bus.

Set the switches on the circuit pack to select bit rate and impedance match. See Table 1-11 and Figure 1-32.

Table 1-11. Option Switch Settings on TN464E/F

120 Ohms	Twisted pair
75 Ohms	Coaxial requiring 888B adapter
32 Channel	2.048 Mbps
24 Channel	1.544 Mbps

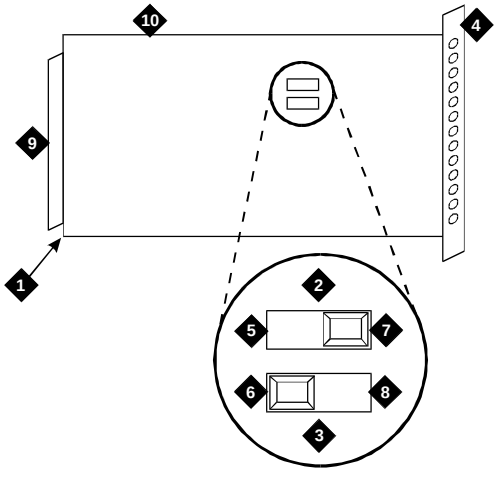

Figure Notes

1. Backplane Connectors
2. 24/32 Channel Selector
3. 75/120 Ohm Selector
4. Faceplate
5. 32 Channel
6. 120 Ohm (shown selected)
7. 24 Channel (shown selected)
8. 75 Ohm
9. Connector
10. TN464E/F

Figure 1-32. TN464E/F Option Settings

Troubleshooting Multimedia Call Handling (MMCH)

Before troubleshooting any problems associated with the DEFINITY MMCH, always be sure that the endpoint is operating correctly (audio, video, and data) by making point-to-point test calls. If possible, make the test calls over the network to test the connectivity and routing of network calls from the endpoint. This eliminates problems such as disconnected audio or video cables and network troubles.

64 Kbps Calls Terminate but Far End Receives 56 Kbps Indication

Description

Some 2x64 Kbps conferences on the DEFINITY MMCH do not establish because of framing, audio, or video problems.

For calls that are routed in the network through a Lucent Technologies/LEC interface, the originating equipment may launch a 64 Kbps call attempt, and the far end receives either a 56 Kbps or 64 Kbps indication. If the far end receives a 64 Kbps indication, the call may have used 56 Kbps facilities. If so, the call may exhibit any of the following conditions:

- No handshaking in one direction or both (call disconnects after timeouts)
- Call connects, but audio or video is corrupted (audio noise or no video)
- Call succeeds without disruption (this is the least likely since one endpoint must be aware that the call is really 56 Kbps to connect)

If any of the above conditions occur, then 64 Kbps calls from the site are blocked.

Solution

Administer the conference for connection at 56 Kbps.

Calls Terminate with No Audio

Description

To support endpoints that do not support Multipoint Command Conference (MCC), the DEFINITY MMCH changes its capability set and initiates a capability set exchange with the endpoint when the Selected Communications Mode (SCM) changes. If the endpoint does not follow the SCM audio mode, the MCU may include the endpoint as a secondary (audio only) endpoint. If the endpoint sends an unknown or unsupported audio mode, then the TN788B decoder port mutes the endpoint from the conference. The user may hear the conference but may not be heard by other parties in the conference.

Solution

1. Use the Status Conference x form and check the Audio Mode field for the current operating mode of the conference.
2. Another indication of the audio modes is in the “Incoming Mode Commands from Endpoint and Outgoing Commands from MMI” on page 3 of the Status Conference x Endpoint y form. Check the `Audio` fields under the Mode Commands/Communication Modes section of the form.

Some Parties Cannot Be Heard by Others (Audio Subsetting)

Description

Problems where varying subsets of the conference hear different things may have problems with the various summing resources/groups that are in use. Traditionally theses faults are caused by the SPE not cleaning up the connections properly. Isolation and diagnosis should focus on the VC resources in use by that conference.

Solution

1. Use the **status conference** command to list the VC resources in use by this conference. Try a hot replacement of any VC boards in use, which refreshes the VC translations and move all of the audio connections to different VC ports.
2. If the problem still exists, try dropping the conference and then bringing the conference back up again. Not only does this refresh VC translations, but uses different timeslots as well.
3. If the problem still exists, suspect a hardware problem. If practical, wait for the DEFINITY MMCH to be idle (no active conferences), and then check the circuit packs for active (yellow) LEDs. If any of these are unexpected, such as on a VC board, try replacing the board and then bringing the conference up again.

Calls Terminate with No Video

Description

Generally, loss of video can be divided into 2 types. The first occurs when the DEFINITY MMCH switches to the endpoint, but nobody sees them. The receivers see either “black” video or a frozen image of the previous speaker depending on the codec of the manufacturer. The type occurs when the DEFINITY MMCH does not switch to an endpoint.

Solution

In the first type described above, wiring problems, power to the camera, or video encoder circuit pack problems in the codec are typical causes.

In the second type, no video from an endpoint typically occurs because it is not a valid video source. This can be checked by looking at page 1 of the Status Conference x Endpoint y Vid form under the Capability section. In this section, a “y” or “c” suggests that the endpoint has video. An “e” means ept has not declared any video capability in cap set, “n” is audio only, and “blank” means audio add-on.

Also check page 1 of the Status Conference x Endpoint y Vs form for indication of the video state for the endpoint values.

Calls Terminate Correctly but Are Unstable

Description

A number of conditions will lead to some or all endpoints having stability problems during the course of a conference. A lack of stability from an endpoint is noticeable by a lack of a video switching while the party is the only talker or excessive disconnects from that endpoint.

Synchronization

Generally, the most common problem is a mismatch in synchronization sources between the endpoint and the DEFINITY MMCH. This typically causes low-level (Px64) handshake problems that can trigger the endpoint/MMCH to disconnect the call. The MCCH’s timers are set to sufficiently high values so that, normally, the endpoint will timeout and disconnect first. If installed in a customer network, it is a good idea to perform an audit of the path synchronization is being supplied. If there are different clock sources between endpoints and the DEFINITY MMCH, some problems are sure to occur. The severity of these problems can range from a handshake failure every few seconds to one per day. Depending on the type of endpoint, this can cause the endpoint to disconnect or just freeze video until the main problem is resolved.

Specifically, PictureTel System 4000 endpoints seem to be the most sensitive to instability. The Lucent Technologies Vistium also disconnects fairly infrequently. Last, the CLI Rembrandt II VP freezes video and waits for framing to be recovered.

Network Configuration Concerns with Synchronization

When auditing a network for synchronization, avoid unnecessary hops. Thus, a switch providing star-configuration synchronization is preferred over a daisy-chain configuration. Additionally, if there are DEFINITY PBXs that have

EPNs, synchronization should be provided to sub nodes from the same port network through which the PBX receives its synchronization. Passing synchronization through the PBX Expansion Interface adds an unnecessary hop to the path and creates another potential point of failure.

Expansion Interface Duplication

If a customer's network uses PBX EPNs with duplicated Expansion Interfaces, scheduled switching of the Expansion Interface links should be disabled on the PBX via **change system-parameters maintenance**. When scheduled maintenance runs and switches the links, there is a brief corruption of the data path. If endpoints have active calls when the switch occurs, this corruption of the data path causes Px64 handshake problems, which lead to the endpoints losing video source status, and sometimes disconnecting as described above. Disabling the EI switching is in the customer's best interest to prevent the disruption of the Px64 data stream. The customer will get the same level of alarm indications and maintenance on the EI links, regardless of the status of scheduled switching.

PRI D-Channel Backup

A somewhat unlikely source of call stability problems occur where the translations for PRI D-channel Backup between two non-MCU switches were incorrect. As an example, on switch A, DS1 1A10 was designated as the primary source, and on switch B, the corresponding DS1 was designated as the secondary source. When scheduled maintenance was run on the switch that had an active standby D-channel, an audit disconnected some calls using the link. The problem was corrected when the D-channel primary/secondary assignments matched.

Processor Duplication on the PBX

Do not enable the PI link switch on scheduled maintenance. This can cause link stability problems on the Accunet Bandwidth Controller (ABC).

Voice-Activated Switching Problems

Voice-activated switching on the DEFINITY MMCH does not follow the loudest talker. The MMCH queues all speaking parties and selects a new video broadcaster (the second-oldest speaking party) when the oldest speaking party has stopped talking. The new broadcaster will see the last speaker as its video. The system can also "learn" about the noise coming from an endpoint to help prevent false switches, adapting both to noise level and repetitive sounds such as a fan. This adaptation occurs over approximately 10 seconds.

No Switching, Full Motion Video

If a room is excessively noisy, the DEFINITY MMCH may receive sufficient audio signal to conclude that there is a speaker present. Use the Status Conference x form to determine if the MMCH thinks an endpoint is talking. The MMCH sets the `Ts` field to `t` for each endpoint if there is voice energy detected. This endpoint may have to mute when nobody at the site is speaking to allow the conference to proceed normally. Remind the customer that it may be necessary to mute if a side conversation is going on in the background, just as one would do in an audio conference. If the system does not switch broadcasters even after the current broadcaster has muted, check the conference administration using the **display conference X** command to ensure that the conference is in voice-activated mode. Also verify that parties who were speaking are valid video sources as described in the "Calls Terminate with No Video" section above.

The See-Me feature (MCV) can also cause VAS to "lock-up." An endpoint can activate MCV to force their site to become the broadcaster. If they do not disable the feature when finished, the system remains in this mode indefinitely. Beginning with Release 3.0, the **status conference X** command shows that MCV is in effect by displaying `av` in the Video Status (Vs) column. Page 3 of the Status Conference X Endpoint Y form also has a `Broadcaster` field that indicates MCV is in effect with (SEE-ME) as the broadcaster. The same scenario can occur in a CHAIR or UCC-controlled conference with a designated broadcaster. In this situation the CHAIR/UCC has not released the designated broadcaster and returned to VAS mode. If there is a UCC-designated broadcaster, **status conference X** indicates a Video Status of u. Also, for UCC rollcall the return video may appear to be stuck. Check the Video Status for an "R," indicating rollcall.

If none of the examples above appears to be the cause, and if the room was quiet, all speakers are valid video sources, the conference is voice-activated, and the speaker can be heard, then escalate the problem.

Video Never Switches to a Particular Party

Description

Verify that the endpoint is a valid video source as described in the "Calls Terminate with No Video" section above. If it is, then the audio from the endpoint may not have sufficient voice signal for the hardware to determine the parties at the endpoint are speaking. Check the `Talk` field on page three of the Status Conference X Endpoint Y form to see if the `talking bit` is `y`. Next, check the audio by standing adjacent to the microphone and speaking at a normal level.

Solution

If the audio is not muffled:

1. Use the **status conference** command to determine which port on the TN788B (VC board) is connected to this endpoint.

2. Check the VC (TN788B) board using the **test board xxyy long** command.
3. Drop the call.
4. Find another available port, then:
   a. Busyout the port to which the endpoint was connected.
   b. Make another call to the same conference. If the problem corrects itself, then the previous port may be bad. If there are other VC boards with sufficient available ports to replace calls on the current VC, then pull the board that has the bad endpoint on it (the **status conference** command displays the encoder port associated with the call). The system will automatically reestablish the VC connections without dropping the call. If this fixes the problem, then replace the board, as it has at least one bad port. Reseating the board may temporarily fix the problem due to the hard reset done to the board.

Audio Echo

Echo in conference calls, particularly those with large delay characteristics, is totally disruptive. When Voice Activated Switching is taken into account, the effects are disastrous. Various arrangements of the microphone(s) and room speaker(s) may be needed.

For some Lucent Technologies Vistium endpoints, if an external speaker is attached or was attached when the system was last rebooted, this endpoint will cause audio echo throughout the conference. First, isolate the offending endpoint by asking each endpoint to mute, one at a time, until the echo disappears.

If the input from an endpoint is located too close to the speakers of an endpoint, then acoustic echo is created. The microphone must be moved away from the speakers.

Normally, if any microphone in the room is moved relative to the speakers, that site will cause echo until the echo canceller in the codec retrains itself, some will require a manual reset. If a PictureTel keypad is configured with external microphones connected to the keypad, then the internal microphone and external microphone(s) “sing” to each other if the “ext mic” bat switch is set to “int mic” on the back of the keypad. In this configuration, VAS locked on that site, and the acoustic “singing” was inaudible.

Rate Adaptation

Because of a lack of a clear explanation in standards, sometimes endpoints do not work well with each other and the DEFINITY MMCH. The MMCH will only allow a conference to downgrade from 64kbps to 56 kbps operation on conferences that have the `Rate Adaptation` flag set to `y`.

When a downgrade does occur, information on the Status Conference form indicates the success or failure of the 64kbps-endpoints that are participants to properly rate adapt to 56kbps. As a general indication that the conference has rate adapted, the `Conference Transfer Rate` and `Effective Transfer Rate` fields show initial and current transfer rates, respectively. For each 64-kbps endpoint the column that indicates `Rate Adapt` shows an n if the endpoint did not follow the procedures as specified by the H.221. If an endpoint shows y, it did successfully rate adapt. If an endpoint shows c, it joined the conference at 56kbps.

Once the conference rate adapts, the endpoints that do not properly follow suit, will become audio-only endpoints. A conference will not rate adapt from 56 kbps back to 64 kbps until all endpoints disconnect from the conference and it idles.

The PictureTel 1000 Release 1.1C, PictureTel 6.01 software, and the Vistium 2.0 software successfully rate adapt with the MCU. External rate adaptation techniques used by VTEL and CLI are known to cause problems with the endpoint when used with this feature.

Endpoint or I-MUX in Loopback Mode

Some endpoints have a loopback enable feature. This makes DEFINITY MMCH data loopback at the MMCH when a connection is in progress. The loopback can be enabled prior to or during a connection.

The MMCH does not detect the loop and continues to VAS. In most scenarios, the switch occurs, but within a few seconds, the broadcaster’s return video becomes its own image. Once the broadcaster stops speaking, the system “false” switches to an apparently random port that was not speaking.

Comcodes for Release 6.2csi

Table 1-12 lists the comcodes for equipment used with Release 6.2 CMC.

Table 1-12. Comcodes for Release 6.2csi

Comcode	Description
847951662	Left Panel
847951670	Right Panel
847960002	Processor Interface Cable
407633999	U.S. Robotics Model 839 External Modem
105631527	TDM/LAN Bus Terminator (AHF110)
	Vertical TDM/LAN Bus Cable (WP-91716 List 8)
	Horizontal TDM/LAN Bus Cable (WP-91716 List 9)
407780501	Single-Point Ground Block
847987187	CMC 110 Cross-Connect Assembly (Main Distribution Frame)
407676691	120 VAC Power Distribution Unit (145D 6-AC)
847951605	Fan Assembly
407745009	Fan Air Filter
405362641	120 VAC Power Cable
106278062	Apparatus Blank (Circuit Pack Blank) (158P)
106606536	Integrated Channel Service Unit (ICSU) (120A2)
107988867	DS1 Loopback Jack (T1 Only) (700A)
107152969	75 Ohm DS1 Coaxial Adapter (888B)
403613003	157B Connecting Block
406948976	6SCP-110 Protector
107435091	507B Sneak Current Fuse Panel
407216316	220029 Sneak Current Fuse
403613003	157B Connecting Block
103970000	Main Distribution Frame Label (Code 220A)
847489895 or 847489903	6-pin mini DIN to RJ-11 jack to allow 715 BCS keyboard on 2900/715 Terminal
407536531	9-pin DTE to 25-pin DCE Adapter Cable for a 715 BCS-2 Terminal
104307327	C6C cable — 50-foot (15.2 m) shielded DS1 cable with 50-pin male to 15-pin male

Continued on next page

Table 1-12. Comcodes for Release 6.2csi — *Continued*

Comcode	Description
104307376	C6D cable — 50-foot (15.2 m) shielded DS1 cable with 50-pin male on each end
104307434	C6E cable — 100-foot (30.5 m) shielded DS1 cable with a 50-pin male to 50-pin female
104307475	C6F cable — 50-foot (15.2 m) shielded DS1 cable with 50-pin male to 3 inch (7.62 cm) stub
102381779	3B1A Carbon Block
104410147	3B1E-W Wide Gap Gas Tube
105514756	3C1S Solid State
102904893	4B1C Carbon Block with Heat Coil
104401856	4B1E-W Wide Gap Gas Tube w/Heat Coil
104386545	4C1S Solid State with Heat Coil
406948976	SCP-110 Sneak Current Protector
407216316	220029 Fuse Sneak Current Protector
105581086	4C3S-75 Solid State with Heat Coil
406144907	ITW LINX Gas Tube, Avalanche Suppress
901007120	ITW Linx Ground Bar (used with above)
406304816	ITW Linx Replacement Fuse
103972758	Data Link Protector (1 circuit)
103972733	Data Link Protector (8 circuits)
407063478	Electrostatic Discharge (ESD) Wrist Strap
107731853	Single-Mode Fiber Optic Transceiver (300A)
106455348	Multi-Mode Fiber Optic Transceiver (9823A)
106455363	Multi-Mode Fiber Optic Transceiver (9823B)
407439975	Multi-mode Fiber Interconnect Cable (20 Feet (6.1 m)
407598325	Single-mode Fiber Interconnect Cable (20 Feet (6.1 m)
105357727	Single-mode Fiber Optic Patch Cord (2 Feet (0.6 m)
106060718	Single-mode 5dB Attenuator
106060734	Single-mode 10dB Attenuator

Table 1-13. Circuit Pack and Auxiliary Equipment Classifications

Analog Line (8)	2-Wire Digital & Analog Line (16)	Data Line & Digital Line 4-Wire	Digital Line 2-Wire 24 Ports	Hybrid Line	MET Line	AUX Trunk	Central Office Trunk	Central Office Trunk 3-Wire	DID / DIOD Trunk	Tie Trunk	DS1 Tie Trunk	Packet Data Line	Four Port DIOD
TN467	TN2149	TN726B	TN2224	TN762	TN735	TN417	TN429	TN2199	TN429	TN478	TN483	TN553	TN2184
TN432	TN2135	TN754B		TN762B		TN763	TN493		TN2139	TN458	TN722		
TN431	TN468B	TN564B				TN763D	TN422		TN459B	TN449	TN767		
TN411B	TN448	TN413					TN421		TN436B	TN760D	TN722B		
TN742	TN746						TN438B		TN753	TN760C	TN464F		
TN769	TN746B						TN447		TN2146	TN434			
	TN2181						TN465C		TN414	TN415			
	TN2183						TN747B						
							TN2138						
							TN2147C						
							TN2148						

1. DID means Direct Inward Dialing
2. DIOD means Direct Inward Outward Dialing
3. MET means Multibutton Electronic Telephone

Maintenance Commands for R6csi

2

This chapter provides additional trouble-clearing information for resolving both system-alarmed and user-reported troubles. This chapter supplements the information found in Chapter 3, ''Maintenance Objects for R6csi''. The maintenance commands are used to control, test, and obtain information associated with maintenance objects (MOs). The commands require the use of the administration terminal or remote Initialization and Administration System (INADS) interface and a valid login and password.

For Maintenance Objects and Maintenance Commands for the DEFINITY Wireless Business System (DWBS), refer to the appropriate maintenance documentation that accompanies the DWBS.

System Command Structure

System commands are standard words and phrases instructing the system to perform a specific function. The commands are arranged in a hierarchy of keywords; that is, enter 1 command to go to a different level. The commands contain 3 parts: ACTION, OBJECT, and QUALIFIER.

- ACTION is the first part of the command. When `command:` appears on the screen. The ACTION specifies the operation desired. Examples include **add**, **duplicate**, **change**, **remove**, **display**, **list**, and **save**.
- OBJECT is the second part of the command and specifies the particular object to be administered. Some typical entries are **hunt-group**, **coverage path**, and **station**.
- QUALIFIER is the last part of the command. It is 1 or more words or digits used to further identify or complete the OBJECT. For example, **hunt group *15*** or ***station 3600***, where ***15*** and ***3600*** are qualifiers.

NOTE:
Qualifiers are printed in this typeface.

An example of the command line required to add a station with extension number *1234* is **add station *1234***. In this example, **add** is the ACTION, **station** is the OBJECT, and ***1234*** is the QUALIFIER. In the command line, spaces are required between the ACTION, OBJECT, and QUALIFIER.

To save time, enter enough letters for each part of the command to make it unique. For example, if you want to enter the command **change system-parameters country-options**, typing **cha sys coun** is sufficient.

NOTE:
The craft login may not be allowed to perform some of the steps needed to initialize the system. If access is denied to some of these procedures, contact your Lucent Technologies representative for assistance.

Getting Help

Use the Help key for a list of options and the Cancel key to back out of any command.

busyout access-endpoint

This command is destructive. This command is used to busyout a specified access endpoint.

Action/ Object	Qualifier	Qualifier Description	Permissions	Defaults	Feature Interactions
busyout access-endpoint	***extension***	Extension number of access endpoint (per dial-plan) Examples: **busyout access-endpoint 25012** **busyout access-endpoint 77868**	init inads craft nms	none	See below

Feature Interactions

- If there is an active call on the specified access endpoint, the call to drop.

Output

The following example shows the output for the **busyout access-endpoint 22502** command and assumes that access endpoint ports for extension 22502 are in cabinet 1, carrier C, slot 11, circuit 1 to 6. The responses display on a test-by-test basis with one line of data for each test result.

```
busyout access-endpoint 22502                          SPE A

                            COMMAND RESULTS

  Port     Maintenance Name  Alt. Name   Result       Error Code
  01C1101    WAE-PORT         22502       PASS
  01C1102    WAE-PORT         22502       PASS
  01C1103    WAE-PORT         22502       PASS
  01C1104    WAE-PORT         22502       PASS
  01C1105    WAE-PORT         22502       PASS
  01C1106    WAE-PORT         22502       PASS


Command Successfully Completed
```

Field descriptions

`Port`	Port address (cabinet-carrier-slot-circuit)
`Maintenance Name`	Name of maintenance object (WAE-PORT = wideband access endpoint; TIE-DS1 = single port access endpoint)
`Alt. Name`	The alternate way of identifying the maintenance object, in this case, the extension number of the access endpoint.
`Result`	Test result: Pass, Fail, Abort
`Error Code`	Numeric code explaining why the release failed or aborted. Refer to the detailed list of the codes by test number for each MO.

busyout board

This command puts all the ports associated with the specified access endpoint in a maintenance busy (craft busy) state. No periodic or scheduled tests are performed on the busied out access endpoint ports until they are released. When the access endpoint ports are maintenance busy, the access endpoint is removed from active service on the switch, meaning that no call processing activity can include the busied objects because terminals on the administered ports do not receive dial-tone. Warning alarms are generated on each busied out port in the access endpoint. The **release access-endpoint** command returns all the ports associated with the specified access endpoint to operation.

WARNING:
This command is service disrupting and may cause extraneous alarms.

Action/Object	Qualifier	Qualifier Description	Permissions	Defaults	Feature Interactions
busyout board	***location***	Board address (**PCSSpp**) Examples: **busyout board 01c11** **busyout board 02c15**	init inads craft	none	None

Output

The following example shows the output from the **busyout board 1c07** command, and assumes that board in cabinet 1, carrier c, slot 7 is an analog board with three administered ports. The responses display on a test-by-test basis with one line of data for each test result.

```
busyout board 01C07                                SPE A

                              COMMAND RESULTS

  Port     Maintenance Name  Alt. Name   Result       Error Code
  01C07      ANL-BD                      PASS
  01C0702    ANL-LINE                    PASS
  01C0701    ANL-LINE          51001     PASS
  01C0703    ANL-LINE                    PASS


Command successfully completed
```

Field descriptions

`Port` Port address (cabinet-carrier-slot-circuit)

`Maintenance Name` The name of maintenance object

`Alt. Name` Alternate way to identify maintenance objects.

If the Object is	The field contains
station	extension
trunk	*xxx/yyy* (where *xxx* = trunk group number and *yyy* = member number)
private CO line	*P/xxx* (where *xxx* = private CO line group number)

`Result` Test result: Pass, Abort, or Fail

`Error Code` Numeric code explaining why the release failed or aborted. Refer to the detailed list of the codes by test number for each MO.

busyout cdr-link

This command will busyout a maintenance object associated with the specified call detail recording (cdr) link.

Action/Object	Qualifier	Qualifier Description	Permissions	Defaults	Feature Interactions
busyout cdr-link	***link-id***	Link identifier (primary or secondary) Examples: **busyout cdr-link primary** **busyout cdr-link secondary**	init inads craft nms	Primary	None

Output

The following example shows the output from the **busyout cdr-link primary** command.

```
busyout cdr-link primary                                SPE A
                            COMMAND RESULTS

  Port    Maintenance Name  Alt. Name   Result       Error Code
  1        CDR-LNK                      PASS

Command successfully completed
```

Field descriptions

`Port` — Port address (cabinet-carrier-slot-circuit); 1 = primary, 2 = secondary link

`Maintenance Name` — The name of maintenance object

`Alt. Name` — Alternate way to identify maintenance objects.

If the Object is	The field contains
station	extension
trunk	*xxx/yyy* (where *xxx* = trunk group number and *yyy* = member number)
private CO line	*P/xxx* (where *xxx* = private CO line group number)

`Result` — Test result: Pass, Abort, or Fail

`Error Code` — Numeric code explaining why the release failed or aborted. Refer to the detailed list of the codes by test number for each MO.

busyout data-module

This command puts the specified data module in a maintenance busy state, even uninstalled data modules. No periodic or scheduled tests is performed on the busied out data module or data channel until it is released and no call processing can be executed on the data modules or over the data channels. Warning alarms are generated (error type 18) on each maintenance object busied out, so that INADS can access the state of the objects. The **release data module** command returns the specified data module (or data channel) to operation.

On a system with the duplication option, a busyout of a Network Control Data Channel (DATA-CHL) or a Processor Interface Port Data Channels (PI-PT) are preserved across SPE interchanges. The data channel extension must be released before the data channel can be brought back into service.

Action/Object	Qualifier	Qualifier Description	Permissions	Defaults	Feature Interactions
busyout data-module	***extension***	Extension number (per dial-plan) Example: **busyout data-module 31300**	init inads craft nms	None	None

Output

The following example shows the output from the **busyout data-module 300** command.

```
busyout data-module 300                          SPE A

                            COMMAND RESULTS

  Port     Maintenance Name  Alt. Name   Result       Error Code
  01C1103    DIG-LINE         300         PASS

Command successfully completed
```

Field descriptions

`Port`	Port address (cabinet-carrier-slot-circuit) or the data channel number
`Maintenance Name`	The name of maintenance object
`Alt. Name`	Alternate way to identify maintenance objects.

If the Object is	The field contains
station	extension
trunk	*xxx/yyy* (where *xxx* = trunk group number and *yyy* = member number)
private CO line	*P/xxx* (where *xxx* = private CO line group number)

`Result`	Test result: Pass, Abort, or Fail
`Error Code`	Numeric code explaining why the release failed or aborted. Refer to the detailed list of the codes by test number for each MO.

busyout journal-printer

This command puts the maintenance object associated with a specified pms-log or wakeup-log link in a maintenance busy state. No periodic or scheduled tests are performed on the busied out maintenance object until it is released. Also, no activity occurs over the links (that is, no data transferred to the printer) and the link is dropped. Warning alarms are generated (error type 18) on each maintenance object busied out, so that INADS can access the state of the objects. The **release journal-printer** command returns the object to operation.

A link is comprised of several components: a far end data module, a simulated data channel on the processor board, a manager that initiates and maintains the link, and a controller/protocol that services the link. A controller/protocol is usually a transient process that exists for as long as the link is up. A link is considered up if a physical connection is established. A link can be considered to be up while no useful work can be performed over it, in this case the link is insane and should be torn down. These links provide asynchronous data connections from the switch to peripherals.

For general information on journal printer links, see the description of the "busyout pms-link" command.

For information on what a journal printer is and does, see the description of the "status journal-link" command.

Action/Object	Qualifier	Qualifier Description	Permissions	Defaults	Feature Interactions
busyout journal-printer	***pms-log***	Link to pms (in output, port name for pms link =1)	init inads craft nms	None	See below
	wakeup-log	Link to the wakeup logging facility (in output, port name = 0)			
		Examples: **busyout journal-printer pms-log** **busyout journal-printer wakeup-log**			

Feature Interactions

Maintenance of a particular component on a link sometimes interferes with the maintenance of the link itself. For example, maintenance can put a link component in a busy state causing link set-up to fail. Frequent attempts at re-setup of a link may delay the recovery of a faulty component, due to the maintenance test of a component only taking place when the component is idle. Therefore, disable the attempted re-setup of a link with the busyout command and the link will remain intact. If the link is already down, the busyout command stops periodic re-setup attempts on the link.

Output

The following example shows the output for the **busyout journal-printer wakeup-log** command.

```
busyout journal-printer wakeup-log                    SPE A

                            COMMAND RESULTS

  Port    Maintenance Name  Alt. Name   Result       Error Code
  0       JRNL-LINK                     PASS

Command successfully completed
```

Field descriptions

`Port`	Physical object port address: `0` = wakeup log, `1` = pms log
`Maintenance Name`	The name of the maintenance object
`Alt. Name`	Not applicable
`Result`	Test result: Pass, Abort, Fail
`Error Code`	Numeric code explaining why the release failed or aborted. Refer to the detailed list of the codes by test number for each MO.

busyout link

This places maintenance objects associated with a specified link in a maintenance busy state. No periodic or scheduled tests are performed on the busied out maintenance objects until they are released. The link is marked out of service and is inaccessible to call processing. Warning alarms (error type 18) are generated on each busied out maintenance object, so that INADS can determine the state of the objects. The **release link** command reactivates the objects.

Action/Object	Qualifier	Qualifier Description	Permissions	Defaults	Feature Interactions
busyout link	***link-id***	Processor Interface circuit pack 1a1 or 1b1 = 1 – 4 Processor Interface circuit pack 1a2 or 1b2 = 5 – 8 Examples **busyout link 1**	init inads craft	none	none

Output

The following example shows the output from the **busyout link 1** command. The responses display on a test-by-test basis with one line of data for each test result.

```
busyout link 1                                SPE A

                            COMMAND RESULTS

  Port    Maintenance Name  Alt. Name   Result       Error Code
  01C0301   PI-LINK                     PASS

Command successfully completed
```

Field descriptions

`Port`	Port address/link-id
`Maintenance Name`	The name of the busied out maintenance object
`Alt. Name`	Not applicable
`Result`	Test result: Pass, Abort, Fail
`Error Code`	Numeric code explaining why the release failed or aborted. Refer to the detailed list of the codes by test number for each MO.

busyout mis

This command places a management information system in the maintenance busy state. No periodic or scheduled maintenance is performed on the busied out mis until it is released. When the object is busied out no call processing activity may be performed over the link. A warning alarm (error type 18) is generated on the busied out mis, so that INADS can determine its state. The command, **release mis**, reactivates the busied out mis.

Action/Object	Qualifier	Qualifier Description	Permissions	Defaults	Feature Interactions
busyout mis		Example: **busyout mis**	init inads craft cust rcust	None	None

Output

The following example shows the output from the **busyout mis** command. The responses display on a test-by-test basis with one line of data for each test result.

```
busyout mis                                SPE A

                        COMMAND RESULTS

  Port    Maintenance Name  Alt. Name   Result       Error Code
          MIS                           PASS

Command Successfully Completed
```

Field descriptions

`Port`	Not applicable
`Maintenance Name`	Name of busied out maintenance object: `MIS`
`Alt. Name`	Not applicable
`Result`	Test result: Pass, Abort, Fail
`Error Code`	Numeric code explaining why the release failed or aborted. Refer to the detailed list of the codes by test number for each MO.

busyout pms-link

This command places all maintenance objects associated with a property management system link in the maintenance busy state. No periodic or scheduled maintenance is performed on the busied out maintenance objects until they are released. When the object is maintenance busy the object is deactivated (no call processing activity may include the busied object) and the link is dropped. Warning alarms (error type 18) are generated on each busied out maintenance object, so that INADS can determine the state of the objects. The command, **release pms link**, reactivates the busied out objects on the link.

These links provide asynchronous data connections from switches to peripherals; they are composed of a:

- Far-end data module
- Simulated data channel
- Manager that initiates and maintains the link
- Controller/protocol that services the link

For information on PMS, see the description of the "status pms-link" command.

Action/Object	Qualifier	Qualifier Description	Permissions	Defaults	Feature Interactions
busyout pms-link		**Example:** **busyout pms-link**	init inads craft	none	See below

Feature Interactions

Maintenance of a particular component on a link sometimes interferes with the maintenance of the link itself. For example, maintenance can put a link component in a busy state causing link set-up to fail. Frequent attempts at re-setup of a link may delay the recovery of a faulty component, due to the maintenance test of a component only taking place when the component is idle. Therefore, disable the attempted re-setup of a link with the busyout command and the link will remain intact. If the link is already down, the busyout command stops periodic re-setup attempts on the link.

Output

The following example is a display of the **busyout pms-link** command.

```
busyout pms-link                                SPE A

                              COMMAND RESULTS

  Port    Maintenance Name  Alt. Name   Result       Error Code
            PMS-LINK                     PASS

Command Successfully Completed
```

Field descriptions

`Port`	Always blank
`Maintenance Name`	Name of maintenance object: `PMS-LINK`
`Alt. Name`	Not applicable.
`Result`	Test result: Pass, Abort, Fail
`Error Code`	Numeric code explaining why the release failed or aborted. Refer to the detailed list of the codes by test number for each MO.

busyout port

This command places the specified port on a circuit pack in a maintenance busy state. No periodic or scheduled tests are performed on the busied out port until it is released. When the object is maintenance busy, it is deactivated (no call processing activity may include the busied object). Warning alarms (error type 18) are generated on each busied out maintenance object, so that INADS can determine the state of the objects. The command, **release port,** reactivates the administered port on a circuit pack at a specified location.

Action/Object	Qualifier	Qualifier Description	Permissions	Defaults	Feature Interactions
busyout port	***location***	Port address: **PCSS** marked port: **PPSSpp** Examples: **busyout port 01c1101** **busyout port 02c1501**	init inads craft	none	see below

Output

The following example is a display of the **busyout port** command.

```
busyout port 01C0701                                SPE A

                            COMMAND RESULTS

  Port     Maintenance Name  Alt. Name   Result       Error Code
  01C0701    ANL-LINE                     PASS

Command successfully completed
```

Field descriptions

Port	Port address (cabinet-carrier-slot-circuit)
Alt. Name	Alternate way to identify maintenance objects.

If the Object is	The field contains
station	extension
trunk	*xxx/yyy* (where *xxx* = trunk group number and *yyy* = member number)
private CO line	*P/xxx* (where *xxx* = private CO line group number)

Maintenance Name	Type of busied out maintenance object.
Result	Test result: Pass, Abort, Fail
Error Code	Numeric code explaining why the release failed or aborted. Refer to the detailed list of the codes by test number for each MO.

busyout pri-endpoint

This command places all PRI endpoint ports (B-channels) associated with the specified PRI endpoint in a maintenance busy (system technician busy) state. No periodic or scheduled tests are performed on the busied out PRI endpoint ports until they are released. When the PRI endpoint port is maintenance busy it is deactivated (no call processing activity may include the busied object). Warning alarms (error type???) are generated on each busied out port. The command, **release pri-endpoint,** reactivates all ports (B-channels) associated with the specified PRI endpoint extension and the switch attempts to negotiate with the far-end PRI terminal adapter to reactivate each PRI endpoint port (B-channel).

Action/Object	Qualifier	Qualifier Description	Permissions	Defaults	Feature Interactions
busyout pri-endpoint	***extension***	PRI endpoint extension number Examples: **busyout pri-endpoint 25012** **busyout pri-endpoint 77868**	init inads craft nms	none	If active calls resides on specified PRI endpoints, the busyout command drops the call. Once the PRI endpoint is maintenance-busy, call attempts from far-end PRI terminal adapters are denied with a cause value 17.

Output

```
busyout pri-endpoint 22501                          SPE A

                            COMMAND RESULTS

  Port     Maintenance Name  Alt. Name   Result       Error Code
  01B2001    PE-BCHL          22501       PASS
  01B2002    PE-BCHL          22501       PASS
  01B2003    PE-BCHL          22501       PASS
  01B2004    PE-BCHL          22501       PASS
  01B2005    PE-BCHL          22501       PASS
  01B2006    PE-BCHL          22501       PASS

Command Successfully Completed
```

Field descriptions

`Port`	Port address (cabinet-carrier-slot-circuit)
`Maintenance Name`	Type of busied out maintenance object: `PE-BCHL`
`Alt. Name`	Extension number of PRI endpoint
`Result`	Test result: Pass, Fail, Abort
`Error Code`	Numeric code explaining why the release failed or aborted. Refer to the detailed list of the codes by test number for each MO.

busyout sp-link

This command places the system printer link into a maintenance busy state. No periodic or scheduled maintenance is performed on the busied out system printer link until it is released. Warning alarms (error type 18) are generated on

each busied out maintenance object, so that INADS can determine the state of the object. Placing the system printer link in a busyout state blocks access to the system printer. The **release sp-link** command reactivates the system printer link.

Action/Object	Qualifier	Qualifier Description	Permissions	Defaults	Feature Interactions
busyout sp-link		Examples: **busyout sp-link**	init inads craft	none	none

Output

```
busyout sp-link                                SPE A

                            COMMAND RESULTS

  Port    Maintenance Name  Alt. Name   Result       Error Code
          SYS-PRNT                       PASS

Command Successfully Completed
```

Field descriptions

`Port`	Not applicable
`Maintenance Name`	Type of maintenance object that is busied out: `SYS-PRNT`
`Alt. Name`	Not applicable
`Result`	Test result: Pass, Abort, Fail
`Error Code`	Numeric code explaining why the release failed or aborted. Refer to the detailed list of the codes by test number for each MO.

busyout station

This command places the installed and uninstalled administered voice terminal extension (station) in a maintenance busy state. No periodic or scheduled tests are performed on the busied out station until it is released. When the object is maintenance busy it is deactivated (no call processing activity may include the busied object). Warning alarms (error type 18) are generated on each busied out maintenance object, so that INADS can determine the state of the objects. The command, **release station**, reactivates the specified voice terminal extension.

Action/Object	Qualifier	Qualifier Description	Permissions	Defaults	Feature Interactions
busyout station	***extension***	Extension number (per dial-plan) Examples: **busyout station 10020** **busyout station 32770**	init inads craft	none	none

Output

The following example is a display of the **busyout station** command.

```
busyout station 1002                                SPE A

                            COMMAND RESULTS

  Port     Maintenance Name  Alt. Name   Result       Error Code
  01C1102    DIG-LINE                     PASS

Command successfully completed
```

Field descriptions

`Port`	Port address (cabinet-carrier-slot-circuit)
`Maintenance Name`	Type of busied out maintenance object
`Alt. Name`	Alternate means to identify maintenance object: extension number
`Result`	Test result: Pass, Fail, Abort
`Error Code`	Numeric code explaining why the release failed or aborted. Refer to the detailed list of the codes by test number for each MO.

busyout tdm

The **busyout tdm** command places the specified tdm bus in a maintenance busy state. No periodic or scheduled tests are performed on the busied out bus until it is released. When the object is maintenance busy it is deactivated (no call processing activity may include the busied object). Warning alarms (error type 18) are generated on each busied out tdm bus, so that INADS can determine the state of the objects. The command, **release tdm**, reactivates the specified tdm bus.

Action/Object	Qualifier	Qualifier Description	Permissions	Defaults	Feature Interactions
busyout tdm	***pn number***	pn number = TDM bus Port Network number to be busied out.	init inads craft	none	If a bus is busied out, no calls are torn down. and no new calls are set up.
	bus	bus = ***a*** (default control bus) or ***b*** (default tone bus) specifies desired half of TDM bus. Each 512 time slot TDM bus configures as two duplicate 256 time slot buses. This division allows duplication of control channels and dedicated tone time slots. Examples: **busyout tdm 1a**			Dedicated tone time slots must be moved to another bus (the other half of the duplicated bus) before a busyout of a particular bus is allowed.

Output

The following example is a display of the **busyout tdm** command.

```
busyout tdm port-network 1 bus a                        SPE A

                          COMMAND RESULTS

  Port    Maintenance Name  Alt. Name   Result       Error Code
  PN 01A  TDM-BUS                        PASS

Command successfully completed
```

Field descriptions

`Port`	Port address and associated TDM number and bus (PNA or PNB)
`Alt. Name`	Not applicable
`Maintenance Name`	Type of busied out maintenance object: `TDM-BUS`
`Result`	Test result: Pass, Abort, Fail
`Error Code`	Numeric code explaining why the release failed or aborted. Refer to the detailed list of the codes by test number for each MO.

busyout tone-clock

The **busyout tone-clock** command places the specified tone/clock in a maintenance busy state. No periodic or scheduled tests are performed on the busied out object until it is released. When the object is maintenance busy it is deactivated (no call processing activity may include the busied object). Warning

alarms (error type 18) are generated on each tone clock circuit pack busied out, so that INADS can determine the state of the objects. The command, **release tone-clock**, reactivates the specified tone/clock.

Action/Object	Qualifier	Qualifier Description	Permissions	Defaults	Feature Interactions
busyout tone-clock	***location***	Physical location (**PCC**) Examples: **busyout tone-clock 01c** **busyout tone-clock 03d**	init inads craft	1 (one)	none

Output

The following example is a display of the **busyout tone-clock** command.

```
busyout tone-clock 1a                              SPE A

                            COMMAND RESULTS

  Port    Maintenance Name  Alt. Name   Result       Error Code
  01A     TONE-PT                       PASS
  01A     TDM-CLK                       PASS
  01A     TONE-BD                       PASS

Command successfully completed
```

Field descriptions

`Port`	Tone/clock board address (cabinet-carrier)
`Maintenance Name`	Circuit pack name: TONE-PT, TDM-CLK, TONE-BD
`Alt. name`	Not applicable
`Result`	Test result: Pass, Abort, Fail
`Error Code`	Numeric code explaining why the release failed or aborted. Refer to the detailed list of the codes by test number for each MO.

busyout trunk

The **busyout trunk** command places the specified installed or uninstalled trunk group or trunk group member in a maintenance busy state. No periodic or scheduled tests are performed on the busied out trunk groups or trunk group members until they are released. When the object is maintenance busy it is deactivated (no call processing activity may include the busied object). A single group member can be busied out by specifying the group and member number. All members in a trunk group can be busied out by specifying the trunk group

number. Warning alarms (error type 18) are generated on each busied out maintenance object, so that INADS can access the state of the objects. The **release trunk** command reactivates the specified trunk group or group member.

NOTE:
If the user enters **busyout trunk <group number>/**, the lowest port-location in the group is busied out. **This s NOT recommended.**

Action/Object	Qualifier	Qualifier Description	Permissions	Defaults	Feature Interactions
busyout trunk	***group***	Trunk group number (1–99)	init inads craft	none	none
	member	Number of a particular trunk within a trunk group (1 – 99) Examples: **busyout trunk 78** **busyout trunk 78/1**			

Output

The following example is a display of the **busyout trunk** command.

```
busyout trunk 78/1                                SPE A

                            COMMAND RESULTS

  Port     Maintenance Name  Alt. Name    Result       Error Code
  01C1505    CO-TRK           78/01        PASS

Command successfully completed
```

Field descriptions

`Port` Port address (cabinet-carrier-slot-circuit)

`Maintenance Name` Type of busied out maintenance object.

`Alt. Name` Alternate way to identify maintenance objects.

If the Object is	The field contains
station	extension
trunk	*xxx/yyy* (where *xxx* = trunk group number and *yyy* = member number)
private CO line	*P/xxx* (where *xxx* = private CO line group number)

`Result` Test result: Pass, Abort, Fail

`Error Code` Numeric code explaining why the release failed or aborted. Refer to the detailed list of the codes by test number for each MO.

cancel hardware-group

This command temporarily or permanently aborts the execution of a **test hardware-group** command. To resume testing, enter **resume hardware-group** or **test hardware-group**.

Action/Object	Qualifier	Qualifier Description	Permissions	Defaults	Feature Interactions
cancel hardware-group		Examples: **cancel hardware-group**	init inads	none	See below

Feature Interactions

- Scheduled and Periodic Maintenance

  When a **test hardware-group** is entered, all activity related to scheduled background maintenance, periodic background maintenance, and data audits suspends for the duration of the **test hardware-group** command. All activity related to scheduled background maintenance, periodic background maintenance, and data audits restarts if the **test hardware-group** command is canceled.

- Status Hardware-group

  The **status hardware-group** command displays the state of a canceled **test hardware-group** command as `canceled`.

change circuit-packs

This command allows users to administer circuit packs that are inserted into the system port, expansion control, and switch node carriers. It is used to configure the system when circuit packs are not physically inserted.

Action/Object	Qualifier	Qualifier Description	Permissions	Defaults	Feature Interactions
change circuit-packs	***cabinet number***	Cabinet number of circuit packs to change Examples: **change circuit-packs 1** **change circuit-packs 2**	init inads craft cust nms	1 (one)	none

Output

The following example is a display of page 1 of the **change circuit-packs 1** command when DEFINITY AUDIX is Administered by entering **TN566** in slot 8.

```
change circuit-packs 1                      Page   1 of   5

                        CIRCUIT PACKS
    Cabinet: 1                                Carrier: A
                                           Carrier Type: processor
 Slot Code  Sfx  Name                      Slot Code  Sfx  Name

  01: TN798      PROCESSOR                   11:
  02: TN2182     TONE/CLOCK                  12:
  03:                                        13:
  04:                                        14:
  05:                                        15:
  06: ADX8D      RESERVED-AUDIX-8D           16:
  07: ADX8D      RESERVED-AUDIX-8D           17:
  08: TN566      MULTI-FUNCTION              18:
  09: ADX8D      RESERVED-AUDIX-8D           19:
  10:                                        20:

  '#' indicates circuit pack conflict.
```

If **TN566** is entered for slot 8 and any of the 2 slots before it or 1 slot after it are occupied, the following error message displays:

```
Remove installed equipment from reserved 2 previous and 1
next slots
```

The following is an example of page 1 of the change circuit-packs form when MAPD is administered by entering **TN800**, **TN801**, or **TN802** in slot 7.

```
change circuit-packs 1                        Page   1 of   5

                         CIRCUIT PACKS
    Cabinet: 1                                Carrier: A
                                            Carrier Type: processor
 Slot Code  Sfx  Name                       Slot Code  Sfx  Name

  01: TN798      PROCESSOR                    11:
  02: TN2182     TONE/CLOCK                   12:
  03:                                         13:
  04:                                         14:
  05:                                         15:
  06: ADX8D      RESERVED-AUDIX-/CON          16:
  07: TN800      MAPD                         17:
  08: TN769      ANALOG LINE                  18:
  09: TN769      ANALOG LINE                  19:
  10: TN769      ANALOG LINE                  20:

  '#' indicates circuit pack conflict.
```

Field descriptions

Cabinet	Administered cabinet number
Cabinet Layout	Type of cabinet (single-carrier)
Carrier	In-use cabinet carrier
Carrier Type	Carrier function (port, processor, or expansion control)
Slot	Slot numbers (0 - 21).
Code	Circuit pack code (TN number) to identify the circuit pack type
Sfx	Lists the suffix, if applicable
Name	Alphanumeric circuit pack name

change synchronization

Each system contains a hierarchy of sources used for timing synchronization. DS1 inputs to the external stratum 3 clock affect stratum 3 synchronization hierarchy. Primary and secondary fields reflect Stratum 4 synchronization. If all fields are blank, the tone clock board within each PN provides timing for that PN.

Action/Object	Qualifier	Qualifier Description	Permissions	Defaults	Feature Interactions
change synchronization		Examples: **change synchronization** **change synch**	init inads craft cust rcust bcms	none	DS1 interface, BRI trunk, or UDS1 board selected as either a primary or secondary synch source cannot be removed on the DS1 circuit pack administration form or the regular circuit pack administration form.

Output/Input

The following example shows the output for the **change synchronization** command. “4” was entered in the stratum field.

```
change synchronization                        Page   1 of   1

              SYNCHRONIZATION PLAN

       SYNCHRONIZATION SOURCE (circuit pack location)
           Stratum: 4
           Primary: _____     Secondary: _____
Location  Name    Slip        Location  Name    Slip

 NOTE: DS1 and BRI trunk sources will result in stratum 4, type II
synchronization
```

The following example shows the output for the **change synchronization** command. “3” was entered in the stratum field.

```
change synchronization                        Page   1 of   1

              SYNCHRONIZATION PLAN

       SYNCHRONIZATION SOURCE (DS1 circuit pack location)
             Stratum: 3
        Port Network: 1
```

Field descriptions

`Stratum:` Current synchronization stratum (3, 4)

`Primary:` First choice system synchronization source (blank entry = no synchronization); field valid only if stratum 4 synchronization is specified.

`Secondary:`	Second choice system synchronization source (blank = no synchronization); valid if stratum 4 synchronization selected
`Location:`	Circuit pack location of all administered DS1 circuit packs (port network, carrier and board slot)
`Name:`	User-defined name for the DS1 circuit pack (blank = no user-defined name assigned)
`Slip:`	If DS1 circuit pack has slip alarm, `y`; if not, `n`.
`Port Network:`	Display-only field specifying the port network that supplies synchronization through the tone clock circuit pack (valid for stratum 3 synchronization)

change system-parameters maintenance

The **change system-parameters maintenance** command specifies and displays scheduled maintenance operations and maintenance support functions. It also activates and deactivates INADS alarm origination during repairs. To deactivate alarm origination:

1. Make a note of the current entries in the `Alarm Origination` and `CPE Alarm` fields so you can restore them later.
2. Change the `Alarm Origination to OSS Numbers` field to **neither**.
3. Change the `CPE Alarm Activation Level` field to **none**.
4. If daily scheduled maintenance must remain idle during a maintenance procedure, set the `Start Time` field to a time after the session ends. If daily Scheduled Maintenance is running and needs to be deactivated, set the `Stop Time` field to one minute after the current time.
5. Press Enter and verify that the screen displays the message:

   `Command successfully completed`

NOTE:
For earlier releases of system software, disable Cleared Alarm Notification and Restart Notification before submitting the form.

NOTE:
When finished working on the switch be sure to return all fields to their original settings.

Action/Object	Qualifier	Qualifier Description	Permissions	Defaults	Feature Interactions
change system-parameters maintenance		Examples: **change system-parameters maintenance**	init inads craft cust rcust	none	none

Output

The following output example shows a display of the **change system-parameters maintenance** command

```
change system-parameters maintenance                                Page   1 of 3
                    MAINTENANCE-RELATED SYSTEM PARAMETERS

OPERATIONS SUPPORT PARAMETERS
            Product Identification: 1000000000
        First OSS Telephone Number: 5551212           Abbrev Alarm Report? y
       Second OSS Telephone Number: 5551213           Abbrev Alarm Report? n
  Alarm Origination to OSS Numbers: both
        Cleared Alarm Notification? y                Suspension Threshold: 5_
              Restart Notification? y
           Test Remote Access Port? n
        CPE Alarm Activation Level: none
     Customer Access to INADS Port? n
       Repeat Dial Interval (mins): 7

SCHEDULED MAINTENANCE
                   Start Time: 22: 00                    Stop Time: 04: 00
           Daily Maintenance: daily              Save Translation: daily
 Control Channel Interchange: no        System Clocks Interchange: no
             SPE Interchange: no             EXP-LINK Interchange: no
```

```
  change system-parameters maintenance           Page 2 of 3

          MAINTENANCE-RELATED SYSTEM PARAMETERS

MAINTENANCE THRESHOLDS ( Before Notification )
  Minimum Threshold for TTRs: 4    Minimum Threshold for CPTRs: 1
  Minimum Threshold for Call Classifier Ports: _

TERMINATING TRUNK TRANSMISSION TEST (Extension)
  Test Type 100:        Test Type 102:         Test Type 105:

ISDN MAINTENANCE
   ISDN-PRI TEST CALL Extension: _____   ISDN BRI Service SPID: _____

DS1 MAINTENANCE
   DSO Loop-Around Test Call Extension: _____

LOSS PLAN (Leave Blank if no Extra Loss is Required)
   Minimum Number of Parties in a Conference Before Adding Extra Loss: _____

SPE OPTIONAL BOARDS
 Disk? y   Packet Intf1? y   Packet Intf2? n     Packet Intf3? n
```

```
  change system-parameters maintenance           Page 3 of 3

          MAINTENANCE-RELATED SYSTEM PARAMETERS

       Modem Connection: external
              Data Bits: 8
                 Parity: none

             Modem Name: usr

         RTS/CTS Enabled: &h1        Auto Answer Ring Count (rings): S0=10
  Asynchronous Data Mode: &m0                            Dial Type: T
     DTE Auto-Data Speed:               Adjustable Make/Break Ratio:
Disable Data Compression:                             Dial Command: D
    Enable Error Control:                       No Answer Time-out: S7=255
       Misc. Init. Param: ____________________



Help/Error Message Line
Command Line
```

Field descriptions

Operations Support Parameters

`Product Identification`

Identifies switch to an Operations Support System (OSS): 10-digit number starting with 1.

`First OSS Telephone Number`

Switch reports alarms first to the First OSS telephone number (for example, INADS or Trouble Tracker). The number must be obtained from the National Customer Support Center (NCSC) or the TSC. (# and ***** are not allowed in the telephone number.)

`Abbrev Alarm Report`

Enables the Abbreviated Alarm Report feature for the first OSS. (yes)

`Second OSS Telephone Number`

The switch reports alarms secondly to the second OSS telephone number. For example, INADS or DEFINITY SNMP. The number must be obtained from the National Customer Support Center (NCSC) or the TSC. (# and ***** are not allowed in the telephone number.)

`Abbrev Alarm Report`

Enables the Abbreviated Alarm Report feature for the second OSS. (no)

`Alarm Origination to OSS Numbers`

Indicates one of four options for alarm origination (neither):

`both` = Major and Minor alarms result in an automatic call to both administered OSS telephone numbers.

`first-only` = Major and Minor alarms result in an automatic call to the first administered OSS number.

`neither` = alarm origination does not occur; reports are not sent to either number.

`second no-backup` = Major and Minor alarms result in an automatic call to the first administered OSS telephone number. If calling the first OSS telephone number fails four times, the switch calls the second administered OSS telephone number until calling the first OSS telephone number is successful.

NOTE:
Before Release 5, the name of this field is `Alarm Origination Activated`.

If Alarm Origination is deactivated, Cleared Alarm Notification and Restart Notification deactivate, even though they may still be activated in the administration.

`Cleared Alarm Notification`

The switch originates calls to the OSS and sends an alarm resolution message once all previously-reported Major and Minor alarms are resolved. Activate Alarm Origination to enable Cleared Alarm Notification. (no)

`Restart Notification`

Enables the switch to originate calls to the OSS and report any system restarts caused by switch problems. Activate Alarm Origination to enable Restart Notification.

`Suspension Threshold`

Some problems cause alarms to be generated and resolved repeatedly. To detect these problems, the switch suspends Cleared Alarm Notification when it has reported the specified number of Cleared Alarm notifications in a 24 hour period. A suspended Cleared Alarm Notification reactivates with a successfully-completed “logoff” command, a system reset, or when the threshold is changed. This field is irrelevant if `Cleared Alarm Notification` or `Alarm Origination` are disabled. (1–15)

`Test Remote Access Port`

Indicates if remote access testing on the SYSAM circuit pack is active. This field should be set to **yes** when an INADS line is connected to the switch and a maintenance contract is in effect to maintain alarm origination capability.

If no equipment is connected to the remote access port, or if a trunk for remote access and alarm origination is not provided, running tests on the remote access port on the SYSAM results in test failures. This causes unnecessary maintenance alarms and allows potentially destructive tests to be run. To prevent this set this field to n**o**.

`CPE Alarm Activation Level`

Indicates the minimum level (Major, Minor or Warning) to activate Customer-Provided Equipment (CPE) alarm. If the level is **none**, the CPE does not activate for any alarm. (none)

NOTE:
When the switch goes into Emergency Transfer, the CPE alarm activates regardless of the CPE Alarm Activation Level setting.

`Customer Access to INADS Port`

To prevent customer login ID access to system administration and maintenance interface control, set this field to **no**. Lucent Technologies services has sole access to this field. (no)

`Repeat Dial Interval (MMS)`

Number of minutes that the system must wait before attempting another call origination to an OSS. Lack of a far-end acknowledgment triggers the timer.

Scheduled Maintenance

An automated series of maintenance tests and operations runs daily according to the schedule and settings specified in the following fields

`Start Time`

Hour and minute (24-hour notation) when daily scheduled maintenance starts

`Stop Time`

Hour and minute when scheduled daily maintenance ceases. If any daily maintenance operations are not completed by this time, the system notes its stopped sequence location and includes those operations during the next scheduled daily maintenance.

`Daily Maintenance`

This display-only field lists the standard test series run by maintenance software during daily maintenance.

`Save Translation`

Indicates days that translation data in memory automatically saves to the Mass Storage System disk and/or tape devices during scheduled maintenance. The operation saves to disk, then completes a backup to tape. (daily, days of the week, or no) “No” prevents automatic saves.

`Control Channel Interchange`

Each port network has a pair of TDM busses called A and B. Each has a set of time slots dedicated to the control channel. One bus (at a time) carries the control channel in each PN. (daily, days of the week, or no) “No” prevents interchanges. (no)

`System Clocks Interchange`

This field indicates the days that interchanges occur. (daily, days of the week, or no). “No” prevents interchanges. (no)

`SPE Interchange`

This field indicates the days SPE interchanges execute during scheduled maintenance, for duplicated SPE systems. (daily, days of the week, or no). “No” prevents scheduled interchanges. (no)

`EXP-LINK Interchange`

This field indicates if expansion links between port-networks interchange as part of scheduled maintenance. The value “no'' means that EXP-LINK interchanges do not automatically occur as part of scheduled maintenance. (no)

`Minimum Threshold for TTRs`

When the number of touch tone receivers (TTRs) in service falls below this number (4 to 200), a WARNING alarm is raised against TTR-LEV. These are also known as dual-tone multifrequency receivers (DTMRs). There are 4 TTRs on each TN748 Tone Detector circuit pack, and up to 50 TN748s in a system. To alarm the first occurrence of a TTR being taken out of service, set this field to 4 times the number of TN748s. If this number is set to more than three less than the total number of TTRs, a port network with only one TN748 could lose all of its TTRs before this alarm is raised.

`Minimum Threshold for CPTRs`

When the number of call progress tone receivers in service falls below this number (2 to 100), a WARNING alarm raises against TTR-LEV. These are also known as general purpose tone detectors (GPTDs). There are 2 CPTRs on each TN748 Tone Detector circuit pack, and up to 50 TN748s in a system. To alarm the first occurrence of a CPTR being taken out of service, set this field to 2 times the number of TN748s. If this number is set to more than one less than the total number of TTRs, a port network with only one TN748 could lose all of its CPTRs before this alarm is raised.

`Minimum Threshold for Call Classifier Ports`

When the number of call classifier ports (CLSFY-PTs) in service falls below this number, a WARNING alarm is raised against TTR-LEV. Valid entries are 1 to 200. There are 8 ports on each TN744 Call Classifier circuit pack, and up to 25 TN744s in a system. To alarm the first occurrence of a CLSFY-PT being taken out of service, set this field to 8 times the number of TN744s. If this number is set to more than 7 less than the total number of CSLFY-PTs in the system, a port network with only one TN744 could lose all of its CLSFY-PTS before the alarm is raised. If there are no TN744s in the system, leave this field blank.

`Test Type 100, Test Type 102, Test Type 105`

This field specifies extensions assigned to receive tie-trunk calls from other switches that have test line origination capability. The system responds by sending a sequence of test tones. Test Type 100 tests far end to near end loss and C-message by sending:

- 5.5 seconds of 1004 Hz tone at 0dB
- Quiet until disconnect; disconnect is forced after one minute

Test Type 102 tests far end to near end loss by sending:

- 9 seconds of 1004 Hz tone at 0dB
- 1 second of quiet
- This cycle is repeated until disconnect; disconnect is forced after 24 hours.

Test Type 105 tests 2-way loss, gain slope, and C-message and C-notch noise by sending:

- nine seconds of 1004 Hz at -16dB
- one second of quiet
- nine seconds of 404 Hz at -16dB
- one second of quiet
- nine seconds of 2804 Hz at -16dB
- 30 seconds of quiet
- one half second of Test Progress Tone (2225 Hz)
- approximately five seconds of quiet
- forced disconnect

`ISDN-PRI Test Call Extension`

This field indicates the extension used by far-end ISDN nodes to place calls to the system, for testing ISDN-PRI trunks between the far-end and the system.

`ISDN-BRI Service SPID`

This field shows if the link associates with the Service SPID. If the link is associated with the Service SPID. This number is the test spid (0 – 99999) (see "BRI-SET, ASAI-ADJ, BRI-DAT"). Otherwise, this field is blank. Service SPID is a feature used by the system technician to check building wiring between the switch and the BRI endpoint.

`DSO Loop-Around Test Call Extension`

The extension used to set up a DSO loop around connection for testing non-ISDN DS1 trunks

The DSO Loop-Around Test Call feature is used primarily for testing DSO channels associated with non ISDN-PRI trunks. The loop-around is activated by dialing the test extension number. Multiple DSO Loop-Around connections can be established by placing multiple calls to the loop-around extension.

For more information see "Facility Test Calls" in Chapter 1, "Maintenance for R6csi Compact Modular Cabinets".

`Loss Plan`

Leave this field blank if no extra loss is required. If extra loss is required, enter digits as shown below. Use this field if additional loss is required to maintain transmission quality for conference calls by entering the digits shown below.

No. Of Parties To Be Conferenced	Enter Digit
3	2
4	3
5	4
6	5
7	6

`SPE Optional Boards:`

These fields indicate if a Disk circuit pack is present, and identifies administered Packet Interface slots. If a Packet Interface circuit pack is present, the corresponding Packet Interface field is set to y when the system boots. No change to that field is allowed. If a Packet Interface circuit pack is not present, the value for the Packet Interface field is read from translation data, and stored on disk or tape. If the field is set to **n**, a Packet Interface circuit pack may be administered by changing the corresponding `Packet Interface` field to **y**.

Modem Connection

On page 3 of the example forms, 11 fields disappear when the `Modem Connection`? field is set to **none**.

The first 2 fields on page 3 establish the data format for transmitting serial data from the switch to the modem. The two valid combinations for these fields are:

- Data Bits = 8, Parity = None
- Data Bits = 7, Parity =(odd, even, mark, or space)

`Modem Connection` Valid entries are ***none*** or ***external*** (external).

`Modem Name` This 20-character field accepts alpha-numeric characters to provide unique qualifiers for specified modems. ( )

`RTS/CTS Enabled` This field informs modems that communication with data source UARTs drive with RTS/CTS flow control. This 6-character field defaults to `&h1`. This field is case in-sensitive.

`Asynchronous Data Mode` This field configures the modem as an asynchronous communications device. This 8-character field defaults to `&Mo`. This field is case insensitive.

`DTE Auto-Data Speed`	This option adjusts the speed of data sources (DTE) UART to outgoing (modem-to-modem) data rates. The maximum speed is 9600 baud. This 6-character field defaults to blank ( ) and is case insensitive.
`Disable Data Compression`	This field deactivates default data compression algorithms in use by most consumer modems. This 6-character field defaults to blank (). Similar commands support the AT commands that control this capability; however, these commands do not operate the same.
`Enable Error Control`	This field activates V.42 LAPM and MNP error control protocols, if available. This 6-character field defaults to blank ( ). This V.42/MNP/Buffer mode attempts to negotiate V.42 error controls with the remote modem, then transitions to MNP. If this fails, no error control is used. This field is case in-sensitive.
`Misc. Init. Param`	This 20-character field defaults to blank ( ). This field supports unspecified initialization parameters. The AT commands specified in this free-form field to be sent to the external modem, always initialize last. This field is case in-sensitive.
`Auto-Answer Ring Count`	This field controls the number of rings required before modems automatically answer incoming calls. This 6-character field defaults to (S0=10). Typically, the maximum permissible value is 255. 1-255 denote the number of incoming ring cycles. This field is case in-sensitive.
`Dial Type`	This field controls inter-register signaling used between modems and Central Offices. This 3-character field defaults to (T) for tone dialing. P indicates Pulse dialing, This field concatenates with the dial string. This field is case in-sensitive.
`Adjustable Make/Break Ratio`	This field can be of particular importance when using a modem that may be transferable from country to country. This field controls make/break ratios of pulses and DTMF dialing. Intel product information supports make/break options for pulse dialing. Intel uses “&P0” to select 39% make ratios 61% break ratios for communication within the U.S. and Canada. “&P1” sets a 33% make ratio and 67% break ratio for the U.K. and Hong Kong. This 5-character field defaults to blank ( ) and is case insensitive.
`Dial Command`	This 3-character field defaults to (D). It denotes the modem’s dialing command. This field is case insensitive.

`No Answer Time-Out`

Most off-the-shelf external modems provide timers that abandon outbound data calls after predetermined intervals. Some modems permit this timer to be disabled, allowing outbound calls to ring indefinitely. Paradyne does not provide this capability, because having outbound call attempts ring indefinitely is generally undesirable.

The internal modem must disable this parameter set it to at least 255 seconds. This parameter is not administrable. For external modem connections, this parameter transmits first to the external modem.

Type approval applications can override this hardcoded constant, specifically in the U.K and other Western European nations, with the `Misc. Init. Param:` field. (S7=255)

clear audits

The **clear audits** command clears cumulative and/or peak hour's data collected for each data relation audit. This command clears old data to display data collected since the last **clear audits** command when the **status audits** command is invoked. Refer to the **status audits** manual page for more information).

Action/Object	Qualifier	Qualifier Description	Permissions	Defaults	Feature Interactions
clear audits	***cumulative***	Clears data collected about the peak hour since the last reboot or **clear audits cumulative** command	init inads	none	See below
	peak-hour	Clears peak hour data			
		Examples: **clear audits cumulative** **clear audits peak-hour**			

Feature Interactions

Status audits displays data cleared by the **clear audits** command. After **clear audits** executes successfully, the **display audits cumulative** and/or **display audits peak-hour** commands display information collected since the last **clear audits** command. The start date displays on the status audits screen reflecting the time that **clear audits** executed.

clear errors

The **clear errors** command moves errors and resolved alarms to cleared-error lists, making room for new incoming error messages. This command does not clear active alarms from the alarm log. This command must be used with care to prevent overwriting cleared entries. When additional entries are needed to log new errors, the system clears error entries first. Use the **display errors** command to list the cleared errors.

Action/Object	Qualifier	Qualifier Description	Permissions	Defaults	Feature Interactions
clear errors		Examples: **clear errors**	init inads craft	none	none

clear interface

The **clear interface** command reintializes counter values maintained by the Processor Interface (PI) circuit pack. The **status interface** command, used in the development environment, displays the counters. The PI circuit pack, a front end processor, implements the packet and link layers of the BX.25 protocol, and the ISDN procedure-D protocol.

Action/Object	Qualifier	Qualifier Description	Permissions	Defaults	Feature Interactions
clear interface	***location***	Processor interface address (cabinet-carrier-position): 1 = first processor 2 = second processor Examples: **clear interface 01a1** **clear interface 01a2** **clear interface a2**	init inads craft	none	none

clear isdn-testcall

The **clear isdn-testcall** command cancels in-progress ISDN-PRI test calls. Once a running test call is cleared, another can begin.

Action/Object	Qualifier	Qualifier Description	Permissions	Defaults	Feature Interactions
clear isdn-testcall	***group number*** ***member number***	Trunk group number. Member within the trunk group. Examples: **clear isdn-testcall 80/1** **clear isdn-testcall 78/2**	init inads craft	none	none

clear link

The **clear link** command clears the hardware error counters associated with ports on the Processor Interface circuit pack (displayed with the **status link** command).

Action/Object	Qualifier	Qualifier Description	Permissions	Defaults	Feature Interactions
clear link	***link-id***	Link number (1-8) assigned through **communication-interface links** form. Examples: **clear link 1** **clear link 8**	init inads craft	none	none

clear mst

The **clear mst** command precedes a trace. If this command is active during a trace, it clears unwanted data.

Action/Object	Qualifier	Qualifier Description	Permissions	Defaults	Feature Interactions
clear mst		Examples: **clear mst**	init inads	none	none

clear pkt

The **clear pkt** command resolves packet bus problems and sends a forced packet bus **clear stimuli** command over the packet bus.

Action/Object	Qualifier	Qualifier Description	Permissions	Defaults	Feature Interactions
clear pkt	***port network location***	Physical position of the packet bus (1 - 3) Examples: **clear pkt port-network 1**	init inads craft	none	none

clear port

The **clear port** works with the **mark port** command. This command removes marks from ports frees them for service.

Action/Object	Qualifier	Qualifier Description	Permissions	Defaults	Feature Interactions
clear port	***location***	Port location (**PCSSpp**) Examples: **clear port 01c1102**	init inads cust nms	none	none

disable administered-connection

The **disable administered connection** command stops both scheduled and periodic testing and stops processing of in-line errors for all or selected administered connections.

Action/Object	Qualifier	Qualifier Description	Permissions	Defaults	Feature Interactions
disable administered-connection	***ac number*** ***all***	Number of the administered connection Selects all administered connections Examples: **disable administered-connection all** **disable administered-connection 1** **disable administered-connection 128**	init inads craft cust rcust mis	none	none

disable mst

The **disable mst** command stops the message trace facility. If the trace was not already disabled, the command inserts a GAP marker into the trace. The user should execute the **disable mst** command when the trace is complete. If left enabled, the trace continues to use CPU time until the time limit expires. Entering **disable mst** command has no effect on the system if the trace is already disabled. To view the results of the trace, enter the **list mst** command.

Action/Object	Qualifier	Qualifier Description	Permissions	Defaults	Feature Interactions
disable mst		Example: **disable mat**	init inads	none	none

disable suspend-alm-orig

The **disable suspend-alm-orig** command stops entries from the active Suspend Alarm Origination table. This command disables all board entries that match a specific physical board location.

NOTE:
This command does *not* disable port entries.

Action/Object	Qualifier	Qualifier Description	Permissions	Defaults	Feature Interactions
disable suspend-alm-orig	***board location***	Physical location of the replaced or corrected board (does not support port location) Examples: **disable suspend-alm-orig 1C03** **disable suspend-alm-orig 1E07**	init inads craft cust rcust	none	none

disable synchronization-switch

This command stops the automatic clock switching capability of the maintenance subsystem. The clock refers to the oscillator on a tone/ clock or DS1 interface. The synchronization subsystem (TDM bus clock, DS1 trunk board, and maintenance and administration software) provides error-free digital communication between the switch and other PBXs, COs, or customer equipment.

Action/Object	Qualifier	Qualifier Description	Permissions	Defaults	Feature Interactions
disable synchronization-switch			init inads craft	none	none

disable test-number

The **disable test-number** command prohibits selected maintenance tests from running. To run a disabled test number, enter the **enable test-number** command.

Action/Object	Qualifier	Qualifier Description	Permissions	Defaults	Feature Interactions
disable test-number	***number*** **print** **schedule**	Maintenance test number Report sent to printer Command is validated and then a scheduling form displays to schedule execution of the command. The command is then placed in the command queue and is executed at the specified time. The information displayed by the command is sent to the system printer instead of the screen.[1] Examples: **disable test-number 710** **disable test-number 710 print** **disable test-number 510 schedule**	init inads	none	none

1. Refer to the Report Scheduler and System Printer feature specification for more details.

display alarms

The **display alarms** command creates an Alarm Report. The user completes an option screen to select the parameters for the report.

The system creates the reports from the logs of the maintenance subsystem. The subsystem monitors the system hardware and logs problems as errors or alarms. The type of alarm indicates the impact of the problem, as defined below:

Warning alarm—A minor interference which does not noticeably impair service.

Minor alarm—A problem which could disable a local area of the system and noticeably impair service.

Major alarm—A problem which widely degrades the system and seriously impairs service. The system automatically calls INADS to report major alarms.

Resolved alarm—A problem which has been corrected, and the system is correctly functioning. The system stamps resolved alarms with the date and time the problem was corrected. The system handles any errors associated with the alarms as “resolved.”

System Reboots and the Alarm Logs

The system saves the Alarm and Error logs to the memory card if any of the following events occur:

— The **save translation** command is executed.

— Translations are saved as part of scheduled maintenance.

— A reboot takes place.

— The PPN is about to lose all power after having been on battery backup.

The attempt to save the alarm and error logs may be unsuccessful if the MSS is not available.

Whenever the system reboots, the logs are restored from the SPE disk that becomes active with the reboot. Since the logs are saved to the disk on the SPE that was active *before* the reboot, the versions restored at reboot time may not be current. This condition occurs if:

— The attempt to save at reboot did not succeed.

— The SPE disk that is rebooted is not the same disk to which the logs were last saved.

In such a case, the logs will not contain the most recent errors and alarms. To determine if the restored logs are complete, look for indications that would have preceded the reboot.

System resets, that are less severe than a reboot, rarely affect the error and alarm logs.

NOTE:
If the error and alarm logs contain SYSTEM errors, then use the **display initcauses** command to search for information that system could *not* log during reset operation.

Action/Object	Qualifier	Qualifier Description	Permissions	Defaults	Feature Interactions
display alarms	***print***	Report sent to printer	init inads craft cust rcust bcms browse	all alarms displayed	See below
	schedule	Command is validated and then a scheduling form displays to schedule execution of the command. The command is then placed in the command queue and is executed at the specified time. The information displayed by the command is sent to the system printer instead of the screen.[1] Examples: **display alarms** **display alarms print** **display alarms schedule**			

1. Refer to the Report Scheduler and System Printer feature specification for more details.

Feature Interactions

- If the user disables the alarm origination with the **change system-parameters maintenance** command, then the Ack? (Acknowledged) field on the Alarm Report is blank regardless of the true acknowledged state of the alarm.

Options screen

When you enter the **display alarms** command, the system first displays the options screen. Select the options you want to view on the report. The figure below is an example of the options screen for Alarm Reports.

```
display alarms                                                    Page 1 of 1
                                   ALARM REPORTS

         The following options control which alarms will be displayed.
         ALARM TYPES
                    Active? y_      Resolved? n_
                     Major? y_         Minor? y_      Warning? y_
         REPORT PERIOD
                  Interval: m_    From: __/__/__:__  To: __/__/__:__
         EQUIPMENT TYPE ( Choose only one, if any, of the following )
                                Cabinet: ____
                           Port Network: __
                           Board Number: _______
                                   Port: ________
                               Category: ________
                              Extension: _____
                   Trunk ( group/member ): ___/___
```

Field descriptions

`ALARM TYPES`	Enter **y** (yes) or **n** (no) in any of the 5 alarm type fields
`Interval`	Enter **one** of the codes below: **m** = last month **h** = last hour **d** = last day ***w*** = last week **a** = all (default)
`From`	Month/day/year (example: 01/01/97); if the `From` date is blank, the report contains all the active alarms for the month *prior* to the current date.
`To`	Month/day/year (example: 01/15/97); if the `To` date is not entered, the report contains all the active alarms starting with the `From` date to the current date.
`Cabinet`	Administered cabinet number (1-3)
`Port Network`	1-3
`Board Number:`	Board address (**PCSS**); example: 01A20
`Port`	Port address (**PCSSpp**); example: 01A2031

`Category` Object code for the equipment category. Press HELP in this field to view a list of the object codes.

`Extension` Extension number (per dial-plan)

`Trunk` Enter a group number or a group and member number:

- Enter *only* the **group** number (01-99) to display *all* members in the group. Example: 01/__
- Enter *both* the **group** number (01-99) and **member** number (01-99) to display a *specific* member in a group.Example: 01/99

Output

After you complete the options screen, the system displays a 1- or 2-page Alarm Report. To toggle between the pages and to exit the report, use the keys described below:

- For 513 and 715 terminals, use **F8** for NEXT PAGE and PREV PAGE commands
- For all other terminals, use **F7** for NEXT PAGE and PREV PAGE commands
- Use **Esc** for the `CANCEL` command

The screen below shows an example of an Alarm Report.

```
display alarms

                                ALARM REPORT

Port    Maintenance  On      Alt    Alarm   Svc   Ack?  Date        Date
        Name         Brd?    Name   Type    State 1 2   Alarmed     Resolved

01C07   ANL-BD       y              MINOR         n n  05/22/20:26 00/00/00:00
01C0702 ANL-LINE     n       311    WARNING  IN        05/22/20:26 00/00/00:00
01C0701 ANL-LINE     n       1051   WARNING  IN        05/22/20:26 00/00/00:00
01C0703 ANL-LINE     n       1053   WARNING  IN        05/22/20:26 00/00/00:00
01C1505 CO-TRK       n       78/01  WARNING  OUT       05/22/20:26 00/00/00:00
01C1505 CO-TRK       n       78/01  WARNING  OUT       05/22/20:26 00/00/00:00
PN 02B  TDM-BUS      n              WARNING            05/23/14:53 00/00/00:00



Command successfully completed
```

Field descriptions

`Port`

Lists the location codes for the alarmed object, as follows:

- Circuit packs locations display as: cabinet-carrier-[slot]-[circuit]. Example: **01C0702**.
- Port network locations display as: port network number-bus. Example: **PN 02B**. PN 02 = Port Network (PN) number and A or B = bus.
- Fiber link locations display as: fiber link number-PNC side. Example: **x A-PNC**. “X” = fiber link number and “A” = PNC side [A or B].

`Maintenance Name`

Lists the logical name of the maintenance object with the alarm.

`On Brd`

A **y** (yes) indicates the fault was found on the associated circuit pack. A **n** (no) indicates the fault is **not** connected to the circuit pack.

`Alt Name`

Identifies the location of maintenance object, as follows:

- Station = extension number
- Trunk = Group number (78/__) or group and member numbers (78/01)
- Private CO Line = private CO line (P) and group number. (P/xxx)

`Alarm Type`

Alarm level: MAJOR, MINOR, or WARNING

`Service State`

Service state of the station and trunk ports:

- RDY = ready for service
- OUT = out of service
- IN = in service
- [Blank] = No associated service state

`Ack?` Headings 1 and 2 identify the first and second OSS telephone numbers, respectively. The entries below indicate the acknowledged alarm state:

- **y** (yes) = alarm has been acknowledged
- **n** (no) = alarm has **not** been acknowledged
- **c** (cleared) = alarm was first acknowledged, then resolved and cleared

[Blank] = no attempt was made to report the alarm

NOTE:
If the user disables the alarm origination with the **change system-parameters maintenance** command, then the **Ack?** field will be blank regardless of the true acknowledged state of the alarm.

`Date Alarmed` Month, day, hour, and minute of the alarm.

`Date Resolved` Month, day, hour, and minute of the resolution (active alarms = zeros)

display communication-interface

This command displays the translation data for hop channels. A hop channel is a bi-directional network channel between two interface links for DCS message hopping. A hop channel is used to tandem DCS messages from one interface link to another interface link. See "status link" for more details.

Action/Object	Qualifier	Qualifier Description	Permissions	Defaults	Feature Interactions
display communication-interface	***hop-channels***	Number of the local processor channel	init inads craft cust rcust	none	none
	print|	Report sent to printer			
	schedule	Command is validated and then a scheduling form displays to schedule execution of the command. The command is then placed in the command queue and is executed at the specified time. The information displayed by the command is sent to the system printer instead of the screen.[1]			

1. Refer to the Report Scheduler and System Printer feature specification for more details.

Output for Hop-channels qualifier

When you enter the command **display comm hop**, the systems displays the Hop Channel Assignment screen, similar to the screen below. The number of the local processor channel, used to hop the interface link channels, is not shown.

```
display communication-interface hop-channels         Page   1 of   4

                            HOP CHANNEL ASSIGNMENT

    Link/Chan Priority   Link/Chan Priority     Link/Chan   Link/Chan  Priority

     3     1               4   12
```

Field descriptions

`Link/Channel A` First of the two link/channels joined by the hop channel. Links range from 1 to 16. Channels range from 1 to 64. The link/channel must not be assigned to a local processor channel or to a PRI local processor channel.

`Link/Channel B` Second of the two link/channels joined by the hop channel. Links range from 1 to 16. Channels range from 1 to 64. The link/channel pair must not be assigned to a local processor channel or to a PRI local processor channel.

display disabled-tests

This command lists the numbers for all maintenance tests that have been disabled by INADS. These tests will not be available for background or demand testing.

Action/Object	Qualifier	Qualifier Description	Permissions	Defaults	Feature Interactions
display disabled-tests	**[print | schedule]**	Report sent to printer Command is validated and then a scheduling form displays to schedule execution of the command. The command is then placed in the command queue and is executed at the specified time. The information displayed by the command is sent to the system printer instead of the screen.[1]	init inads craft cust rcust	none	none

1. Refer to the Report Scheduler and System Printer feature specification for more details.

Output

The following examples shows the output from the **display disabled-tests** command.

```
display disabled-tests                                    SPE A

                          DISABLED TEST INFORMATION

         Test Number

         710

Command successfully completed
```

display errors

The **display errors** command creates an Alarm Report. The user completes an option screen to select the parameters for the report.

The system creates the reports from the logs of the maintenance subsystem. The subsystem monitors the system hardware and logs problems as errors or alarms.

Errors can result from in-line firmware errors, periodic tests, failures detected while executing a test command, software inconsistency, or a data audit discrepancy.

System Reboots and the Error Logs

The system saves the alarm and error logs to the memory card if any of the following events occur:

— The **save translation** command is executed.

— Translations are saved as part of scheduled maintenance.

— A reboot takes place.

— The PPN is about to lose all power after having been on battery backup.

The attempt to save the alarm and error logs may be unsuccessful if the MSS is not available.

Whenever the system reboots, the logs are restored from the SPE disk that becomes active with the reboot. Since the logs are saved to the disk on the SPE that was active *before* the reboot, the versions restored at reboot time may not be current. This condition occurs if:

— The attempt to save at reboot did not succeed.

— The SPE disk that is rebooted is not the same disk to which the logs were last saved.

In such a case, the logs do not contain the most recent errors and alarms. To determine if the restored logs are complete, look for indications that would have preceded the reboot.

System resets, less severe than a reboot, rarely affect the error and alarm logs.

NOTE:
If the error and alarm logs contain SYSTEM errors, then use the **display initcauses** command to search for information that system could *not* log during reset operation.

Action/ Object	Qualifier	Qualifier Description	Permissions	Defaults	Feature Interactions
display errors	***high resolution***	Highlights the time stamps on the Error Report for the first and last occurrences of the error.	init inads craft cust nms browse	all errors displayed	none
	print	Report sent to printer			
	schedule	Command is validated and then a scheduling form displays to schedule execution of the command. The command is then placed in the command queue and is executed at the specified time. The information displayed by the command is sent to the system printer instead of the screen.[1] Examples: **display errors** **display errors print** **display errors schedule** **display errors high-resolution print**			

1. Refer to the Report Scheduler and System Printer feature specification for more details.

Input form

When you enter the **display errors** command, the system first displays the options screen. You select the options you want to view on the report. The figure below is an example of the options screen for an Error Report.

```
display errors                                                  Page   1 of   1
                                ERROR REPORT
     The following options control which errors will be displayed.
         ERROR TYPES
            Error Type: _____          Error List: active-alarms
         REPORT PERIOD
            Interval: _       From: __/__/__:__ To: __/__/__:__
         EQUIPMENT TYPE ( Choose only one, if any, of the following )
                              Cabinet: __
                         Port Network: __
                         Board Number: ____
                                 Port: ______
                             Category: ________
                            Extension: _____
                 Trunk ( group/member ): ___/___
```

Field descriptions

`Error Type` Enter a specific error type. If the field is blank, the system displays all errors. Press HELP in this field to view a list of codes.

`Error List` Enter **one** of the error lists below:

- active-alarms (default)
- errors
- cleared-errors

The title for the Hardware Error Report will include the name of the selected error list.

`Interval` Enter **one** of the codes below:

- **m** = last month
- **h** = last hour
- **d** = last day (default)
- **w** = last week
- **a** = all

`From` Enter 2-digit numbers for the month/day/year (Example: 01/01/97). The default is the earliest time of the existing error records in the log.

`To` Enter 2-digit numbers for the month/day/year (Example: 01/01/97). The default is the current date.

`Cabinet` Enter 1

`Port Network` Enter 1

`Board Number:` Board address: **PCSS**

`Port` Port location: **PCSSpp**

`Category` Enter the object code for the equipment category. Press HELP in this field to view a list of the object codes

`Extension` Enter the extension number

`Trunk` Enter a group number or a group and member number:

- Enter *only* the **group** number (01-99) to display *all* members in the group. Example: 01/__
- Enter *both* the **group** number (01-99) and **member** number (01-99) to display a *specific* member in a group. Example: 01/99.

Form output

After completing the options screen, the system displays a 1- or 2-page Hardware Error Report. To toggle between the pages and to exit the report, use the keys described below:

- For 513 and 715 terminals, use **F8** for NEXT PAGE and PREV PAGE commands
- For all other terminals, use **F7** for NEXT PAGE and PREV PAGE commands
- Use **Esc** for the CANCEL command

The screen below is an example of an Hardware Error Report -- Active Alarms, **without** the high-resolution qualifier in the command line.

```
display errors                                                  Page  1   SPE A

                      HARDWARE ERROR REPORT - ACTIVE ALARMS

Port      Mtce     Alt     Err   Aux     First       Last      Err Err Rt/ Al Ac
          Name     Name    Type  Data    Occur       Occur     Cnt Rt  Hr  St
01C0702   ANL-LINE 311     257         01/31/09:20 01/31/20:26 255 256 255 a  y
01C0701   ANL-LINE 1051    257         01/31/20:26 01/31/20:26 4   0   4   a  y
01C0703   ANL-LINE 1053    257         01/31/20:26 01/31/20:26 4   0   4   a  y
01A       TDM-CLK          0     0     01/31/20:34 01/31/20:34 1   0   1   a  n
01C1505   CO-TRK   078/001 3329  57408 01/31/20:26 01/31/20:27 5   300 5   a  y
01C1505   CO-TRK   078/001 1537        01/31/20:26 01/31/20:28 5   150 5   a  y


Command successfully completed
```

Field descriptions

`Port` Lists the location codes for the alarmed object, as follows:

- Circuit packs locations display as: cabinet-carrier-[slot]-[circuit]. Example: 01C702.
- Port network locations display as: port network number-bus. Example: **PN 01B**. PN 01 = Port Network (PN) number and A or B = bus.

`Maintenance Name`	Lists the logical name of the maintenance object with an error logged against it.
`Alt Name`	Identifies the location of maintenance object, as follows: ■ Station = extension number ■ Trunk = Group number (78/__) or group and member numbers (78/01) ■ Private CO Line = private CO line (P) and group number (P/xxx)
`Error Type`	Lists the error number for the type of problem encountered for this maintenance object. The technician must use this error number in conjunction with the logical name information to determine the exact nature of the error.
`Aux Data`	Lists additional information concerning the maintenance object error condition. Like the error type, this data will be specific to the maintenance object type. However, unlike the error code, only the most recent value of the auxiliary data will be retained for each error record.
`First Occur`	Displays the month, day, hour, and minute (and second if the high-resolution command line option is used) that the error was first recorded.
`Seq Cnt`	Sequence Count - This number indicates the order of errors logged within a second for the time stamps associated with the first occurrence and last occurrence of an error. This information is displayed only if the **high-resolution** command line option is entered. There may be gaps for the sequence numbers within a given second since the last occurrence of an error may replace an existing entry that had been assigned the missing sequence number. Gaps may also appear in the numbers since sequence counts are also used with software event information not shown in the hardware error log.
`Last Occur`	Displays the month, day, hour, and minute (and second if the high-resolution command line option is used) of the most recent error. Note: if the system is unable to retrieve the time of day when the error occurred, a ‘dummy’ date will be stamped in the log and appears as: **00/00/01:07**.
`Err Cnt`	Error Count - The total number of times that the error type has occurred for this maintenance object. If the number of errors exceeds 3 digits, the system enters the number **256**, which indicates that a larger number of errors occurred, but could not be displayed correctly.

`Err Rt` Error Rate - The average rate at which the errors have occurred from the first occurrence to the present. If the number of errors exceeds 3 digits, the system enters the number **256**, which indicates that a larger number of errors occurred, but could not be displayed correctly.

`Rt/Hr` Rate per Hour - An approximation of the rate that this error occurred in the last hour.If the number of errors exceeds 3 digits, the system enters the number **256**, which indicates that a larger number of errors occurred, but could not be displayed correctly.

`Al St` Alarm Status - A character indicating the status of this MO in the error and alarm logs. The allowed values are:

a = Active alarm entry

r = Resolved alarm entry

c = Resolved alarm entry as a result of the long “clear” option of the test command

s = Resolved alarm entry as a result of a software requested (non-demand) system restart

t = Resolved alarm entry as a result of a technician requested system restart

n = Not alarmed.

Ac Active? - A **y** (yes) entry indicates the maintenance object is still active. A **n** (no) entry indicates the object is no longer a problem.

The screen below is an example of an Hardware Error Report -- Active Alarms, **with** the high-resolution qualifier in the command line.

When you enter the command **display errors high-resolution**, the system adds the `Seq Cnt` (sequence count) column. The number in the column indicates the order of errors logged within a second for the time stamps associated with the first occurrence and the last occurrence of an error. Refer to the field description above for more details.

```
display errors high-resolution                                  Page  1   SPE A

              HIGH RESOLUTION HARDWARE ERROR REPORT - ACTIVE ALARMS

Port     Mtce     Alt     Err   Aux         First   Seq       Last    Seq Err Al
         Name     Name    Type  Data        Occur   Cnt       Occur   Cnt Cnt St
01C0702  ANL-LINE 311     257         01/31/09:20:21 1  01/31/20:26:05 1  255 a
01C0701  ANL-LINE 1051    257         01/31/20:26:18 1  01/31/20:26:18 7  4   a
01C0703  ANL-LINE 1053    257         01/31/20:26:18 2  01/31/20:26:18 8  4   a
01A      TDM-CLK          0     0     01/31/20:34:35 1  01/31/20:34:35 1  1   a
01C1505  CO-TRK   078/001 3329  57408 01/31/20:26:07 1  01/31/20:27:28 1  5   a
01C1505  CO-TRK   078/001 1537        01/31/20:26:52 1  01/31/20:28:41 1  5   a


Command successfully completed
```

display events

A vector event is the occurrence of something unexpected during a vector-routed call due to resource exhaustion or faulty vector programming. For example, route-step failures are typically due to the programming of an invalid extension. These types of failures are not due to faulty hardware or system software error and do not constitute incorrect feature operation. This command allows you to diagnose and correct vectoring problems due to the above-mentioned causes. See *DEFINITY Communications System Generic 3 Call Vectoring and Expert Agent Selection (EAS) Guide*, 555-230-520, for information on how to interpret this report.

Action/Object	Qualifier	Qualifier Description	Permissions	Defaults	Feature Interactions
display events			init inads craft cust rcust	none	none

Input form

The following entry form is displayed to allow limiting the report to events of a certain type or from a defined time period.

```
display events                                Page  1 of  1   SPE B

                           EVENT REPORT

  The following options control which events will be displayed.

         EVENT CATEGORY

            Category: vector

         REPORT PERIOD

            Interval: _a_    From: __/__/__:__ To: __/__/__:__


         SEARCH OPTIONS

                             Vector Number: ___
                                Event Type: _____
```

Field descriptions

`Category`	`Vector` specifies the type of event report to display and is the only valid entry.
`Report Period`	The fields in this section allow you to view only those vector events that occurred within a specific time period. If these are left blank, all vector events recorded are displayed.
`Interval:`	This field specifies a display of all events within the last time period of the type Enter the first letter of one of the following selections: *a*ll, *m*onth, *d*ay, *h*our, *m*inute.
`Start/Stop Time`	The starting and ending times of the interval to be reported in 24-hour notation.
`Vector Number`	The number of the vector (1-256) for which events will be reported. If this field is left blank, events for all vectors are reported.
`Event Type`	Specific types of vector events are associated with numbers from 50000 to 50999. Entering one of these numbers limits the report to events of this type. If this field is left blank, events for all types of vectors are reported.

Output

See *DEFINITY Communications System Generic 3 Call Vectoring and Expert Agent Selection (EAS) Guide*, 555-230-520, for more information on how to interpret this report. In particular, the `Event Data 2` field is associated with possible causes and repair strategies for the event.

The following example shows a typical vector event report.

```
display events                                    Page  1   SPE B


                        EVENTS REPORT

Event Event                  Event    Event   First     Last     Evnt
Type  Description            Data 1   Data 2  Occur     Occur     Cnt


50020 Call not queued        256/5     B   09/28/13:43 09/28/13:43  1
50541 Not a messaging split  Split 89  4C  09/28/13:43 09/28/13:43  1
```

Field descriptions

`Event Type`	A number from 50000 to 50999 that identifies what type of vector event occurred.
`Event Description`	A text string describing the event.
`Event Data 1`	If in the format *number*/*number* such as “200/10”, this indicates the vector number and step number associated with the event. If in the format “Split *number”* such as “Split 2”, this indicates the split number.
`Event Data 2`	Additional data concerning the event encoded as a hex number.
`First Occur`	The date and time when the vector event first occurred.
`Last Occur`	The date and time when the vector event last occurred.
`Evnt Cnt`	The total number of times, up to 255, that vector events of this type have occurred.

display initcauses

The **display initcauses** command displays a history of recovery steps taken by the system. Each time the system performs some type of recovery (due to user request or a hardware or software problem), the recovery information is stored. The software error log also contains information pertaining to restarts. If a reset 4 (reboot) occurs, the software error log is also be stored. Information in the software error log should be used in conjunction with information in the initcauses log.

The history of the last 16 restarts performed by the system will be recorded to the initcauses buffer in chronological order. This buffer fills an entire screen with information if it is completely full. Power failures in the processor complex wipe out the entire initcauses buffer.

Action/Object	Qualifier	Qualifier Description	Permissions	Defaults	Feature Interactions
display initcauses	***print***	Report sent to printer	init inads craft nms	none	none
	schedule	Command is validated and then a scheduling form displays to schedule execution of the command. The command is then placed in the command queue and is executed at the specified time. The information displayed by the command is sent to the system printer instead of the screen.[1] Examples: **display initcauses** **display initcauses print** **display initcauses schedule**			

1. Refer to the Report Scheduler and System Printer feature specification for more details.

Output

The following example shows the output from the **display initcauses** command.

```
display initcauses

                              INITIALIZATION CAUSES

     Cause                 Action   Escalated    Carrier      Time
 System Technician Request   4        no           1A       08/05  9:15
 Upgrade Software            2        no           1A       08/05  9:29
 Software Request            1        no           1A       08/09  2:34


 Command successfully completed
```

Field descriptions

`Cause`

- `Bad Memory`: A defective memory circuit pack generating too many errors caused a restart.
- `System Technician Request`: The restart was performed because of system technician demand. A system technician-requested **reset system 4** command entry should always precede an **upgrade software** command entry.
- `Failed Interchange`: A “hot-start” interchange (system technician-demanded, scheduled, or software-requested) failed because shadowing was disabled.
- `Initialized`: This is always the first entry in the history and is present until more than 15 restarts have been performed.
- `LMM Request`: A sanity time-out was requested by the LMM firmware. The three processor circuit pack LEDs blink until the sanity timer goes off. The LMM requests a restart like this when it gets into trouble, usually with memory.
- `Maintenance Reset`: This refers to resets of the SPE by maintenance in SPE Down mode in which maintenance periodically tries to awaken the SPE.
- `Oryx Request`: A sanity time-out was requested by the Oryx operating system. The three processor circuit pack LEDs blink until the sanity timer goes off. Oryx requests a restart like this when it gets into trouble, usually with software.
- `Sanity Timer Reset`: The sanity timer on the processor timed out and reset the system. This event usually indicates a software fault.
- `Software Request`: Software requested the system restart.
- `Unknown`: A restart that could not be classified. The Software Error Log may contain more information about the restart.
- `LMM Put Fail`: This initcause occurs when the LMM has failed to place the request for initcause message in the DPR. This could occur if the MTP does not respond to the DPR handshake. Level of Restart: Warm (escalation turned on).
- `LMM Get Fail`: This initcause occurs when the LMM does not receive a response to the request for initcause message from the MTP. This could occur if the MTP is not taking messages out of the DPR. Level of Restart: Warm (escalation turned on).
- `MTP Reset Unknown`: This initcause occurs when the LMM has reset the MTP during the process of trying to get initcause from the MTP. Level of Restart: Warm (escalation turned on).

`Action` The level of recovery performed by the system. The recovery levels follow:

Reset system 1 (Warm)
Reset system 2 (Cold-2)
Reset system 3 (Cold-1)
Reset system 4 (Reboot)
Reset system 5 (Extended Reboot)

`Escalated` Whether the restart was escalated to a higher level to clear the problem. There is a software escalation strategy that can cause a higher level restart than the one previously performed to be executed if the need arises.

`Carrier` Indicates the carrier on which the recovery was performed (**1A**).

`Time` The date (month and day) and time of the restart.

display memory-configuration

This command indicates the total memory available for the active processor.

Action/ Object	Qualifier	Qualifier Description	Permissions	Defaults	Feature Interactions
display memory-configuration	***long*** ***short***	Option required to display the SPE Flash ROM and DRAM configuration.[1]	init inads craft cust browse	none	none
	print	Report sent to printer			
	schedule	Command is validated and then a scheduling form displays to schedule execution of the command. The command is then placed in the command queue and is executed at the specified time. The information displayed by the command is sent to the system printer instead of the screen.[2] Examples: **display memory-configuration** **display memory-configuration long**			

1. The long and short options are the same.
2. Refer to the Report Scheduler and System Printer feature specification for more details.

Output

The following example shows the output from the **display memory** command.

```
display memory-configuration
                      PROCESSOR MEMORY-CONFIGURATION
                                 (M bytes)



                               SPE_A

               Flash ROM:        16

              Total DRAM:        16


Command successfully completed

Command:
```

display port

This command displays the port location, the equipment connected to the port, and the means by which the port can be identified (for example, an extension number, the trunk group and member, and so on).

Action/ Object	Qualifier	Qualifier Description	Permissions	Defaults	Feature Interactions
display port	***location***	Port address (**PCSSpp**)	init inads craft cust browse	none	none
	print	Report sent to printer			
	schedule	Command is validated and then a scheduling form displays to schedule execution of the command. The command is then placed in the command queue and is executed at the specified time. The information displayed by the command is sent to the system printer instead of the screen.[1] Examples: **display port 1c0801** **display port 1c0802 print** **display port 2c1504 schedule**			

1. Refer to the Report Scheduler and System Printer feature specification for more details.

Output

The following example shows the output for the **display port 1c0801** command.

```
display port 1c0801                                SPE A

                       PORT INFORMATION

                         Port: 01C0801
               Equipment Type: Station
               Identification: 1021
```

Field descriptions

`Port:` Port address (cabinet-carrier-slot-circuit)

`Equipment Type:` Hardware that is physically connected to the specified port.

`Identification:` Depends on the hardware that is physically connected to the port:

If hardware is	The field contains
station	station extension
trunk	trunk group and member number)
modem pool	modem pool group number

display synchronization

This command calls up the synchronization form where the administered synchronization stratum and reference sources are displayed. (No changes can be made to the system synchronization with this command.)

Action/Object	Qualifier	Qualifier Description	Permissions	Defaults	Feature Interactions
display synchron-ization	***print***	Report sent to printer	init inads craft cust rcust bcms browse	none	See below
	schedule	Command is validated and then a scheduling form displays to schedule execution of the command. The command is then placed in the command queue and is executed at the specified time. The information displayed by the command is sent to the system printer instead of the screen.[1] Examples: **display synchronization** **display synchronization print** **display synchronization schedule**			

1. Refer to the Report Scheduler and System Printer feature specification for more details.

Feature Interactions

- A DS1 interface or a UDS1 board that has been selected as either a primary or secondary synchronization source cannot be removed on the DS1 circuit pack administration form or the regular circuit pack administration form.

Output

The following example shows the output for the **display synchronization** command.

```
display synchronization                        Page  1 of  2

       SYNCHRONIZATION SOURCE (Synchronization Plan circuit pack location)

           Stratum: 4
           Primary:      Secondary:

                         DS1 CIRCUIT PACKS

 Location    Name     Slip        Location    Name     Slip
 01C10 D92D1 ds1 1c10   n
 01C11 D92D1 ds1 1c11   n

 NOTE: DS1 and BRI Trunk sources result in stratum 4, type II synchronization
```

Field descriptions

`Stratum:`	Synchronization stratum that is used (3 or 4)
`Primary:`	First choice system synchronization source (blank = no synchronization); valid only if stratum 4 synchronization specified
`Secondary:`	Second choice system synchronization source (blank = no synchronization); valid only if stratum 4 synchronization specified
`Location:`	Circuit pack location (cabinet-carrier-slot) of all administered DS1 circuit packs are listed here.
`Name:`	User-defined name administered for the DS1 circuit pack. Blank means no user-defined name administered.
`Slip:`	If the DS1 circuit pack has slip alarm, field shows y; otherwise, n.
`Port Network:`	Stratum 3 only; specifies the port network supplying synchronization through the tone clock circuit pack.

display system-parameters maintenance

This command displays the translation data for maintenance-related system parameters.

Action/Object	Qualifier	Qualifier Description	Permissions	Defaults	Feature Interactions
display system-parameters maintenance	***print***	Report sent to printer	init inads craft super-user Maintain Switch Circuit Packs permissions	none	none
	schedule	Command is validated and then a scheduling form displays to schedule execution of the command. The command is then placed in the command queue and is executed at the specified time. The information displayed by the command is sent to the system printer instead of the screen.[1] Examples: **display system-parameters maintenance** **display system-parameters maintenance print** **display system-parameters maintenance schedule**			

1. Refer to the Report Scheduler and System Printer feature specification for more details.

Output

The following display shows a typical result when **display system-parameters maintenance** is entered.

```
display system-parameters maintenance                          Page   1 of 3
                   MAINTENANCE-RELATED SYSTEM PARAMETERS

OPERATIONS SUPPORT PARAMETERS
            Product Identification: 1000000000
        First OSS Telephone Number: 5551212           Abbrev Alarm Report? y
       Second OSS Telephone Number: 5551213           Abbrev Alarm Report? n
  Alarm Origination to OSS Numbers: both
        Cleared Alarm Notification? y
              Restart Notification? y
           Test Remote Access Port? n
        CPE Alarm Activation Level: none
     Customer Access to INADS Port? n
       Repeat Dial Interval (mins): 7

SCHEDULED MAINTENANCE
                  Start Time: 22: 00                    Stop Time: 04: 00
           Daily Maintenance: daily              Save Translation: daily
 Control Channel Interchange: no        System Clocks Interchange: no
             SPE Interchange: no             EXP-LINK Interchange: no
```

```
   display system-parameters maintenance           Page 2 of 3

           MAINTENANCE-RELATED SYSTEM PARAMETERS

 MAINTENANCE THRESHOLDS ( Before Notification )
   Minimum Threshold for TTRs: 4    Minimum Threshold for CPTRs: 1
   Minimum Threshold for Call Classifier Ports: _

 TERMINATING TRUNK TRANSMISSION TEST (Extension)
   Test Type 100:        Test Type 102:         Test Type 105:

 ISDN MAINTENANCE
    ISDN-PRI TEST CALL Extension: _____   ISDN BRI Service SPID: _____

 DS1 MAINTENANCE
    DSO Loop-Around Test Call Extension: 1001

 LOSS PLAN (Leave Blank if no Extra Loss is Required)
    Minimum Number of Parties in a Conference Before Adding Extra Loss: _____

 SPE OPTIONAL BOARDS
  Disk? y   Packet Intf1? y   Packet Intf2? n     Packet Intf3? n
```

```
   change system-parameters maintenance           Page 3 of 3

           MAINTENANCE-RELATED SYSTEM PARAMETERS

        Modem Connection: external
               Data Bits: 8
                  Parity: none

              Modem Name: usr

         RTS/CTS Enabled: &H1        Auto Answer Ring Count (rings): S0=10
  Asynchronous Data Mode: &M0                             Dial Type: T
     DTE Auto-Data Speed:               Adjustable Make/Break Ratio: &P0
Disable Data Compression:                             Dial Command: D
    Enable Error Control:                        No Answer Time-out: S7=255
       Misc. Init. Param: ____________________




Help/Error Message Line
Command Line
```

Field descriptions

Defaults for data entry fields are listed in parentheses.

Product Identification	10-digit number (starting with 1) that identifies the switch to an Operations Support System (OSS), for example, INADS.
First OSS Telephone Number	First telephone number that the switch dials to report alarms; must be obtained from the National Customer Support Center (NCSC) or the TSC. (# and ***** are not allowed in the telephone number.)
Abbrev Alarm Report	Enables the Abbreviated Alarm Report feature for the first OSS. (yes)
Second OSS Telephone Number	Second telephone number that the switch dials to report alarms; must be obtained from the National Customer Support Center (NCSC) or the TSC. (# and ***** are not allowed in the telephone number.)
Abbrev Alarm Report	Enables the Abbreviated Alarm Report feature for the second OSS. (no)

`Alarm Origination to OSS Numbers`

One of four options for alarm origination (neither):

- If `both`, all Major and Minor alarms result in an automatic call to both OSS telephone numbers. Both OSS telephone numbers must be administered.
- If `first-only`, all Major and Minor alarms result in an automatic call to the first OSS number only. The switch does not call the second OSS telephone number even if the number is administered. The first OSS telephone number must be administered
- If `neither`, alarm origination does not take place. Warning alarms are not reported to either numbers.
- If `second-as-backup`, all Major and Minor alarms result in an automatic call to the first OSS telephone number. If calling the first OSS telephone number fails four attempts, the switch starts to call the second OSS telephone number as a backup until calling the first OSS telephone number becomes successful. Both OSS telephone numbers must be administered.

Before Release 5, the name of this field is `Alarm Origination Activated`. If Alarm Origination is deactivated, both Cleared Alarm Notification and Restart Notification are disabled, even though they may still be activated in the administration.

`Cleared Alarm Notification`

Enables the switch to originate a call to the OSS and send an alarm resolution message whenever all previously-reported Major and Minor alarms are resolved. Alarm Origination must be activated in order for Cleared Alarm Notification to work. (no)

`Restart Notification`

Enables the switch to originate a call to the OSS and report any system restarts caused by problems with the switch.

`Suspension Threshold`

The threshold for suspending Cleared Alarm Notification (1-15). Some problems may cause alarms to be generated and then resolved repeatedly. To detect these problems (by not sending additional Cleared Alarm notifications to indicate a problem-free system), the switch suspends Cleared Alarm Notification when it has reported this administrable number of Cleared Alarm notifications in a 24-hour period. A suspended Cleared Alarm Notification is only enabled again with a successfully completed “logoff” command, a system reset, or when the threshold is changed. This field is irrelevant if Cleared Alarm Notification or Alarm Origination is disabled.

`Test Remote Access Port`

Specifies whether testing of the remote access port on the SYSAM circuit pack is enabled. This field should read `yes` whenever there is an INADS line connected to the switch and there is a maintenance contract in effect so that alarm origination capability is maintained.

`CPE Alarm Activation Level`

Indicates the minimum level (Major, Minor or Warning) at which the Customer-Provided Equipment (CPE) alarm is activated. If the level is none, the CPE does is not activated for any alarm. (none)

NOTE:
The CPE alarm is always activated when the switch goes into Emergency Transfer, regardless of the CPE Alarm Activation Level setting.

`Customer Access to INADS Port`

Provides the capability to prohibit access to system administration and maintenance interface, via the INADS port when using customer login ID's. This field can only be activated by Lucent services through system-parameters maintenance administration.(no)

`Repeat Dial Interval (MMS)`

Indicates the number of minutes that the system must wait before attempting another call origination to an OSS. This timer is triggered by the lack of a far-end acknowledgment. (7)

Scheduled Maintenance

A series of maintenance tests and operations runs automatically every day according to the schedule and settings specified in the following fields.

`Start Time`

The hour and minute (24-hour notation) at which daily scheduled maintenance begins. (22:00)

`Stop Time`

Time (hour and minute) when scheduled daily maintenance stops. If any daily maintenance operations are not completed by this time, the system notes where in the sequence it stopped and perform those operations during the next scheduled daily maintenance.

`Daily Maintenance`

This display-only field simply represents the series of tests that are always run by maintenance software as part of daily maintenance.

`Save Translation`

This field indicates on which days translation data in memory will automatically be saved to the Mass Storage System disk and/or tape devices during scheduled maintenance. The save operation is first made to disk, followed by a disk backup to tape. On systems with duplicated SPEs, translation data is saved on both SPEs. Valid entries are **daily**, days of the week, or **no**. "No" specifies that no automatic saves are to be executed. (daily)

`Control Channel Interchange`

Each port network has a pair of TDM busses called A and B, each of which has a set of time slots dedicated to use by the control channel. At any one time, the control channel in each PN is carried on only one of the two busses. This field indicates on which days the control channel in each port network will be switched from one of the paired TDM busses to the other. Valid entries are **daily**, days of the week, or **no**. "No" specifies that no interchange be executed. (no)

`EXP-LINK Interchange`

This field indicates whether or not the expansion links between port-networks are interchanged as part of scheduled maintenance. The value “daily'' means that EXP-LINK interchange occurs automatically everyday. The value “no'' means that EXP-LINK interchange is not done automatically as part of scheduled maintenance. Values represented by the days of the week mean that EXP-LINK interchange occurs automatically on the specified day only. Since EXP-LINK interchange only applies to duplicated systems, simplex systems do not display this field. (no)

`Minimum Threshold for TTRs`

When the number of touch tone receivers (TTRs) in service falls below this number (4 to 200), a WARNING alarm is raised against TTR-LEV. These are also known as dual-tone multifrequency receivers (DTMRs). There are 4 TTRs on each TN748 Tone Detector circuit pack, and up to 50 TN748s in a system. To alarm the first occurrence of a TTR being taken out of service, set this field to 4 times the number of TN748s. If this number is set to more than three less than the total number of TTRs, a port network with only one TN748 could lose all of its TTRs before this alarm is raised.

`Minimum Threshold for CPTRs`

When the number of call progress tone receivers in service falls below this number (2 to 100), a WARNING alarm is raised against TTR-LEV. These are also known as general purpose tone detectors (GPTDs). There are 2 CPTRs on each TN748 Tone Detector circuit pack, and up to 50 TN748s in a system. To alarm the first occurrence of a CPTR being taken out of service, set this field to 2 times the number of TN748s. If this number is set to more than one less than the total number of TTRs, a port network with only one TN748 could lose all of its CPTRs before this alarm is raised.

`Minimum Threshold for Call Classifier Ports`

When the number of call classifier ports (CLSFY-PTs) in service falls below this number, a WARNING alarm is raised against TTR-LEV. Valid entries are 1 to 200. There are 8 ports on each TN744 Call Classifier circuit pack, and up to 25 TN744s in a system. To alarm the first occurrence of a CLSFY-PT being taken out of service, set this field to 8 times the number of TN744s. If this number is set to more than 7 less than the total number of CSLFY-PTs in the system, a port network with only one TN744 could lose all of its CLSFY-PTS before the alarm is raised. If there are no TN744s in the system, leave this field blank.

`Test Type 100, Test Type 102, Test Type 105`

An extension assigned to receive tie-trunk calls from other switches with test line origination capability. The system responds by sending a sequence of test tones. Test Type 100 tests far-end to near-end loss and C-message by sending:

- 5.5 seconds of 1004 Hz tone at 0dB
- Quiet until disconnect; disconnect is forced after one minute

`ISDN-PRI Test Call Extension`

The extension used by a far-end ISDN node to place a call to the system to test the ISDN-PRI trunks between the far-end and the system.

`ISDN-BRI Service SPID`

This field shows whether or not the link is associated with the Service SPID. If the link is associated with the Service SPID, this field contains a “yes” and the extension field is blank; otherwise, this field is blank. Service SPID is a feature used by the system technician to check building wiring between the switch and the BRI endpoint.

`DSO Loop-Around Test Call Extension`

Extension number for the test call. This test extension number is used to establish a loop-around connection on the selected trunk.

The DSO Loop-Around Test Call feature is used primarily for testing DSO channels associated with non-ISDN-PRI trunks. The loop-around is activated by dialing the test extension number. Multiple DSO Loop-Around connections can be set up by placing multiple calls to the loop-around extension.

The DS0 Loop Around feature provides a loop around connection for incoming non-ISDN DS1 trunk data calls. This feature is similar to the far-end loop around connection provided for the ISDN Test Call feature. This DS0 loop around is provided primarily to allow a network service provider to perform facility testing at the DS0 level before video teleconferencing terminals are installed at the PBX.

The feature is activated on a call-by-call basis by dialing a test call extension specified on the second page of the System Parameters Maintenance form. No special hardware is required. When the test call extension is received by the PBX, a non-inverting, 64 kbps connection is set up on the PBX's Time Division Multiplexed bus. More than one loop around call can be active at the same time.

For calls routed over the public network using the ACCUNET Switched Digital Service (SDS) or Software Defined Data Network (SDDN), the data transmission rate is 56 Kbps, since robbed bit signaling is used. For calls established over a private network using common channel signaling, the full 64 kbps data rate is available.

When the incoming trunk group is used only for data calls (SDS), the Communications Type on the associated Trunk Group form should be set to “data.” When the incoming trunk group is used for robbed bit alternate voice and/or data (SDN/SDDN), the Communications Type on the Trunk Group form should be set to **rbavd** (robbed bit alternate voice data). For private network trunks using common channel signaling, the Communications Type on the associated Trunk Group form can be set to “avd.”

`Loss Plan`

Use only when extra loss is required to maintain quality of transmission on conference calls. Leave this field blank if no extra loss is required. If extra loss is required, enter digits as shown below.

No. of Parties to Be Conferenced	Enter Digit
3	2
4	3
5	4
6	5
7	6

`SPE Optional Boards:` These fields indicate whether a Disk circuit pack is present in the system, and which Packet Interface slots are administered. If a Packet Interface circuit pack is physically present, the corresponding Packet Interface field is set to y when the system boots, and no change to that field is allowed. If the system is equipped with duplicated SPEs, a Packet Interface field is set to **y** when either SPE carrier contains a Packet Interface circuit pack in the corresponding position. If a Packet Interface circuit pack is not present, then the value for the Packet Interface field is read from translation data stored on disk or tape. If the field is set to **n**, a Packet Interface circuit pack may be administered by changing the corresponding Packet Interface field to **y**.

Modem Connection

On page 3 of the example forms shown below, there are 11 fields that are hidden when the `Modem Connection`? field is set to **none**. In this example the `Modem Connection` field is set to **external**, and these additional 11 fields are visible.

The first 2 fields on page 3 help setup the data format for the serial data from the switch to the modem.There are only two valid combinations for these 2 fields:

- Data Bits = 8, Parity = None
- Data Bits = 7, Parity = (odd, even, mark, or space)

The remaining fields are listed below:

`Modem Connection` None or external (none)

`Modem Name` 20-characters alpha-numeric field for a unique modem name

`RTS/CTS Enabled` Informs the modem that communication with the data source UART will be driven with RTS/CTS flow control (6 characters long, default = &H1). Field is case insensitive, however, the default is in upper case. (&H1)

`Asynchronous Data Mode` Configures the modem as an asynchronous communications device (8 characters long, default = &M0). Field is case insensitive, however, the default is in upper case.

`DTE Auto-Data Speed`	Speed of the data source (DTE) UART to the outgoing (modem-to-modem) data rate (maximum = 9600 baud); field is 6 characters long and case insensitive; default = blank
`Disable Data Compression`	Turns off the default data compression algorithms that are in use by most consumer modems; field is 6 characters long and case insensitive; default = blank.
`Enable Error Control`	Turns on the V.42 LAPM and MNP error control protocols, if available, on the modem; field is 6 characters long and case insensitive; default = blank. This V.42/MNP/Buffer mode first attempts to negotiate V.42 error control with the remote modem. If this fails, then the modem transitions to MNP, and if this fails then no error control is used.
`Misc. Init. Param`	Supports any initialization parameters not already specified; field is 20 characters long and case insensitive; default = blank. The AT commands specified in this free-form field are always the last initialization parameters to be sent to the external modem.
`Auto-Answer Ring Count`	Number of rings before the modem automatically answers an incoming call; field is 6 characters long and case insensitive; default is “S0=10” (in upper case). The values 1-255 denote the number of incoming ring cycles.
`Dial Type`	Type of inter-register signaling to be used between the modem and the Central Office; field is 3 characters long, case insensitive, and is concatenated with the dial string. T = tone dialing (default in upper case) P = pulse dialing
`Adjustable Make/Break Ratio`	Controls the make/break ratios of pulses and DTMF dialing and can be of particular importance when using a modem that may be transferable from country to country. Field is 5 characters long and case insensitive; default = blank.
`Dial Command`	Modem dial command; field is 3 characters long and case insensitive; default = “D” as the default.

`No Answer Time-Out`

Most off-the-shelf external modems provide a timer that abandons any outbound data call after a predetermined interval. Some modems provide for this timer to be disabled, thus allowing an outbound call to ring indefinitely. Paradyne does not provide this capability with their modem line, because it is generally undesirable to have an outbound call attempt ring indefinitely.

The internal modem must have this parameter disabled or set to at least 255 seconds.

This is a non-administrable parameter. For the external modem connection, this parameter is the first initialization string to be transmitted to the external modem. This field is visible on the administration form in display mode only.

This hardcoded constant can be overridden for type approval applications, specifically in the U.K and other Western European nations, by the use of the `Misc. Init. Param:` field. (S7=255)

display time

This command displays the system time but does not allow for any changes to the system time.

Action/Object	Qualifier	Qualifier Description	Permissions	Defaults	Feature Interactions
display time	***print***	Report sent to printer	init inads craft cust browse	none	Date and time are generally used by the switch.
	schedule	Command is validated and then a scheduling form displays to schedule execution of the command. The command is then placed in the command queue and is executed at the specified time. The information displayed by the command is sent to the system printer instead of the screen.[1] Examples: **display time** **display time print** **display time schedule**			

1. Refer to the Report Scheduler and System Printer feature specification for more details.

Output

The following example shows the output for the **display time** command.

```
display time

                      DATE AND TIME

    DATE
       Day of the Week:  Sunday       Month: January
       Day of the Month: 1            Year:  1990

    TIME
                    Hour: 6          Second: 20
                  Minute: 8

WARNING! Changing the date or time will impact BCMS, CDR and MEASUREMENTS.
```

Field descriptions

Day of the Week	The day of the week that the system has stored.
Day of the Month	The numerical day of the month.
Month	The month of the year stored by the system.
Year	The current year stored by the system.
Hour	The hour of the current day.
Minute	The number of minutes into the hour.
Second	The number of seconds into the minute stored by the system.

download update-file

The update file is transferred to the switch asynchronously from either an INADS host or a personal computer (PC) using the XMODEM protocol.

Remote download

Remote users can dial into the switch by either using the “call” command (from an INADS host) or by dialing the switch directly with a modem. Once the connection has been established, the user logs into the switch as a remote system access terminal (SAT) using the inads login.

NOTE:
Only the INADS and INIT logins have the necessary permission to send an update file to the switch.

1. Type the **download update-file** command and press ENTER. “`Please wait...`" displays on the screen.

   After completing some initialization, "`Please start file transmission now...`" displays.

2. Start an XMODEM session on the remote end and send the update file.
   a. INADS host: enter **~dload <*file_name*>** to start the file transmission.
   b. PC: follow the instructions in the emulator's manual for invoking an XMODEM session to send the update file.

Each block is written to tape or flash card as it is received by the switch. The link level of XMODEM provide error detection and retransmission. Additional protection is provided within the application level. After the entire file has been written to tape or flash card, it is read back and each update file block is validated, and the file checksum is also checked. If the file appears to be sound, the status word in the header block is changed to indicate that it is a valid update file.

There may be a delay between the end of the file transmission and command completion. This delay is caused by the patch application of any immediate sub-patches.

Action/Object	Qualifier	Qualifier Description	Permissions	Defaults	Feature Interactions
download update-file			init inads	none	See below

Feature Interactions

- The form displayed for the list configuration software-vintage command has been modified to reflect the changes imposed by the flash architecture. The **list configuration software** command allows INADS to determine with one query the hardware configuration, software vintage, and patch identifier.
- There is no interaction with routine periodic or scheduled maintenance, because patches are only applied on restarts before the system is in normal operation.
- The flash checksum test acts as a backup check to ensure that the entire field update file was applied correctly. It can fail because of a bad checksum update from a poorly constructed update file or because the patching operation has aborted. When the flash Checksum Test fails, a MAJOR on-board alarm is raised on the processor/memory circuit pack.
- When checking the software, the test compares the memory resident software version and patch identifier. It also checks for the presence of a field update file and, if found, compares the old and new patch identifiers to make sure the same patch file id loaded on each processor. If the software or update files are inconsistent, the **list configuration software** command can be used to display the status of the patch file.

Recovery procedures

In the event of a failure encountered during the download and application of the update file, follow the recommended recovery procedures.

Error on the download transmission

If the error displayed on the terminal indicates that the download step in the process failed, there are several culprits:

1. The transmission line could have been noisy. Retry after making all the following checks. Failed attempts take up room in the hard patch file and may require a warm start to clear the file.
2. The user may have downloaded the tape/MIPS version of the patch instead of the flash version.
3. The vintage of the update file may not match the vintage of software currently running in the system. Check the customer's vintage using **list configuration software** and patch vintage provided in the documentation.
4. The switch may have had difficulty in writing to the hard patch file. Check the hardware error log for processor/memory board failures.
5. The hard patch file may be full. Issue a **reset system 1**. This should cause valid files to be applied and invalid ones to be erased.

Error on Application of the Patch

A patch may not have been applied for the following reasons:

1. The memory card is write-protected. Remove this protection and issue a **reset system x** command
2. The patch identifiers are inconsistent. Run **list configuration software** and compare the old_patch identifier with the values in the update file.
3. The LMM encountered a problem with the patch file. This is unlikely because the same checks (and more) were performed when the file was downloaded, prior to marking the file valid. This implies that the memory that stored the update file was corrupted.
   a. Apply the back out file immediately to back out the changes.
   b. Run the flash checksum test to make sure the system is back to its prepatch state.
   c. Check the validity of the file again
   d. Try redownloading and applying the patch immediately.
4. The LMM reports a hard error. Symptoms of this are an entry in the hardware error log for the processor/memory board (if you're lucky), or extremely odd switch behavior followed by SPE down mode (if you're not). The problem is that the LMM cannot complete the programming of

memory with the result that memory is in a corrupted state. The only recovery is to get or order new software and processor/ memory circuit packs.

Good application - bad patch

This error is not caused by a failure in the download or application, but by a fault in the patch file itself. To recover from this type of problem, the back out file that backs out the patch should be downloaded and applied. This requires that the system be sane enough to receive the file correctly and be able to apply it.

enable administered-connection

This command restarts scheduled and periodic maintenance for a single or all administered connections and can be used to track the maintenance processing of administered connections without interference from other maintenance processing. This command also restarts the processing of in-line errors for all or the selected administered connection.

Action/Object	Qualifier	Qualifier Description	Permissions	Defaults	Feature Interactions
enable administered-connection	***ac number*** ***all***	The number of the administered connection All administered connections are enabled. Examples: **enable administered-connection 128** **enable administered-connection all**	init inads craft cust rcust mis	none	none

enable mst

Enables the message trace that is controlled according to the parameters created with the **change mst** command. If executed while the trace is enabled, the command has no effect and returns a screen message indicating that the command was successful.

Action/Object	Qualifier	Qualifier Description	Permissions	Defaults	Feature Interactions
enable mst			init inads	none	none

enable suspend-alm-orig

This command enables Suspend Alarm Origination for a board (including all ports and endpoints on the board) or for a port (including all endpoints on the port) for both on- and off-board alarms or for off-board alarms only. Many control circuit packs do not have a board location, so this command cannot support all

circuit packs. Each enable command becomes a new entry or replaces an existing entry in the Suspend Alarm Origination table. A new entry that matches both the physical location and off-only, on-, and off-board specifications of an active entry replaces the active entry in the Suspend Alarm Origination table.

On the command line, specify a time-out duration of 1 - 72 hours. The ***off-board-only*** is optional; if the keyword is not specified, the entry suspends Alarm Origination for both on-and off-board alarms.

This command may be particularly useful for:

- Improved control over customer requests. For example, to suspend off-board DS1 alarms temporarily for customers that periodically disconnect DS1 trunks for testing or other business-related purposes.
- Improved control over external (non-Lucent) problems such as suspending off-board DS1 alarms before a customer resolves facility problems (for example, a T1 trunk that has developed an off-board condition).
- Improved control over internal (Lucent) problems that cannot be resolved immediately. For example, the command can be used to suspend Alarm Origination for a bad circuit pack detected late Friday night and dispatch personnel cannot respond until Monday.

NOTE:
Also see other Suspend Alarm Origination related commands, including **disable suspend-alm-orig** and **list suspend-alm-orig**.

Action/ Object	Qualifiers	Qualifier Description	Permissions	Defaults	Feature Interactions
enable suspend-alm- orig	**board/port location** ***off-board-only*** ***expires-in-hrs***	Physical location of the hardware optional; if not specified, both on-and off-board alarms suspended No. of hours (1-72) Examples: **enable suspend-alm-orig 1B03 expires-in-hrs 3** **enable suspend-alm-orig 1B0701 expires-in-hrs 72** **enable suspend-alm-orig 1B07 off-board-only expires-in-hrs 24**	init inads craft cust rcust	Both on- and off-board alarms if the **off-board-only** keyword is not specified	none

enable synchronization-switch

This command re-enables automatic clock switching or returns the maintenance subsystem back to the normal state. The synchronization subsystem consists of the TDM bus clock, DS1 trunk board, and SPE-resident maintenance and administration software and provides error free digital communication between the switch and other PBXs, COs, or customer-premise equipment (CPE).

Action/Object	Qualifier	Qualifier Description	Permissions	Defaults	Feature Interactions
enable synchronization-switch			init inads craft	none	none

enable test-number

This command enables a previously disabled test number. At the next request by maintenance or the technician, this test number will run.

Action/Object	Qualifier	Qualifier Description	Permissions	Defaults	Feature Interactions
enable test-number	**number**	The specific test number to re-enable Example: **enable test-number 102**	init inads craft	none	The **display disabled-tests** command gives a list of all disabled tests.

format card-mem

This command erases and formats the active processor Flash Read-Only Memory card before writing translation, announcements, coredump, and firmware data.

Action/Object	Qualifier	Qualifier Description	Permissions	Defaults	Feature Interactions
format card-mem		Erases and formats the memory card for:	init inads craft cust browse system	none	none
	translation	translations only			
	announcements	translations and announcements			
	coredump	translations, announcements, and coredump			
	firmware	translations, announcements coredump, and firmware			

get vector

This command displays the conditions and the Switch Processing Element (SPE) associated with a core dump of memory to tape or memory card. The dump occurs on the tape or disk of the previously active SPE or the SPE previously specified using the **set vector** command in systems with duplicated SPEs.

CAUTION:
The vector is cleared when a system restart of the proper level is performed regardless of whether the core is actually dumped.

Action/Object	Qualifier	Qualifier Description	Permissions	Defaults	Feature Interactions
get vector	***long***	Core dump timestamps printed; if SPEs are duplicated, timestamps are printed for both SPEs.	init inads craft	none	none
	print	Prints report on system printer.			
		Examples: **get vector** **get vector print** **get vector long** **get vector long print**			

Output

```
get vector

                          GET RESULTS

   Core Dump Vector            Set Vector Command Option
       0                       spe-active

   Core Dump Time
   SPE_A
   SPE_B

  Command successfully completed
```

Field descriptions

`Core Dump Vector`

A hexadecimal value representing the condition(s) that cause(s) a core dump. This hexadecimal value is a bit map of the four reset conditions (from least to most significant bit):

- warm start
- cold 2 restart
- cold 1 restart
- reboot.

A value of 0 indicates that the vector is cleared or not set. See the Vector-Condition Mapping table that follows.

Vector-Condition Mapping

value	warm-start	cold-2	cold-1	reboot
0	n	n	n	n
1	y	n	n	n

Vector-Condition Mapping

value	warm-start	cold-2	cold-1	reboot
2	n	y	n	n
3	y	y	n	n
4	n	n	y	n
5	y	n	y	n
6	n	y	y	n
7	y	y	y	n
8	n	n	n	y
9	y	n	n	y
a	n	y	n	y
b	y	y	n	y
c	n	n	y	y
d	y	n	y	y
e	n	y	y	y
f	y	y	y	y

`Set Vector Command Option`
The user-specified SPE prior to the core dump. For simplex SPE systems this field is always `spe-active` unless the vector is cleared or not set.

`Core Dump Time`
The time of the core dump for SPE A. If the system has a simplex SPE, a timestamp for SPE A is displayed for SPE B. If the core dump cannot be accessed, `can't access` displays for the corresponding SPE. If the MSS device storing the core dump timestamp is busy for any reason, `device busy` displays at the terminal.

list configuration

This command generates a report listing the group specified, the type, code, suffix, and vintage of the requested circuit packs as installed in the switch, and all ports assigned to the circuit pack.

Action/Object	Qualifier	Qualifier Description	Permissions	Defaults	Feature Interactions
list configuration	***hardware-group***	See Hardware Groups below.	init inads craft cust rcust	none	none
	print	Report sent to printer.			
	schedule	Command is validated and then a scheduling form displays to schedule execution of the command. The command is then placed in the command queue and is executed at the specified time. The information displayed by the command is sent to the system printer instead of the screen.[1] Examples: **list configuration carrier 1c schedule** **list configuration port-network 1** **list configuration stations print**			

1. Refer to the Report Scheduler and System Printer feature specification for more details.

NOTE:
The **list configuration software-version** command is discussed separately under its own heading.

Hardware Groups

Enter one of the following hardware groups:

carriers all Displays all circuit packs administered and/or physically inserted in the port, switch node, and control carriers on the system.

board PCSS Displays all assigned ports on the circuit pack specified by cabinet, carrier, and slot.

carrier c Displays all circuit packs and assigned ports on a specified carrier.

control Displays all circuit packs in the control complex.

ds1 Displays all the DS1 (TN722, TN767, and TN464) port circuit packs administered and/or physically inserted.

port-network pn# Displays all circuit packs located in a specified port network. (**List cabinet** gives the port network number(s) associated with a particular cabinet.) Circuit packs on switch node carriers are not displayed when the port-network qualifier is entered. To display switch node circuit packs, use the **all**, **carrier** or **board** qualifiers.

stations Displays all circuit packs that can be assigned stations, including DS1 circuit packs for remote stations.

trunks Displays all circuit packs that can be used for administering trunks.

Output

The following display shows the output from the **list configuration all** command.

```
   list configuration all                                        Page   1

                              SYSTEM CONFIGURATION

Board                                                   Assigned Ports
Number    Board Type              Code     Vintage    u=unassigned t=tti
01A01     PROCESSOR              TN798     000001     01 u  u  04       mj nm
01A02     TONE/CLOCK             TN2182    000003     01 02 03 04 05 06 07 08

01A03                            no board
01A04                            no board
01A05                            no board
01A06     DS1 INTERFACE          TN767     000011     u  u  u  u  u  u  u
                                                      u  u  u  u  u  u  u
                                                      u  u  u  u  u  u  u
01C07     ANALOG LINE            TN742     000010     u  u  u  u  u  u  u
01C08     HYBRID LINE            TN762B    000004     u  u  u  u  u  u  u
01C09     ANALOG LINE            TN742     000010     u  u  u  u  u  u  u
01C10     DIGITAL LINE           TN754     000004     u  u  u  u  u  u  u

  press CANCEL to quit --  press NEXT PAGE to continue
```

Field descriptions

`Board Number`	The functional name of the circuit pack
`Code`	The TN or UN code and suffix of the circuit packs
`Vintage`	The vintage number of the circuit pack
`no board`	The circuit pack is administered but not physically installed
`conflict`	The circuit pack administered to the slot differs from the circuit pack that is physically installed
`no link`	The T1 link is down to a DS1 circuit pack

The following display shows output from the **list configuration ds1** command.

```
list configuration ds1

                    SYSTEM CONFIGURATION - DS1 Circuit Packs

Location    Code     Vintage     Signaling         Name            CSU MOD

01B05       TN464F   000002      isdn-pri                          120A1
01B06       TN464D   000002      isdn-pri                          n/a
01B10       TN767C   000003      none                              n/a
01B11       TN767E   000003      robbed-bit                        120A1
01B12       TN767E   conflict    none                              <blank>
01C06                no board    none                              <blank>
01C13       TN464E   000003      common-channel                    unknown
01C16       TN767D   000024      robbed-bit                        unkonwn
01C18       TN464F   000002      isdn-pri                          none
```

Field descriptions

`Signaling` This field is displayed only when **list configuration ds1** is entered. The contents of the field are the same as the signaling mode administered for the ds1 circuit pack or `none` if the circuit pack is not administered.

`Name` This field is displayed only when **list configuration ds1** is entered. The contents of the field are the same as the signaling mode administered for the ds1 circuit pack or `none` if the circuit pack is not administered.

`CSU MOD` This field is displayed only when **list configuration ds1** option is selected. The field contains the identification number of the Integrated CSU module present on the DS1 circuit pack (TN767E or later / TN464F or later) or `none`. If the circuit pack is a TN464E or TN767D, `unknown` displays. If the circuit pack is a TN464D or TN767C or earlier suffix DS1 board, then `n/a` displays.

list config software-version

This command displays

- Software version numbers and compatibility indexes of the software load modules stored in system memory (RAM) and on the Mass Storage System devices (tape).
- The dates and times when translation and announcement data were last saved to the MSS.
- Information about any software update files that have been applied to the system. See “Software Upgrade” in Chapter 1, ‘‘Maintenance for R6csi Compact Modular Cabinets’’ for an explanation of software versions and compatibility indexes.

Action/Object	Qualifier	Qualifier Description	Permissions	Defaults	Feature Interactions
list configuration software-version	***memory-resident***	Data for the active SPE, RAM-resident files only.	init inads craft	none	none
	print	Report sent to printer.			
	schedule	Command is validated and then a scheduling form displays to schedule execution of the command. The command is then placed in the command queue and is executed at the specified time. The information displayed by the command is sent to the system printer instead of the screen.[1]			

1. Refer to the Report Scheduler and System Printer feature specification for more details.

Output

If the memory card contains a core dump file, fields for tape or memory card data display `coredump`. When a core dump is present, all other files on the device are marked invalid.

If the memory card cannot be read at the time the command is entered, the relevant fields display `no tape or memory card`. (This does not indicate that the system does not recognize the presence of the device.)

The following display shows the output from the **list configuration software-version** command.

```
list configuration software-version                          Page   1

                              SOFTWARE VERSIONS
                        SPE-A                          SPE-B
          UPDATE FILE
 Creation (GMT) Date: none
    Old Version Tape: none
 Old Identifier Tape: none
 New Identifier Tape: none
        Update State: none in memory

     SOFTWARE VERSION
     Memory Resident: G3V6i.00.1.017.0
   Mem Card Resident: none
   Update Identifier: none

     TRANSLATION DATE
     Memory Resident:  1:01 pm THU AUG 28, 1997
   Mem Card Resident:  1:01 pm THU AUG 28, 1997
```

Field descriptions, page 1

Update File Section	Displays information pertaining to software field-update files or “patches.”
`Creation (GMT) Tape and (GMT) Disk`	When the update file was originally created, in Greenwich Mean Time (GMT). Note that this is *not* the time at which the update file was written to the MSS device.
`Old-Version Tape and Disk`	The software version for which the update was created.
`Old-Identifier Tape and Disk`	Which previous update file this update file expected to find stored in the MSS when it was applied.
`New-Identifier Tape and Disk`	Uniquely identifies the current update file.
Software Version	Displays information related to the current software-load module stored in memory and in the MSS.
`Memory Resident`	Version number of the RAM-resident load module.
`Mem Card Resident`	Version of memory card resident load module. If a memory card is not installed, this field will display “no card”.
`Update-identifier (Patch Identifier)`	This uniquely identifies the update file, if any, that has been applied to memory.
`Update-state (Patch State)`	The status of the software field-update (“patch”) file id is displayed.
Translation Date	Displays information related to the translation files as stored in memory and the MSS.
`Memory Resident`	Date and time when translation data was last read from the MSS into memory. This is stored in SPE memory and is not modified by changes to translation data. A **save translation** command updates this date. If `Date invalid` is displayed, the timestamp does not contain the expected information.
`Mem Card Resident`	The date and time when translation data was last saved to the memory card. If a memory card is not installed, this field will display `no card`.

```
list configuration software-version                          Page   2

                           SOFTWARE VERSIONS
                      SPE-A
       PI FW VERSION
      PI 1 Resident: 000162
      PI 2 Resident: none
     Flash Resident: 000162




    ANNOUNCEMENT DATE
   Mem Card Resident: none

    PKT-CTRL FW VERSION
   Pkt-Ctrl Resident: n/a
      Flash Resident: 000021
```

Field descriptions, page 2

P1 FW Version	Displays information related to the Processor Interface (PI) circuit pack (resident copy and corresponding tape file) firmware.
`PI 1 Resident`	The version of firmware in the first PI circuit pack in the control carrier.
`PI 2 Resident`	The version of firmware in the second PI circuit pack in the control carrier.
`Flash Resident`	The version of PI firmware residing on the system flash memory.
Announcement Date	Displays information related to the announcement files. Information is displayed for the memory resident copy as well as the corresponding MSS file
`Mem Card Resident`	The last date and time that announcement data was saved to the memory card. If the memory card is not installed, this field displays `no card`.
PKT-CTRL FW Version	displays information related to the Packet Control firmware. Information is displayed for the Packet Control circuit pack resident copy as well as the corresponding tape file
`Pkt-ctrl Resident`	The version of firmware in the Packet Control circuit pack.
`Flash Resident`	The version of the Packet Control circuit pack residing on the system flash memory.

Some things to note when using the **list configuration software-version** command are:

1. For simplex systems, the fields under column “SPE_B are always blank and the optional **Long** qualifier is not part of the command line.

2. If the memory card contains a core dump file system, fields for the tape or memory card will contain `coredump`. This is because in a coredump file system, all files other than the coredump file are marked as invalid.
3. If for any reason, MSS cannot be read when the command is issued, the string **no tape** or **none** for no memory card will be placed in the appropriate fields on the screen. This does not mean that the system thinks there is no tape, only that the software was unable to read the appropriate information when requested.
4. If the command is issued using the ***memory-resident*** option, the fields on the form associated with the tape will contain the string **n/a**.
5. When the status of the update field is displayed, the following strings will be used (for more information refer to step c of this list):
   a. `none in memory` — no update has been applied to memory.
   b. `immediate partially applied` — an error condition that is valid only when an update that is in the process of being applied fails. Check the validity of the update file that was sent, and then check the hardware error log for tape errors, and follow standard maintenance procedures.
   c. `all immediate applied deferred pending` — a valid update file was received by the switch, and all the immediate sub-patches were applied. This state indicates that there are deferred sub-patches in the update file, and a system reset of the proper level has not occurred since the update file was received.
   d. `deferred partially applied` — an error condition that is valid only when a update that is in the process of being applied fails. Check the validity of the update file that was sent, and then check the hardware error log for tape errors, and follow standard maintenance procedures.
   e. `entirely applied to memory` — the update associated with the memory-resident identifier has been completely applied to memory.

list disabled-mos

This command displays all the MOs that have been maintenance disabled in the system.

Action/Object	Qualifier	Qualifier Description	Permissions	Defaults	Feature Interactions
list disabled-mos	***print***	Report sent to printer.	init inads	none	none
	schedule	Command is validated and then a scheduling form displays to schedule execution of the command. The command is then placed in the command queue and is executed at the specified time. The information displayed by the command is sent to the system printer instead of the screen.[1] Examples: **list disabled-MOs** **list disabled-MOs print** **list disabled-MOs schedule**			

1. Refer to the Report Scheduler and System Printer feature specification for more details.

Output

The following example shows the output from the **list disabled-MOs** command.

```
list disabled-MOs

          DISABLED MAINTENANCE OBJECT INFORMATION

        Maintenance Name   Location    Status
        ALL                            Enabled
        DIG-LINE           01A1203     Disabled


 Command successfully completed
```

Field descriptions

`Maintenance Name` The type of maintenance object (or group of maintenance objects) that have been disabled. `All` is also valid.

`Location` The physical location of the disabled maintenance object that has been disabled. This field displays blanks if all maintenance objects have been disabled (**disable all**) or all MOs of a specific type have been disabled (**disable MO-all**).

`Status` Whether the maintenance object or group of maintenance objects is `Enabled` or `Disabled`.

list history

This command generates a log listing of the most recently completed “data affecting” administration and maintenance commands. Data commands are those administration and maintenance commands that change the data state associated with any object and qualifier in the system. Administration data commands affect translation data, while maintenance data commands affect state information. For example, **change station** is a data command, whereas **display station** is not.

All information in the transaction log is saved on tape as translation data when the **save translation** command is performed (LIFO order). When the switch COLD I starts or reboots, the saved translation, and thus the transaction log, is loaded from tape. In this way, the translation data and the data in the transaction log remain compatible.

Action/Object	Qualifier	Qualifier Description	Permissions	Defaults	Feature Interactions
list history	***print***	Report sent to printer.	init inads craft cust browse nms	none	See below
	schedule	Command is validated and then a scheduling form displays to schedule execution of the command. The command is then placed in the command queue and is executed at the specified time. The information displayed by the command is sent to the system printer instead of the screen.[1] Examples: **list history** **list history print** **list history schedule**			

1. Refer to the Report Scheduler and System Printer feature specification for more details.

Feature Interactions

The translation log is written to the memory card as translation data when the **save translation** command is executed. The translation data is time stamped when saved. This time stamp is noted when translation is loaded from the memory card and included in all recent change history reports.

When a user requests a recent change history report, there could be other users concurrently issuing data commands and altering the contents of the transaction log. Therefore, if the user pages the entire way through the report, the oldest entries in the transaction log (maximum 250 commands) may have been overwritten by data commands issued by these other users. Should this occur, the final entries of the report show the data commands issued by the other users since the recent change history report was originally requested.

Also, use of the **set time** command to alter the system clock could make it look as if the recent change history report is not in true LIFO order.

Output

```
list history                          Page   1   SPE A

                                HISTORY

       Date of Loaded Translation: 11:34am Mon Apr 20, 1997

  Date  Time Port      Login   Actn  Object     Qualifier
  4/20 17:23 SYSAM-LCL init    go    tcm
  4/20 11:34 SYSAM-LCL init    cha   trunk-group  100
  4/20 11:25 SYSAM-LCL init    add   trunk-group  100
  4/20 11:25 SYSAM-LCL init    cha   circuit-pack 9
  4/20 11:25 SYSAM-LCL init    add   cabinet      9
  4/18 17:59 SYSAM-LCL init    clea  mst
  4/18 17:59 SYSAM-LCL init    test  board        2e01
  4/18 17:58 SYSAM-LCL init    clea  mst
  4/18 17:58 SYSAM-LCL init    enab  mst
  4/18 17:58 SYSAM-LCL init    cha   mst
  4/18 17:58 SYSAM-LCL init    disa  mst
  4/18 17:57 SYSAM-LCL init    test  board        2e01
  4/18 17:57 SYSAM-LCL init    clea  mst
  4/18 17:57 SYSAM-LCL init    test  board        2e01

press CANCEL to quit --  press NEXT PAGE to continue
```

Field descriptions

`Date` The date the command was issued in (mm/dd format)

`Time` The time the command was issued (in hh:mm format)

`Port` The port type to which the user was connected when the command was issued.

Port Number	Board	List History Display
0 - 30	EPN Maintenance Board Port	MAINT
31 - 40	System Access Port	SYS-PORT
41	Maintenance Board Port	SYSAM-LCL
42	Remote Maintenance Board Port	SYSAM-RMT

`Login` User login

`Actn` The first word (verb) of the command, specifying the operation to be performed. This field is truncated after four characters to allow enough space for objects and qualifiers. Four characters is enough to uniquely identify each action.

`Object` The qualifier, or second phrase of the command, specifying the particular thing being acted upon by the command. Twelve characters is enough to uniquely identify each object.

NOTE:
Where the object is multiple words in length, only the first word will be displayed in the object field. All succeeding words will be treated as qualifiers. This field is truncated after twelve characters to allow enough space for qualifiers.

`Qualifier` One or more qualifiers describing the characteristics of the action/object pair. This field is truncated after 31 characters to keep information for a command on a single line.

list isdn-testcall

This command displays the ISDN-PRI trunks in use for ISDN-PRI test calls. This command is useful to determine which trunk is in use for an outgoing ISDN-PRI test call.

Action/Object	Qualifier	Qualifier Description	Permissions	Defaults	Feature Interactions
list isdn-testcall	***print***	Report sent to printer.	init inads craft	none	none
	schedule	Command is validated and then a scheduling form displays to schedule execution of the command. The command is then placed in the command queue and is executed at the specified time. The information displayed by the command is sent to the system printer instead of the screen.[1] Examples: **list isdn-testcall** **list isdn-testcall print** **list isdn-testcall schedule**			

1. Refer to the Report Scheduler and System Printer feature specification for more details.

Output

```
list isdn-testcall

                ISDN-PRI TESTCALLS
     B-Channel  Start Time    Duration  M/T Port
     078/001    25/12:36      120       1B1102


 Command successfully completed
```

Field descriptions

B-Channel	Trunk in use for the ISDN-PRI test call (trunk group number/ member number).
Start Time	Time the test call started (dd/hh:mm format).
Duration	Expected duration of the test call.
M/T Port	The TN771 Maintenance/Test circuit pack's digital port address (in cabinet/carrier/slot/circuit format) in use for the outgoing asynchronous ISDN-PRI test call.

list marked-ports

This command lists all the ports that have been marked unusable with the **mark port** command (maximum of fifteen marked ports per page).

Action/Object	Qualifier	Qualifier Description	Permissions	Defaults	Feature Interactions
list marked-ports	***print***	Report sent to printer.	init inads craft cust rcust bcms browse	none	none
	schedule	Command is validated and then a scheduling form displays to schedule execution of the command. The command is then placed in the command queue and is executed at the specified time. The information displayed by the command is sent to the system printer instead of the screen.[1] Examples: **list marked-ports** **list marked-ports print** **list marked-ports schedule**			

1. Refer to the Report Scheduler and System Printer feature specification for more details.

Output

```
list marked-ports

             MARKED-PORT INFORMATION
     Port     Board-Type
     1C0101   DIG-BD
     1C0601
     1C0702   DIG-BD

 Command successfully completed
```

Field descriptions

`Port` The port address (cabinet-carrier-slot-circuit) of the marked port.

`Board-Type` The type of circuit pack containing the marked port. If this circuit pack information is no longer available because the circuit pack was removed after the port was marked, the `Board-Type` field is blank.

list measurements

This command lists performance measurements of a DS-1 link indicating the quality of the DS-1 physical interface between the system and a far end system. The **ds1 summary** option provides a summary report while the **ds1 log** option provides a detailed report.

NOTE:
The **list measurements** command has many more options than documented here. Only those options dealing with DS1 board are documented below.

Action/Object	Qualifier	Qualifier Description	Permissions	Defaults	Feature Interactions
list measurements	***log***	Detailed report generated	init inads craft cust rcust browse nms bcms	none	none
	summary	Summary report generated			
	ds1_location	The physical location of a DS1 circuit pack entered as cabinet-carrier-slot.			
	print	Report sent to printer.			
	schedule	Command is validated and then a scheduling form displays to schedule execution of the command. The command is then placed in the command queue and is executed at the specified time. The information displayed by the command is sent to the system printer instead of the screen.[1] Examples: **list measurements ds1 log 2a18** **list measurements ds1 summary 2a18 print** **list measurements ds1 summary 2a18 schedule**			

1. Refer to the Report Scheduler and System Printer feature specification for more details.

Output

```
list measurements ds1 summary 2a19                      SPE A

 Switch Name:                  Date: 1:25 pm  THU APR 16, 1992

      DS-1 Link Performance Measurements Summary Report

   Counted Since: 1:20 pm  THU APR 16, 1992
   Number of Seconds Elapsed Into Current 15-min Interval: 323
   Total of Valid 15-min Intervals in Past 24-hr Period:   0
                                        Total of  Current
                 Worst_15-Min_Interval  24-hr     15-Min Interval
   Category        Date   Time   Count  Count     Count
 Errored Seconds   4/16   13:20     0     0         4
 Bursty Err Secs   4/16   13:20     0     0         4
 Severely Err Secs 4/16   13:20     0     0         0
 Failed Seconds    4/16   13:20     0     0         0

 Command successfully completed
```

Field descriptions (list measurements ds1-summary)

`Counted Since:`
The start time and date when the associated measurement counters were cleared or the DS1 circuit pack was administered.

`Number of Seconds Elapsed Into Current 15-min Interval:`
The number of seconds from the beginning of the current 15-minute interval (0 - 900).

`Total of Valid 15-min Intervals in Past 24-hr Period:`
The total number of 15-minute intervals in the past 24-hour period that contain valid data (0 - 96).

`Category`
The four categories correspond to four measurement error counters:

- `Errored Seconds`: the value of the errored seconds counter for the specified 15-minute interval (0 - 900 or N/A if data for the 15-minute interval is invalid).
- `Bursty Err Secs`: the value of the bursty errored seconds counter for the specified 15-minute interval (0 - 900 or N/A if data for the 15-minute interval is invalid).
- `Severely Err Secs`: the value of the severely errored seconds counter for the specified 15-minute interval(0 - 900 or N/A if data for the 15-minute interval is invalid).
- `Failed Seconds`: the value of the failed seconds counter for the specified 15-minute interval (0 - 900 or N/A if data for the 15-minute interval is invalid).

`Worst_15-Min_Interval`
The date(Date), end time(Time), and error count (Count; from 0 to 900 in increments of four) of the 15-minute interval in the previous 24-hour period that contains the maximum value for each of the four error categories.

`Total of 24-Hour Count`
The sum of all valid 15-minute counts for the previous 24-hour period for each of the four error categories (0 - 65535).

`Current 15-Minute Interval`
The error count for the current (incomplete) 15-minute interval for each of the four error categories (0 - 900 or N/A if data for the 15-minute interval is invalid).

```
list measurements ds1 log 2a19                        SPE A

 Switch Name:                  Date: 1:26 pm  THU APR 16, 1992

       DS-1 Link Performance Measurements Detailed Log Report
   Counted Since: 1:20 pm  THU APR 16, 1992
                 ERRORED BURSTY    SEVERELY   FAILED    VALID
   DATE  TIME  SECOND  ERR SECS  ERR SECS   SECONDS   INTERVAL
   4/16   13:05    0     0         0            0        y
   4/16   13:20    0     0         0            0        y

 Command successfully completed
```

Field descriptions (list measurements ds1 log)

Counted Since: The start time and date when the associated measurement counters were cleared or the DS1 circuit pack was administered.

DATE The date of the 15-minute interval.

TIME The time of the 15-minute interval.

ERRORED SECONDS The value of the errored seconds counter for the specified 15-minute interval (0 - 900 or N/A if data for the 15-minute interval is invalid).

BURSTY ERR SECS The value of the bursty errored seconds counter for the specified 15-minute interval (0 - 900 or N/A if data for the 15-minute interval is invalid).

SEVERELY ERR SECS The value of the severely errored seconds counter for the specified 15-minute interval (0 - 900 or N/A if data for the 15-minute interval is invalid).

FAILED SECONDS The value of the failed seconds counter for the specified 15-minute interval (0 - 900 or N/A if data for the 15-minute interval is invalid).

VALID INTERVAL This field indicates whether the data for the specified 15-minute interval is valid. Data is considered valid when a count for that 15-minute interval. If the field has a value of **y**, the data for the four error categories is valid; otherwise, the data is invalid.

Data is considered valid when a count for that 15-minute interval is retrieved and none of the following invalid conditions occur:

— If a system warm start or a system cold start occurred during the interval

— If the DS1 circuit pack was not inserted during the interval

— If the system time was changed during the interval

— If the system was too busy to respond to a poll request for the interval.

list mst

This command displays the messages in the trace buffer and can be used when the trace is disabled or active, but if active, older messages may be sporadically omitted if wraparound is selected and the message rate is high. The command can be used repeatedly without destroying the integrity of the buffer.

Action/Object	Qualifier	Qualifier Description	Permissions	Defaults	Feature Interactions
list mst	***from message number***	Message number to start the display; if the number is not in the buffer, then that is indicated on the display, and no additional messages are displayed. Omitting this qualifier causes messages to be displayed starting with the oldest FIFO and continuous messages.	init inads	FIFO order	See below
	count number	Message count; can be used to limit the trace			
	continuous	Display updates as new messages enter the trace buffer (FIFO). This option is most useful in conjunction with “auto-page.” The command terminates only when canceled by the user.			
	LIFO	Newest message displayed first.			
	FIFO	Messages displayed in the order received.			
	auto-page	The screen will automatically page when full. Used in combination with ***continuous*** (above), provides a way to “watch” as messages arrive.			
	print	Report sent to printer.			
	schedule	Command is validated and then a scheduling form displays to schedule execution of the command. The command is then placed in the command queue and is executed at the specified time. The information displayed by the command is sent to the system printer instead of the screen.[1]			
		Examples: **list mst continuous** **list mst continuous auto-page** **list mst LIFO** **list mst from 222 count 7**			

1. Refer to the Report Scheduler and System Printer feature specification for more details.

Feature Interactions

See documentation on the system printer feature.

Output

```
list mst
                  Message Sequence Trace Data

 Number  Date/Time   Type  Message
   1   12/21/90
       14:30:21.220  62  00 00 74 17 08 02 00 11 05 04 03 80 90 a2 18
                         03 a1 83 86 70 01 80 96 28 0d 73 74 61 74 69
                         6f 6e 20 35 31 30 30 31
   2   14:30:22.420  60  00 00 74 17 08 02 80 11 02 18 03 a9 83 86
   3   14:30:23.420  60  00 00 74 17 08 02 80 11 03 1e 02 81 81
   4   14:30:25.420  60  00 00 74 17 08 02 80 11 01
   5   14:30:25.820  60  00 00 74 17 08 02 80 11 07 96 28 0d 73 74 61
                         74 69 6f 6e 20 35 31 30 30 34
   6   14:30:28.020  62  00 00 74 17 08 02 00 11 0f
   7   14:50:25.820  71  01
   8   14:52:26.020  56  00 00 70 00 08 01 04 64 96 1c 13 91 a1 10 02
                         01 03 02 01 c4 40 08 96 49 05 83 31 30 30 b4
   9   14:52:26.020  57  00 00 70 00 08 01 84 64 96 1c 0d 91 a2 0a 02
                         01 03 30 05 02 01 c4 40 00

 Command Successfully Completed
```

Field descriptions

`Number` The sequence number for the message.

`Date/Time` The Date/Time.

`Type` MST message type:
60 = ISDN uplink
62 = ISDN downlink,
6C = ISDN level 2 primitive

`Message` Message text in hexadecimal (ISDN or X.25). See Table 2-1 for an explanation of the numeric codes.

Table 2-1. Summary of MST Message Types

Code	Description
0x10	Vector Trace message
0x11	Vector Event message

Continued on next page

Table 2-1. Summary of MST Message Types — *Continued*

Code	Description
0x21	IMT proc_errs
0x22	IMT crec
0x23	IMT miscellaneous hooks (dbug)
0x24	Hardware error log
0x25	PREC message
0x26	CMS outgoing (individual)
0x27	CMS incoming (individual)
0x30	CCMS uplink message
0x31	CCMS downlink message
0x32	Packet uplink message
0x33	Packet downlink message
0x40	IMT internal-message trace for call_p, conn_m, grp_m, serv_d, suser_m
0x50	ASAI level 2 primitive uplink
0x51	ASAI level 2 primitive downlink
0x52	ASAI maintenance uplink
0x53	ASAI maintenance downlink
0x54	ASAI unrecognized uplink
0x55	ASAI unrecognized downlink
0x56	ASAI association uplink
0x57	ASAI association downlink
0x58	ASAI error uplink
0x60	ISDNPRI uplink
0x62	ISDNPRI downlink
0x64	ISDNBRI uplink
0x66	ISDNBRI downlink
0x68	ISDNBRI level 2 primitive uplink
0x6A	ISDNBRI level 2 primitive downlink
0x6C	ISDNPRI level 2 primitive uplink
0x6D	ISDNPRI level 2 primitive downlink
0x6E	ISDNPRI unrecognized message

Continued on next page

Table 2-1. Summary of MST Message Types — *Continued*

Code	Description
0x6F	ISDNBRI unrecognized message
0x71	GAP marker
0x72	Time changed while trace enabled
0xA0	X.25 Outgoing application data message
0xA1	X.25 Incoming application data message
0xA2	X.25 Application error message
0xB0	X.25 Outgoing session layer control message
0xB1	X.25 Incoming session layer control message
0xCF	X.25 Message confirmation
0xD0	X.25 Outgoing processor channel control message
0xD1	X.25 Incoming processor channel control message
0xD2	X.25 Link control message
0xD3	X.25 Link status message
0xE2	X.25 Session Timer Expirations
0xF0	X.25 Error Message (Outgoing Message Lost)
0xF1	X.25 Unrecognized Messages
0xF2	X.25 Error Message (DIP ICOM Record Aborted) (R2 Only)
0xF9	Snapper instrumentation message
0xFA	Snapper continuation message (for large msgs)

Detailed description of Messages

The terminology Message[n] used below refers to the byte at offset n in the message being displayed.

MST message types contain a version number. Whenever the structure of the MST message changes, the version field in the MST buffer will be changed. Version 1 (default) displays a blank in the version field which is immediately after the MST message type field. Subsequent versions display the version number after the MST message type field and are connected with a hyphen (-). For example: Version 2 of the X.25 Application error/notification message has added the text of the pm state table stimulus which was ignored.

Version 1 of MST message type 0xA2 would appear on the 'list mst' output:

```
Number   Date/Time      Type   Message
1        11:41:22:425   A2     17 10
```

Version 2 of MST message type 0xA2 would appear on the list mst output:

```
Number   Date/Time      Type    Message
90       12:41:14:112   A2-02   17 10 21 03 32 05 01 80
```

Vector Trace

Message type: 0x10

Message format:

Message[1-4]	= call identifier (CID) (defined in $BASEPJ/hdrs/capro.h)
Message[5-6]	= vector number (defined in $BASEPJ/hdrs/dpm_calls.h)
Message[7]	= step number (defined in $BASEPJ/hdrs/callr.h)
Message[8]	= step type (defined in $BASEPJ/hdrs/dpm_calls.h)
Message[9]	= step state (defined in $BASEPJ/hdrs/dpm_calls.h)
Message[10-12]	= VDN
Message[13]	= port network number
Message[14]	= endpoint number
Message[15]	= angel number
Message[16]	= circuit number
Message[17-20]	= trunk number
Message[21+]	= auxiliary data (based on step type)

Vector Event Trace (D92 Only)

Message type:

0x11

Message format:

Message[1-4] = cid (defined in $BASEPJ/hdrs/capro.h)

Message[5-6] = event

Message[7+] = auxiliary data (based on event)

Events are defined in $BASEPJ/hdrs/evnt_defs.h. Events based on the call_p will have the following auxiliary data:

Message[7-8] = vector number

Message[9-10] = step number

Events based on the grp_m will have the following auxiliary data:

Message[7-10] = hunt group number

IMT (D92)

The messages described in this section cannot be controlled directly through any of the MST screens. They are enabled/disabled through TCM but their output goes to the MST buffer. See [IMT] for details on these messages.

A read-only field in the “change mst” screen, “Other Tracing?”, alerts the user that one or more of these types of messages is enabled.

0x21 - IMT proc_errs

Message format:

Message[1-4] = process number(lname)

Message[5-8] = sequence number (defined in *.p/hdrs/main_err.h, for example: $BASEPJ/gmtce.ss/hmm.p/hdrs/main_err.h)

Message[9-12] = data 1

Message[13-17] = data 2

0x22 - IMT crec

Message format:

Message[1+] = call record (defined as CALLR typedef in $BASEPJ/hdrs/callr.h)

0x23 - MT_IMT (miscellaneous IMT hooks)

This message type is for miscellaneous IMT hooks. The only sub-type currently available is for a debug button (dbut). The button number is provided in the debug button MST message so that more than one button can be administered (through IMT) to convey different meanings. For example, depression of button N could signify the start of the problem symptoms, while depression of button N + X could signify the end of the problem symptoms. Note that the button number being logged represents the position of a button on a particular set type, and will be different depending on set type and module type (feature, coverage, display, and so forth). The mapping of the button number stored in the IMT_BUT_DEBUG MST message to a position on the set is not trivial, however, the debug buttons can be administered through TCM, debug button filtering enabled through TCM and MST enabled using the 'enable mst' command and the resultant messages sent to MST when each button is depressed can be examined for the button data and noted.

Message format:

Message[1]	= 0x01 (debug button sub-type, IMT_BUT_DEBUG)
Message[2-3]	= button number
Message[4-7]	= user id

0x40 - internal message tracing of call_p, conn_m, grp_m, serv_d, suser_m

Message formats: conn_m, grp_m, and suser_m:

Message[1-4]	= user identifier
Message[5-6]	= hook identifier (defined in $BASEPJ/hdrs/mstencode.h)
Message[7+]	= standard message (depends on hook type)

serv_d (map-type messages):

Message[1-4]	= user identifier
Message[5-6]	= hook identifier (defined in $BASEPJ/hdrs/mstencode.h)
Message[7]	= STIM type
Message[8-11]	= service identifier
Message[12]	= port network number
Message[13]	= endpoint number
Message[14]	= angel number
Message[15]	= circuit number
Message[16+]	= message

serv_d (other serv_d messages):

Message[1-4]	= user identifier
Message[5-6]	= hook identifier (defined in $BASEPJ/hdrs/mstencode.h)
Message[7]	= STIM type
Message[8-11]	= service identifier
Message[12-13]	= interpreted STIM
Message[14-17]	= aux data 0
Message[18-21]	= aux data 1
Message[22-25]	= aux data 2
Message[26-29]	= aux data 3
Message[30]	= hwtype field
Message[31]	= hwdata field

call_p:

Message[1-4]	= call identifier
Message[5-6]	= hook identifier (defined in $BASEPJ/hdrs/mstencode.h)
Message[7]	= supervisor
Message[8]	= digit prep
Message[9+]	= message

CCMS

Message types:

0x30 uplink
0x31 downlink

Message format:

Message[1]	= port network number
Message[2]	= endpoint number
Message[3]	= angel number
Message[4]	= circuit number
Message[5-6]	= hook identifier (defined in $BASEPJ/hdrs/mstencode.h)

Message[7] = message length

Message[8] = angel id

Message[9+] = standard CCMS message

Packet (D92)

Message type:

0x32 uplink

Message format:

Message[1-4] = user identifier

Message[5-6] = hook identifier (defined in $BASEPJ/hdrs/mstencode.h)

Message[7-10] = link identifier

Message[11-12] = message type (defined in $BASEPJ/hdrs/pcd_calls.h)

Message[13+] = standard packet message

Message type:

0x33 downlink

Message format:

Message[1] = port network number

Message[2] = endpoint number

Message[3] = angel number

Message[4] = circuit number

Message[5-6] = hook identifier (defined in $BASEPJ/hdrs/mstencode.h)

Message[7-10] = link identifier

Message[11+] = standard packet message

ASAI

ASAI messages listed on the MST screen consist of a 4 octet header and a variable length body. The header contains the ASAI port address encoded with 8 hexadecimal digits. This same encoding is also used for BRI and PRI.

In message types other than 50 and 51 (Level 2 Primitives), following the port address is a one octet field called the qualifier. The meaning of the qualifier varies according to the type (as specified by the MST encode) of ASAI message

traced. The body which is a real ASAI message (except for Level 2 Primitives) follows the qualifier.

When the display is administered for abbreviated format, the body contains only the initial part of the ASAI message (all information in beginning of message up to and including the Q.931 IE tag) plus the cause IE (if present).

0x50 - ASAI level 2 uplink primitive

Message[1] = Port Network Number of ASAI port

Message[2] = reserved

Message[3] = Carrier Address of ASAI port

Message[4] = Port number of ASAI port

Message[5] = SAPI

Message[6] = TEI

R1:

Message[7,8] = Link ID

Message[9] = Uplink encode
0x01 - ASAI Link State
0x02 - TEI Management Message
0x03 - XID Message

Message[10] = R1/R3 Link States:
0x00 - the link has gone down
0x01 - the link has come up
0x02 - the link id has changed
0x03 - the link has gone hyperactive
0x04 - the link has recovered
0x05 - the audit recovery stim
0x06 - the link has been reset
0x07 - link state hyper (too many SABMEs) disconnect
0x08 - broadcast link audit

= R1/R3 TEI Management Message
0x01 - Identity request
0x05 - Identity Check Response
0x07 - Identity Verify Request

= R1/R3 XID Messages
0x01 - XID Request
0x02 - XID Response

R3:

Message[7-10] = Link ID

Message[11] = Uplink encode
0x01 - ASAI Link State
0x02 - TEI Management Message
0x03 - XID Message

Message[12] = ASAI Link State:
0x00 - the link has gone down
0x01 - the link has come up
0x02 - the link id has changed
0x03 - the link has gone hyperactive
0x04 - the link has recovered
0x05 - the audit recovery stim
0x06 - the link has been reset
0x07 - link state hyper (too many SABMEs) disconnect
0x08 - broadcast link audit

= TEI Management Message
0x01 - Identity request
0x05 - Identity Check Response
0x07 - Identity Verify Request

= XID Messages
0x01 - XID Request
0x02 - XID Response

0x51 - ASAI level 2 downlink primitive

Message[1] = Port Network Number of ASAI port

Message[2] = Reserved

Message[3] = Carrier Address of ASAI port

Message[4] = Port number of ASAI port

Message[5] = SAPI

Message[6] = TEI

R1:

Message[7,8] = Link ID

NOTE:
The Link ID has no meaning for the link establish request, therefore the Link ID field will contain 0xff 0x.ff

Message[9] = Downlink encode
0x01 - ASAI Link Events
0x02 - TEI Management Message
0x03 - XID Message

Message[10] = ASAI Link Events:
0x02 - link release request
0x0f - link establish request sent to and received by the lower level

= TEI Management Message
0x02 - Identity Assigned
0x04 - Identity Check Request
0x06 - Identity Remove

= XID Messages
0x01 - XID Request
0x02 - XID Response

Message[11] = 0xCA - Cancel Byte

NOTE:
The cancel byte will only be present if the message was built, but could not be sent.

R3:

Message[7-10] = Link ID

NOTE:
The Link ID has no meaning for the link establish request, therefore the Link ID field will contain 0xff 0xff 0xff 0x.ff

Message[11] = Downlink encode
0x01 - ASAI Link Events
0x02 - TEI Management Message
0x03 - XID Message

Message[12] = ASAI Link Events:
0x02 - link release request
0x0f - link establish request sent to and received by the lower level

= TEI Management Message
0x02 - Identity Assigned
0x04 - Identity Check Request
0x06 - Identity Remove

= XID Messages
0x01 - XID Request
0x02 - XID Response

Message[13] = 0xCA - Cancel Byte

NOTE:
The cancel byte will only be present if the message was built, but could not be sent.

0x52 - ASAI maintenance uplink

Message[1] = Port Network Number of ASAI port

Message[2] = Reserved

Message[3] = Carrier Address of ASAI port

Message[4] = Port number of ASAI port

Message[5] = 0

Message[6+] = standard or abbreviated ASAI message format

0x53 - ASAI maintenance downlink

Message[1] = Port Network Number of ASAI port

Message[2] = Reserved

Message[3] = Carrier Address of ASAI port

Message[4] = Port number of ASAI 3 ort

Message[5] = 0

Message[6+] = standard or abbreviated ASAI message format

0x54 - ASAI unrecognized uplink

Message[1] = Port Network Number of ASAI port

Message[2] = Reserved

Message[3] = Carrier Address of ASAI port

Message[4] = Port number of ASAI port

Message[5] = failure cause

Failure causes

0x2a (42.) - Overload Controls in Effect
0x32 (50.) - Requested Feature Not Administered
0x45 (69.) - Requested Feature Not Implemented
0x51 (81.) - Invalid CRV
0x5f (95.) - Invalid Message
0x60 (96.) - Mandatory Information Element Missing
0x61 (97.) - Message Non-Existent/Not Implemented
0x63 (99.) - Information Element non-existent
0x64 (100.) - Invalid Information Element Contents
0x6f (111.) - Protocol Error

Message[6+] = standard or abbreviated ASAI message format

NOTE:
An unrecognized message displayed in abbreviated format may be missing information (such as cause) because the message was not able to be parsed.

0x55 - ASAI unrecognized downlink

Message[1] = Port Network Number of ASAI port

Message[2] = Reserved

Message[3] = Carrier Address of ASAI port

Message[4] = Port number of ASAI port

Message[5] = failure reason

Failure reasons

1 - link flow controlled
2 - internal software error - see software error log
3 - packet interface problem - see error log

Message[6+] = standard or abbreviated ASAI message format

0x56 - ASAI association uplink

Message[1] = Port Network Number of ASAI port

Message[2] = Reserved

Message[3] = Carrier Address of ASAI port

Message[4] = Port number of ASAI port

Message[5] = association type

Association Type

0 - unknown
1 - call control
2 - domain control
3 - notification
4 - adjunct routing
5 - set value

6 - value query
7 - request feature

Message[6+] = standard or abbreviated ASAI message format

0x57 - ASAI Association downlink

Message[1] = Port Network Number of ASAI port

Message[2] = Reserved

Message[3] = Carrier Address of ASAI port

Message[4] = Port number of ASAI port

Message[5] = association type

Message[6+] = standard or abbreviated ASAI message format

0x58 - ASAI error uplink

Message[1] = Port Network Number of ASAI port

Message[2] = Reserved

Message[3] = Carrier Address of ASAI port

Message[4] = Port number of ASAI port

Message[5] = failure cause

Failure causes

1 - 127 are code standard zero cause values
128 - 255 are code standard three cause values (+ 128)

Message[6+] = standard or abbreviated ASAI message format

ISDN

0x60 - ISDN PRI uplink

Message[1] = Port Network Number of D-channel port

Message[2] = Reserved

Message[3] = Carrier Address of D-channel port

Message[4] = Port number of D-channel port

Message[5+] = standard ISDNPRI format

NOTE:
In abbreviated format, the header of the Q.931 message, the cause IE (if present) and the channel id Information Element (IE) (if present) are the only IEs present.

0x62 - ISDN PRI downlink

Message[1] = Port Network Number of D-channel port

Message[2] = Reserved

Message[3] = Carrier Address of D-channel port

Message[4] = Port number of D-channel port

Message[5+] = standard ISDNPRI format

NOTE:
In abbreviated format, the header of the Q.931 message, the cause IE (if present) and the channel id IE (if present) are the only IEs present.

0x64 - ISDN BRI uplink

Message[1] = Port Network Number of BRI port

Message[2] = Reserved

Message[3] = Carrier Address of BRI port

Message[4] = Port number of BRI port

Message[5] = SAPI

Message[6] = TEI

R1:

Message[7,8] = Link ID

Message[9+] = standard ISDNBRI format

R3:

Message[7-10] = Link ID

Message[11+] = standard ISDNBRI format

NOTE:
In abbreviated format, the header of the Q.931 message, the cause IE (if present) and the channel id Information Element (IE) (if present) are the only IEs present.

0x66 - ISDN BRI downlink

Message[1] = Port Network Number of BRI port

Message[2] = Reserved

Message[3] = Carrier Address of BRI port

Message[4] = Port number of BRI port

Message[5] = SAPI

Message[6] = TEI

R1:

Message[7,8] = Link ID

Message[9+] = standard ISDNBRI format

R3:

Message[7-10] = Link ID

Message[11+] = standard ISDNBRI format

NOTE:
In abbreviated format, the header of the Q.931 message, the cause IE (if present) and the channel id IE (if present) are the only IEs present.

An additional cancel byte (0xCA) may be present after the standard ISDNBRI formatted message if the message was not sent. The cancel byte will not be appended if the abbreviated format is selected.

0x68 - ISDN BRI level 2 uplink primitive

Message[1] = Port Network Number of BRI port

Message[2] = Reserved

Message[3] = Carrier Address of BRI port

Message[4] = Port number of BRI port

Message[5] = SAPI

Message[6] = TEI

R1:

Message[7,8] = Link ID

Message[9] = Uplink encode
0x01 - BRI Link State
0x02 - TEI Management Message
0x03 - XID Message

Message[10] = R1/R3 Link States:
0x00 - the link has gone down
0x01 - the link has come up
0x02 - the link id has changed
0x03 - the link has gone hyperactive
0x04 - the link has recovered
0x05 - the audit recovery stim
0x06 - the link has been reset
0x07 - link state hyper (too many SABMEs) disconnect
0x08 - broadcast link audit

= R1/R3 TEI Management Message
0x01 - Identity request
0x05 - Identity Check Response
0x07 - Identity Verify Request

= R1/R3 XID Messages
0x01 - XID Request
0x02 - XID Response

R3:

Message[7-10] = Link ID

Message[11] = Uplink encode
0x01 - BRI Link State
0x02 - TEI Management Message
0x03 - XID Message

Message[12] = BRI Link State:
0x00 - the link has gone down
0x01 - the link has come up
0x02 - the link id has changed
0x03 - the link has gone hyperactive
0x04 - the link has recovered
0x05 - the audit recovery stim
0x06 - the link has been reset
0x07 - link state hyper (too many SABMEs) disconnect
0x08 - broadcast link audit

= TEI Management Message
0x01 - Identity request
0x05 - Identity Check Response
0x07 - Identity Verify Request

= XID Messages
0x01 - XID Request
0x02 - XID Response

0x6A - ISDN BRI level 2 downlink primitive

Message[1] = Port Network Number of BRI port

Message[2] = Reserved

Message[3] = Carrier Address of BRI port

Message[4] = Port number of BRI port

Message[5] = SAPI

Message[6] = TEI

R1:

Message[7,8] = Link ID

NOTE:
The Link ID has no meaning for the link establish request, therefore the Link ID field will contain 0xff 0xff

Message[9] = Downlink encode
0x01 - BRI Link Events
0x02 - TEI Management Message
0x03 - XID Message

Message[10] = BRI Link Events:
0x02 - link release request
0x0f - link establish request sent to and received by the lower level

= TEI Management Message
0x02 - Identity Assigned
0x04 - Identity Check Request
0x06 - Identity Remove

= XID Messages
0x01 - XID Request
0x02 - XID Response

Message[11] = 0xCA - Cancel Byte

NOTE:
The cancel byte will only be present if the message was built, but could not be sent.

R3:

Message[7-10] = Link ID

NOTE:
The Link ID has no meaning for the link establish request, therefore the Link ID field will contain 0xff 0xff 0xff 0x.ff

Message[11] = Downlink encode
0x01 - BRI Link Events
0x02 - TEI Management Message
0x03 - XID Message

Message[12] = BRI Link Events:
0x02 - link release request
0x0f - link establish request sent to and received by the lower level

= TEI Management Message
0x02 - Identity Assigned
0x04 - Identity Check Request
0x06 - Identity Remove

= XID Messages
0x01 - XID Request
0x02 - XID Response

Message[13] = 0xCA - Cancel Byte

NOTE:
The cancel byte will only be present if the message was built, but could not be sent.

0x6C - ISDN PRI level 2 uplink primitive

Message[1] = Port Network Number of D-channel port

Message[2] = Reserved

Message[3] = Carrier Address of D-channel port

Message[4] = Port number of D-channel port

Message[5] = change type

R1/R3 change types:
0x01 - session up notification
0x02 - Session down notification
0x6D - ISDN PRI level 2 downlink primitive (not implemented)

Message[1] = Port Network Number of D-channel port

Message[2] = Reserved

Message[3] = Carrier Address of D-channel port

Message[4] = Port number of D-channel port

Message[5] = change type

R1/R3 change types:
0x01 - link establish request
0x02 - link release request

0x6E - ISDN PRI Unrecognized Messages

Message[1] = Port Network Number of D-channel port

Message[2] = Reserved

Message[3] = Carrier Address of D-channel port

Message[4] = Port number of D-channel port

Message[5] = type of failure

Types of failure:
0x01 - outgoing ISDNPRI
0x02 - incoming ISDNPRI

Message[6+] = standard ISDN format

0x6F - ISDN BRI Unrecognized Messages

Message[1] = Port Network Number of BRI port

Message[2] = Reserved

Message[3] = Carrier Address of BRI port

Message[4] = Port number of BRI port

Message[5] = SAPI

Message[6] = TEI

R1:

Message[7,8] = Link ID

Message[9] = type of failure

Types of failure:

0x01 - outgoing ISDN
0x02 - incoming ISDN

Message[10+] = standard ISDNBRI format

R3:

Message[7-10] = Link ID

Message[11] = type of failure

Types of failure:

0x01 - outgoing ISDN
0x02 - incoming ISDN

NOTE:
In abbreviated format, the header of the Q.931 message, the cause IE (if present) and the channel id IE (if present) are the only IEs present.

An additional cancel byte (0xCA) may be present after the standard ISDNBRI formatted message if the message was not sent. The cancel byte will not be appended if the abbreviated format is selected.

General

0x71 - GAP marker

Message[1] = GAP reason

Message[2] = GAP count (since last clear - high byte)

Message[3] = GAP count (since last clear - low byte)

GAP reasons:

0x01 - disabled, disable mst command executed
0x02 - disabled, mst timer expired
0x03 - disabled, buffer full on no-wrap
0x04 - disabled, restart occurred
0x05 - disabled, by stop trigger or count
0x06 - disabled, audit error
0x07 - not disabled, stopped by stop trigger or count

0x72 - Time changed while trace enabled

Message[1] = 0x00

Message[2] = timestamp indication

timestamp indication:

0x00 - MST timestamp is old time
0x01 - MST timestamp is new time

list suspend-alm-orig

This command lists active entries in the Suspend Alarm Origination table. Even though this command only lists active entries, an entry that expires during the list process still appears in the output. If the Suspend Alarm Origination table is empty, the output contain only the title and field headings.

Action/Object	Qualifier	Qualifier Description	Permissions	Defaults	Feature Interactions
list suspend-alm-orig	***print***	Report sent to printer.	init inads craft	none	none
	schedule	Command is validated and then a scheduling form displays to schedule execution of the command. The command is then placed in the command queue and is executed at the specified time. The information displayed by the command is sent to the system printer instead of the screen.[1] Examples: **list suspend-alm-orig** **list suspend-alm-orig print** **list suspend-alm-orig schedule**			

1. Refer to the Report Scheduler and System Printer feature specification for more details.

Output

```
list suspend-alm-orig

                      Suspend Alarm Origination Entries

                    Physical   Board        Expires At

                    01C03      off-only     06/11/15:06
                    01E0407    on-and-off   06/11/17:26
                    01E0406    on-and-off   06/12/45:34
```

list sys-link

This command displays all of the system links, including the location, link type and channel number, link state, current path status, faulted path status, and last recorded fault, if any. See "SYS-LINK (System Links)" for details.

Action/Object	Qualifier	Qualifier Description	Permissions	Defaults	Feature Interactions
list sys-link	***print***	Report sent to printer	init inads craft	none	none
	schedule	Command is validated and then a scheduling form displays to schedule execution of the command. The command is then placed in the command queue and is executed at the specified time. The information displayed by the command is sent to the system printer instead of the screen.[1] Examples: **list sys-link print** **list sys-link schedule**			

1. Refer to the Report Scheduler and System Printer feature specification for more details.

Output

The following examples shows the output from the **list sys-link** command.

```
list sys-link                                        Page   1   SPE A

                        SYSTEM LINKS INFORMATION

Location  Link Type/  State  Current    Faulted   Last Fault
          Channel            Path       Path      Recorded

01A0516   PRI         up     present    present   12/30/1996 14:18

   press CANCEL to quit -- press NEXT PAGE  to continue
```

Field descriptions

`Location`	Physical location of the port associated with the system link (cabinet-carrier-slot-circuit)
`Link Type/Channel`	Type of system-link and the processor channel number of the link (if there is one): for TN798, link type is PRI (PRI).
`State`	System link state: up or down
`Current Path`	Status of the current path: `none` if the link is down; `present` if the current path is valid
`Faulted Path`	Specifies the faulted path status: `present` if the link has been faulted at least once, `none` if the link has never gone down, and `default` if the default faulted path is being used
`Last Fault Recorded`	Date and time of the most recent fault

list testcalls

This command generates an Automatic Transmission Measurement System (ATMS) report. The ATMS allows the voice and data trunk facilities to be measured for satisfactory transmission performance. The performance of the trunks is evaluated according to measurements produced by a series of analog tests and are compared against user-defined threshold values. The purpose of the report is to provide measurement data to help determine the quality of trunk lines. The measurement report contains data on trunk signal loss, noise, singing return loss, and echo return loss.

The measurements are produced by a set of analog trunk tests. The tests are initiated by a maintenance demand test or by a set of scheduled tests. The largest portion of these measurements are generated through scheduled testing during system quiet hours (hours where the traffic volume is low). Each trunk test performed by the system stores the results in a database. The trunk measurements in this database reflect the state of each trunk at the time of its last test.

Action/Object	Qualifiers/Options	Qualifier/Option Description
list testcalls	***detail***	Detailed measurement report displayed
	summary	Summary measurement report displayed
	grp group number	Measurements for a specific trunk group displayed. When used with the ***to-grp*** option, this option is the starting trunk group in a range of user-specified trunk groups.
	to-grp group number	Measurements for all trunk groups from 1 to the specified “to-grp” trunk group are displayed. When used with the ***grp*** option, this option is the ending trunk group in a range of user-specified trunk groups.
	mem member number	Measurements for a specific trunk group member displayed. When used with the ***to-mem*** option, this option is the starting trunk group member in a range of user-specified trunk group members.
	to-mem member number	Measurements for all trunk group members from 1 to the specified “to-mem” trunk group member displayed. When used with the ***mem*** option, this option is the ending trunk group member in a range of user-specified trunk group members.
	port location	Measurements for a specific trunk circuit (port) displayed
	result result identifier	This option is used to filter out all measurement results that do not match the user-specified result, that is, only measurement results that match the user specified result are displayed. Examples of results are pass, marg, fail, etc.
	not-result result identifier	This option is used to filter out all measurement results that do match the user-specified result, that is, only measurement results that do not match the user specified result are displayed. Examples of results are pass, marg, fail, etc.
	count count number	This option is used to specify (limit) the number of records displayed.
	print	Report sent to printer
	schedule	Command is validated and then a scheduling form displays to schedule execution of the command. The command is then placed in the command queue and is executed at the specified time. The information displayed by the command is sent to the system printer instead of the screen.[1]

1. Refer to the Report Scheduler and System Printer feature specification for more details.

Examples

list testcalls detail
list testcalls detail print
list testcalls detail grp 78
list testcalls detail grp 78 result marg count 3 schedule
list testcalls detail grp 78 to-grp 80
list testcalls detail grp 78 to-grp 80 mem 1 print
list testcalls detail grp 78 to-grp 80 mem 1 not-result pass
list testcalls detail grp 78 to-grp 80 mem 1 count 2 schedule
list testcalls detail grp 78 to-grp 80 mem 1 to-mem 5

list testcalls detail grp 78 to-grp 80 mem 1 to-mem 5 count 3 print
list testcalls detail grp 78 to-grp 80 mem 1 to-mem 5 count 3 result pass
list testcalls detail mem 1 count 3 result pass
list testcalls detail to-grp 78 to-mem 4 count 3 result pass
list testcalls detail to-mem 3 result pass
list testcalls detail port 1c1504
list testcalls detail port 1c1504 count 5 schedule
list testcalls detail port 1c1504 count 5 not-result marg print
list testcalls summary
list testcalls summary grp 78
list testcalls summary grp 78 print
list testcalls summary grp 78 count 5
list testcalls summary grp 78 count 5 schedule
list testcalls summary grp 78 to-grp 80
list testcalls summary grp 78 to-grp 80 count 3
list testcalls summary to-grp 78
list testcalls summary to-grp 78 count 7 schedule

Output

The following example is of the output for the **list testcalls detail grp 80** command.

```
list testcalls detail grp 80                  Page   1   SPE A

                         ATMS MEASUREMENT REPORT

 Group: 80   Type: co     Vendor:           TTL Type: 105-w-rl

 THRESHOLD VALUES           Loss dev at

                     1004Hz-loss  404Hz 2804Hz C-msg C-ntch SRL SRL
                      Min   Max   -  +  -  +   Noise Noise  LO  HI   ERL
           Marginal   -2   21    9  9  9  9     55    74   0   0    0
       Unacceptable   -2   21    9  9  9  9     55    74   0   0    0
 Trk Test  Test  Test -16dBm  0dBm
 Mem Date  Time  Rslt  NE FE NE FE  NE FE NE FE  NE FE NE FE  NE FE NE FE  NE FE
 1
 2
 3
 4
 5
 6
 7
 8
 9

        press CANCEL to quit -- press NEXT PAGE to continue
```

Detail report field descriptions

`Group` The trunk group number selected.

Type	The trunk group type.
Vendor	The vendor of this trunk group.
TTL Type	The kind of test line for this trunk group.
Threshold Values	The list of marginal and unacceptable threshold values defined on the trunk group form.
	The following fields appear on the lower section of the form. Many of the column headings contain the abbreviations “FE” for far end and “NE” for near end. These abbreviations define which end took the measurements.
Trk Mem	The trunk member within the trunk group.
Test Date	The month and day this trunk was tested.
Test Time	The time of day this trunk was tested.
Tst Rslt	This field describes the results of the trunk transmission test.
1004Hz-loss Min	Far-to-near and near-to-far measurements of 1004-Hz loss from low-level tone.
1004Hz-loss Max	Far-to-near and near-to-far measurements of 1004-Hz loss at 0 dBm.
Loss dev at 404Hz	Transmission tests at low frequency. These tests measure a maximum positive and negative deviation of +9 and -9 dB from the 1004-Hz loss measurements.
Loss dev at 2804Hz	Transmission tests at high frequency. These tests measure a maximum positive and negative deviation of +9 and -9 dB from the 1004-Hz loss measurements.
C-msg Noise	Maximum noise interference (in dBrnC: decibels above reference noise, which is B(EQ)10 sup -12E(EQ) watts) terminating on a voice terminal within the voice-band frequency range (500 to 2500 Hz) between 15 and 55 dBrnC.
C-ntch Noise	Maximum signal-dependent noise interference on a line between 34 and 74 dBrnC.
SRL-LO	Singing return loss from 0 to 40 dB between the sum of the circuit (repeater) gains and the sum of the circuit losses. SRL-LO occurs most often in the frequency range of 200 to 500 Hz.
SRL-HI	Singing return loss from 0 to 40 dB between the sum of the circuit (repeater) gains on a circuit and the sum of the circuit losses. SRL-HI occurs most often in the frequency range of 2500 to 3200 Hz.
ERL	Echo return loss from 0 to 40 dB between the level of signal strength transmitted and the level of signal strength reflected. ERL occurs most often in the frequency range of 500 to 2500 Hz.

The following example is the output from the **list testcalls summary grp 80** command.

```
list testcalls summary grp 80                        SPE A

                        ATMS MEASUREMENT SUMMARY REPORT

                         Trunks  Trunks   Trunks
 Trk  Num   Last   Last  Passed  Failed   Failed    Trks Trks  Busied
 Grp  Of    Test   Test  Transm  Marginal Unaccept  In-  Not   Out
 Num  Trks  Date   Time   Test   Threshld Threshld  Use  Test  Trunks

 80   19                   0       0        0       0    19    19


 Command successfully completed
```

Summary report field descriptions

`Trk Grp Num`	The trunk group number which is being summarized. Only outgoing or two-way analog trunks will be listed.
`Num Of Trks`	The total number of members per trunk group.
`Last Test Date`	The date of the oldest measurement in the trunk group.
`Last Test Time`	The time of the oldest measurement in the trunk group.
`Trunks Passed Transm Test`	The number of trunks that have passed the trunk transmission tests.
`Trunks Failed Marginal Threshld`	The number of trunks that failed a marginal threshold, but not an unacceptable threshold according to the threshold values defined on the trunk group form.
`Trunks Failed Unaccept Threshld`	This is taken from the unacceptable threshold administered on the Trunk group form.
`Trks In-Use`	The number of trunks that were in-use at the time of testing.
`Trks Not Test`	The number of trunks that were not tested due to error conditions.
`Busied Out Trunks`	The number of trunks that were busied out at the time. This could be due to hardware problems, incorrect threshold values, etc.

mark port

This command marks faulty ports as defective to prevent their use in other administrative operations (for example, adding a data-module or station). Ports on any type of circuit pack may be marked except for installed circuit packs that are administered automatically (for example, Tone Detector, Tone Generator, Announcement, Speech Synthesizer, Call Classifier and Maintenance/Test circuit

packs). If the port can be administered manually, and it is unassigned, the port is marked as faulty. The **clear port** command reactivates the port. The **list marked-ports command** displays marked ports in list format. All marked port information is saved as part of translations.

Action/Object	Qualifier	Qualifier Description	Permissions	Defaults	Feature Interactions
mark port	***location***	Location of the port to be marked: **PCSSpp** Examples: **mark port 1c0208** **mark port 2a1001**	init inads craft	none	none

monitor bcms

This command displays output for agents and splits and summarizes the bcms condition. This on-line status report automatically updates every 30 seconds (or by pressing the UPDATE key) until the command is canceled by pressing the CANCEL key. Three display options are available: skill, split, and system.

Action/Object	Qualifier	Qualifier Description	Permissions	Defaults	Feature Interactions
monitor bcms	***split*** ***split number*** ***system*** ***system number*** ***skill*** ***skill number***		init inads craft cust rcust bcms browse	none	none

Qualifier Description

`split` Specifies that the command display status information for a specified split number (an ACD hunt group).

`split number` The split's identity to the switch and BCMS; an ACD hunt group number (split number). This parameter is entered only when the "split" parameter is entered.

`system` This specifies that the command display split queue status as well as cumulative split information for all the BCMS measured splits.

`system number` ACD hunt group numbers (split numbers) separated by spaces and/or split number ranges separated by a hyphen (-).

`skill` This specifies that the command display status information for a specified skill number.

`skill number` The skill's identity to the switch and BCMS; an ACD hunt group number (skill number). This parameter is entered only when the "skill" parameter is entered.

Output

The following examples shows the output from the **monitor bcms system** command.

```
monitor bcms system                          Page   1 of   1

                            BCMS SYSTEM STATUS

                         Date:   14:02 THU OCT 17 1991

                            AVG                    AVG                    AVG
           CALLS  OLDEST   ANSW  AVAIL   #     ABAND   #    AVG    AFTER
SPLIT       WAIT   CALL   SPEED  AGENT  ABAND   TIME   ACD   TALK   CALL
Service        3   1:03     :45    0      3      :30    20    2:30  1:25
Sales          5    :33     :15    0     11      :45    36    1:32   :35
```

Field descriptions

`Date:` The current date and time which is updated every 30 seconds or when the UPDATE key is pressed.

`SPLIT` The name of the split being reported, if no name is administered then the split extension is displayed in the form “EXTxxxxx”. Splits are displayed in split number order. This field is translation data.

`CALLS WAIT` The number of calls currently waiting in this split’s queue. If any of these calls are Direct Agent Calls, the field will be preceded by an asterisk. This field is real-time status data.

`OLDEST CALL` The amount of time that the oldest call has waited in queue. This field is real-time status data.

`AVG ANSW SPEED` The average speed of answer for this split during the current period. This includes time in queue and time ringing at the agent’s voice terminal. Calls that intraflow (calls that overflow from one ACD split to another split) will not have queue time from previous splits included in the average. The calculation is Total Answer Time/Total Automatic Call Distribution (ACD) Calls. This field is measurement data and includes only those calls that have completed (terminated).

`AVAIL AGENT` The number of agents in this split currently available to receive an Automatic Call Distribution (ACD) call from this split. This field is real-time status data.

`# ABAND` The number of calls that have abandoned during the current period. This field is measurement data.

`AVG ABAND TIME` The average time abandoned calls waited in queue before abandoning during the current period. The calculation is Total Abandon Time/Total Calls Abandoned. This field is measurement data and includes only those calls that have completed (terminated).

`# ACD` The number of Automatic Call Distribution (ACD) calls handled by this split during the current period. This includes calls that intraflow into the split. This field is measurement data.

`AVG TALK` The average talk time for Automatic Call Distribution (ACD) calls handled by this split during the current period. This does not include ring time at the agents' voice terminal. The calculation is Total ACD Talk Time/Number of ACD Calls. This field is measurement data and includes only those calls that have completed (terminated).

`AVG AFTER CALL` The average After Call Work (ACW) time for Automatic Call Distribution (ACD) calls handled by this split during the current period. ACD calls with no ACW time are included in the average. Time spent on direct incoming or outgoing calls while in ACW will not be included in the average. The calculation is (Total ACW Time - Total ACW Incoming Time - Total ACW Outgoing Time)/Total ACD Calls. This field is measurement data and includes only those calls that have completed (terminated).

The following example shows the output from the **monitor bcms split 1** command.

```
monitor bcms split 1                    Page   1 of   1   SPE A


            BCMS SPLIT (AGENT) STATUS

     Split: 1
    Split Name: hunt group 1          Date:   9:02 TUE OCT 22 1991
 Calls Waiting:  0
   Oldest Call: 0:00
   0=Staffed   0=Avail   0=ACD   0=ACW   0=AUX   0=Extn    0=OtherSplit
 AGENT        EXT    STATE    TIME     ACD   EXTN IN  EXTN OUT
                                       CALLS   CALLS     CALLS
```

Field descriptions

`Split:` The number of the split requested. This field is translation data.

`Split Name:` The name of the split requested. If no name exists the split extension is displayed in the form "EXT xxxxx". This field is translation data.

`Date:`	The current date and time which is updated every 30 seconds or when the UPDATE key is pressed.
`Calls Waiting:`	The number of calls currently waiting in this split's queue. If any of these calls are Direct Agent Calls, the field will be preceded by an asterisk. This field is real-time status data.
`Oldest Call:`	The time in minutes:seconds that the current oldest call has waited in this split's queue. This field is real-time status data.
`Staffed`	The number of agents currently logged into this split. This field is real-time status data.
`Avail`	The number of agents currently available to receive an Automatic Call Distribution (ACD) call in this split. Agents are in either the Auto-in or Manual-in work modes and are not currently on a call. If the agent is on another split's call or in After Call Work (ACW) for another split, this agent is not considered available and will not be recorded here. This field is real-time status data.
`ACD`	The number of agents in this split currently on an Automatic Call Distribution (ACD) call for this split. This includes ACD calls that are being handled by this split that arrive as coverage from another split. This field also includes outbound calls (Outgoing Call Manager) that are distributed through the ACD. Note that if an agent puts an ACD call on hold, but does not enter another state (for example, the agent does not enter the AVAIL state), the agent will still be seen as in the ACD state. This field is real-time status data.
`ACW`	The number of agents in this split currently in After Call Work (ACW) for this split. This field is real-time status data.
`AUX`	The number of agents in this split currently in AUX work for this split. If an agent is on another split's call or in After Call Work (ACW) for another split, this agent is not considered in AUX work and will not be recorded here. This field is real-time status data.
`Extn`	The number of agents in this split currently on non-ACD (Automatic Call Distribution) calls, either incoming or outgoing directly to or from their extensions. If the agents are also in After Call Work (ACW) or AUX they will be recorded as Extn rather than ACW or AUX. This field is real-time status data.
`Other Split`	The number of agents in this split on another split's call or in After Call Work (ACW) for another split. Only used if agents belong to multiple splits. This field is real-time status data.
`AGENT`	The name of the agent associated with the extension. If no name exists this field will be left blank. This field is translation data.
`EXT`	The extension of the agent. This field is translation data.

STATE	The current state of the agent for this split. This possible states are Avail, ACD, ACW, AUX, Extn In, Extn Out, OtherSplit, and Unstaff. If an agent is staffed, the agent must also be in one of the above states. This field is real-time status data.
TIME	The clock time that the agent entered the current state in hours:minutes. This field is real-time status data.
ACD CALLS	The number of Automatic Call Distribution (ACD) calls (inbound and outbound), that the agent has completed for this split during the current period (half hour or hour). The maximum number of calls is 255, and if this maximum is exceeded, 255 is displayed. This field is measurement data.
EXTN IN CALLS	The number of non-ACD (Automatic Call Distribution) calls that the agent has received (incoming) and completed during the current period. The maximum number of calls is 255, and if this maximum is exceeded, 255 is displayed. This field is measurement data.
EXTN OUT CALLS	The number of non-ACD (Automatic Call Distribution) calls that the agent has made (outgoing) and completed during the current period. The maximum number of calls is 255, and if this maximum is exceeded, 255 is displayed. This field is measurement data.

monitor health

This command displays the current system alarm summary, maintenance busy summary, user summary, critical system status, and cabinet status, that are updated every minute.

After this command is terminates, users are logged off.

Action/Object	Qualifier	Qualifier Description	Permissions	Defaults	Feature Interactions
monitor health			init inads craft cust nms browse	none	If standby SPE Emergency Transfer Select Switches change and handshakes are down, the displayed Emerg Trans field is incorrect until handshake reintializes. When the **monitor health** command terminates, users are logged off of the system.

Output

The following example is a display of the **monitor system health** command.

```
status health

 ALARM SUMMARY                    CABINET STATUS
      Major:  0
      Minor:  9                 Emerg  Alarms
    Warning:  4             Cab Trans Mj Mn Wn PNC
                             1   off   0| 7| 0 up
 BUSY-OUT SUMMARY            2   off   0| 0| 4 up
     Trunks:  0              3   n.a.  0| 2| 0 up
   Stations:  0              4   off   0| 0| 0 up/up
     Others:  0
 PROCESSOR OCCUPANCY STATUS
 Static:   3%     SM:   6%
     CP:  10%   Idle:  81%
 CRITICAL SYSTEM STATUS
   Active SPE: A/auto
   Duplicated? SPE:n
    SPE Power: commercial
  Time Source: external                   9:33 TUE JAN 29 1991
     # Logins: 2       - Press CANCEL to quit -
```

Field descriptions

`Major`	The number of logged major alarms (0 – 200).
`Minor`	The number of logged minor alarms (0 – 200).
`Warning`	Number of warnings logged in the alarm file (0 – 200).
`Trunks`	Number of busied out maintenance trunks.
`Stations`	Number of busied out maintenance stations.
`Others`	Combined number of busied out maintenance objects excluding trunks and stations.
`Static`	Proportion of the CPU currently dedicated to high priority items. This percentage is rounded to the nearest integer, therefore 0 percent means that the occupancy is less than one half of a percent.
`SM`	Proportion of the CPU currently dedicated to system management or periodic and scheduled maintenance. If large amounts of periodic or scheduled maintenance testing performs, this occupancy percentage can be high without affecting service. This percentage is rounded to the nearest integer, therefore 0 percent means that the occupancy is less than one half of a percent.

CP	Proportion of the CPU currently dedicated to call processing. This occupancy has priority over SM and IDLE occupancy categories and takes processor time away from these occupancy categories, if needed. This percentage is rounded to the nearest integer, therefore 0 percent means that the occupancy is less than one half of a percent.
Idle	Proportion of the CPU currently available. This percentage is rounded to the nearest integer, therefore 0 percent means that the occupancy is less than one half of a percent.
Active SPE	Currently-active processor complex. When the active processor complex is locked on-line with lock switching on DUPINT, the “lock” option displays; otherwise, “auto” displays.
Duplicated?	Duplication status of the SPE (n).
SPE Power	Current power source for the processor complex. The normal state is “commercial”. When commercial power is unavailable, in-use battery backup is indicated with “backup”.
Time Source	Current timing source is displayed. The display values for this field vary according to timing sources selected. If the site administers the optional Stratum-3 hardware, “external” displays and “internal” displays when an internal source, such as a tone clock, is used. Primary and secondary timing sources must be administered when using the Stratum-4 option. “primary” = primary administered source is in use “secondary” = secondary administered source is in use. “local” = neither the primary or secondary sources are in use.
# Logins	Number of current users.
Cab	Assigned cabinet number, ranging from 1 to the highest cabinet number in the system.
Emerg Trans	Current setting of the emergency transfer switch for each cabinet. Five options are available: auto-on (“auto+” or “a+”), auto-off (“auto-” or “a-*, “on”, “off”, and “n.a.”. If “auto+” or “auto-” option are enabled, emergency transfers automatically activate when cabinets fail (“+” indicates that emergency transfer is activated, while “-” indicates that emergency transfer is inactive). When “on” is displayed, emergency transfer automatically activates. The “off” option shows that cabinets cannot activate emergency transfers. In duplicated SPE systems, switch settings for both processors of the PPN (cabinet 1) display. In this case, “auto+” is abbreviated “a+”, “auto-” is d “a-”, and “off” is “of”. “on” does not changed. If “n.a.” displays, emergency transfer switch settings are not available.
Mj	Number of major alarms associated with the cabinet. An asterisk fills the field when the number exceeds 99.
Mn	Number of minor alarms associated with the cabinet. An asterisk fills the field when the number exceeds 99.

`Wn` Number of Wn associated with the cabinet. An asterisk fills the field when the number exceeds 99.

`PNC` Displays current Port Network Connectivity (PNC) status for each port network within a cabinet. When multiple port networks exist within a cabinet, a slash separates Carriers A, B, and C (listed first) from Carriers D and E (up/up). Availability of the Expansion Archangel Link (EAL) determines the PNC status of a port network. “Up” denotes EAL availability. When the EAL is not available, then “dn” (down) displays.

`Time of Day` Displays current time of day acquired from the system.

monitor security-violations

This command displays information about failed attempts to access the system, including the time of the violation, the login entered, and the port accessed during the failed login attempt. The system logs trunk group numbers, members, and extensions for remote access violations. The system logs remote and local invalid access attempts with a total of 16 entries maintained for each access type. This online status report automatically updates every 30 seconds until the command is canceled by pressing the CANCEL key.

Action/Object	Qualifier	Qualifier Description	Permissions	Defaults	Feature Interactions
monitor security-violations	***print***	Reports print to SAT-linked printers.	init inads craft cust rcust bcms browse	none	none

Output

The following example shows the output from the **monitor security-violations** command.

```
monitor security-violations                          SPE A

                     SECURITY VIOLATIONS STATUS

                        Date:   9:12 MON DEC 30 1991

   SYSTEM MANAGEMENT VIOLATIONS        REMOTE ACCESS VIOLATIONS

 Date   Time  Login  Port    Ext    Date   Time   TG No.   Mbr  Ext
 12/30  09:12 init   MGR1           12/30  12:42  80        1   1111
 12/30  09:12 init   MGR1
 12/30  09:12 init   MGR1
```

Field descriptions

Date:	Current date and time.
Date	Date of the logged security violation shown as MM/DD (where MM = month and DD = day).
Time	Time of the logged security violation shown as HH:MM (where HH = the hour and MM = minute of the invalid access attempt).
Login	Login ID entered for the login violation attempt.
Port	Type of port used when login violation occurred. The following is a table of valid port types:
MGR1	MGR1 represents a connection to a system SAT port. Connections are either hardwired or dialed-up.
Ext	Extension assigned to the data module that failed during “logging in” session. If a data module is not used, this field is blank.
Date	Date of the logged security violation shown as MM/DD (where MM = month and DD = day).
Time	The time of the logged security violation shown as HH:MM (where HH = the hour and MM = the minute).
TG No.	The trunk group number associated with the trunk from the failed remote access attempt (remote access violations only).
Mbr	The trunk group member number associated with the trunk from the failed remote access attempt (remote access violations only).
Ext	Extension that interfaces with remote access features (remote access violations only).

monitor system

This command summarize the system’s condition. This on-line status report automatically updates every minute (or by pressing the UPDATE key) until the command is canceled by pressing the CANCEL key. For security reasons, the cancel command automatically logs off technicians.

Overall system status is available with either view option. “View1” displays attendant, maintenance, and traffic status. Attendant and maintenance status update every minute and traffic status updates hourly. “View2” displays all “View1” items, except hunt group measurements that are omitted from traffic status portions. These screens contain simplified high-level information about the system’s health. The **monitor system conn** command displays connection’s status in the connection manager process. Data is collected frequently in the connection manager for key information items used to create this report.

Action/Object	Qualifier	Qualifier Description	Permissions	Defaults	Feature Interactions
monitor system	***view 1*** ***view 2*** ***conn*** ***pnn ###*** ***pnn ###*** ***pnn ###***	see below	init inads craft cust nms browse	none	none

Qualifier Description

view1 This screen displays attendant status, maintenance status, last hour's measurement of trunk groups, hunt groups, attendant groups, and the time of day.

view2 This screen displays a subset of view1 form entries. It includes view1 forms except the last hour's hunt group measurements.

conn This option displays the connection monitor output for key information.

entering no options Omitting "pnn # # #" arguments on the command line displays the default configuration of Pnn's 1, 2 and 3.

pnn # # # Entering "pnn # # #" (where a pnn number from 1 to 3 replaces "#", and displays data for specified pnns.

entering no options Omitting the "pnn # # #" argument on the command line displays default configurations of Pnn's 1, 2 and 3.

pnn # # # Entering "pnn # # #", where "#" is replaced by a pnn number from 1 to 3, displays data for specified pnns.

Output

Below are displays of **monitor system view 1** and **monitor system view 2**.

```
monitor system view1
                 ATTENDANT STATUS                  MAINTENANCE STATUS

                   Console no.                      # of alarms for trunks: 4
  Activated: 1 2 3 4 5 6                          # of alarms for stations: 2
                                                  # of alarms for other res: 1
Deactivated: 7 8                        First OSS number has been informed? n


                               TRAFFIC STATUS
                             Measurement Hour: 1800
            Trunk Group Measurement               Hunt groups Measurement
(4 grps with highest %time ATB)          (4 grps with highest # of qued calls)
    Grp no: 78                                   Grp no: 16
   Grp dir:                                   Calls qued: 2
Calls qued: 1                                 Calls aban: 1
 %Out blkg:                                         Attendant Group Measurement
 %Time ATB:                                   Calls qued: 1     Calls aban: 0

                                                      16:06 WED MAR 6 1996
                 - press CANCEL to quit -
```

```
monitor system view2
                 ATTENDANT STATUS                  MAINTENANCE STATUS

                   Console no.                      # of alarms for trunks: 4
  Activated: 1 2 3 4 5 6                          # of alarms for stations: 2
                                                  # of alarms for other res: 1
Deactivated: 7 8                        First OSS number has been informed? n


TRAFFIC STATUS  Measurement Hour: 1800
          Trunk Group Measurement
(4 grps with highest %time ATB)
    Grp no: 78
   Grp dir:
Calls qued: 1
 %Out blkg:
 %Time ATB:
          Attendant Group Measurement
Calls qued: 1     Calls aban: 0
                                                      16:08 WED MAR 6 1996
                 - press CANCEL to quit -
```

Field descriptions

`Console #` A list of console numbers that are activated or deactivated.

`Activated:` The attendant console is active. An attendant console activated if:

- its handset/headset is plugged in
- it is not busied out, and the system is in day service and the console is a day or day/night or principle console, or the system is in night service and the console is a night or day/night console.

`Deactivated:` The attendant console is inactive. The attendant console deactivated if it does not meet activated conditions.

`# of alarms for trunks` The number of existing minor and major trunk port alarms.

`# of alarms for other resources` The number of existing minor and major alarms on all maintainable objects in the system, except trunks and stations.

`First OSS number has been informed?` Questions if the first OSS telephone number reports and acknowledges alarms. If “Alarm Origination” is disabled or there are no active alarm, the field is “n”.

`Measurement Hour` The starting time for taking measurements. For example, if the measurement hour is shown as 1800, traffic status data display is the time period from 6 PM to 7 PM (The measurement is taken hourly).

`Grp no` A number between 1 and the maximum trunk or hunt group number.

`Grp dir` Group direction: incoming, outgoing or two way.

`Calls qued` Total calls that arrive and are placed in the trunk group queue.

`Calls aban` Total abandoned calls by the caller.

`%Out blkg:` The ratio of outgoing calls that are not carried (due to overload conditions) on a trunk group to outgoing calls offered.

`% Time ATB:` The percentage of time within polling intervals that all trunks in the trunk group are unavailable for use.

`Time of day` The current time of day acquired from the system.

The following example is a display of the **monitor system conn** command.

```
        Time Slot Status                  Bus Status
  Pnn     Bus   State  *Idle Count   Pnn  Bus  State
   10       0   Maint     0           10    0  Avail
   10       1   Normal    233         10    1  Avail
   10       0   Maint     0           22    0  Avail
   10       1   Normal    233         22    1  Avail
   22       0   Maint     0            1    0  Avail
   22       1   Normal    233          1    1  Avail
   22       0   Maint     0
   22       1   Normal    233        *Callrate:  20
    1       0   Maint     0          *Interval:  60
    1       1   Normal    233      *Max_callrate:45
    1       0   Maint     0         *Next_hour:  70
    1       1   Normal    233
  tot_ts_req :0F24 0000 3CE2 ts_count :0010 0920 0200 Requests-TN748 TTRs :0014
  ts_denied  :0E46 3CE2 0000 ts_total :0000 0090 0028 Requests-TN748 CPTRs:0041
  tot_fts_req:0000 53D2 2231 fts_count:02E0 0910 0784 Requests-TN744 CPTRs:0082
                             fts_total:0320 0192 7048 Requests-TN744 TTRs :0082
                             Requests-TN744 MFCs :0082
  Note: * Denotes Base 10, All Other Figures are in Base 16
```

Field descriptions

`Time Slot Status` — 4 numbers are associated with time slot status for each specified pnn; the two buses (0 and 1) have a maintenance and a normal state, and a number of idle counts. These fields represent real-time status data.

`Bus Status` — Two numbers are associated with the two buses for each pnn. Shown are the pnn number; the associated bus (0 or 1); and the bus's state (avail or unavail). These fields represent real-time status data.

`Callrate` — The callrate field represents call rates currently executing on the switch. This is a counter that is bumped for each call attempt. This field represents real-time status data.

`Interval` — This field represents the interval applied to the call rate. It is normally a 36 second time period. This field represents constant status data.

`Max_callrate` — This field represents the maximum call rate achieved since the last hour. If, at 20 minutes past 12:00, the system executes this command, the maximum call rate obtained during the past 20 minutes displays. This field represents real-time status data.

`Next_hour` — This field contains a value of 0 or 1 depending related to measurements taken this hour or the next. This hour reflects maximum call rates. When this flag is set, statistics accumulate for the next hour and shortly thereafter.

`tot_ts_req` This field holds the total time slots in use during the time period elapsed since the top of the last hour. Data is internally collected every 100 seconds. When the timer fires and the data collection occurs, a check is made as to how many time slots are currently in use. That's where the total comes from. There are three numbers displayed for this field on the form; one for each of the pnns requested. This field represents real-time status data.

`ts_denied` This field records total time slots requests denied since the beginning of the last hour. Data is collected internally every 100 seconds. Three numbers display for this field; one for each requested pnn. This field represents real-time status data.

`tot_fts_req` This field represents the total number of requested fiber time slots. This field increments each time a fiber time slots is allocated since the last top of the hour measurement polling. Three values display; one for each requested pnn. This field represents real-time status data.

`ts_count` The value in this field represents the requests for time slots during the last 100 second interim. An internal timer initiates polling every 100 seconds. Three numbers display for this field on the form; one for each requested pnn. This field represents real-time status data.

`ts_total` This field represents the total number of time slots requested since the top of the last hour. This field represents real-time status data.

`fts_count` The value in this field represents the requests for fiber time slots during the last 100 second interim. An internal timer initiates polling every 100 seconds. Three numbers display for this field; one for each requested pnn. This field represents real-time status data.

`fts_total` This field indicates the total number of fiber time slots during the last 100 second interim. This field represents real-time status data.

`Requests-TN748 TTRs` This field reflects the total number of requested touch tone receivers that are currently-active. It decrements when tone receivers are freed and increments when they are requested. This field applies strictly to the TN748 board. This field represents real-time status data.

`Requests-TN748 CPTRs` This field reflects the total number of requested call progress tone receivers that are currently active. It decrements when call progress tone receivers are freed and increments when they are requested. This field applies strictly to the TN748 board. This field represents real-time status data.

`Requests-TN744 CPTRs` This field reflects the total number of requested call progress tone receivers that are currently active. It decrements when call progress tone receivers are freed and increments when they are requested. This field applies strictly to the TN744 board. This field represents real-time status data.

`Requests-TN744 TTRs` This field reflects the total number of requested touch tone receivers that are currently active. It decrements when tone receivers are freed and increments when they are requested. This field applies strictly to the TN744 board. This field represents real-time status data.

`Requests-TN744 MFC` This field reflects the total number of requested multi-frequency receivers that are currently active. It decrements when multi-frequency receivers are freed and increments when they are requested. Note that this field applies strictly to the TN744 board. This field represents real-time status data.

monitor traffic

This command provides information on the number of trunk group and hunt group calls waiting to be serviced, and the time the oldest call in the group has been waiting for service.

Action/Object	Qualifier	Qualifier Description	Permissions	Defaults	Feature Interactions
monitor traffic	***trunk-groups*** ***hunt-groups***	see below	init inads craft cust rcust bcms browse	none	none

Qualifier Description

trunk-groups The number of trunk group calls waiting to be serviced, members in the group, and number of members that are active on calls in the group. This field displays up to 60 administered trunk groups. Technicians specify the starting trunk group. If technicians enter 5, the displayed trunks start at 5. Numbers 1-4 do not appear.

hunt-groups This field displays the waiting time for oldest call in each hunt group. Screen data updates every minute; only changed fields refresh. Unadministered hunt groups have blank values.

Output

The following output example is a display of the **monitor traffic hunt-groups** command.

```
monitor traffic hunt-groups

                 HUNT GROUP STATUS   22:49 SAT DEC 31 1988
      #   S   A   Q   W   LCIQ       #   S  A   Q   W  LCIQ
      1   15  10  10  0   20         17
      2                              18
      3                              19
      4                              20
      5                              21
      6                              22
      7                              23
      8                              24  10   5   0   0   10
      9                              25
      10                             26
      11                             27
      12                             28
      13                             29
      14                             30
      15                             31
      16                             32

 (#: Group;  S: Grp Size;  A: Active Members;  Q: Q Length;  W: Calls Waiting)

 (LCIQ: Longest Call In Queue in seconds)
```

Field descriptions

`#` Group number for trunk group or hunt group.

`S` Number of members administered for each trunk or hunt group.

`A` Number of group members that are active on a call. This does not include busied out members.

`Q` The length of queues administered for groups.

`W` Number of calls waiting in group queues to be serviced.

`LCIQ` The longest call in queue (LCIQ) indicates the time in seconds the oldest call in the hunt group queue has been waiting to be serviced.

The following output example is a display of the **monitor traffic trunk-groups** command.

```
monitor traffic trunk-groups

                 TRUNK GROUP STATUS   22:49 SAT DEC 311988
   #  S  A  Q  W  #  S  A  Q  W  #  S  A  Q  W  #  S  A  Q  W
   1  15 10 0  0
   2  22 21 10 10
   9  31 12 20 0
   65 5  5  10 8
   99 12 0  0  0

 (#: Group;  S: Grp Size;  A: Active Members;  Q: Q Length;  W: Calls Waiting)
```

monitor trunk

This command displays internal software status information. This command helps to locate facilities to which the trunk is communicating. If a trunk group number is entered without a member number, and with or without “/”, it is member 1. If a trunk group and member number are both entered, status for specified members displays.

Action/Object	Qualifier	Qualifier Description	Permissions	Defaults	Feature Interactions
monitor trunk	***group***	1 – 99. If a group number is entered without a member number, the member number defaults to 1.	init inads craft cust rcus bcms browse	1 (one)	none
	member	1 – 99. If a member number is entered, the member status displays.			

Output

The following example shows the output from the **monitor trunk 78/1** command.

```
monitor trunk 78/1

                              TRUNK STATUS

 Trunk Group/Member: 078/001            Service State: in-service/idle
               Port: 01C1505         Maintenance Busy? no
 Signaling Group ID:                      CA-TSC State:
    Connected Ports:
```

Field descriptions

`Trunk Group/Member`	Trunk group and group member number. (1-99/1-99).
`Port`	The port location (cabinet-carrier-slot-circuit) for trunks.
`Signaling Group ID`	If the trunk is ISDN, this field contains the number of the ISDN Signaling Group. Otherwise, this field is blank. ( )
`Connected Ports`	Port locations (cabinet-carrier-slot-circuit) connected to the trunk.
`Service State`	In-service/active, in-service/idle, out-of-service, out-of-service-NE (Near End), out-of-service-FE (Far End), maint-NE/active, maint-FE/active, maint-NE/idle, maint-FE/idle, pending-in-service, pending-maint, or disconnected. NE (Near End) and FE (Far End) refer to the “end” of the trunk that has placed the facility in its current state.
`Maintenance Busy`	This field identifies maintenance testing that occurs on the trunk.
`CA-TSC State`	The state of temporary signaling connections. (connection set up to pass call information over PRI signaling links).

recycle carrier

This command recycles power for specified carriers. When power units are replaced in carriers, this command recycles that carrier’s power. **No Compact Modular Cabinet (CMC) can be recycled.**

release access-endpoint

This command removes all ports associated with the specified access endpoint from a maintenance busy state. Periodic and scheduled tests subsequently resume on the released ports. Maintenance completes background initialization testing on the released ports. For details of the test sequence, refer to [3].

Action/Object	Qualifier	Qualifier Description	Permissions	Defaults	Feature Interactions
release access-endpoint	***extension***	number associated with desired access endpoint.	init inads craft nms	none	none

Output

The following example shows the output from the **release access-endpoint 22502** command and assume that the access endpoint ports for extension 22502 are in cabinet 1, carrier C, slot 11, circuit 1 to 6.

```
release access-endpoint 22502          page 1 of 1

                     COMMAND RESULTS

 Port  Maintenance Name Alt. Name  Result   Error Code
 01C1101  WAE-PORT    22502    PASS
 01C1102  WAE-PORT    22502    PASS
 01C1103  WAE-PORT    22502    PASS
 01C1104  WAE-PORT    22502    PASS
 01C1105  WAE-PORT    22502    PASS
 01C1106  WAE-PORT    22502    PASS

Command Successfully Completed
```

Field descriptions

`Port`	Port address (cabinet-carrier-slot-circuit) of released maintenance.
`Maintenance Name`	The type of released maintenance object. (wideband access point =WAE-PORT, single port access endpoint = TIE-DS1.
`Alt. Name`	Alternate way to identify maintenance objects. This field contains the extension number of the access endpoint.
`Result`	Success status of a busied out object (PASS, ABORT, FAIL)
`Error Code`	System-generated description of a command failure.

release board

This command activates administered maintenance objects on the circuit pack at specified locations.

Action/Object	Qualifier	Qualifier Description	Permissions	Defaults	Feature Interactions
release board	***location***	Board location: **PCSS**	init inads craft nms	none	none

Output

The following output example is a display of the **release board 1c07** command and assumes that the board in cabinet 1, carrier c, slot 7 is an analog board with three administered ports.

```
release board 01C07

                    COMMAND RESULTS

Port   Maintenance Name  Alt. Name  Result  Error Code
01C07     ANL-BD                    PASS
01C0702   ANL-LINE                  PASS
01C0701   ANL-LINE        51001     PASS
01C0703   ANL-LINE                  PASS

Command successfully completed
```

Field descriptions

`Port` Port address (cabinet-carrier-slot) of released maintenance object.

`Maintenance Name` The type of maintenance object that is being released.

`Alt. Name` Alternate way to identify maintenance objects.

If the Object is	The field contains
station	extension
trunk	*xxx/yyy* (where *xxx* = trunk group number and *yyy* = member number)
private CO line	*P/xxx* (where *xxx* = private CO line group number)

`Result` Success status of a busied out object (PASS, ABORT, FAIL)

`Error Code` System-generated description of a command failure.

release cdr-link

This command removes maintenance objects associated with specified call detail recording (cdr)-links from a maintenance busy state. These links provide asynchronous data connections from switches to peripherals; they are composed of a:

- Far end data module
- Simulated data channel on a PKTINT board
- Manager that initiates and maintains the link
- Controller/protocol that services the link

For information on what a CDR link is and does, see the description of the "status cdr-link" command.

Action/Object	Qualifier	Qualifier Description	Permissions	Defaults	Feature Interactions
release cdr-link	***link-id***	primary secondary	init inads craft	none	none

Output

The following example shows the output from the **release cdr-link primary** command.

```
release cdr-link primary

                    COMMAND RESULTS

 Port  Maintenance Name  Alt. Name  Result   Error Code
          PRI-CDR                    PASS

Command successfully completed
```

Field descriptions

`Port`	Not applicable. ( )
`Maintenance Name`	Type of released maintenance object. (primary cdr-link = PRI-CDR, secondary cdr-link = SEC-CDR)
`Alt. Name`	Not applicable. ( )
`Result`	Success status of a busied out object (PASS, ABORT, FAIL)
`Error Code`	System-generated description of a command failure.

release data-module

This command activates the specified data module (or data channel). Hardware tests are executed to verify that the equipment is functioning.

Action/Object	Qualifier	Qualifier Description	Permissions	Defaults	Feature Interactions
release data-module	***extension***	Extension number associated with desired data module or data channel.	init inads craft cust nms	none	none

Output

The following example shows the output from the **release data-module 300** command.

```
release data-module 310

                          COMMAND RESULTS

Port    Maintenance Name  Alt. Name    Result    Error Code
01C1103     DIG-LINE                   PASS

Command successfully completed
```

Field descriptions

`Port` Port address (cabinet-carrier-slot-circuit) of the maintenance object that is busied out or released, or the number of the data channel.

`Maintenance Name` The type of maintenance object that is being busied out or released.

`Alt. Name` Alternate way to identify maintenance objects.

If the Object is	The field contains
station	extension
trunk	*xxx/yyy* (where *xxx* = trunk group number and *yyy* = member number)
private CO line	*P/xxx* (where *xxx* = private CO line group number)

`Result` Test result: Pass, Abort, Fail

`Error Code` System-generated description of a command failure.

release journal-printer

This command activates maintenance objects associated with a specified pms-log or wakeup-log link. Hardware tests are executed to verify that the equipment is functioning. For general information on journal printer links, see the description of the "busyout pms-link" command. For information on journal printers, see the description of the "status journal-link" command.

Action/Object	Qualifier	Qualifier Description	Permissions	Defaults	Feature Interactions
release journal-printer	***pms-log***	releases links to pms printers. (1)	init inads craft nms	none	see below
	wakeup-log	Releases links to wakeup logging facilities. (0)			

Feature Interactions

Specific component maintenance performed on a link sometimes conflicts with link maintenance, itself (busied out objects create link setup failure). Frequent link re-setup attempts may delay faulty component recovery. For best results, technicians should use busyout to disable attempted link re-setup.

Output

The following example shows the output from the **release journal-printer wakeup-log** command.

```
release journal-printer wakeup-log

                          COMMAND RESULTS

Port   Maintenance Name   Alt. Name   Result   Error Code
 0         JRNL-LINK                  PASS

Command successfully completed
```

Field descriptions

Port	Port address (cabinet-carrier-slot-circuit) of busied out or released maintenance object. (wakeup log = 0; pms log = 1)
Maintenance Name	Type of busied out or released maintenance object.
Alt. Name	Not applicable.
Result	Test result: Pass, Abort, or Fail.
Error Code	System-generated description of a command failure.

release link

This command activates MOs associated with a specified link. Hardware tests verify that equipment is functioning properly.

Action/Object	Qualifier	Qualifier Description	Permissions	Defaults	Feature Interactions
release link	***link-id***	Number associated with each link (1–8). 1through 4 reside on Processor Interface circuit packs “1a1” or “1b1” 5 through 8 reside on Processor Interface circuit pack “1a2” or “1b2.”	init inads craft	none	none

Output

The following example shows the output from the **release link 1** command.

```
release link 1

                         COMMAND RESULTS

Port   Maintenance Name  Alt. Name  Result  Error Code
01C0301    PI-LINK                  PASS

Command successfully completed
```

Field descriptions

Port	Port address (cabinet-carrier-slot-circuit) of the busied out or released maintenance object. Port address represents the link-id.
Maintenance Name	The type of maintenance object that is being released.
Alt. Name	Not applicable.
Result	Success status of a busied out object (PASS, ABORT, FAIL)
Error Code	System-generated description of a command failure.

release mis

This command activates management information systems. Hardware tests are executed to verify that equipment is functioning properly.

Action/Object	Qualifier	Qualifier Description	Permissions	Defaults	Feature Interactions
release mis			init inads craft cust rcust	none	none

Output

The following example shows the output from the **release mis** command.

```
release mis

                        COMMAND RESULTS

Port   Maintenance Name   Alt. Name   Result   Error Code
               MIS                   PASS

Command Successfully Completed
```

Field descriptions

Port	Not applicable.
Maintenance Name	MIS
Alt. Name	Not applicable.
Result	Success status of a busied out object (PASS, ABORT, FAIL)
Error Code	System-generated description of a command failure.

release modem-pool

This command deactivates specified modem pool groups or group members. Specifying group numbers, member numbers releases single group members. Specifying modem pool group numbers releases members in a modem pool group.

Action/Object	Qualifier	Qualifier Description	Permissions	Defaults	Feature Interactions
release modem-pool	***group***	1-5.	init inads craft	none	none
	member	pair of analog and digital line ports (or two pair for the Integrated modem-pool case). 1-32.			

Output

The following example shows the output from the **release modem-pool 1** command.

```
release modem-pool 1              SPE B

                        COMMAND RESULTS

Port      Maintenance Name   Alt. Name  Result   Error Code

01C0701      MODEM-PT                   PASS
01C0703      MODEM-PT                   PASS

Command successfully completed
```

Field descriptions

Port	Port address (cabinet-carrier-slot-circuit) of busied out maintenance object.
Maintenance Name	MODEM-PT.
Alt. Name	This field is not applicable to this command.
Result	Success status of a busied out object (PASS, ABORT, FAIL)
Error Code	System-generated description of a command failure.

release pms-link

This command deactivates MOs that are associated with a property management system link. These links provide asynchronous data connections from switches to peripherals; they are composed of a:

- Far end data module
- Simulated data channel on a NETCON board
- Manager that initiates and maintains the link
- Controller/protocol that services the link

Action/Object	Qualifier	Qualifier Description	Permissions	Defaults	Feature Interactions
release pms-link			init inads craft	none	see below

Feature Interactions

Specific component maintenance performed on a link sometimes conflicts with link maintenance, itself (busied out objects create link setup failure). Frequent link re-setup attempts may delay faulty component recovery. For best results, technicians should use busyout to disable attempted link re-setup.

Output

The following example shows the output from the **release pms-link** command.

```
release pms-link

                        COMMAND RESULTS

Port   Maintenance Name    Alt. Name   Result    Error Code
          PMS-LINK                     PASS

Command Successfully Completed
```

Field descriptions

Port	This field is left blank.
Maintenance Name	PMS-LINK
Alt. Name	Not applicable.
Result	Success status of a busied out object (PASS, ABORT, FAIL)
Error Code	System-generated description of a command failure.

release port

This command deactivates specified ports on circuit packs.

Action/Object	Qualifier	Qualifier Description	Permissions	Defaults	Feature Interactions
release port	***location***	Physical location of the port: **PCSS**	init inads craft	none	none

Output

The following example shows the output from the **release port 1c0701** command and assumes that the port in cabinet 1, carrier c, slot 7, circuit 1 is an analog port.

```
release port 01C0701

                          COMMAND RESULTS

   Port   Maintenance Name   Alt. Name   Result   Error Code
 01C0701     ANL-LINE                    PASS

Command successfully completed
```

Field descriptions

`Port` Port address (cabinet-carrier-slot-circuit)

`Maintenance Name` The type of maintenance object that is being released.

`Alt. Name` Alternate way to identify maintenance objects.

If the Object is	The field contains
station	extension
trunk	*xxx/yyy* (where *xxx* = trunk group number and *yyy* = member number)
private CO line	*P/xxx* (where *xxx* = private CO line group number)

`Result` Success status of a busied out object (PASS, ABORT, FAIL)

`Error Code` System-generated description of a command failure.

release pri-endpoint

This command removes PRI endpoint ports (B-channels) associated with specified PRI endpoint from maintenance busy states. Periodic and scheduled tests resume on released ports. The switch attempts to negotiate with the far-end PRI terminal adapter activating PRI endpoint port (B-channel). Maintenance does background initialization testing on released ports. For details of the test sequence, refer to [3].

Action/Object	Qualifier	Qualifier Description	Permissions	Defaults	Feature Interactions
release pri-endpoint	***extension***	extension number associated with desired PRI endpoint.	init inads craft nms	none	none

Output

The following example shows the output from the **release pri-endpoint 22501** command and assumes that the PRI endpoint ports for extension 22501 are in cabinet 1, carrier B, slot 20, circuit 1 to 6.

```
release pri-endpoint 22501            page 1 of 1

                          COMMAND RESULTS

 Port      Maintenance Name Alt. Name  Result   Error Code
 01B2001        PE-BCHL       22501     PASS
 01B2002        PE-BCHL       22501     PASS
 01B2003        PE-BCHL       22501     PASS
 01B2004        PE-BCHL       22501     PASS
 01B2005        PE-BCHL       22501     PASS
 01B2006        PE-BCHL       22501     PASS

Command Successfully Completed
```

Field descriptions

Port	Port address (cabinet-carrier-slot-circuit) of released maintenance object.
Maintenance Name	PE-BCHL.
Alt. Name	Alternate way to identify maintenance objects. (PRI endpoint extension)
Result	Success status of a busied out object (PASS, ABORT, FAIL)
Error Code	System-generated description of a command failure.

release sp-link

This command reactivates busied out system printer links and resolves active alarms for system printer links. The system printer link is a link from the switch to an external printer. Adminstering system printer extensions to call system printers creates the links.

Action/Object	Qualifier	Qualifier Description	Permissions	Defaults	Feature Interactions
release sp-link			init inads craft	none	none

Output

The following example shows the output from the **release sp-link** command.

```
release sp-link                SPE A

                        COMMAND RESULTS

Port    Maintenance Name    Alt. Name    Result    Error Code
            SYS-PRNT                      PASS

Command Successfully Completed
```

Field descriptions

`Port`	Port address (cabinet-carrier-slot-circuit) of busied out maintenance objects. ( )
`Maintenance Name`	The type of maintenance object that is being busied out.
`Alt. Name`	Alternate way to identify maintenance objects.

If the Object is	The field contains
station	extension
trunk	*xxx/yyy* (where *xxx* = trunk group number and *yyy* = member number)
private CO line	*P/xxx* (where *xxx* = private CO line group number)

`Result`	Success status of a busied out object (PASS, ABORT, FAIL)
`Error Code`	System-generated description of a command failure.

release station

This command removes specified administered voice terminal extensions from a maintenance busy state.

Action/Object	Qualifier	Qualifier Description	Permissions	Defaults	Feature Interactions
release station	***extension***	Extension number (see dial-plan)	init inads craft cust	none	none

Output

The following example shows the output from the **release station 1002** command.

```
release station 1002

                          COMMAND RESULTS

 Port      Maintenance Name   Alt. Name   Result   Error Code
 01C1102       DIG-LINE                   PASS

Command successfully completed
```

Field descriptions

Port	Port address (cabinet-carrier-slot-circuit) of the released maintenance object.
Maintenance Name	Type of released maintenance object.
Alt. Name	Alternate way to identify maintenance objects. This field contains an extension when the object is a station.
Result	Success status of a busied out object (PASS, ABORT, FAIL)
Error Code	System-generated description of a command failure.

release tdm

This command removes specified tdm buses from a maintenance busy state.

Action/Object	Qualifier	Qualifier Description	Permissions	Defaults	Feature Interactions
release tdm	***port-network pn number***	Port network number of the TDM bus	init inads craft	none	see below
	bus bus	(“a” or “b”) specifies desired half of the TDM bus. Each 512 time slot TDM bus is configured as two duplicate 256 time slot buses. This division allows for duplication of control channels and dedicated tone time slots. The default control bus (carrying the control channel) is the “a” bus, while the default tone bus (carrying dedicated tones) is the “b” bus. (1 - 3)			

Feature Interactions

- The system tears down busied out buses. No new calls can be administered on busied out buses.

- To prevent busyouts of particular buses, technicians should move dedicated tone time slots to another bus (the other half of the duplicated bus).

Output

The following example shows the output from the **release tdm port-network 1 bus a** command.

```
release tdm port-network 1 bus a

                        COMMAND RESULTS

Port     Maintenance Name   Alt. Name   Result    Error Code
PN 01A       TDM-BUS                   PASS

Command successfully completed
```

Field descriptions

`Port`	Port network number (preceded by “PN”) and bus (“A” or “B”) associated with the TDM bus.
`Maintenance Name`	TDM-BUS
`Alt. Name`	Not applicable
`Result`	Success status of a busied out object (PASS, ABORT, FAIL)
`Error Code`	System-generated description of a command failure.

release tone-clock

This command removes specified tone/clocks from maintenance busy states.

Action/Object	Qualifier	Qualifier Description	Permissions	Defaults	Feature Interactions
release tone-clock	***location***	Physical location of the tone/clock: ***PC***	init inads craft	1 (one)	none

Output

The following example shows the output from the **release tone-clock 1a** command.

```
release tone-clock 1a

                          COMMAND RESULTS

Port   Maintenance Name   Alt. Name   Result   Error Code
01A         TONE-PT                    PASS
01A         TDM-CLK                    PASS
01A         TONE-BD                    PASS

Command successfully completed
```

Field descriptions

`Port`	The tone clock circuit pack maintenance object displays the cabinet and carrier of the specified tone/clock board.
`Maintenance Name`	TONE-PT, TDM-CLK and TONE-BD
`Alt. Name`	Not applicable.
`Result`	Success status of a busied out object (PASS, ABORT, FAIL)
`Error Code`	System-generated description of a command failure.

release trunk

This command removes specified trunk groups or trunk group members from a maintenance busy state. Specifying the group number releases a single group member and the member number; specifying the trunk group number releases members in a trunk group.

Action/Object	Qualifier	Qualifier Description	Permissions	Defaults	Feature Interactions
release trunk	***group***	1–99.	init inads craft	none	none
	member	1–99			

Output

The following example shows the output from the **release trunk 78/1** command.

```
release trunk 78/1

                              COMMAND RESULTS

 Port      Maintenance Name    Alt. Name   Result    Error Code
 01C1505         CO_TRK           78/01     PASS

Command successfully completed
```

Field descriptions

`Port`	Port address (cabinet-carrier-slot-circuit) of the released maintenance object.
`Maintenance Name`	The type of maintenance object that is being released.
`Alt. Name`	Alternate way to identify maintenance objects.

If the Object is	The field contains
station	extension
trunk	*xxx/yyy* (where *xxx* = trunk group number and *yyy* = member number)
private CO line	*P/xxx* (where *xxx* = private CO line group number)

`Result`	Success status of a busied out object (PASS, ABORT, FAIL)
`Error Code`	System-generated description of a command failure.

reset board

This command performs a soft reset of every specified, administered port on the port circuit pack. Ports must be busied out before the port circuit pack resets.

WARNING:
This command is service disrupting and may cause extraneous alarms.

Action/Object	Qualifier	Qualifier Description	Permissions	Defaults	Feature Interactions
reset board	***location***	Physical location of board: **PCSS**	init inads craft nms	carrier = 1	none
	repeat number	Number of times command repeats (1– 99)		repeat number = 1	

Output

The following example shows the output from the **reset board 1c07** command and assumes that the board in port network 1, carrier c, slot 7 is an analog board with three administered ports.

```
reset board 1C07

                              TEST RESULTS

 Port    Maintenance Name    Alt. Name Test No. Result    Error Code
 01C07        ANL-BD                      53     PASS

Command Successfully Completed
```

Field descriptions

`Port` Port address (cabinet-carrier-slot) of the reset maintenance object.

`Maintenance Name` Type of reset maintenance object.

`Alt. Name` Alternate way to identify maintenance objects.

If the Object is	The field contains
station	extension
trunk	*xxx/yyy* (where *xxx* = trunk group number and *yyy* = member number)
private CO line	*P/xxx* (where *xxx* = private CO line group number)

`Result` Success status of a busied out object (PASS, ABORT, FAIL)

`Error Code` System-generated description of a command failure.

reset io-processor

This command resets and initializes the IO-Processor hardware and firmware. The IO-Processor supports the packet interface and Data Channel data scanners. The IO-Processor is simply reset. Failure of the reset can lead to the processor being placed in the out-of-service state.

CAUTION:
Resetting the IO-Processor (which also resets the packet interface and Data Channel data scanner) is disruptive. ISDN call service throughout the system is disrupted, and some data may be lost on Data Channel communications during the reset interval.

Action/Object	Qualifier	Qualifier Description	Permissions	Defaults	Feature Interactions
reset io-processor	none	none	init inads craft nms		none

reset interface

This command resets the Processor Interface circuit pack, reads its associated software from tape, restarts applications processes, re-establishes permanent switched calls, and sets up each enabled link. If the interface cannot be established, a Major alarm raises on the interface and all enabled links deactivate. When the Message Server Adjunct (MSA), Distributed Communications System (DCS), Audio Information Exchange (AUDIX), or Call Management System (CMS) are initially administered, links for these applications and submitting the form restarts the interface. Before Processor Interface circuit packs are replaced, technicians must power down the switch and restart it.

For troubleshooting, see "status interface", "status link", and "status processor-channel" commands to locate problems before performing a **reset interface** (link traffic is interrupted).

WARNING:
The interface command interrupts operation of the AP, DCS, AUDIX, CMS or ISDN-PRI.

Action/Object	Qualifier	Qualifier Description	Permissions	Defaults	Feature Interactions
reset interface	***location***	(cabinet-carrier-position) of the processor interface (PI board). The position determines cleared processor interface circuit pack. first processor interface = 1 second processor interface = 2	init inads craft	none	none

reset packet-interface

The IO-Processor controls the one and only Packet-Interface. To reset the Packet-Interface for R6csi, use the **reset io-processor** command. Because this command is not used in this software release, the following error message displays on the status line:

```
Command unavailable; use 'reset io-processor'
```

reset switch-control

This command resets and initializes the switch control hardware and firmware.

Action/Object	Qualifier	Qualifier Description	Permissions	Defaults	Feature Interactions
reset switch-control	none	none	init inads craft nms		none

reset system

This command resets the system beginning with the corresponding vector bit set, a core dump is written to memory card, only if the memory card is the special core dump card), the vector is cleared, and the requested restart is performed.

NOTE:
All successful reset system commands log users off.

Action/Object	Qualifier	Qualifier Description[1]	Permissions	Defaults	Feature Interactions
reset system	***level***	1 = Warm Restart 2 = Cold 2 3 = Cold1 4 = Reboot	init inads craft	none	see below

1. Descriptions of all reset levels are in the "Initialization and Recovery" section of Chapter 1, "Maintenance for R6csi Compact Modular Cabinets".

Feature Interactions

- The **reset command** invokes system initialization like low-level maintenance. Software never escalates requested reset levels; technicians determine the levels.
- Two hardware switches are associated with active SPEs. These hardware switches override demand maintenance activities requested by system technicians.

restore announcements

This command copies announcement data from the active MSS devices to announcement boards.

Action/ Object	Qualifier	Qualifier Description	Permissions	Defaults	Feature Interactions
restore announcements	***print***	Report sent to printer	init inads craft cust rcust	Tape-based: announcement copies from active processor's tape to the announcement board.	see below
	schedule	Command is validated and then a scheduling form displays to schedule execution of the command. The command is then placed in the command queue and is executed at the specified time. The information displayed by the command is sent to the system printer instead of the screen.[1]		Card-mem based: Announcement data copies from active processor's to the announcement board.	

1. Refer to the Report Scheduler and System Printer feature specification for more details.

Feature Interactions

WARNING:
Manager I is blocked for other activities until the command completes (up to 45 minutes).

- If no announcement data module and no NETCON data module are administered, the system denies the command.
- If the announcement data module port is out of service or active (for example, performing an announcement playback), the system denies the command.
- If users are in integrated announcements sessions, the system denies the command.
- If the board is currently uploading or downloading, the system denies the command. Users cannot save or restore announcement after the **restore announcements** command commences.
- If no tape is in the tape drive when users attempt a copy, the command aborts.
- If the MSS is in use by another user or maintenance, the **restore announcements** command is not allowed.
- Unsaved or corrupted announcement files on the MSS, disallow the **restore announcements** command.

- To prepare for a failure, users should copy announcement files to announcement boards. If errors result from hardware or firmware failures, MSS software logs hardware errors with maintenance. When errors occur, the system continually attempts to download boards in 10-minute intervals until a download succeeds, announcements record, or downloads initiate from the SAT. Then, error messages display indicating corrective action. If errors result from hardware or firmware failure, MSS software logs a hardware error with maintenance. Maintenance software invokes tests to diagnose and attempt to correct the problem. If maintenance software fails to correct problems, alarms raise indicating additional corrective action.
- When the system crashes and/or a spontaneous processor interchange occurs, the restore operation fails. Valid announcement files do not appear on the announcement board. To copy the announcements from the active processor's MSS device to the announcement board, restart the command on the newly- active processor. When announcements completely copy to announcement boards, calls do not connect to announcements on the ANN board.
- When announcement boards are plugged in or reset, maintenance performs a series of tests, including a DRAM Checksum test. Tests fail due to power losses to boards, resulting in an automatic download of announcement files.

Output

The following example shows the output from the **restore announcements** command.

```
restore announcements         Page  1 of  1  SPE A

                 RESTORE ANNOUNCEMENTS

Processor  Command Completion Status         Error Code
SPE-A      Success                                0
```

Field descriptions

Processor	Displays the processor that houses the MSS device used to copy announcement data.
Command Completion Status	Specifies successful completion of the command.
Error Code	System-generated description of a command failure.

resume hardware-group

This command resumes the previous **test hardware-group** command its canceled position. Entering another **test hardware-group** disables the **resume hardware-group** command.

A canceled **test hardware-group** command appears as `canceled` on the **status hardware-group** screen. A resumed **test hardware-group** command appears as `active` on the **status hardware-group** screen.

Action/Object	Qualifier	Qualifier Description	Permissions	Defaults	Feature Interactions
resume hardware-group		none	init inads	none	none

Feature Interactions

- Cancelling a test hardware-group command deactivates the test command. The status hardware-group screen displays the state as `canceled`.
- When the **resume hardware-group** command is entered to resume a previously-canceled t**est hardware-group** command, the state of the test command will be changed to `active` on the **status hardware-group** screen.

save announcements

This command copies announcement data from the announcement board to the MSS. The Card-Mem stores announcements for the system. By default, announcement data writes to the MSS device in a simplex processor (SPE) system.

If there integrated announcement boards exist, this command is allowed. The system denies the **save announcement** command if no announcement data modules and no NETCON data modules are administered.

Action/Object	Qualifier	Qualifier Description	Permissions	Defaults	Feature Interactions
save announcements	***spe-active***	Forces the system to write announcement data to specified devices.	init inads craft cust rcust	none	See below

Feature Interactions

WARNING:
Manager I is blocked for other activities until the command completes. (up to 45 minutes).

- If no announcement data module is administered, the system denies the command.
- If the announcement data module port is out of service or active (performing an announcement playback), the system denies the command.
- If no announcements are on the board or a user is in an integrated announcements session, the system denies the command.
- If the board is currently uploading or downloading, the system denies the command. Users cannot record integrated announcements after the **save announcements** command commences even though 15 channels are available for announcement playback (one is reserved for uploading and downloading).
- If no tape is in the tape drive or the tape is write-protected, the command aborts during a save. The command also aborts if no NETCON data module is available.
- The save announcements command will not be allowed if the MSS is in use. The MSS may be in use by either another user or by maintenance.
- The standby processor must be in service with shadowing enabled, so that the system can save announcements to the standby processor.
- In case of a failure, technicians make announcement files consistent across both MSS devices. Files become inconsistent due to hardware failures or spontaneous processor interchanges. If announcement files are inconsistent due to hardware failures that occur during the **save announcements** command, error messages display indicating corrective action. Maintenance software that monitors hardware logs hardware errors to maintenance. Then, maintenance software invokes tests to diagnose and attempt corrective action. If maintenance software fails to correct the problem, an alarm raises displaying corrective action.
- The **save announcements** command writes two time-stamped, identical copies of announcement data to selected devices. The time-stamp for both copies is the same. Each copy contains a timestamp and the state of the copy. (good or bad)
- If good copies of announcement files are not available, the restore announcements command cannot execute until the **save announcements** command completes. Announcements on the board are still usable.

Output

The following example shows the output from the **save announcements** command.

```
save announcements           Page  1 of  1  SPE A

                       SAVE ANNOUNCEMENTS

Processor  Command Completion Status         Error Code
SPE-A      Success                                0
```

Field descriptions

`Processor`	Displays processors when announcement data writes to its devices. (SPE-A and SPE-B)
`Command Completion Status`	This field specifies if the command succeeded.
`Error Code`	Successful save = 0. Failed save = 2.

save translation

All translation data is kept in memory during system operation, and if the switch goes down, the system loses all data. This command allows users to save the in-memory translation data to the memory card. This command runs as part of scheduled maintenance and/or on demand by the technician.

Action/Object	Qualifier	Qualifier Description	Permissions	Defaults	Feature Interactions
save translations	**spe-active**	Translations saved on the active processor's MSS device.	init inads craft cust	none	If translation data changes due to administrative commands, **save translation** cannot be performed.

Output

The following example shows the output from the **save translation** command.

```
save translation

                         SAVE TRANSLATION

Processor   Command Completion Status         Error Code
SPE-A       Success                                0


Command Successfully Completed
```

Field descriptions

Processor	Identifies the processor carrier where translation data is saved. (SPE-A)
Command Completion Status	Displays a variety of messages, identifying the success or failure of the command.

set options

This command enables a remote user with INADS permission to select which types of maintenance categories report alarms automatically and which types require customer call-in. Judicious use of this command can reduce the number of ineffective alarms to the TSC. For effective results, technicians should use the **set options** command default settings specified in this section. Technicians should not change these settings. Special circumstances (for example, special studies) may require temporary changes under the guidance of Tiers 3 and 4.

NOTE:
Alarms do not upgrade.

Action/Object	Qualifier	Qualifier Description	Permissions	Defaults	Feature Interactions
set options		none	init inads	see below	none

Form Input

The following example is a display of the **set options** command.

```
set options                                          Page 1 of  8

                      ALARM REPORTING OPTIONS

                                                 Major  Minor
                  On-board Station Alarms:  w     w
                 Off-board Station Alarms:  w     w
     On-board Trunk Alarms (Alarm Group 1):  y     y
    Off-board Trunk Alarms (Alarm Group 1):  w     w
     On-board Trunk Alarms (Alarm Group 2):  w     w
    Off-board Trunk Alarms (Alarm Group 2):  w     w
     On-board Trunk Alarms (Alarm Group 3):  w     w
    Off-board Trunk Alarms (Alarm Group 3):  w     w
     On-board Trunk Alarms (Alarm Group 4):  w     w
    Off-board Trunk Alarms (Alarm Group 4):  w     w
                   On-boar Adjunct Alarms:  w     w
                         Off-board Alarms:  w     w
                     Off-board DS1 Alarms:  w     w
                 Off-board PI-LINK Alarms:  w     w
                 Off-board Alarms (Other):  w     w
              Memory Card Capacity Alarms:        y
```

```
set options                                          Page  2 of  8

                         TRUNK GROUP ALARM OPTIONS
                                (Alarm Group)

01: 1  11: 1  21: 1  31: 1  41: 1  51: 1  61: 1  71: 1  81: 1  91: 1
02: 1  12: 1  22: 1  32: 1  42: 1  52: 1  62: 1  72: 1  82: 1  92: 1
03: 1  13: 1  23: 1  33: 1  43: 1  53: 1  63: 1  73: 1  83: 1  93: 1
04: 1  14: 1  24: 1  34: 1  44: 1  54: 1  64: 1  74: 1  84: 1  94: 1
05: 1  15: 1  25: 1  35: 1  45: 1  55: 1  65: 1  75: 1  85: 1  95: 1
06: 1  16: 1  26: 1  36: 1  46: 1  56: 1  66: 1  76: 1  86: 1  96: 1
07: 1  17: 1  27: 1  37: 1  47: 1  57: 1  67: 1  77: 1  87: 1  97: 1
08: 1  18: 1  28: 1  38: 1  48: 1  58: 1  68: 1  78: 1  88: 1  98: 1
09: 1  19: 1  29: 1  39: 1  49: 1  59: 1  69: 1  79: 1  89: 1  99: 1
10: 1  20: 1  30: 1  40: 1  50: 1  60: 1  70: 1  80: 1  90: 1
```

NOTE:
Remaining Trunk Group information displays on pages 3-8, and is not documented in this Manual.

The first page of the Alarm Reporting Options Form, provides the following alarm options: the four trunk alarm severity groups, the adjunct alarms, off-board DS1 alarms, and PI-LINK alarms, memory card translation capacity alarms, and other off-board alarms. The second page, known as the Alarm Reporting Options Form, provides alarm severity groups to each trunk group.

The following alarm options are available:

- Minor: Maintenance testing discovers raised alarms, downgrades them to minor alarms, and deactivates alarmed resources. LEDs on the port board and maintenance board follow standard minor alarm LED protocol and call receiving OSSs.
- Warning: Maintenance testing discovers raised alarms, downgrades them to warnings and deactivates alarmed resources. The Alarm Log pinpoints customer-reported trunk or station problems. Alarm LEDs light on the port circuit pack and Maintenance circuit pack as before, but no attendant LEDs or stations reporting alarms are affected. No call is placed to INADS.
- Report: The report option treats alarms the same as warnings with one exception: alarms report to INADS with a special WARNING category. When this type of alarm is received, INADS logs the occurrence and creates a trouble ticket or closes it immediately. Retry strategy for this type of call is similar to normal Major or Minor alarm reports. However, the acknowledgment LED on the attendant console or alarm reporting station does not reflect the status of the call.
- Yes: Alarms raise normally without filtering alarm data.
- No: Alarms that raise on trunks, stations, or adjuncts in this category drop. Error information displays as before, but alarm is evident. LED is inactive and calls are not sent to INADS. Because resources are deactivated without any record, this option is recommended only when other options do not provide desired results.

Technicians can administer alarm options on a system-wide basis for the following categories:

- Major on-board station alarms
- Minor on-board station alarms
- Major off-board station alarms
- Minor off-board station alarms

Trunk alarms have four alarm severity groups with administrable alarm options in the categories listed below. For G1, technicians can administer alarm options on a system-wide basis for the following categories:

- Major on-board trunk alarms
- Minor on-board trunk alarms
- Major off-board trunk alarms
- Minor off-board trunk alarms

Technicians assign alarm severity options to the following Adjunct categories:

- Major on-board adjunct alarms
- Major off-board adjunct alarms

- Minor on-board adjunct alarms
- Minor of-board adjunct alarms

Technicians can administer options for Minor off-board DS1 Interface circuit pack alarms and Minor off-board Memory Card Capacity Alarms on a system-wide basis.

The system inspects alarm reporting options information in the Alarm Reporting Options Form as translation data and preserves it through all restart levels.

This command affects the MO alarming listed below. Neither the trunk nor the station category applies to alarms raised on the common portion of the circuit pack.

If the option associated with the alarm type is set to “n,” the system drops the alarm report. Alarm error information remains intact, but no records of alarms and no LEDs light on the port circuit pack, the Maintenance circuit pack, the attendant console, or alarm reporting station to indicate a problem.

If technicians set the option “warning” or “report,” port circuit pack LEDs and LEDs on the Maintenance circuit pack are affected the same as warning alarms.

Default parameters are:

- The system downgrades all station, trunk (except on-board trunk alarms), and Minor DS1-BD alarms to warning alarms.
- On-board Major and Minor trunk alarms, and the Memory Card Capacity alarm continue to raise alarms and report to INADS.

Station MOs Affected By This Command

NOTE:
Although alarms on some MOs appear as warnings, they should be investigated with user-reported problems.

- Analog Lines (ANL-LINE, ANL-NE-L, ANL-16-L)
- Digital Lines (DIG-LINE)
- Hybrid Lines (HYB-LINE)
- MET Lines (MET-LINE)
- ISDN-BRI Lines (BRI-PORT, BRI-SET)

If more than 75% of the members of the trunk group alarm, minor arms escalate to major alarms. If the trunk category option is set to “warning,” “minor,” “report,” or “no,” this no longer happens. Maintenance reactivates individual trunk members according to Major and Minor alarm criteria.

Trunk MOs Affected By This Command

NOTE:
Although alarms on these MOs may appear as warnings, the alarms should be investigated with user-reported problems.

- Auxiliary Trunks (AUX-TRK)
- Central Office Trunks (CO-TRK)
- Direct Inward Dialing Trunks (DID-TRK)
- Direct Inward and Outward Dial Trunks (DIOD-TRK)
- DS1 Central Office Trunks (CO-DS1)
- DS1 Direct Inward Dialing Trunks (DID-DS1)
- DS1 Tie Trunks (TIE-DS1)
- ISDN Trunks (ISDN-TRK)
- Tie Trunks (TIE-TRK)

Circuit Pack MOs affected by this Command

NOTE:
Although alarms on some MOs appear as warnings, the alarms should be investigated with user-reported problems.

NOTE:
The alarm severity of group one downgrades trunks that are not members of Trunk Groups, (for example, PCOLs).

- DS1 Interface Circuit Pack (DS1-BD)

Adjunct-Related MOs affected by this Command

NOTE:
Although alarms on some MOs appear as warnings, the alarms should be investigated with user-reported problems.

- ASAI Adjunct (ASAI-ADJ)
- Lucent Adjunct Port (ATT-PORT)
- Ethernet ASAI Port (LGATE-PT)
- Ethernet ASAI Adjunct (LGATE-AJ)
- Ethernet Lucent Port (ATTE-PT)
- Ethernet Lucent Adjunct (ATTE_AJ)
- ISDN-BRI Ports connected to Adjuncts (ABRI-PORT)

Adjuncts are administered as stations; however, the administration of alarm severity for the station alarm group does not affect alarm severity levels for adjuncts. Similarly, the administration of alarm severity for the adjunct alarm group does not affect the alarm severity levels for other stations.

PI-Link and associated Link MOs affected by this Command

NOTE:
Although alarms on some MOs appear as warnings, the alarms should be investigated with user-related problems.

- See Processor Interface Link [“PI-LINK (Processor Interface Link)”] for other associated Link Maintenance Objects.

Memory Card MOs Affected by This Command

NOTE:
While this option does not automatically downgrade CAP-MEM alarms, changes to this options may downgrade alarms to warnings. This alarm raises when memory card translation capacity exceeds 98% and is intended to alert Services that larger flash cards may be required.

- Memory Card Capacity (CAP-MEM)

Other MOs Affected by This Command

NOTE:
Although alarms on some MOs appear as warnings, the alarms should be investigated with user-related problems.

- EPN Maintenance Circuit Pack (MAINT)
- ISDN-PRI Signaling Group (ISN-SGR)
- Journal Printer (JNL-PRNT)
- PMS Link (PMS-LINK)
- PMS log printer (PMS-LOG)
- Primary CDR Link (PRI-CDR)
- Secondary CDR Link (SEC-CDR)
- SPE Select Switches (SPE-SELEC)
- Synchronization (SYNC)
- System Communication Interface (PI-SCI)
- System Printer (SYS-PRNT)

- TDM Clock (TDM-CLK)
- Tone Generator Circuit Pack (TONE-BD)

set signaling-group

This command upgrades secondary D-channel in specified signaling groups to primary D-channels. Current primary D-channel then revert to secondary D-channels. A signaling group is a collection of B-channels that designate single D-channels or a set of D-channels signals over an ISDN-PRI.

Action/Object	Qualifier	Qualifier Description	Permissions	Defaults	Feature Interactions
set signaling-group	***group identifier***	administered number associated with each signaling group.	init inads craft	none	none

set synchronization

This command sets DS1 trunks or active tone/clock circuit packs that supply references for synchronization. The **set synchronization** command works after the **disable synchronization** command disables synchronization. Technicians may administer DS1 trunks or active tone/clocks with the **set synchronization** command. DS1 or tone/clocks remain synchronization references until the **set synchronization** command runs with another board or until the **enable synchronization** command runs.

After the **enable synchronization** command runs, administered primary or secondary synchronization sources become synchronization references. If no primary or secondary source is administered, synchronization uses active tone/clock boards as synchronization references after synchronization is enabled.

The synchronization subsystem provides error-free digital communication between the switch and other PBXs, COs, or customer premise equipment. System components involved in synchronization include: TDM bus clock, DS1 trunk board, and maintenance and administration software resident in the SPE.

Action/Object	Qualifier	Qualifier Description	Permissions	Defaults	Feature Interactions
set synchronization	***location***	Physical position of the DS1 trunk or active tone/clock: **PCSS**	init inads craft	none	none

set tdm

The **set tdm** command establishes the TDM bus on a port network that houses control channels and dedicated tones.

Action/Object	Qualifier	Qualifier Description	Permissions	Defaults	Feature Interactions
set tdm	***port network***	Port network number of the TDM bus	init inads craft	none	See below
	pn number bus	("a" or "b") specifies desired half of the TDM bus. Configure each 512 time slot TDM bus as two duplicate 256 time slot buses, allowing duplication of control channels and dedicated tone time slots. A port network number (1 - 3)			
	bus override	Forces the setting of a deactivated bus or a bus whose dedicated tone time slots are active			

Feature Interactions

New calls go to time slots reserved for tones on the bus that have not other time slots when:

- Time slots on a specified bus are in use
- Dedicated tone time slots are on the other half of the bus

A **set** command to buses that have calls on dedicated tone time slots drops these calls.

set time

This command allows changes to the day of the week, the day of the month, the month, year, hour, and minute. The second field resets to zero (0) whenever the time on the clock is altered, but cannot be modified by the technician. The day of the week, entered as a text string, translates to an integer for internal storage. The system clock time remains the same if no changes are entered on the form.

Action/Object	Qualifier	Qualifier Description	Permissions	Defaults	Feature Interactions
set time		none	init inads craft cust rcust bcms browse	System assigns a time if the system clock is never set	Date and time are available to software from a system primitive.

Output

The following example shows the output for the **set time** command.

```
set time                                          Page 1 of 1

                         DATE AND TIME

  DATE
    Day of the Week: _________  Month: _________
   Day of the Month: __          Year: ____

  TIME
         Hour: __     Second:
       Minute: __
```

Field descriptions

`Day of the Week:`	Monday through Sunday
`Day of the Month:`	1-31; the system also checks for leap year.
`Month:`	January through December
`Year:`	1970-2999
`Hour:`	0-23
`Minute:`	0-59
`Second:`	The system sets this field to zero when the time of day clock is set.

set tone-clock

This command sets the active tone/clock for a PN that has a duplicated tone/clock circuit pack. Technicians should reset the default active tone clock in each PN after using the **set tone-clock** command. If it is not in use, a single failure can cause an unnecessary service outage. The schedule maintenance tone-clock switch option does not reset the tone-clock to the default active if it was not active at the beginning of the test.

Action/Object	Qualifier	Qualifier Description	Permissions	Defaults	Feature Interactions
set tone-clock	***location***	Tone/clock location: **PC**	init inads craft	1 (one)	none
	override	Forces the set command into effect regardless of the tone/clock circuit pack's health.			

set vector

This command specifies restart levels for core dumps and places core dumps on primary Mass Storage System (a tape in a tape system and core dump memory cards in a memory card system) devices for later examination. The **set vector** command allows technicians to tailor restart levels that copy memory to primary Mass Storage System devices.

NOTE:
Software never requests an extended reboot.

To force an immediate core dump, set the appropriate bit using this command, then enter the **reset system** command at a level that forces core dumps corresponding to set vector bits.

When a system restart occurs in a simplex system with the corresponding vector bit set, the core dump writes to secondary storage (the primary MSS device). Once the core dump writes, the vector clears and the restart executes.

WARNING:
This command disrupts service in a simplex system.

The active SPE executes a core dump when:

- A system restart occurs on the active SPE with the corresponding vector bit set.
- The active SPE-active option is selected when the vector bit is set.
- The SPE-standby option is selected when the vector bit is set.
- The active SPE-maint option is selected when the vector bit is set.

The vector clears after all core dumps.

Action/ Object	Qualifier	Qualifier Description	Permissions	Defaults	Feature Interactions
set vector	***vector value***	See Vector Condition Mapping values below	init inads craft	none	none

Vector-Condition Mapping

Value	Warm	Cold II	Cold I	Reboot
0	n	n	n	n
1	y	n	n	n
2	n	y	n	n
3	y	y	n	n

Vector-Condition Mapping

Value	Warm	Cold II	Cold I	Reboot
4	n	n	y	n
5	y	n	y	n
6	n	y	y	n
7	y	y	y	n
8	n	n	n	y
9	y	n	n	y
a	n	y	n	y
b	y	y	n	y
c	n	n	y	y
d	y	n	y	y
e	n	y	y	y
f	y	y	y	y

status access-endpoint

This command displays the status of an access endpoint and can be helpful in locating facilities with which access endpoints communicate.

Action/Object	Qualifier	Qualifier Description	Permissions	Defaults	Feature Interactions
status access-endpoint	***extension***	Extension number of the access endpoint	init inads craft cust nms browse	none	none
	print	Report sent to printer			

Output

The following example shows the output for the **status access-endpoint 22502** command. The command assumes that access endpoint ports for extension 22502 are in cabinet 1, carrier C, slot 11, circuit 1 to 6 — that access endpoints are connected on an active call to ports 7 to 12 of the board in location 1B19 (cabinet 1, carrier B, slot 19). This means that port 01C1101 connects to 01B1907, port 01C1102 connects to 01B1908, and port 01C1103 connects to 01B1909.

```
status access-endpoint 22502                page 1 of 1

      ACCESS-ENDPOINT STATUS


             Extension: 22502
       (Starting) Port: 01C1101
    Communication Type: wideband
                 Width: 6

         Service State: in-service/active

       Connected Ports: 01B1907 01B1908 01B1909
                        01B1910 01B1911 01B1912


Command Successfully Completed
```

Field descriptions

`Extension`	Extension of the access endpoint
`(Starting) Port`	Port locations of the access endpoint. For wideband access endpoint, the location shown is that of the starting port.
`Communication Type`	The valid voice and data communication type that the access endpoint is administered. The options are: 56k-data, 64k-data, voice-grade-data, and wideband.
`Width`	For 56k-data, 64k-data, and voice-grade data, the width value is 1. For wideband, this field displays the number of DS0s that make up the access endpoint.
`Service State`	`in-service/active`, `in-service/idle`, and `out-of-service`
`Connected Ports`	Port location connected to the access endpoint for an active call. For wideband, all ports connected to the wideband access endpoint are listed.

status administered-connection

This command provides automatic end-to-end connections between two access/data endpoints.

Action/Object	Qualifier	Qualifier Description	Permissions	Defaults	Feature Interactions
status administered-connection	***ac number*** ***print***	Administered connection number Report sent to printer.	init inads craft cust rcust bcms browse	none	none

Output

The following example shows the output from the **status administered-connection 3** command.

```
status administered-connection 3                 page 1 of 1

                  ADMINISTERED-CONNECTION STATUS


   Connection Number:
             Enabled?
          Originator:
         Destination:
    Connection State:
       Failure Cause:
   Number of Retries:
     Auto Restorable?
```

Field descriptions

`Connection Number:`	Number assigned to the administered connection.
`Enabled?`	Is administered connection enabled? (y or n).
`Originator:`	Extension of originating access/data endpoint.
`Destination:`	Destination address used to route administered connections.
`Connection State:`	Current status of the administered connection. (connected, restored, failed, waiting to retry, attempting to restore, attempting to connect, not scheduled, and disabled.
`Failure Cause:`	Reason that the administered connection is attempting to connect, to restore, or failed to restore. If the administered connection was scheduled to be active but is disconnected, this field shows the most recent failure reason.
`Number of Retries:`	Number of consecutive failed establishment attempts.
`Auto Restorable?`	When an administered connection is connected, this field indicates if auto restoration attempts when a failure occurs.

status attendant

This command diagnoses internal software. This command help to locate facilities to which the attendant console communicates.

Action/Object	Qualifier	Qualifier Description	Permissions	Defaults	Feature Interactions
status attendant	***console number***	Assigned attendant number (1 –16).	init inads craft cust rcust bcms browse	none	none
	print	Report sent to printer			

Output

The following example shows the output from the **status attendant 1** command.

```
status attendant 1

       ATTENDANT STATUS

Console Number: 1            Service State: in-service/night service
          Port: 01C1106    Download Status: no
Connected Ports:

Command successfully completed
```

Field descriptions

`Console Number`	Number assigned to the attendant (1-16).
`Port`	Port location of the attendant (cabinet-carrier-slot-circuit).
`Service State`	In-service/idle, in-service/active, out of service, or disconnected.
`Usage State`	Idle or active.
`Maintenance Busy State`	Is maintenance testing the object? (y or n)
`Connected Ports`	Port locations to which the attendant is communicating (cabinet-carrier-slot-circuit).

status audits

This command displays results of Data Relation Audits that are built into the switch. Data Relation Audits check for inconsistencies between selected data items in the switch, and report inconsistencies. Data Relation Audits are useful during development and testing phases of projects to uncover software errors. In the field they help the switch to recover from data corruption before service is interrupted.

This command displays the date and time that the requested interval begins, the number of times that the full sequence of audits executes (audit cycles), and status information about each audit that detected a problem or aborted during the interval. The status information contains:

- The name of the audit
- The number of times that an audit ran and corrected an error
- The number of times that an audit ran and detected an irreparable error
- The number of times that an audit ran and aborted
- The date and time that the audit first detected a problem (only for cumulative)
- The time of the most recent error detected by the audit (only for cumulative)

Audit data information cumulates from the last reboot or the last **clear audits cumulative** command, and for peak hours since the last reboot or the last **clear audits peak-hour** or **clear audits cumulative** commands.

NOTE:
Single process restarts, warm starts, cold 2 restarts, cold 1 restarts, or processor interchanges do not clear this data.

Audits can execute directly using the **test MO** command. For example, **test MO l 8192 p 512 t 0** executes the Station Connections Audits, audit lnames and numbers (pnames) included in the Table Of Audits. When the “test MO” command executes an audit, report results display on the screen. In general, errors discovered from a demand tests are not logged in the error logs. To be consistent with other error logging, and to avoid confusion, errors that are discovered from a demand test that executes an audit are not displayed.

The screen does not automatically update, but reflects the system at the time of the request.

Action/ Object	Qualifier	Qualifier Description	Permissions	Defaults	Feature Interactions
status audits	***peak-hour***	data collected since the last reboot or since the last execution of the **clear audits cumulative** command.	init inads	none	see below
	cumulative	Data for the peak hour since the last reboot or since the last execution of the **clear audits cumulative** or **clear audits peak-hour** command.			
	print	Report sent to printer			
	schedule	Command is validated and then a scheduling form displays to schedule execution of the command. The command is then placed in the command queue and is executed at the specified time. The information displayed by the command is sent to the system printer instead of the screen.[1]			

1. Refer to the Report Scheduler and System Printer feature specification for more details.

Output

The following example shows the output from the **status audits** command.

```
status audits cumulative

                         AUDIT STATUS INFORMATION

Start Date: 13:00 MON MAR 19 1997       # of Audit Cycles Completed: 67532

Audit      # Cycles    # Cycles Could    # Cycles       First       Most Recent
Name       Fixed Data   Not Fix Data   Audit Aborted    Error          Error

HTLK           0           *****             0       03/22/10:14  06/24/16:03
CR-AUDIT      135            0               0       03/22/10:12  06/10/19:17
HU-CALLS       2             0               0       03/22/10:12  03/22/10:20
SE-CALLS       1             0               1       03/22/10:13  03/22/19:14
TTR-SID        1             0               0       05/01/02:17  05/01/02:17
CO-CALLS       1             0               0       05/01/02:16  05/01/02:16
DE-CALLS       1             0               0       03/22/10:12  03/22/10:12
TR-QUE         1             0               0       04/05/13:05  04/05/13:05
CTRK           0             1               0       03/22/10:12  03/22/10:12
AT-ADM         1             0               0       03/22/10:12  03/22/10:12
CO-ADM         1             0               0       03/22/10:13  03/22/10:13
PC-ADM         1             0               0       04/05/15:05  04/05/15:05
PRI-USR (SCH)  1             0               0       03/22/10:14  03/22/10:14

Command successfully completed
```

```
status audits peak-hour

                          AUDIT STATUS INFORMATION

 Start Date: 10:00 MON MAR 22 1997    # of Audit Cycles Completed:  25

 Audit        # Cycles    # Cycles Could      # Cycles
 Name        Fixed Data    Not Fix Data     Audit Aborted
 HTLK             0             25                0
 HU-CALLS         2              0                0
 CR-AUDIT         1              0                0
 DE-CALLS         1              0                0
 CTRK             0              1                0
 AT-ADM           1              0                0
 CO-ADM           1              0                0
 SE-CALLS         0              0                1
 PRI-USR (SCH)    1             0                 0

 Command successfully completed
```

Audit information displays with one line of data displayed audit that has detected an error or aborted. Audits that did not detect any errors or aborted do not display. The output sorts in descending order, based on the sum of the values in the `# Cycles Fixed Data`, `# Cycles Could Not Fix Data`, and `# Cycles Audit Aborted` fields.

Field descriptions

`Start Date`

Date and time that interval begins. “cumulative” = date and time of the last reboot or execution of the “clear audits cumulative” command.
“peak-hour” = date and time of the beginning of the peak hour since the last reboot or execution of a “clear audits cumulative” or “clear audits peak-hour” command.

`# of Audit Cycles Completed`

Number of audit cycles completed in the specified interval (0 – 999999). Asterisks indicate numbers that exceed 999999. The switch executes audits in a set order. After all audits execute, the switch restarts the sequence.

NOTE:
Since this field shows the number of completed audit cycles, it is possible that individual audit values, can be larger than the values described below (if the switch is partially through another audit cycle). Audit Cycles numbers do not apply to these audits that execute as part of scheduled maintenance.

`Audit Name`	Audit's name that detected an error or aborted. A few audits do not run in the normal audit sequence. Instead, they execute as part of scheduled maintenance and are marked with "(SCH)" following the audit name.
`# Cycles Fixed Data`	Number of times that the audit ran, in the specified interval, and found a fixable problem. (0–65534) Asterisks are used form numbers that exceed 65534.
`# Cycles Could Not Fix Data`	Number of times that the audit ran, in the specified interval, and found an unfixable problem. The audited switch data is inconsistent when this happens. (0–65534) Asterisks are used for numbers that exceed 65534.
`# Cycles Audit Aborted`	Number of times that the audit ran, in the specified interval, and aborted due to an internal error. (0–65534) Asterisks are for numbers that exceed 65534.
`First Error`	Date and time that the audit first detected fixed data, could not fix data or audit aborted problems since the last **clear audits cumulative** command. Example: 03/27/14:31 for 2:31 pm, March 27th. This field appears with the **status audits cumulative** display.
`Most Recent Error`	Date and time that the audit last detected fixed data, could not fix data or audit aborted problems since the last "clear audits cumulative" command. Example: 03/27/14:31 for 2:31 pm, March 27th. This field appears with the **status audits cumulative** display.

Feature Interactions

The **clear audits** command affects the data displayed by **status audits cumulative** and **status audits peak-hour**. The **clear audits cumulative** command clears data collected to date, resets the start time kept for that data, and clears peak hour data. The **clear audits peak-hour** command clears data kept for the peak hour so that a new peak hour can be established.

When the **schedule** option is specified, a scheduling form is displays allowing the technician to schedule command execution. Refer to the Report Scheduler and System Printer feature specification [3] for details about the scheduling form.

Table of audits

The following table shows the names of the audits that are run as part of time available maintenance, the audit number (pname) and a short description of each audit. These audits execute using lname MO_DR_AUDIT (8192). These audits may execute using the *test MO* command with lname 8192, pname "audit number," and test number 0 (for example, *test MO l 8192 p 607 t 0* executes the AC state audit).

Audit Name	Audit Number	Description
AC-ISG	607	AC state audit
ADJUSR	595	Adjunct user record audit
ADMTRM	559	Administration terminal audit
ANUR-A	589	Announcement user record audit
AN-ADM	574	Announcement group administration audit
AN-CALLS	572	Announcement group calls audit
AN-QUE	577	Announcement group queue audit
AQSA	545	ACB queue slot allocation audit
ASLINK	606	ASAI link status audit
ASYLED	605	ASAI yellow LED audit
ATACT	558	Attendant active audit
ATAV	557	Attendant availability audit
ATDRCNT	576	Attendant resource count audit
AT-ADM	529	Attendant group administration audit
AT-CALLS	515	Attendant group calls audit
AT-QUE	523	Attendant group queue audit
AUR-A	540	Attendant user record audit
AU-CIDP	596	Announcement user cid/port audit
AWOH-UR	614	Admin Without Hardware Split User Record Audit
B2B-TAB	617	Board-to-Board Link Audit
BR-CALLS	629	Bridged extensions audit
BUTLK	560	Button lock audit
CALK	569	Coverage answer member lock audit
CATT	527	Attendant connections audit
CCTRTAB	624	Call Classifier Tone Receiver Table Audit
CCTR-SID	600	Call classifier tone receiver audit
CDM	528	Data module connections audit
CO-ADM	530	Coverage group administration audit
CO-CALLS	516	Coverage group calls audit

Continued on next page

Audit Name	Audit Number	Description
CPROC	585	Call process/call record audit
CPTRTAB	623	Call Progress Tone Receiver Table Audit
CPTR-SID	601	Call progress tone receiver audit
CPWAKEUP	586	Wake up call process audit
CR-AUDIT	513	Call processing data audit
CSR-A	544	Connection service record audit
CSTAT	512	Station connections audit
CTRK	526	Trunk connections audit
DA-CALLS	583	DAP call record audit
DA-MSG	584	DAP message buffer audit
DE-ADM	531	Data extension group administration audit
DE-CALLS	517	Data extension group calls audit
DMLK	563	Data module lock audit
DUR-A	543	Data user record audit
DXLK	567	Data extension member lock audit
FHT	554	Facility status hundreds table audit
FTED	553	Facility status tracked user audit
FTING	552	Facility tracking user audit
FTSRA	593	Fiber time-slot record allocation audit
GIP-TIMER	609	GIP Timer Audit
HTLK	568	Hunt member lock audit
HU-ADM	532	Hunt group administration audit
HU-CALLS	518	Hunt group calls audit
HU-QUE	524	Hunt group queue audit
IAP-CALLS	590	IAP call record audit
IAP-URB	591	IAP user record audit
IM-HMM	579	HMM image table audit
INST-LNK	604	Instigator/down-link user link audit
ISGR-A	594	ISG call record audit

Continued on next page

Audit Name	Audit Number	Description
LOG-A	570	MDM error/alarm log audit
MAP-HMM	580	HMM map status table audit
MCT-ADM	561	Malicious call trace administration audit
MIS-FAC	587	MIS facility state audit
MP-ADM	575	Modem pool group administration audit
MP-CALLS	573	Modem pool group calls audit
MSGQ-HMM	582	HMM map request queue audit
MST-LOG	549	MST Logging Buffer Audit
MST-STATE	546	MST State Audit
MS-CALLS	588	MISAP call record audit
MUV	555	Message user verification audit
MWIA	550	Message waiting indicator audit
MWL-NOAP	599	Message waiting lamp no AP audit
PA-ADM	533	Paging group administration audit
PA-CALLS	519	Paging group calls audit
PCLK	566	PCOL member lock audit
PC-ADM	535	Personal CO line group administration audit
PC-CALLS	521	Personal CO line group calls audit
PINC-TAB	612	Packet Inter-Port Network Connection Sub-Table audit
PI-ADM	534	Pickup group administration audit
PLIP-LNK	602	LIP link audit
PN-HMM	578	HMM pname table audit
PRI-CR	598	PRI call record audit
PRI-TBUF	592	TSCUUI buffer audit
PUR-A	541	Phantom user record audit
SDSBUF	581	Service dispatcher stim buffer audit
SDSID	571	Service dispatcher SID audit
SE-ADM	538	Terminating extension group administration audit
SE-CALLS	537	Terminating extension group calls audit

Continued on next page

Audit Name	Audit Number	Description
STNLK	562	Station lock audit
SUR-A	539	Station user record audit
S-INC-TAB	611	Service Inter-Port Network Connection Sub-Table audit
S-PT-TAB	610	Service-Port Connection Sub-Table audit
S-TAB	620	Service Table Audit
TEGLK	565	TEG member lock audit
TKLK	564	Trunk lock audit
TONE-TS	608	Tone Time Slot Subtable Audit
TR-ADM	536	Trunk group administration audit
TR-CALLS	522	Trunk group calls audit
TR-QUE	525	Trunk group queue audit
TSC-PRI	520	ISDN-PRI TSC resource audit
TSRA	547	Time slot record allocation audit
TTI-STATE	618	TTI State Audit
TTI-TRANS	619	TTI Translation Audit
TTR-SID	514	Touch tone receiver audit
TTR-TAB	622	Touch Tone Receiver Table Audit
TUR-A	542	Trunk user record audit
T-TS-TAB	613	Tone Time Slot Connection Sub-Table Audit
UGMA	551	User group membership audit
UPUSR-LNK	603	Up-link user link record audit
URMB	548	User record maintenance busy audit
X25-CHAN	615	X.25 Channel Status Audit
X25-LINK	616	X.25 Link Status Audit

The following table shows the names of audits that run as part of scheduled maintenance, the audit number (pname) and a short description of each audit. These audits execute using lname MO_SCH_AUDIT (8193). These audits may execute using the *test MO* command with lname 8193, pname “audit number,” and test number 0 (for example, *test MO l 8193 p 556 t 0* executes the Message Waiting Lamp Audit audit).

Audit Name	Audit Number	Description
MWL	556	Message Waiting Lamp Audit
PRI-USR	597	PRI user record audit
SUR-FREE	625	Station User Record Free List Audit

status bri-port

This command displays the service state, maintenance state and layer 1 state of an ISDN-BRI port. This form also displays information about point-to-point signaling links that transport over the port.

Action/Object	Qualifier	Qualifier Description	Permissions	Defaults	Feature Interactions
status bri-port	***location***	Port location: **PCSSpp**	init inads craft cust nms browse	none	none
	print	Report sent to printer			

Output

For the following example shows the output from the **status bri-port 1c1701** command.

```
status bri-port 1c1701                Page 1 of  1  SPE A

                           STATUS BRI-PORT

             Port: 01C1701
    Service State: in-service
Maintenance Busy?: no
    Layer 1 State: activated

     TEI Value  Layer2 State   Endpt Extension   Endpt SPID   Service SPID?

Link1   64      13-established      1010            1010

Link2

Link3
```

Field descriptions

`Port:` ISDN-BRI port address.

`Service State:` ISDN-BRI port is “in-service” or “out-of-service.”

`Maintenance Busy?:` specifies if maintenance testing is executing on the ISDN-BRI port (“yes” or “no”).

`Layer 1 State:` BRI Layer 1 (physical) state on the port. Valid states are “activated,” “pend-activation,” and “deactivated.”

- “activated” state = layer 1 frames are passing between the port and BRI endpoints.
- “pend-activation” state = the port is in-service, the layer 1 interface device is on, layer 1 frames are sending to the BRI endpoints connected to this port, but BRI endpoints are not responding.
- “deactivated” state = the layer 1 interface device on the BRI is off, because the port goes out-of-service.

`TEI Value` Layer 2 addressing parameter used by the switch to exchange information over point-to-point signaling links between BRI endpoints. Each point-to-point signaling link has an associated TEI. This field displays the addressing parameter value. (0–127)

`Layer2 State:` Point-to-point signaling link layer 2 state. Valid states are “un-assigned,” “assigned,” “established,” “l3-established” or “hyperactive.”

- “un-assigned” = the link is in TEI-UNASSIGN state at Layer 2.
- “assigned” state = the link is in the AWAIT_EST (Await Establish) state at layer 2. (If BRI endpoints support TEI allocation procedures, they successfully execute and a TEI is assigned to the endpoint by the switch.
- “established” = the link is in the MF_EST_NORM (Multi-Frame Established Normal) state at layer 2. The switch successfully initiates the link can now exchange layer 3 frames with the endpoint. If the endpoint does not support SPID initialization procedures, the endpoint extension associated with the link also displays. This is the normal state for the link in the point-to-point wiring configuration.
- “l3-established” = link is in the MF_EST_NORM state at layer 2 and SPID initialization procedures successfully complete. The endpoint extension associated with the link also displays. This is the normal state for the link in the multi-point wiring configuration.
- “hyperactive” = traffic on this link goes over threshold. The link suspends and is deemed hyperactive.

`Endpt Extension`	Voice/data endpoint extension associated with the link if the link is in the “established” (point-to-point configuration) or “l3-established” (multipoint configuration) layer 2 state. Otherwise, this field is blank.
`Endpt SPID`	This field displays the SPID administered on the voice/data endpoint associated with the link. Note that this information is displayed only if the link is in either the “established” (point-to-point configuration) or the “13-established” (multipoint configuration) layer 2 state. Otherwise this field is blank.
`Service SPID`	Indicates if the link is associated with the Service SPID. If the link is associated with Service Spuds, the field contains a “yes” and the endpoint extension field is blank; otherwise, this field is blank. Service SPID checks building wiring between the switch and the BRI endpoint.

Status bri-port interpretation

The following table provides information on the status bri-port form.

Table 2-2. Status BRI-Port Command Interpretation

Endpoint Types	TEI Range	Layer 2 State	Voice Extension	Service SPID	Description / Recommendation
ASAI, BRI	0-126	Assigned	blank	blank	Transitory state for BRI endpoints and ASAI adjuncts. The switch attempts link establishment. 1. Check endpoints and wiring by following SPID Facility Test Procedures described in the BRI-SET (ISDN-BRI Set/ASAI Adjunct) Maintenance documentation. 2. Verify repairs with **status bri-port PCSSpp**. Determine that L2 state of the signaling link is “L3-Established” for ASAI adjuncts and BRI endpoints supporting MIM (management information messages) initialization and “Established” for fixed TEIBRI endpoints and automatic TEIBRI endpoints not supporting MIM initialization. **NOTE:** A MIM is a level-3 message that conveys management and maintenance information between communications systems and BRI terminals.
ASAI	0-63	Established	blank	blank	Transitory state for ASAI adjuncts. ASAI signaling is connects at Layer 2. Layer 3 Restart procedure does not complete between switch and adjunct. 1. Check the adjunct by following the manufacturer’s recommended repair procedures. 2. Verify repairs by executing the **status bri-port PCSSpp** command. Determine that the L2 state of the signaling link is L3-Established.

Continued on next page

Table 2-2. Status BRI-Port Command Interpretation — *Continued*

Endpoint Types	TEI Range	Layer 2 State	Voice Extension	Service SPID	Description / Recommendation
BRI	0-126	Established	ext	blank	Normal state for non-MIM initializing, fixed and automatic TEIBRI endpoints.
BRI, ASAI	64-126	Established	blank	blank	Transitory state for automatic TEIBRI endpoints which support MIM initialization. 1. Verify that SPID administration on the switch and endpoint are consistent. Verify the repair by executing the **status bri-port PCSSpp** command. Determine that the L2 state of the signaling link is L3-Established. Otherwise, proceed to Step 2. 2. Try to replace the endpoint. Verify the repair by executing the **status bri-port PCSSpp** command. Determine that the L2 state of the signaling link is L3-Established.
BRI	64-126	L3-Established	ext	blank	Normal state for automatic TEIBRI endpoints supporting MIM initialization.
BRI, ASAI	64-126	L3-Established	blank	yes	Technicians conduct SPID facilitation tests on the port. Links are not associated with BRI port endpoints. See description of SPID Facility Test Procedures in the "BRI-SET, ASAI-ADJ, BRI-DAT" maintenance documentation.
BRI	64-126	L3-Established	ext	yes	Technicians conduct SPID facilitation tests on the port. Links are associated with port endpoints. See description of SPID Facility Test Procedures in the "BRI-SET, ASAI-ADJ, BRI-DAT" maintenance documentation.

Continued on next page

Table 2-2. Status BRI-Port Command Interpretation — *Continued*

Endpoint Types	TEI Range	Layer 2 State	Voice Extension	Service SPID	Description / Recommendation
BRI	0-126	L3-Established	blank	blank	Invalid SPID assigned to link. 1. Change the SPID value in the BRI endpoint to match the SPID administered to the BRI endpoint on the port. Verify the repair by executing the **status bri-port PCSSpp** command. Determine that the L2 state of the BRI endpoint is L3-Established.
BRI *(cont'd)*	0-126	L3-Assigned	ext	blank	Transitory state for BRI endpoints which support MIM initialization. 2. Wait for five seconds and repeat the command. If the state has not changed, continue with Step 2. 3. Make sure SPID administration on the switch and endpoint are consistent. Verify the repair by executing the **status bri-port PCSSpp** command. Determine that the L2 state of the signaling link is L3-Established. Otherwise, go to Step 3. 4. Try to replace the endpoint. Verify the repair by executing the **status bri-port PCSSpp** command. Determine that the L2 state of the signaling link is L3-Established.

Continued on next page

Table 2-2. Status BRI-Port Command Interpretation — *Continued*

Endpoint Types	TEI Range	Layer 2 State	Voice Extension	Service SPID	Description / Recommendation
BRI *(cont'd)*	0-126	L3-Assigned	ext	yes	Transitory state for BRI endpoints which support MIM initialization when SPID Facility Test initializes the station. 5. Wait for five seconds and repeat the command. If the state has not changed, continue with Step 2. 6. Make sure SPID administration on the switch and endpoints are consistent. Verify the repair by executing the **status bri-port PCSSpp** command. Determine that the L2 state of the signaling link is L3-Established. Otherwise, go to Step 3. 7. Try to replace the endpoint. Verify the repair by executing the **status bri-port PCSSpp** command. Determine that the L2 state of the signaling link is L3-Established.
ASAI	0-126	Hyperactive	ignore	ignore	Link has sent too many messages per unit time.
BRI					Signaling suspends. System timeouts in 60 seconds and attempts reactivate the link. If links remain in this state while no activity occurs at BRI endpoints: 1. Ensure that SPID switch administration and endpoints are consistent. Verify repairs by executing the **status bri-port PCSSpp** command. Determine that the L2 state of the signaling link is L3-Established. 2. Replace the endpoint. Verify repairs by executing the **status bri-port PCSSpp** command. Determine that the L2 state of the signaling link is L3-Established.

Continued on next page

Table 2-2. Status BRI-Port Command Interpretation — *Continued*

Endpoint Types	TEI Range	Layer 2 State	Voice Extension	Service SPID	Description / Recommendation
ASAI	0-126	L3-Restarting	ext		The switch sends a Restart message to the adjunct but has not received a Restart Acknowledgment message from the adjunct.
ASAI	0-126	L3-Restarted	ext		After receiving a Restart Acknowledgment message, the switch sends a Heartbeat message to the adjunct and awaits a response.
ASAI	0-126	L3-Established	ext		Normal state for ASAI adjunct.

status card-mem

Memory cards are portable, compact memory cards that contain banks of flash EPROM chips. Non-volatile memory cards are eraseable and randomly programmed with user data. Main memory stores system software in its “flash” section. Memory cards that save translations do not contain copies of the system software. During system reboot or system power down conditions, in-core system maintenance hardware error logs temporarily save in memory cards before the system goes down. Then, the error logs file reads back when the system restarts. The Hard Patch feature also uses the memory card as temporary storage when LMM applies patched files to the system software.

The **status card-mem** command displays the following memory card information located at active or standby SPEs:

- Is a valid memory card in place?
- Is the memory card write-protected?
- What is the capacity of the inserted memory card?
- What kind of system configuration - small or medium?
- What is the number of pulses counted in the last erase operation?
- What is the percentage of translation storage space used?
- What are the names of files stored in the memory card, and what is date and time (if available) when it was saved?

Action/Object	Qualifier	Qualifier Description	Permissions	Defaults	Feature Interactions
status card-mem	***location***	Physical carrier position of memory card: **PC** (1A).	init inads craft cust rcust nms bcms browse	none	see below
	print	Report sent to printer			

Feature Interactions

- If the Announcement feature is unavailable in the system features configuration, the `Data Present` field is always n for the announcements file. The Announcement feature requires a memory card with a minimum capacity of 4 MB. If the memory card is less than 4 MB, Announcements cannot be save in the memory card.
- Core Dump features require 10 MB memory cards for saving core dumps. If the memory card has a capacity less than 10 MB, the core dump operation fails.

Output

The following example shows the output from the **status card-mem** command.

```
status card-mem

                        MEMORY CARD STATUS

     Location: 01A                    Write Protection: off
       Status: inserted                  Capacity (MB): 4 Series 1
  System Size: Medium           Number of Erase Pulses: 78
  Card Format: G3v5 Translation Storage Space Used (%): 21


   File Name    Data Present    Date      Time
   translation       y         2/17/97   9:00
   announcements     y         2/15/97  20:30

Command successfully completed
```

Field descriptions

`Location` Physical location (carrier) of the memory card = **PC** (always 1A).

`System Size` System configuration (`Small` or `Medium`). This information catches errors such as an incorrectly-sized memory card.

`Capacity`

Memory card capacity and the series number (a 3-digit format for the memory card size and a 1-digit format for the series number). Memory card file contents are described below.

Capacity of Memory Card

Card Size	User	Customer File Names
1 Mb	Small w/o Announcements	translation
4 Mb	Medium w/o Announcements	translation
4 Mb	Small and Medium with Announcements	translation announcements
10 Mb	Maintenance (core dump)	translation announcements core_dump
20 Mb	System Upgrade	system_software

`Status`

`inserted` = valid card is in the memory card slot, and the switch can perform I/O operations to the memory card.

`no card` = no card is inserted, or the card has a bad connection.

`unformatted` = the card is unformatted, or the switch cannot recognized it.

`Write-Protection`

`on` = the write-protection toggle on the memory card is on; `off` = the write-protection toggle on the memory card is off. If the `Write-Protection` field is `on`, the switch cannot store files to the memory card.

`Number of Erase Pulses`

A decimal integer indicating the "wear" condition of the memory card. An erase failure indicates that the software-defined threshold has been reached and the card should be replaced.

`Translation Storage Space Used (%)`

Percentage of reserved storage space for translation files in the memory card.

NOTE:
This percentage is valid for the specific memory card used in the *most recent* save translation operation (implemented with the **save translation** command or with scheduled maintenance and save translation enabled). If the memory card is replaced with another card or if no save translation is performed on the new memory card, the percentage does **not** indicate the translation storage space used in the new card.

`File Name`

Filename (see “Capacity of Memory Card” table above)

`Data Present`

If the file contains valid data, then y displays; otherwise, n.

`Date Time` This field shows the date and time when the file was saved into the memory card. For the “Software Upgrade” type of memory card, this field contains the system software release number instead of the time stamp. Due to a restriction of “core dump” file formats, the year information is not available in the date/time string.

status cdr-link

This command displays the status of call detail recording (CDR) links. Link up or down status displays. If a link is down, the system displays the number of times the switch attempts link setup.

Call detail recording (CDR) links physically link SPEs to a recording device (for example, printer) for sending CDR call records. CDR link are composed of a data channel on the NETCON board or EIA port on the processor circuit pack, a digital port and a data module. Two CDR links can exist in the system.

Action/Object	Qualifier	Qualifier Description	Permissions	Defaults	Feature Interactions
status cdr-link	***print***	Report sent to printer.	init inads craft cust rcust nms bcms browse	none	none

Output

The following example shows the output from the **status cdr-link** command.

```
status cdr-link

                        CDR LINK STATUS

         Primary                        Secondary
       Link State: up                   extension not administered
Number of Retries: 0
 Maintenance Busy? no
```

Field descriptions

`Link State`	`up` = link is up and available to the application. (normal state) `down` = link is physically down. `Extension not administered` = administer **system cdr feature** form.
`Number of Retries`	The number of times the switch tried to initialize the link.
`Maintenance Busy`	`yes` = maintenance object is busied out; `no` = not busied out.

status cleared-alarm-notif

Expert Systems use this command to detect chronic alarming conditions. If this command displays `Feature is suspended`, Expert Systems can identify open trouble tickets as chronic problems for special consideration.

Action/Object	Qualifier	Qualifier Description	Permissions	Defaults	Feature Interactions
cleared-alarm-notif	***1***	First OSS telephone number status of Cleared Alarm Notification.	init inads craft cust rcust	First OSS telephone number for the Cleared Alarm Notification status.	none
	2	Second OSS telephone number status of Cleared Alarm Notification.			

status conference

Use this command to solve the following multimedia problems:

1. A user cannot join or remain connected to a conference.
2. Automatic algorithms — audio AUTO mode and the Px64 video picture specifications downgrade the conference, causing poor video quality.
3. A user does not receive full service.
4. An audio add-on user cannot join or remain connected to a conference.
5. A conferee is not seen by other users due to interworking problems.
6. Users cannot participate in Multipoint Communications Service conferences.
7. Continuous conferences do not move endpoints in or out of quadrants.

Action/Object	Qualifier	Qualifier Description	Permissions	Defaults	Feature Interactions
status conference	***status conference***	Stored conference data.	init inads craft	Conference-ID = **all** (all stored data).	none
	status conference 2 print	Conference 2 data (current or last completed). Sends report to printer.			

Output

```
status 50                                                    Page  1 of   2
                        STATUS OF CONFERENCE: 50  Status: in-use
Conference Name: MMCH DYNAMIC          Conference Mode: voice-activated
 Password Scope:
       Password:                           Cascade Mode:
          Class: dedicated                   Audio Mode: G.728
Start Time/Date: 09:08 OCT 28         Data Mode: none      MLP Rate:
 Stop Time/Date: 00:00 000 00   Admin Bandwidth: 64k       No of Channels: 2
          Chair:                  Conf Bandwidth: 64k      Rate Adaptation? y
Format (in/out): CIF              FPS: 7.5  QFPS: 7.5   Lo/Hi Interworking? n

                            Dial In  ----Capability---- Rate Bond
   Type Ext Meet-Me Number   Type Use Chl Aud Vid Mlp Gx Adpt Mode Ts Vs
1: P64                       in   c   y   y   c      e               b
2: AUD                       out  y       y
3:
4:
5:
6:
```

sddfsoc KLC 010397

Screen 2-1. status conference: page 1 of 2

It is possible for several records to display. Active conferences display first (in order of conference-ID), followed by completed conferences (most recently completed first). Conferences that have not begun have no data or information.

Conference data displays in 2 parts: the first screen describes the status of the conference and indicates the modes and levels of the conference. It also identifies in-use endpoints that cause conference operating modes to change. This screen is similar to the administration screens. The remainder of the screens display endpoint level data (up to 8 endpoints per screen), revealing ports and drop reasons.

Screen 2-1 shows page 1 of a typical administration screen. The first screen appears when **status conference** is entered and at least 1 valid conference is found.

Field descriptions (status conference, page 1)

status	Current status of the conference (active, in-use, complete)
conference name	(MMCH DYNAMIC)
conference mode	(Voice-activated)
password	Not Applicable
password scope	Not Applicable
cascade mode	Conference cascade mode (blank)
audio mode	Current operating audio mode (G.711-A, G.711-mu, G.728. G.722)
class	Conference type (dedicated)
data mode	Conference data mode capability (none, any-mlp, ww-pcs)
MLP rate	Conference MLP Data Rate (blank).
start time/date	Conference start time in 24-hour notation with month and day.
stop time/date	End of conference in 24-hour notation with month and day. It is the actual end time if Status is complete; otherwise, it is blank.
admin bandwidth	Channel bandwidth administered on the Conference Record form. (64k)
no of channels	Number of channels required for each Px64 endpoint (2)
Chair	Current chair token holder. ( )
conf bandwidth	Current operating channel conference bandwidth. Different from the administered bandwidth because of Rate Adaptation.
Rate adaptation	Does this conference support Rate Adaptation? (n, y)

Format (in/out)	The video format for single-screen conferences: CIF, QCIF, QCIF/CIF, H.CTS, H.CTX+, and SG4. non-H.261 conferences = input and output formats are always symmetric and the mode is the same for input and output. (H.CTX, H.CTX+, and SG4). H.261 mode non-continuous presence conferences = symmetric format (CIF and QCIF). Non-presentation, continuous presence conference in single-screen = symmetric format (CIF and QCIF). Presentation mode H.261 single screen continuous presence capable conferences = symmetric input and output formats QCIF/CIF (displayed as CIF) or asymmetric QCIF/CIF, if the administered format is upgradable. For quad-screen conferences = the format is QCIF/CIF to reflect the QCIF input from all participants and output of CIF to all participants. For presentation mode quad-screen conference = the format is QCIF/CIF to reflect the input/output of all participants except the presenter. In quad-screen mode, presenter input is always CIF.
FPS	The CIF frame rate (frames per second) - '-', 30, 15, 10, 7.5. FPS indicates the rate that endpoints can receive frames. The MCU cannot detect maximum transmit frame rates or current frame rates. Frame rates change due to the amount of motion in the input image.
QFPS	The ACIF frame rate (frames per second) (' - ', 30, 15, 10, 7.5). The rate that an endpoint can generate/receive frames. Quad-screen VAS conferences = QFPS reflects the highest common QCIF frame rate of all endpoints and the video mixer board rate, that is lower than the rest of the participants. QCIF calculation accounts for the highest common CIF frame rate declared by all conference participants, since the QCIF rate cannot be greater than that of the highest common CIF rate. Quad-screen presentation conferences = QFPS reflects the highest common QCIF frame rate of all participants and the video mixer board rate. QFPS cannot be greater than the CIF frame rate that is announced by the presenter. QFPS field is blank for proprietary modes.
lo/hi interworking	Does this conference support Low Speed/High Speed Interworking? This field defaults to n.
Type	The type of conferee — Audio/Video (P64), Audio Add-on (AUD), Cascade Link (CAS), BONDing Call (BOND), BONDing Cascade Link (BCAS), UCC Controller (UCC), or Dedicated Access (DA). BONDing calls use up to 12 channels to form a single multimedia pipe.
Ext	Administered endpoint extension. ( ).

`Meet-me number`	The Meet-Me Number administered for the Meet-Me Extension. ( )
`Dial Type`	“in” = dial-in to join endpoint to conference. “out” = dial-out to join endpoint to conference.
`In Use`	“y” = the endpoint is in use and is fully-connected on all media in an active conference. “c” = the endpoint is in use and is fully-connected; however, the endpoint has changed conference audio or video capability or conference rate due to rate adaptation. This condition requires analysis of this endpoint’s capabilities and mode fields to identify reduced capability. “e” = the endpoint is in use but has capability problems. The endpoint lacks one of the required capabilities (Vid, Bhl, MLP) to fully participate. For MLP capabilities, see the “T120” field. This condition requires analysis of this endpoint’s capabilities and mode field to identify the missing capability. “f” = the endpoint is in use but not connected to all media. The endpoint declared all required capabilities (channel/video/ audio/data) but is not fully connected to all conference media. This endpoint may be connecting, failed to connect, or is not a valid video source. This condition requires analysis of this endpoint’s capabilities and mode fields to identify the problem. “n” = the endpoint disconnected during a conference or unsuccessfully attempted to connect to a conference. “blank” = the field is blank until the first call from or to the endpoint.
`Chl`	“y” = the endpoint has the required number of channels. “e” = the endpoint does not declare support for the correct number of channels and cannot participate fully in the conference. “n” = the endpoint declares the correct number of channels, but not all join the conference, due to a network or endpoint problem. “blank” = Audio add-on endpoints set the `Chl` field to blank.

`Aud`

“y” = the endpoint has the required audio capability. Audio add-on endpoints always set the Aud field to y when the endpoint joins the conference.

“c” = the endpoint is PCM only and it changes the conference video quality by changing the operating audio from G.728 to G.711. If administered audio modes are auto and the administered bandwidth is 112 kbps (56 k/channel) or 128 kbps (64 k/channel), the system initiates with the highest common audio, G.728. When the administered bandwidth is greater than 128 kbps, the system initiates with the highest common bandwidth, 7 kHz.

“e”= A PCM-only endpoint that could not support the administered audio mode, G.728 (such as a data conference), or G. 278/G.711 endpoint that could not support the administered audio mode, 7 kHz. Such endpoints operate with PCM audio and interwork with current operating audio modes.

blank = blank until the first call from or to the endpoint.

`Vid`

“y” = the endpoint has the required video capability and should be receiving video if the Chl, Aud, and Dat fields are y.

“c” = downgraded conference video quality from changing CIF to ACIF or by decreasing the frame rate. The conference video mode defaults to CIF If QCIF-only endpoints join the conference, the entire conference operates in QCIF, with downgraded video clarity. The conference frame rate is initially set to the highest frame rate that can be reduced by any endpoint. If the conference video mode is not administered with upgrade capability, the video parameters for a conference are “downgraded.” They are not “upgraded” until all endpoints disconnect from the conference.

“e” = the endpoint doe not declare video capability in its cap-set.

“n” = audio only, not receiving video, due to audio or data problems.

“blank” = Audio add-on endpoint defaults the Vid field to `blank`.

`Mlp`

Control Link to the ESM (T.120 stack terminator) status, the endpoint MLP data capability, and the state of the data connection in the T.120 stack. This field defaults to `blank`, indicating that the Data Mode for the conference is none.

`Gx`

“y” = This endpoint has Still Frame Graphics capability.

e = This endpoint does not have Still Frame Graphics capability. The conference retains still frame graphics capability when non-compliant endpoints join the conference.

blank = This endpoint never joined the conference.

`Rate Adpt`

Rate adaptation/Interworking indicator (`5`, `6`, `y`, `c`, `e`, `n`, `blank`). 5 and "6" apply to Low Speed/High Speed Interworking. All other values apply to Rate Adaptation.

"5" = 56-kbps (Low Speed) endpoint joins a High Speed (128 kbps or above) conference. This endpoint connects with audio only capability but is not a valid video source and destination.

"6" = 64-kbps (Low Speed) endpoint joins a High Speed (128 kbps or above) conference. This endpoint connects with audio only capability but is not a valid video source and destination.

"y" = Endpoint joins the conference at 64 kbps, but because rate adaptation to 56 kbps is triggered by another endpoint, this endpoint rate adapts to 56 kbps.

"c " = The administered conference bandwidth is 64 kbps. This endpoint joins the conference at 56 kbps. The first 56 kbps endpoint that joins 64 kbps rate adaptable conferences triggers rate adaptation (see `Join Time` below).

"n" = Another endpoint triggers a 64-kbps conference to rate adapt to 56 kbps. This endpoint joins the conference at 64 kbps, but encounters problems in rate adapting to 56 kbps. This endpoint may have audio and may be receiving video, but is not a valid video source.

"blank" Rate adaptation was not triggered by any endpoint. If this endpoint is in use and connected, it joins the conference at the administered bandwidth.

`Bond Mode`

BONDing Mode = blank for calls that are unrelated to bonding.

`Ts`

"t" = The endpoint detects voice energy (talking).

"m" = The endpoint indicates to the MCU that it is muted. It is possible for an endpoint to mute, but not send any indication to the MCU. In this situation the MCU does not display a mute indication.

"M" = UDD/CRCS Agent interface mutes the endpoint's audio. Both the endpoint and the UCC/CRCS Agent must mute the endpoint audio.

"S" = The solo-audio state set by UCC/CRCS Agents mutes the endpoint's audio. While in solo-audio state, new endpoints that join the conference automatically mute.

"blank" = Voice energy (talking) is not detected from the endpoint.

Vs

MCU endpoint video state (a, b, B, c, i, r, R, s, S, u, U, v, blank).

Quad-screen conferences = an * appears before the Vs value indicating that an endpoint belongs to the mixed image. # appears before Vs values indicating that an endpoint is set to be in the mixed image (via administration or UCC/CRCS Agent), but instead, `Fill` video displays in its place. This occurs when videos of an endpoint that are set in a quadrant cannot be used as a video sources, because the endpoint is not joined to the conference, suppresses its video, or has invalid video for its video source. Up to four endpoints may have an * or # before the Vs field value.

Quad-screen conferences in VAS mode = Mixed images broadcast to all endpoints.

Quad-screen conferences in presentation mode = Mixed images are return videos to the presenter.

Vs *(cont'd.)*

a = Applies to quad-screen conferences. *a indicates that an endpoint belongs to the mixed image and is administered to one of the quadrants, but is not currently connected (Fill image displays).

b = Applies to full-screen conferences. This endpoint's video broadcasts to other sites. This conference is in VAS, broadcast, or presentation mode. Quad-screen VAS conferences are prefix with an * indicating that this endpoint's video belongs to the mixed image. Quad-screen presentation conferences, (b without an asterisk) identify the presenter as the broadcaster.

B = The UCC roll call feature causes the endpoint's video to broadcast to other sites. The UCC roll call feature performs in full-screen mode.

"c" = This endpoint's video broadcasts to other sites. The conference is in chair mode and the chair designates the broadcaster. Chair features perform in full-screen mode.

"i" = The endpoint is not a valid video source. #i represents continuous presence conferences with endpoints that are set in particular quadrants.

"r" = For full-screen conferences, the endpoint's video is the return video to the broadcaster. For continuous presence conference in presentation mode, *r represents a VAS quadrant that belongs to the mixed image.

"R" = The UCC browse feature causes the endpoint's video to return video to the broadcaster. UCC Browse feature perform in full-screen mode.

"s" = The endpoint suppresses this endpoint's video. For continuous presence conference with fixed quadrant participants, #s represents endpoints that are fixed in a particular quadrant.

Vs
(cont'd)

"S" = UCC/CRCS Agent interface suppresses this endpoint's video. For continuous presence conference with fixed quadrant participants, #S represents endpoints that are fixed in a particular quadrant S displays when both the endpoint and the UCC/CRCS Agent suppress the endpoint video.

"u" = For full-screen conferences, this endpoint's video broadcasts to other sites. The conference is in VAS mode and the UCC/CRSCS Agent interface designates the broadcaster. For quad-screen conferences, UCC/CRCS Agents designate this endpoint as set in a quadrant. An *u represents endpoints that belong to the quad image, and #U represents disconnected endpoints.

"U" = For quad-screen conferences UCC/CRCS Agents designate quadrants as VAS. *U indicates that this endpoint belongs to the quad image.

"v" This endpoint's video broadcasts to other sites. The conference is in VAS mode but the endpoint asks to be a broadcaster with the "See-Me" request and is granted a MCV (Multipoint Command Visualize) token. The See-Me feature performs in full-screen mode.

"blank" = The endpoint's video is not broadcast, return, video, or part of the mixed-image, but it is a valid video source.

```
status conference                                                    page 2 of 2

                              STATUS OF CONFERENCE:

                    Sum Grp: Group1  Group2  Group3  Group 4
                         L1:
                         L2:

            Join    Drop    Drop    AC  --------Ports--------- Sum
      Ext   Time    Time   Reason   Num Trunk   Video  Aud/Esm Grp  Software
1:

2:

3:

4:

5:

6:
```

Screen 2-2. status conference: page 2 of 2

Field descriptions (status conference, page 2)

`Sum Grp`	The VD audio Level 1 (L1) and Level 2 (L2) summer group parts for each assigned group (1-4). Summer parts are assigned only for conferences with over 6 participants. When a conference operates at an audio mode of 7 kHz (administered audio mode is 7 kHz, or auto with the bandwidth greater than 128 kbps), the system allocates “primary” and “secondary” L1 and L2 summer parts. Primary and secondary parts are allocated as adjacent port slots on the same board. Status conferences display primary summer ports. Secondary summer ports are one slot higher than displayed primary summer ports.
`Join Time`	Time (in 24-hour notation) when the channel joins the conference.
`Drop Time`	Time (in 24-hour notation) when the channel disconnects. If the first channel has a drop time, the endpoint is inactive. If a drop time exists without a join time, the call disconnects without joining the conference.
`Drop Reason`	Channel’s disconnect because: “2-pri” = Administration errors cause mismatches in primary-secondary designation for cascade linking. This mismatch indicates that both MCUs are administered as primaries (see “Cascading” for a description of primary-secondary compatibility). “2-sec” = Administration errors cause mismatches in primary-secondary designation for a cascade link. This mismatch indicates that both MCUs are administered as secondaries (see “Cascading” for a description of primary-secondary compatibility). “Agent” = The reservation agent causes the call to disconnect. “Bandwidth” = A mismatch occurs between a call and the conference it attempts to join. “BondHshake” = Information channel parameters are unsupported or invalid, parameter negotiations terminate out of sequence, timers expire because secondary channels do not establish, or BONDing framing is undetected for one of the other channels. “Busy” = MCU detects that the conferee’s terminal equipment is busy. This drop reason is detected by ISDN cause values (for example h0). See “Dial-out” for a description of CPTR usage. “Chair” = Chair Command Disconnect (CCD) or Chair Command Kill (CCK) signals disconnects the endpoint. “Conf End” = The conference ends when it reaches the stop time for a reserved conference or an active conference converts to file.

`Drop Reason`
(cont'd)

Endpoint Clearing received from DS1. The endpoint causes the disconnect. The endpoint notifies the MCU that it intends to disconnect.

Far-end Clearing received from DS1. The network or endpoint cause the disconnect.

"Handshake" = Framing is not located or is lost for over 40 seconds and the endpoint disconnects. (The endpoint cannot complete initialization due to problems with finding Frame Alignment Signal (FAS), Multi Frame Alignment (MFA) and getting a corrected coded cap-set.)

"IDtimeout" = The H.320 sends three unsuccessful responses to the MCU regarding the UIN/password Query. Timeout periods exist for each period.

"Internal" = MCU cannot allocate the necessary trunk resources to route the dial-out call for the specified dial-numbers. This problem can be associated with routing patterns or trunk associated translations, or it can indicate insufficient trunk resources.

"Network" = Clearing received from DS1. The network causes the disconnect. The endpoint with disconnect notification capability disconnects without notifying the MCU.

"Not-MCU" = The dial-out destination number(s) of the "CAS" extension terminates to a number that is not a dial-in cascade MCU extension.

"No-ring" = Calls are up for 30 seconds without ringing.

"Reorder" = The MCU CPTR resources detects that no network trunks are available to place the call. See "Dial-out" for a description of CPTR usage.

`Drop Reason` *(cont'd)*

"Pre-AnsDrop" = The call disconnects before an endpoint answers. The network, an endpoint, or a terminal adapter may cause the disconnect. This drop reason differs from 'No-answer,' which indicates that a 60-second timeout occurs during alerting. In this case, the call drops before the 60-second timer expires. Some busy endpoints connected through terminal adapters display this behavior.

"Resource" = MCU cannot provide resources (VC or MMI) when the call arrives or loses the resources during the call. This can occur when they are Out of Service, busied out by craft, or in use by system maintenance. This drop reason can also occur if the DS1/MMI cable disconnects. If a resource problem exists when the call arrives, it gets a reorder (fast busy) and the MCU does not disconnected it.

"Password" =The user entered a wrong password or the audio add-on user did not enter it within the specified time period. The audio add-on user has one attempt to enter a correct password and has about 10 seconds between digits (inter-digit timing).

"System" = MCU restarts (level 2) disconnect all calls.

"UIN-Inv" The user enters an invalid User Identification Number.

"Unknown" = The system cannot determine the disconnect cause.

"Wrong Num" The MCPTR resources SDN cause value detects an incorrectly-dialed destination number. See "Dial-out" for details.

"UCC" = The controller intentionally disconnects the endpoint.

`AC Num` Administered Connection Number. (1–128) AC numbers further diagnose problems by combining status conference information with the **status administered connection** command, and data stored in error and alarm logs.

`Ports Trunk` The data endpoint used by the channel.

`Ports Video` The MMI port for the channel.

`Ports Aud` If the endpoint type is not "UCC," the VC audio encoder port (which is always paired to a decoder port) for the channel (only the first channel). appears together with the ESM data port in the endpoint's channel 1 port slot position of the `Port Aud/ESM` column. For "UCC" endpoints, channel 1 port slot positions display allocated Call Classifier resources.

`Ports ESM` Expansion Service Module MMI data port. This field defaults to blank.

`Sum Grp` Endpoint's assigned summer group number. The summer group port assignments are on screen 1.

`software` For Lucent Technologies use only.

Field descriptions (status conference endpoint)

The **status conference *x* endpoint *y*** command specifies that the conference is found. Data relevant for each endpoint displays in 6 pages. If technicians use the endpoint-ID **all**, every specified endpoint displays.

Page 1 - Status Conference Endpoint

```
status conference endpoint                                          page 1 of 6
              STATUS OF CONFERENCE ___   ENDPOINT: __            Status: ________
Ext: _____  Type: ____       Manufacturer/Country: ____/____   Product: _____
   Terminal Name: _______________       Data Mode: _________  MLP Rate: ____
 Admin Bandwidth: ____                                  Rate Adaptation: _
  Conf Bandwidth: ____                                Lo/Hi Interworking: _
  Meet-Me Number: ____________________       Dial Out #1: ______________________
  Sum Grp: _  L1: ______  L2: ______                  #2: ______________________
      Quadrature: ______ ________


                     ENDPOINT STATES/CAPABILITIES/MODES
                In  Enh  ----Capability---- Rate Bond
                Use BAS  Chl Aud Vid Mlp Gx Adpt Mode  Ts Vs
                 -   -    -   -   -   -  -    -   -    -   -


Help line
enter command:
```

Screen 2-3. Page 1 of 6: status conference x endpoint y

Field descriptions

`Endpoint`	Slot number associated with the endpoint on the conference forms.
`Product`	Product identification number obtained from the endpoint.
`Manufacturer/ Country`	Manufacturer identification number and manufacturer's country code obtained from the endpoint.
`Terminal Name`	Blank.
`Sum Grp`	Endpoints belong to this Summer group number and the VC Audio Level (L1) and Level 2 (L2) summer ports for this group. These fields supply entries for conferences with over 6 participants.
`Dial Out #1`	Blank
`Dial Out #2`	Blank

`In Use`

Is the endpoint participating in the conference or connecting to the conference? - `y`, `c`, `e`, `f`, `n`, `blank`.

“y” = The endpoint is in use and fully-connected on all media in an active conference.

“c” = The endpoint is in use and fully-connected; however, the endpoint changes the conference audio or video capability, or the rate of the conference due to rate adaptation. This condition requires analysis of this endpoint’s capabilities and mode fields to identify the reduced capability.

“e” = The endpoint active, but has capability problems. The endpoint lacks one of the required capabilities (Vid, Bhl, MLP) to be a full participant. For MLP capabilities, see the “T120” field. This condition requires analysis of this endpoint’s capabilities and mode field to identify the missing capability.

“f” = The endpoint is active, but is not connected to all media. The endpoint declared all required capabilities (channel/video/audio/data) but is not fully-connected to all conference media. This endpoint may be connecting, failed to connect, or is not a valid video source. This condition requires analysis of this endpoint’s capabilities and mode fields to identify the problem.

“n” = The endpoint connects then disconnects in a conference, or unsuccessfully attempts to connect to a conference.

“blank” = Blank until the first call is made from or to the endpoint.

`Enh BAS`

Enhanced Basic Service Flag - `n`, `y`

“y” = The endpoint supports the enhanced BAS commands/caps;
“n” = The endpoint supports the basic BAS commands/caps.

`Chl`

Data on the quantify and quality of channels (transfer rate)? - `y`, `e`, `n`, `blank`

“y” = The endpoint has the required number of channels.

“e” = The endpoint does not declare support for the correct number of channels and cannot participate fully in the conference.

“n” = The endpoint declares the correct number of channels, but not all channels join the conference, due to network or endpoint problems.

“blank” = Audio add-on endpoints set the `Chl` field to `blank`.

`Aud` Does it have the required audio capability? - `y`, `c`, `e`, `blank`

“y” = The endpoint has the required audio capability. Audio add-on endpoints set the Aud field y when the endpoint joins the conference.

“c” = This PCM-only endpoint changes conference video quality by changing the operating audio from G.728 to G.711. If the administered audio mode is auto and the administered bandwidth is 112 kbps (56 k/channel) or 128 kbps (64 k/channel), the system begins with the highest common audio, G.728. When the administered bandwidth is greater than 128 kbps, the system begins with the highest common bandwidth, 7 kHz.

“e” = A PCM-only endpoint that could not support the administered audio mode, G.728 (such as a data conference), or G. 278/G.711 endpoint that could not support the administered audio mode, 7 kHz. Such endpoints operate with PCM audio and interwork with operating audio modes.

“blank” = Blank until the first call is made from or to the endpoint.

`Vid` Does it have required video capability and is it receiving video? - `y`, `c`, `e`, `n`, `blank`

“y” = The endpoint has the required video capability and receives video if the Chl, Aud, and Dat fields are `y`.

“c” = The endpoint downgrades the conference’s video quality from CIF to ACIF, or by decreasing the frame rate. The conference video mode defaults to CIF, and if a QCIF-only endpoint joins the conference, the entire conference operates in QCIF, with downgraded video clarity. The conference frame rate is initially set to the highest frame rate that can be reduced by any endpoint. If the conference video mode is not administered with upgrade capability, the video parameters for a conference downgrade. They do not upgraded until all endpoints disconnect from the conference.

“e” = The endpoint does not declare video capability in its cap-set.

“n” = Audio only, not receiving video, due to an audio or data problem.

“blank” = Audio add-on endpoints set the Vid field to `blank`.

`Mlp` The relationship between the Control Link and the ESM (T.120 stack terminator), the endpoint MLP data capability, and the state of the data connection in the T.120 stack. This field defaults to `blank`, indicating that the Data Mode for the conference is `none`.

`Gx` “y” This endpoint has Still Frame Graphics capability.

“e” = This endpoint did not have Still Frame Graphics capability. The conference retains still frame graphics capability when a non-compliant endpoint joins the conference.

“blank” = This endpoint never joins the conference.

`Rate Adpt`

Rate adaptation/Interworking indicator = `5`, `6`, `y`, `c`, `e`, `n`, `blank`. 5 and 6 apply to Low Speed/High Speed Interworking. All other values apply to Rate Adaptation.

“5”= 56-kbps (Low Speed) endpoints join High Speed (128 kbps or above) conferences. This endpoint connects with audio only capability, but is not a valid video source and destination.

“6” = 64-kbps (Low Speed) endpoints join High Speed (128 kbps or above) conferences. This endpoint connects with audio only capability, but is not a valid video source and destination.

“y” = This endpoint joins the conference at 64 kbps, but because another endpoint triggers rate adaptation to 56 kbps, this endpoint rate adapts to 56 kbps.

“c” = 64 kbps endpoints join the conference at 56 kbps. The first 56 kbps endpoint that joins 64 kbps rate adaptable conferences triggers rate adaptation (see `Join Time` below).

“n” = Another endpoint triggers a 64-kbps conferences to rate adapt to 56 kbps. This endpoint joins the conference at 64 kbps, but encounters problems with rate adapting to 56 kbps. This endpoint may have audio and may be receiving video, but is not a valid video source.

“blank” = No endpoint triggers rate adaptation. If this endpoint is active, it joins the conference at the administered bandwidth.

`Bond Mode`

BONDing Mode - blank. This field is blank for calls that are not related to bonding.

`Ts`

The talking state of the endpoint - `t`, `m`, `M`, `S`, `blank`.

“t” = The endpoint detects voice energy (talking).

“m” = The endpoint indicates that it is muted to the MCU. Endpoints may mute, but not send an indication to the MCU.

“M” = UDD/CRCS Agent interface mutes the endpoint’s audio. M displays when both the endpoint and the UCC/CRCS Agent mute the endpoint audio.

“S” = the solo-audio state set by UCC/CRCS Agent mutes the endpoint’s audio. While in solo-audio state, new endpoints joining the conference automatically mute.

“blank” = The endpoint does not detect voice energy (talking).

Vs

The MCU video state for this endpoint. a, b, B, c, i, r, R, s, S, u, U, v, blank.

Quad-screen conferences = * appears before V values indicating that an endpoint belongs to the mixed image. A # appears before the V values indicating that an endpoint belongs to the mixed image (by administration or UCC/CRCS Agent). Instead, a `Fill` video displays in its place. This occurs when an endpoint's video that is set in a quadrant cannot be used as a video source because the endpoint is not connected to the conference, suppresses its video, or has invalid video for its video source. Up to four endpoints have an * or # before the Vs field value.

Quad-screen conference in VAS mode = The mixed image broadcasts to all endpoints. For quad-screen conference in presentation mode, the mixed image is return video to the presenter.

"a" = This value applies to quad-screen conferences. *a indicates that an endpoint belongs to the current mixed image and is administered to one of the quadrants. *a indicates that the endpoint is fixed in a quadrant, but is not currently connected (Fill image displays).

"b" = For full-screen conferences, this endpoint's video broadcasts to other sites. This conference is in VAS, broadcast, or presentation mode. For quad-screen VAS conference are prefixed an asterisk indicating that this endpoint's video is part of the mixed image because of VAS. For quad-screen presentation conferences, b identifies the presenter as the broadcaster.

"B" = The UCC roll call feature causes the endpoint's video to broadcast to other sites. The UCC roll call feature performs in full-screen mode.

"c" = This endpoint's video broadcasts to other sites. The conference was in chair mode and the chair designates the broadcaster. Chair features perform in full-screen mode.

Vs
(cont'd.)

"i" = The endpoint is not a valid video source. For continuous presence conference, #i represents endpoints that are is fixed in a particular quadrant.

"r" For full-screen conferences, t he endpoint's video is the return video to the broadcaster. For continuous presence conferences in presentation mode, *r represents a VAS quadrant that is part of the mixed image.

"R" = The UCC browse feature causes the endpoint's video to be the return video to the broadcaster. UCC Browse feature performs in full-screen mode.

"s" = The endpoint suppresses its video. For continuous presence conferences with fixed quadrant participants, #s represents an endpoint that is fixed in a particular quadrant.

"S" = UCC/CRCS Agent interface suppresses the endpoint's video. For continuous presence conference with fixed quadrant participants, #s represents an endpoint that is fixed in a particular quadrant. S displays when both the endpoint and the UCC/CRCS Agent suppress the endpoint video.

"u" = For full-screen conferences, this endpoint's video broadcasts to other sites. The conference is in VAS mode and the UCC/CRSCS Agent interface designates the broadcaster. For quad-screen conferences, the UCC/CRCS Agent designates this endpoint as fixed in a quadrant. *u represents an endpoint that is part of the quad image, and #u represents a disconnected endpoint.

"U" = For quad-screen conferences, UCC/CRCS Agents designate a quadrant as VAS. *U indicates that this endpoint is part of the current quad image.

"v" = This endpoint's video broadcasts to other sites. The conference was in VAS mode, but the endpoint asks to be a broadcaster with the "See-Me" request and is granted a MCV (Multipoint Command Visualize) token. The See-Me feature performs in full-screen mode.

"blank" = The endpoint's video is not broadcast, return, video, or part of the mixed-image, but it is a valid video source.

Page 2 - Endpoint Channel Information

This section describes fields specific to endpoint-level command output.

```
status conference endpoint                                          page 2 of 6

                          ENDPOINT CHANNEL INFORMATION

Chan. Join  Drop  ----Drop----  AC  ------------Ports----------  Fr
 No.  Time  Time  Reason  Code  Num Trunk  Video Aud/ESM BONDng  Err Software
  1:  _____ _____ _________ __  ___ ______ ______ ______ ______  ___ ________
  2:  _____ _____ _________ __  ___ ______ ______ ______ ______  ___ ________
  3:  _____ _____ _________ __  ___ ______ ______        ______  ___ ________
  4:  _____ _____ _________ __  ___ ______ ______        ______  ___ ________
  5:  _____ _____ _________ __  ___ ______ ______        ______  ___ ________
  6:  _____ _____ _________ __  ___ ______ ______        ______  ___ ________
  7:  _____ _____ _________ __  ___ ______ ______        ______  ___ ________
  8:  _____ _____ _________ __  ___ ______ ______        ______  ___ ________
  9:  _____ _____ _________ __  ___ ______ ______        ______  ___ ________
 10:  _____ _____ _________ __  ___ ______ ______        ______  ___ ________
 11:  _____ _____ _________ __  ___ ______ ______        ______  ___ ________
 12:  _____ _____ _________ __  ___ ______ ______        ______  ___ ________

Help line
enter command:
```

Screen 2-4. Page 2 of 6: status conference *x* endpoint *y*

Field descriptions

`Join Time`	Time (in 24-hour notation) when the channel joins the conference.
`Drop Time`	Time (in 24-hour notation) when the channel disconnects. If the first channel has a drop time, the endpoint is inactive. If a drop time occurs without a join time, the call disconnects without joining the conference.

`Drop Reason` Channels disconnect because:

“2-pri” = Administration errors cause mismatches in primary-secondary designations for cascade links. This mismatch indicates that both MCUs are administered as primaries (see “Cascading” for a description of primary-secondary compatibility).

“2-sec” = Administration errors cause mismatches in primary-secondary designations for cascade links. This mismatch shows that both MCUs are administered as secondaries (see “Cascading” for a description of primary-secondary compatibility).

“Agent” = Reservation agents cause calls to disconnect (for example, agents change connected dial-out destination numbers).

“Bandwidth” = Mismatches occur when bandwidths of calls and the conferences they attempt to join are inconsistent.

“BondHshake” = Unsupported Information channel parameters or invalid, parameter negotiations that terminate out of sequence, timers that expire because secondary channels do not establish, or BONDing framing that goes undetected for another channels.

“Busy” = The MCU detects that the conferee’s terminal equipment is busy. An ISDN cause value detects this drop reason (for example h0). See “Dial-out” for a description of CPTR usage.

“Chair” = Chair Command Disconnect (CCD) or Chair Command Kill (CCK) signals disconnect the endpoint.

“Conf End” = The conference ends when the stop time is reached for a reserved conference or an active conference converts to file.

`Drop Reason`
(cont'd)

"Endpoint" = Clearing received from DS1. The endpoint initiates the disconnect. The endpoint notifies the MCU that it intends to disconnect.

"Far-end" = Clearing received from DS1. The network or endpoint initiate the disconnect.

"Handshake" = Framing is never found or is lost for over 40 seconds and the endpoint is disconnected. (the endpoint could not complete initialization due to problems with finding Frame Alignment Signal (FAS), Multi Frame Alignment (MFA) and corrected coded cap-sets)

"IDtimeout" = The H3.20 user unsuccessfully (three times) sends MCU responses regarding the UIN/password Query. Each timeout period is administered.

"Internal" = MCU has a problem allocating the necessary trunk resources to route dial-out calls for specified dial-numbers. This problem is associated with routing patterns or trunk-associated translation (for example, TAC specified in the dial-out number or routing pattern points to a trunk group without members), or indicates a lack of trunk resources (for example, all trunk members are maintenance busy or all in-service members are busy on a call).

"Network" = Clearing received from DS1. The disconnects the endpoint. The endpoint with the disconnect notification capability disconnects without notifying the MCU.

"Not-MCU" = The dial-out destination numbers of the "CAS" extensions terminate to numbers that are not dial-in cascade MCU extensions.

"No-ring" = The is up for 30 seconds and no ringing is detected.

"Reorder" The MCU CPTR resources detect that no network trunks are available to place the call. See "Dial-out" for a description of CPTR usage.

`Drop Reason` *(cont'd)*	"Pre-AnsDrop" = The call disconnects an endpoint answers. The network, an endpoint, or a terminal adapter may cause the disconnect. This drop reason differs from 'No-answer,' which indicates that a 60-second timeout occurs during alerting. In this case, the call drops before the 60-second timer expires. Some busy endpoints that are connected through terminal adapters display this behavior. "Resource" = MCU cannot provide resources (VC or MMI) when calls arrive or lose their resources during the call. Calls can lose resources when they are Out of Service, busied out by craft, or in use by system maintenance. If the DS1/MMI cable is disconnected, this drop reason can also occur. If a resource problem exists when the call arrives, it gets reorder (fast busy) and is not disconnected by the MCU. "Password" = The user enters a wrong password or the audio add-on user does not enter it within the specified time period. The audio add-on user gets one attempt to enter a correct password and has about 10 seconds between digits (inter-digit timing). "System" = MCU restarts (level 2) disconnect all calls. "UIN-Inv" = Users enter invalid User Identification Numbers. "Unknown" = The system cannot determine the disconnect cause. "Wrong-num" = The MCU CPTR resources SDN cause values detect an incorrectly-dialed destination number. See "Dial-out" for details. "UCC" = The controller intentionally disconnects the endpoint.
`Drop Code`	A detail code complementing the Drop Reason. Additional bonding-related information is available from the supplementary BONDing Drop Codes described above.
`AC Num`	Administered Connection Numbers. (1–128) AC numbers can further diagnose problems by combining status conference information with the **status administered connection** command, and data stored in the error and alarm logs.
`Ports Trunk`	The data endpoint that the channel is using.
`Ports Video`	The MMI port for the channel.
`Ports Aud`	If the endpoint type is not "UCC," the VC audio encoder port (which is always paired to a decoder port) for the channel (only the first channel). appears together with the ESM data port in the endpoint's channel 1 port slot position of the `Port Aud/ESM` column. For "UCC" endpoints, the channel 1 port slot position displays allocated Call Classifier resources.
`Ports ESM`	Expansion Service Module MMI data port. This field is always blank.
`Ports BONDng`	The MMI port used for channel BONDing.
`Fr Err`	Frame error counter. A circular hex counter (0-FF) to indicates framing error occurrences.

Page 3 - Conference Information

This section describes fields that are specific to endpoint-level command output.

```
status conference endpoint                                          page 3 of 6

CONFERENCE INFO:  Broadcaster: xx (See-Me)
                   Return Vid: xx

---------- MODE COMMANDS/COMMUNICATION MODES ------|  EPT MISC   | ------- FAW --
 CMD  STAT    CONF         EPT-IN        EPT-OUT   |------ I  O  |       CH1 CH2
----- ---- ------------ ------------- -------------|  AIM: y  n  |       --- ---
XRATE: y   384          384           384          |  VIS  y  n  | A-OUT:  y   n
AUDIO: n   G728         neutral       G728         |  MIS:    n  |  A-IN:  y   n
56/64: y   derestrict   derestrict    derestrict   |  MCV: n     | M-FRM:  y   n
VIDEO: n   H.261        H.261         H.261        |-------------|   MFA:  y   n
  MLP: y   MLP-off      MLP-off       MLP-off      | TALK: y 05  |   MFN:  y   n
H-MLP: y   H-MLP-off    H-MLP-off     H-MLP-off    | VFCV: y 01  |   FAS:  y   n
  LSD: y   LSD-off      LSD-off       LSD-off      | BCTK: n 02  |MCUFAL: 00  00
  HSD: y   HSD-off      HSD-off       HSD-off      | RTTK: y 01  | FEFAL: 00  00
CRYPT: y   encrypt-off  encrypt-off   encrypt-off  | BCLS: n     |
  S/M: y   N-comp-6B-H0 N-comp-6B-H0  N-comp-6B-H0 | RTLS: n     |
                                                   | HYPR: n 00  |
                                                   |DMUTE: n 00  |
                                                   |H.261: n 00  |
                                                   | VFMT: n 00  |


Help line
enter command:
```

Screen 2-5. Page 3 of 6: status conference *x* endpoint *y*

Conference Info. This information primarily applies to full-screen conferences. The `Broadcaster` field applies to quad-screen presentation mode conferences.

Field descriptions

`Broadcaster` The current broadcaster endpoint number. The following keywords qualify the broadcaster:

“Broadcast” = A broadcast mode broadcaster.

“Chair” = The chair designates the broadcaster.

“See-Me” = The endpoint initiates a MCV broadcaster request.

“Presenter” = A presentation mode broadcaster.

“Rollcall” = The UCC designates the broadcaster by the Rollcall feature.

“UCC” = The UCC designates the broadcaster.

“VAS” = A Voice Activated Switching broadcaster.

Next Broadcaster	The endpoint number that is selected to be the next broadcaster.
Return Vid	The endpoint number that is the current return video. The return video is qualified with the following keywords: “blank” = VAS, Chair action, UCC action, or endpoint MCV requests force the previous broadcaster to be the return video. The broadcaster qualifier identifies the action that forced this endpoint to become return video. “Autoscan” = Auto scan return video, when conference mode broadcasts with auto scan. “Browse” = The UCC designates the return video with the Browse feature. “VAS” = A Voice Activated Switching return video.
Next Return Vid	Indicates the endpoint number selected to be the next return video.

Mode Commands/Communication Modes. This is a collection of incoming and outgoing bandwidth allocations for the multiplex. The Incoming data is the rate at which the MCU thinks the endpoint is communicating based on the Bit-rate Allocation Signal (BAS) codes received from the endpoint/codec and the capabilities the MCU has declared. The Outgoing data is the rate from the MCU toward the endpoint. The following are column definitions for this section of page 3.

Field descriptions

CONF	The desired conference operating mode. This may differ from the endpoint in (EPT-IN) or endpoint out (EPT-OUT) modes.
CMD	Labels for the various types of mode commands
STAT	Conference and incoming mode compatibility. “y” = mode compatibility “n” = modes incompatibility.
EPT-IN	defines the communication modes coming in from an endpoint.
EPT-OUT	Defines the communication modes sent to an endpoint based on the number of connected channels and the endpoint’s capabilities.

The following are field definitions for the Mode Commands/Communication Modes section of Page 3.

XRATE	One of the supported rates in Table 2-3:

Table 2-3. Supported Transfer Rates s

XRATE	Bandwidth of the Call
2x64	2B (2x56 or 2x64)
128	112kbps or 128kbps
196	168kbps or 196kbps
256	224kbps or 256kbps
320	280kbps or 320kbps
384	336kbps or 384kbps
512	512kbps
768	768kbps
1472	1472kbps
1536	1536kbps‘
1920	1920kbps

XRATE
(cont'd.)

XRATE may be 64 when the endpoint dials in, or in the event that problems occur. It implies that only one B channel is in use.

`AUDIO`

Conference and endpoint Audio rates (kbps bandwidth) must be the same. Their modes are not necessarily the same. When the audio rate of the conference and the endpoint differ, the endpoint's audio interworks, but the endpoint's video is invalid. MCU may or may not send video to such an endpoint.

Table 2-4 summarizes expected endpoint audio modes with different transfer rate configurations, facility bandwidths, and conference modes. It includes endpoints that support the highest common audio mode (HC audio) when the administered mode is `auto`. The highest common conference mode depends on the administered bandwidth. A '-' in the table indicates 'does not apply.'

Table 2-4. Audio Mode Configurations

Admin Mode (HC Audio)	All Support HC Audio	Xfer Rate	Facility BW	Conf Mode	Expected Endpoint Mode
auto (G.728)	yes	<=128k	-	G.728	G.728
auto (G.728)	no	<=128k	64k	G.711-A-56k	G.711-A-56k B.711-Mu-56k

Continued on next page

Table 2-4. Audio Mode Configurations — *Continued*

Admin Mode (HC Audio)	All Support HC Audio	Xfer Rate	Facility BW	Conf Mode	Expected Endpoint Mode
auto (G.728)	no	<=128k	56k	G.711-A-48k	G.711-A-48k G.711-MU-48k
auto (G.722)	-	>128k	64k	G.722-56k	G.722-56k G.711-A-56k G.711-Mu-56k
auto (G.722)	-	>128k	56k	G.722-48k	G.722-48k G.711-A-48k G.711-Mu-48k
G.728	-	-		G.728	G.728
G.711	-	-	64k	G.711-A-56k	G.711-A-56k G.711-Mu-56k
G.711	-	-	56k	G.711-A-48k	G.711-A-48k G.711-Mu-48k
G.722	-	-	64k	G.722-56k	G.722-56k G.711-A-56k G.711-mu-56k
G.722	-	-	56k	G.722-48k	G.722-48k G.711-A-48k G.711-Mu-48k

`AUDIO` *(cont'd.)*

Other possible AUDIO mode values include `neutral` (neutralized I-channel), `Au-off,` and `Frm` (no audio signal) which never match conference modes and are unsupported by MCU.

`56/64`

The `65/64` field derestricts when operating at 64kbps, 128kbps, 192kbps, 256kbps, 320kbps, 384kbps, 512kbps, 768 kbps, 1472kbps, 1536kbps, or 1920kbps per channel speeds; it `restricts` when operating at 56kbps, 112kbps, 168kbps, 224kbps, 280kbps, 336kbps, 448kbps, and 672kbps per channel speeds.

If technicians configure the conference for Nx56kbs operations, endpoint may signal by capabilities or modes that operate at the proper rate. In such a case, when technicians receive `derestrict` commands while they are in the `restrict` mode, that do not match conference communication modes, (`MISC` capability has `restrict` displayed on Page 4) the `STAT 56/64` is y indicating 56/64 compatibility between the conference and the endpoint.

`VIDEO`

The Video mode: `H.261` (recommended), `H.CTX` (proprietary), `H.CTX+` (proprietary), or `SG4` (proprietary) indicate that video is on in the direction indicated; `and video-off` when the video is off.

`MLP`

Multi Layer Protocol data mode. When technicians administer `Data Modes` as `any-mlp` or `ww-pcs`, MLP modes should be `var-MLP`. Other values affect video status.

`MLP` modes should be `MLP-off` when technicians administer Data Modes as `none`. Other values in this mode affect video status.

`H_MLP`

The High Speed MLP mode. The HMLP mode should be `H-MLP-off`. Other values in this mode will affect video status.

`LSD` Low Speed Data mode. The LSD mode should be `LSD-off`. Other values in this mode affect video status.

`HSD` High Speed Data mode. The HSD mode should be `HSD-off`. Other values in this mode affect video status.

`CRYPT` Encryption mode. The CRYPT mode should be `encrypt-off`. Other values in this mode affect video status.

`S/M` Single/Multi channel interoperability mode. `6B-H0-comp` indicates that the sender is interoperating multiple channels and a single channel (for example, 6B and H0). `Not-comp-6B-H0` indicates that the sender is not interoperating between 6B and H0. Normally this value is `Not-comp-6B-H0`. Other values in this mode affect video status.

Endpoint Miscellaneous (EPT MISC) Information. EPT MISC contains miscellaneous states and counters for an endpoint. Flags can y or n. Counters start with 0x00, increment to 0xff, and wrap around to 0x01. `AIM` and `VIS` are BAS commands that can be sent as input to MCU from an endpoint or as output from MCU to an endpoint

Field descriptions

`AIM` Audio Indicate Mutes.

“y” = For input, this endpoint mutes its audio. MCU does not VAS to an endpoint displaying mute. For output, all other endpoints in the conference mute their audio (have sent AIM to MCU). MCU in turn tells this endpoint (by sending it AIM) that there is no audio output from MCU.
“n” = For input, this endpoint does not mute (only if endpoint audio mode is turned on). For output, an audio path opens across the bridge.

`VIS` Video Indicate Suppressed.

“y” = For input, this endpoint suppresses its video (video is muted). For output, the MCU is not sending video to this endpoint because there is no video broadcaster (broadcaster does not join or broadcaster’s video is invalid).

`MIS` Multipoint Indicate Secondary-status.

“n” = For output, the endpoint is a valid source (not necessarily at this moment). n is the correct state for the video.
“y” = MIS was sent to an endpoint considered to be a secondary endpoint. The endpoint is included in the audio, but not video portion of the conference. Video is not sent.

`MCV` Multipoint Command Visualize.

“y” = For input, an endpoint requests to become a broadcaster. This is used during Still Frame Graphics and to force “presentation” mode.

TALK	“y” = The VC board detects voice energy from the endpoint. The TALK counter indicates the number of starts or stops.
VRCV	“y” = The endpoint is receiving video (MCU is sending video to the endpoint). The VRCV counter counts the number of times video sends or does not send to this endpoint.
BCTK	Single screen and quad-screen presentation mode conferences. “y” = The endpoint is the video broadcast source. The BCTK counter tallies the number of times this endpoint is the video broadcast source.
RTTK	Single screen conferences. “y” = The endpoint is the return video source. The RTTK counter tallies the number of times this endpoint is the return video source.
BCLS	Single and quad-screen presentation mode conferences. “y” = The endpoint is watching the video of the broadcast source.
RTLS	Single screen conferences. “y” = The endpoint is watching the video of the return source.
HYPR	“y” = Endpoint hyperactivity (MCU isolates endpoints from the MMCH conference due to “thrashing” behavior) affects the endpoint’s status as a video source (for 5 seconds of hyperactivity timer). The HYPR counter tallies the number of times this endpoint is hyperactive.
DMUTE	“y” = The VC board or the software in the MCU mute the decoder. VC boards mutes the decoder when it loses MMI or endpoint framing, when it receives invalid audio code words, and when endpoints are hyperactive. MCU software mutes the endpoint decoder of all endpoints besides the broadcaster. (when a mode of a conference is “broadcastw/scan”,broadcast with auto scan) The DMUTE counter tallies the number of times the VC board mutes this endpoint’s decoder.
VFMT	Quad-screen conferences. This field always defaults to n, indicating QCIF format.
H.261	“y” = Video framing loss. The H.261 counter tallies the number of times framing is lost.

Frame Alignment Word (FAW) Information. The FAW section of page 3 provides channel Frame Alignment Word information for the communication paths labeled CHL 1 and 2. For 2B calls, both CHL 1 and 2 are used. For 1-channel calls (112,bps, 128kbps, 168kbps, 196kbps, 224kbps, 256kbps, 280kbps, 320kbps, 336kbps, 384kbps, 768kbps, 1472kbps, 1536kbps, and 1920kbps) only CHL 1 is used. A-OUT, A-IN, M-FRM, MFA, and MFN are flags with y or n.

Field descriptions

A-OUT	MCU has endpoint framing.

`A-IN`	Endpoint has MCU framing
`M-FRM`	Multichannel frame alignment of both channels in 2B is present.
`MFA`	Multiframe alignment word is present (required in 2B call).
`MFN`	Multiframe numbering is present (required in 2B call).
`FAS`	Frame Alignment Signal (FAS) channel number (1 or 2). This number should match the column header.
`MCUFAL`	MCU Frame Alignment Loss (MCUFAL). Counts the number of times the MCU reports lost endpoint FAW or multichannel synchronization (M-FRM) to the endpoint. The MCU a-bit toggles when the MCU gains or loses endpoint multichannel synchronization. This counter starts with 0x00, increments to 0xff, then wraps around to 0x01. The MCUFAL count also displays in the `Fr Err` field on Page 2
`FEFAL`	Far End Frame Alignment Loss (FEFAL). Counts of the number of changes the MCU detects in the endpoint's a-bit (A-OUT). The endpoint a-bit toggles when an endpoint gains or loses MCU framing. This counter starts with 0x00, increments to 0xff, then wraps around to 0x01.

Page 4 - Endpoint Capability Information

This section describes fields specific to endpoint-level command output.

```
status conference endpoint                                          page 4 of 6

                       ENDPOINT CAPABILITY INFORMATION
-------------------------------------------------------------------------------
 VID | vfmt: QCIF   cmpi: 30       H.CTX      SG4     imp
     | da_sfg       qmpi: 7.5      H.CTX+     SG4_sfg
-----|-------------------------------------------------------------------------
MISC | derestrict   S/M  mbe  dcomp     cic
-----|-------------------------------------------------------------------------
  XR | 64 64x2 64x3 64x4 64x5 64x6      384   384x2   384x3   384x4   384x5
     |    128  192  256  320  512  768  1152  1472    1536    1920
-----|-------------------------------------------------------------------------
 AUD | ntrl    711m 711a g728 g722_64   g722_48
-----|-------------------------------------------------------------------------
 LSD | var 300 1200 4800 6400 8000 9600 14.4k 16k 24k 32k 40k 48k 56k 62.4k 64k
-----|-------------------------------------------------------------------------
 HSD | var 64k 128k 192k 256k 320k 348k 512k  768k 1152k  1536k
-----|-------------------------------------------------------------------------
 MLP | var 4k 6.4k 14.4k 16k  22.4k 24k 30.4k 32k  38.4k  40k 46.4k   62.4k
-----|-------------------------------------------------------------------------
HMLP | var 62.4k    68k  128k 192k 256k 320k  384k
-------------------------------------------------------------------------------
```

Screen 2-6. Page 4 of 6: status conference *x* endpoint *y*

Endpoint Capability Information. Fields on this page display if an endpoint declares specific capability. For example, if an endpoint does not declare VID H.CTX capability, the `H.CTX` field does not display.

Field descriptions

`VID`

Video and frame rate types that the endpoint supports.

"vfmt" = Does not display if the endpoint has no video capability. All values are blank if an active call or audio-only endpoint exists. Otherwise, values for this field include:

- `FCIF` for full CIF
- `QCIF` for quarter CIF. CIF support implies QCIF support. For larger screens, CIF typically displays sharper resolution video, ZCIF is blocked, but may run at higher frame rates with less clarity. Differences are less observable on very small displays.
- `cfps` and `qfps` are maximum frame rates (frames/second) that the endpoint can receive video for CIF and QCIF operating modes. CIF frame rate values are 30fps, 15fps, 10fps, and 7.4fps. If the endpoint does not support CIF (that is, the vfmt field is QCIF), the `cfps` value should be blank.
- `da_sfg` indicates support for H.261 Still Frame Graphics transfers.
- `H.CTX`, `H.CTX+` and `SG4` are proprietary video format capabilities.
- `SG4_sfg` indicates support for SG4 Still Frame Graphics

`MISC`

The `restrict` field and the `56/64` command mode with a `restrict` value indicate that endpoints operate at 56 kbps per channel. Endpoints on 56 kbps conferences must send one or both 2 indications that they are operating at 56 kbps before they become a video source in a 56 kbps conference. If they signal that they are operating at 56 kbps in a 64 kbps or 384 kbps conference, they become an audio-only source, but the MCU continues to send Selected Communication Mode (SCM) toward them when possible.

A MISC capability of `derestrict` and a 56/64 command of `derestrict` together indicate that an endpoint operates at 64 kbps. If either is `restrict`, the conference operates at 56 kbps. Other field values include:

- `dcomp` indicates support for WorldWorx PCS data compliance.
- `mbe` indicates support for Multi Byte Extension. MBE exchanges passwords, terminal names, and other special capabilities, such as, WorldWorx PCS specific features support.
- `cic` (Chair Indicate Capability) indicates chair control capability.

XR	Transfer rate capabilities. Endpoint speeds over current connections and Px64 Multiplexes. For 384 kbps (H0) calls, endpoints indicate 384 kbps support, that displays as 384. On 336 kbps calls, endpoints must signal 384 kbps support. If an endpoint does not indicate support for 384 kbps on a 384/336 kbps conference, the MCU provides Audio Only Communications Mode (ACOM). For a 2B conference, the MCU sets the rate to 2x64, expecting the endpoints to do likewise (64x2 displays; if this is not displayed, no 64x2 capability exists). Endpoints may remove 2x64 (or the current channel rate: 384, 768, 1472, 1536) from their capability. This is Mode 0 forcing and is a normal procedure. The MCU provides AOCM if the endpoint does not signal support that matches the conference configuration.
AUD	Audio. Audio protocols that the endpoint supports. 711m and 711a are PCM (G.711) and support Mu and A-law, respectively. Endpoints require at least one. The g728 field indicates if G.728 is supported (LB_CELP). This value depends upon the endpoint type and configuration. The g722_48 field indicates endpoint support for G.722 (7 kHz) at both 48 kbps and 56 kbps. The g722_64 field indicates endpoint support for G.722 at 64 kbps in an unframed (unsupported by the MCU) mode.
LSD	Low Speed Data conferencing capabilities.
HSD	High speed Data conferencing capabilities.
MLP	Multi Layer Protocol Data capabilities.
HMLP	High Speed MLP data conferencing capabilities.

Page 5 - Endpoint Call Status Information

This page summarizes call-related status for per-channel join counts, join/drop times, drop reasons, drop codes, and auxiliary bonding drop codes. In addition, it contains drop codes and software fields from the previous call. The data on the page is retained. The Endpoint Call Status Information section groups all call-related fields. The only new field in this section is Join Count; all other fields are described in Screen 2-3 and Screen 2-4.

```
status conference endpoint                                          page 5 of 6

                        ENDPOINT CALL STATUS INFORMATION

     Join   Join  Drop   -------------- Drop --------   --- Previous -----
Chan Count  Time  Time   Reason       Code    BondCode   DropCode  Software
  1:  __    _____ _____  __________   __       __         __      ________
  2:  __    _____ _____  __________   __       __         __      ________
  3:  __    _____ _____  __________   __       __         __      ________
  4:  __    _____ _____  __________   __       __         __      ________
  5:  __    _____ _____  __________   __       __         __      ________
  6:  __    _____ _____  __________   __       __         __      ________
  7:  __    _____ _____  __________   __       __         __      ________
  8:  __    _____ _____  __________   __       __         __      ________
  9:  __    _____ _____  __________   __       __         __      ________
 10:  __    _____ _____  __________   __       __         __      ________
 11:  __    _____ _____  __________   __       __         __      ________
 12:  __    _____ _____  __________   __       __         __      ________
```

Screen 2-7. Page 5 of 6: status conference *x* endpoint *y*

Field descriptions

`Join Count` Tallies the number of times this endpoint joins this conference during this session. This counter starts with 0, increments to 64, and wraps around back to 1.

Page 6 - Administered Connections

This page summarizes information for administered connections associated with this endpoint. This data can be viewed while the conference is active.

```
status conference endpoint                                          page 6 of 6

                    ADMINISTERED CONNECTIONS INFORMATION

     AC                                                        Retry   Failure
Chan Num  Dial-out Number          Connection State            Count   Cause
  1: ___  ____________________     ____________________         __      __
  2: ___  ____________________     ____________________         __      __
  3: ___  ____________________     ____________________         __      __
  4: ___  ____________________     ____________________         __      __
  5: ___  ____________________     ____________________         __      __
  6: ___  ____________________     ____________________         __      __
  7: ___  ____________________     ____________________         __      __
  8: ___  ____________________     ____________________         __      __
  9: ___  ____________________     ____________________         __      __
 10: ___  ____________________     ____________________         __      __
 11: ___  ____________________     ____________________         __      __
 12: ___  ____________________     ____________________         __      __
```

Screen 2-8. Page 6 of 6: status conference *x* endpoint *y*

Field descriptions

`Dial-out number`

Numbers that are dialed out by administered connections for each channel in the call. The dial Out #1 and #2 on page 1 of the forms display the DCP endpoint number. This is particularly useful with bonding dial-out calls.

`Connection State`

The call state of the AC. The following are connection states associated with dial-out ACs:

“enabled” = Transient in nature indicating that an AC is about to enter the “attempting to connect” state.

“disabled” = one of three options:

- The AC reaches an administered retry threshold, and all retries are stopped. To verify this, check the Error Log to see if an error type of 9 is logged against the AC.
- The AC is in a connected state with the far end disconnected.
- The initial channel call is not connected. No dial out call attempt is made for the additional channels until the initial channel has reaches a connected state.

“not scheduled” = Transient in nature, indicating that an AC is about to enter the “attempting to connect” state.

“waiting to retry” = The AC is inactive, waiting for the retry timer to expire. Once the timer expires, the AC sends a dial out call and enters the “attempting to connect” state. In this state, dial out calls fail at least once.

“attempting to connect” = The AC is active, but has not connected.

“connected” = The call associated with the AC is answered and joins cut-thru to the conference.

`Retry Count`

Tallies the attempted retries for this AC during join attempts and does not clear when the AC connects. However, it clears when the Redial feature attempts a new join. This differs from the `Join Count` which counts the number of times the channel joins the conference during this conference session.

`Failure Cause`

An ISDN or CPTR cause value (values lower than 0x7f) records when the last dial out call drops. Values above 0x7f are generated internally. Table 2-5 lists all possible failure cause values displayed by this field and its associated description. The `Failure Cause` value logs in the Error Log and displays with the **display errors** command. (`Err Type` is normally displayed as a decimal.)

Table 2-5. Status AC - Failure Cause Values

Failure Cause (hexadecimal)	Description
0x00 (0t0)	N/A
0x01 (0t1)	Incorrect destination address
0x02 (0t2)	Reason unknown

Continued on next page

Table 2-5. Status AC - Failure Cause Values — *Continued*

Failure Cause (hexadecimal)	Description
0x06 (0t6)	Reason unknown
0x10 (0t16)	Normal call clearing
0x11 (0t17)	Endpoint not available
0x12 (0t18)	ISDN timer expired
0x15 (0t21)	Reason unknown
0x12 (0t22)	Destination address changed
0x1C (0t28)	Bad destination or access denied
0x1D (0t29)	Access denied
0x1F (0t31)	Reason unknown
0x22 (0t34)	Trunks unavailable
0x26 (0t38)	Temporary or facility failure
0x29 (0t41)	Temporary or facility failure
0x2A (0t42)	Resources unavailable
0x2C (0t44)	Resources unavailable
0x32 (0t50)	Access denied
0x34 (0t52)	Access denied
0x36 (0t54)	Access denied
0x3A (0t58)	Resources unavailable
0x41 (0t65)	Required capability not implemented
0x42 (0t66)	Required capability not implemented
0x45 (0t69)	Required capability not implemented
0x51 (0t81)	ISDN protocol error
0x52 (0t82)	Required capability not implemented
0x58 (0t88)	Incorrect destination number
0x60 (0t96)	ISDN protocol error
0x61 (0t97)	ISDN protocol error
0x62 (0t98)	ISDN protocol error
0x64 (0t100)	ISDN protocol error
0x66 (0t102)	ISDN timer expired
0x7f (0t127)	Reason unknown

Continued on next page

Table 2-5. Status AC - Failure Cause Values — *Continued*

Failure Cause (hexadecimal)	Description
0xC2 (0t194)	Ring no answer
0xC8 (0t200)	Hi and dry - no feedback detected
0xC9 (0t201)	Cascade link administered wrong
0xCA (0t202)	CPTR not available to detect failure

status data-module

This command displays internal software state information that can help locate facilities to which the data module is communicating.

Action/Object	Qualifier	Qualifier Description	Permissions	Defaults	Feature Interactions
busyout mis	***extension***	Data module extension	init inads craft cust rcust bcms browse	none	none
	print	Report sent to printer			

Output

The following example shows the output from the **status data-module 301** command.

```
status data-module 301

                          DATA-MODULE STATUS

Data Ext/Stn Ext for Stn DM: 301        Service State: out-of-service
        Port/Channel Number: 01C1103    Maintenance Busy? no
         CF Destination Ext:
            Connected Ports:
```

Field descriptions

`Data Ext/Sta Ext for Stn DM`	The data module extension number. The DTDM is an exception: the connected station extension is shown.
`Port/Channel Number`	The port location of the data module (cabinet-carrier-slot-circuit). If the data module specified is a data channel, the channel number will be shown instead.
`Service State`	This entry displays the status of the data module; valid states are: — In-service/idle — The data module is present but not in use. — In-service/active — The data module is present and is in use. — Out-of-service — The data module has been removed from service — Disconnected — The data module no longer appears to be present
`CF Destination Ext`	This entry displays the call forwarding destination, if any, of the station.
`Maintenance Busy?`	Whether maintenance is testing the object, “yes” or “no”.
`Connected Ports`	Port locations to which the data module is connected (cabinet-carrier-slot-circuit).

status esm

This command displays the link status and equipment and software revision identifiers for the Expansion Service Module (ESM). See in for more information.

Action/Object	Qualifier	Qualifier Description	Permissions	Defaults	Feature Interactions
status esm			init inads craft	none	none

Output

The following output example is a display of the **status esm** command.

```
 status esm                                                    page 1 of 1

                            SYSTEM STATUS ESM

                        Link Status: up

VINTAGE
                    RMB Product ID: NA
      MSM Interface Card Vintage: 5.3.d
    UNIX System Revision SNumber: 1.1.4
    ESM Software Revision Number: ESM.4.2.07
    State of ESM Process Manager: 1
```

status hardware-group

This command displays summary information for the active or last hardware group test. This display includes the number and percentage of tested maintenance objects, the percentage of tests passed, failed, and aborted, the time elapsed since initiating the hardware group test, the specific hardware group test command (see "test hardware-group" command) initiated, and the state (active/canceled/complete) of the hardware-group test.

Action/Object	Qualifier	Qualifier Description	Permissions	Defaults	Feature Interactions
status hardware-group	***print***	Report sent to printer	init inads craft cust rcust bcms browse	none	none

Output

The following example shows the output from the **status hardware-group** command.

```
status hardware-group                          page 1 of 1

                    HARDWARE GROUP STATUS

           Hardware Group Command State:   active
                   Number of MOs Tested:   11070
       Total Number of MOs to be Tested:   12300
                       Percent Complete:      90%
         Elapsed Test Time (hr:min:sec): 0:15:30
                     Repetition Number:       1
             Percentage of Tests Passed:      82%
             Percentage of Tests Failed:      11%
            Percentage of Tests Aborted:       7%


                ENTERED HARDWARE GROUP COMMAND

          Command: test hardware-group system
     Test sequence: short
   Test repetition: repeat 3
    Output Options: failures
  Hardware Options: SPE-interchange
```

Field descriptions

Hardware Group Command State:	“active” = testing in progress, “canceled” = testing canceled, “complete” = command completed; no testing occurring.
Number of MOs Tested:	Number of MOs in the specified group (refer to **test hardware-group** command) that the **hardware-group** command tests, including MOs that were tested or aborted due to resource contention.
Total Number of MOs to be Tested:	Number of MOs in the group specified in the **test hardware-group** command.
Percent Complete:	Ratio of the completed MOs to the MOs to test in the command.
Elapsed Test Time:	Tracks completion time for the **hardware-group** command. If a test cancels and then restarts, the time for the cancel period is excluded. (HH:MM:SS)
Repetition Number	Number of completed iterations that correspond to the ’repeat’ or ’continuously’ option.
Percentage of Tests Passed:	Percentage of tests that passed.
Percentage of Tests Failed:	Percentage of tests that failed.
Percentage of Tests Aborted:	Percentage of aborted tests
Command:	Hardware-group action objects and qualifiers.
Test sequence:	Short or long.

`Test repetition:` Displays continuously or the keyword repeats with the entered repeat value.

`Output options:` Selections that were chosen on the input form: auto-page, background, or failures.

`Hardware options:` Selections that were chosen on the input form: all-ports, or SPE-interchange.

status health

This command displays the current system alarm summary, maintenance busy summary, user summary, critical system status, and cabinet status. This same page displays with the **monitor health** command, except that the **status health** output page does not update periodically.

Action/Object	Qualifier	Qualifier Description	Permissions	Defaults	Feature Interactions
status health	***print***	Report sent to printer	init inads craft cust nms browse	none	none.

Output

The following example shows the output from the **status health** command.

```
 status health

ALARM SUMMARY                              CABINET STATUS
       Major:   0
       Minor:   2                          Emerg  Alarms
     Warning:   0                     Cab Trans Mj Mn Wn PNC
                                        1 auto-  0| 2| 0 up
BUSY-OUT SUMMARY                        2 n.a.   0| 0| 0 dn
      Trunks:   0                       3 n.a.   0| 0| 0 dn
    Stations:   0
      Others:   0
PROCESSOR OCCUPANCY STATUS
Static:   1%    SM:    1%
    CP:   1%  Idle:   97%
CRITICAL SYSTEM STATUS
 Active SPE: A/auto
 Duplicated? SPE:n
  SPE Power: commercial
Time Source: primary
   # Logins: 3                                 11:12 THU APR 3, 1997

Command:
```

Field descriptions

Major	Number of logged major alarms. (0–200)
Minor	Number of logged minor alarms. (0–200)
Warning	Number of warnings logged in the alarm file. (0–200)
Trunks	Number of maintenance busied out trunks.
Stations	Number of maintenance busied out stations.
Others	Combined number of maintenance busied out objects excluding trunks and stations.
Static	Proportion of the CPU that is dedicated to high priority items (for example, the operating system). This percentage is rounded to the nearest integer, therefore a percentage of 0 means that the occupancy is less than one half of a percent.
SM	Proportion of the CPU that is dedicated to system management or periodic and scheduled maintenance. If many periodic or scheduled maintenance tests perform, this occupancy percentage can be high without affecting service. This percentage rounds to the nearest integer; therefore, a percentage of 0=the occupancy is less than one half of a percent (for example, an 89.6% occupancy displays as 90%).
CP	Proportion of the CPU that is dedicated to call processing. This occupancy has priority over SM and IDLE occupancy categories, and if needed, takes processor time from these occupancy categories. This percentage is rounded to the nearest integer.
Idle	Available proportion of the CPU. This percentage is rounded to the nearest integer.
Active SPE	A or B indicate the active processor complex. When the active processor complex is locked on-line with lock switching on DUPINT, the “lock” option displays; otherwise, “auto” displays.
Duplicated?	Duplication status of the SPE component. “y” = duplication; “n” = no duplication.
SPE Power	Power source for the processor complex. (commercial) When commercial power is unavailable, battery backup is in use and is indicated with “backup”.
Time Source	The current timing source. Display values for this field vary according to timing sources selected. “external” = For Stratum-3 hardware, “internal” = an internal source, such as a tone clock. Primary and secondary timing sources must be administered for the Stratum-4 option. “primary”= the primary administered source is in use, “secondary” = the administered secondary source is in use. “local” = neither the primary or secondary sources are in use.
# Logins	Number of current users.

`Cab` Assigned cabinet number (1 to the highest system cabinet number).

`Emerg Trans` Settings for emergency transfer switches on the maintenance board for each cabinet. Available options are: auto-on (“auto+” or “a+”), auto-off (“auto-” or “a-”), “on”, “off”, and “n.a.”. The system defaults to “auto+” or “auto-”. In this state, emergency transfer activate automatically if the cabinet fails (“+”=emergency transfer is activate, “-” = emergency transfer is inactive). “on” = emergency transfer automatically activates. “off”=the cabinet cannot activate emergency transfers. Duplicated SPEs systems = switch settings for both processors of the PPN (cabinet 1) display. In this case, “auto+” is abbreviated “a+”, “auto-” is abbreviated “a-”, and “off” is abbreviated “of”. “on” does not change. “n.a.” = the emergency transfer switch setting is unavailable.

`Mj` Number of major alarms associated with the cabinet. Asterisks are used to fill fields when numbers exceed 99.

`Mn` Number of minor alarms associated with the cabinet. Asterisks are used to fill fields when numbers exceed 99.

`Wn` Number of warnings associated with the cabinet. Asterisks are used to fill fields when numbers exceed 99.

`PNC` Port Network Connectivity (PNC) status for each port networks within a cabinet. When multiple port networks exist, Carriers A, B, and C are listed first and separated from Carriers D and E by a slash (for example, up/up).

`Time of Day` Current time of day acquired from the system.

status interface

This command displays the number of counters maintained by the PI (a front end processor implementing packet layers and link layers of the BX.25 protocol and the ISDN procedure-D protocols).

Action/Object	Qualifier	Qualifier Description	Permissions	Defaults	Feature Interactions
status interface	***location***	Location of processor interface (PI) board: (cabinet-carrier-position) 1 = first processor interface 2 = second processor interface	init inads craft cust rcust	1 (one)	none
	print	Report sent to printer	bcms browse		

Output

The following example shows the output from the **status interface a1** command.

```
status interface a1

                  PROCESSOR INTERFACE STATUS

       Base Level Occupancy(low): 10
      Base Level Occupancy(high): 25
       Primary Queue Audit Error: 4
     Secondary Queue Audit Error: 10
         Translation Audit Error: 12
      Protocol Timer Audit Error: 0
         Hardware Sanity Timeout: 1
         Hardware Resource Error: 12
         Hardware Overload Error: 8
```

status isdn-testcall

This command displays the progress of an outgoing ISDN-PRI test call. The status form displays the tested ISDN-PRI B-channel port number, bit error rate, number of bits transmitted, block error rate, number of blocks transmitted, start time, duration specified, duration of test call and reason of termination.

Action/Object	Qualifier	Qualifier Description	Permissions	Defaults	Feature Interactions
status isdn-testcall	***group number***	Administered trunk group number	init inads craft	none	see below
	group member number	Administered group number (trunk within a trunk group)			
	print	Report sent to printer			

Feature Interactions

If the bit error rate or block error rate is greater than zero, the ISDN-PRI trunk may be in trouble. The statistical information displayed on the terminal may deactivate the ISDN trunk. This is subjective because the ISDN trunk may be used for data or voice. If the trunk is used for data and the rates are high, the trunk should be deactivated. If the trunk is used for voice, the trunk may not be deactivated. Also, high rates be at risk for some type of power hit.

Output

The following example shows the output from the **status idsn-testcall 80/1** command.

```
status isdn-testcall 80/1                  Page 1 of   1   SPE A

                            ISDN TESTCALL STATUS

          Bit   Number Block Number          Duration         Reason
          Error Of     Error Of     Start    Duration  Of     Of
Port      Rate  Bits   Rate  Blocks Time     Specified Test   Termination

1B1401    0EE0  4EE7   0EE0  6EE2   25/12:36 120       100    in progress
```

Field descriptions

`Port`	(cabinet/carrier/slot/circuit) of the ISDN-PRI B-channel.
`Bit Error Rate`	The measured bit error count based on the comparison between sent and received bit patterns. (Number displays in scientific notation)
`Number of Bits`	Number of bits generated. (Number displays in scientific notation)
`Block error Rate`	The measured block error count based on the comparison between sent and received bit patterns. (Number displays in scientific notation).
`Number of Blocks`	Number of blocks generated. (Number displays in scientific notation)
`Start Time`	Test call start time. (dd/hh:mm).
`Duration Specified`	Specified run time for the test call. (1-120 minutes, or blank = default of 10 seconds).
`Duration of Test`	Run time for the test call, listed in minutes. “blank” = a default time.
`Reason of Termination`	Reason that the test call terminates: “finished,” “canceled,” “overflow,” “no bits,” “transmission,” “internal fail,” “data corrupt,” “call dropped,” “call rejected,” and “in progress.” “finished” = the test finishes in the specified time. “canceled” = the test call cancels with the **clear isdn-testcall** command. “overflow” = the transmitted bits overflow buffer allocation. “no bits” = no bits are received because the ISDN-PRI test call circuit connection is bad. “transmission” = a data transmission interrupts, probably from a power hit. “call dropped” = the call drops due to an abnormal termination, or inability to cut-through to the other side. “call rejected” = the originating call is not set up properly. “internal fail” = an internal error on the Maintenance/Test circuit pack. “in progress” = the test is still running; “data corrupt” = any other error condition.

status journal-link

This command displays if the link is up or down. If the link is down, the system displays the number of times the switch tries to initialize the link. A journal printer documents automatic wake-up events, emergency access to attendant events, and housekeeping events when the property management system is not functional. A journal printer may also generate reports for automatic wake-up events and emergency access events at a scheduled time. If system configuration includes two printers, one is for housekeeping events only and the other is for automatic wake-up events and emergency access events.

For general information on journal printer links, see the description of the "busyout journal-printer" section.

Action/Object	Qualifier	Qualifier Description	Permissions	Defaults	Feature Interactions
status journal-link	***wakeup-log***	printer that handles automatic wakeup and emergency access to attendant events and scheduled reports.	init inads craft cust rcust bcms browse	none	none
	pms-log	printer that handles pms down events.			
	print	Reports print to SAT-linked printer.			

Output

The following example shows the output from the **status journal-link wakeup-log** command.

```
status journal-link wakeup-log

                      JOURNAL LINK STATUS

       Link State: up
 Maintenance Busy? no
```

Field descriptions

`Link State` If extensions are administered in the System Parameters Hospitality form, wakeup-logs or pms-log links are considered to be administered only.

`Maintenance Busy` Is maintenance testing performing on the link?

status link

This command displays the operational status associated with a specified processor interface link. Since no links are administered in a TN798 processor system, this command does not apply.

status packet-interface

This command displays the status of the packet-interface portion of the TN798 processor circuit pack along with link information. Link status information including total, active, and failed links also display. When the packet-interface is out-of-service or uninstalled, it is not used to establish and maintain links; when it returns to in-service status, new links are again assigned to it.

Action/Object	Qualifier	Qualifier Description	Permissions	Defaults	Feature Interactions
status packet-interface	***print***	Report sent to printer	init inads craft	none	none

Output

The following example shows the output from the **status packet-interface** command.

```
status packet-interface

                    PACKET INTERFACE STATUS

     Location:       01A
Service State:       in-service

  Total Links:       32
 Active Links:       32
 Failed Links:       0
```

Field descriptions

`Location`	Location: (cabinet-carrier-circuit pack)
`Service State`	`standby` is used in place of `in-service` for the standby packet-interface.
`Total links`	Total number of links
`Active links`	Number of links in use
`Failed links`	Number of failed links (equals # of total links - # of active links)

status pms-link

This command displays the status of the property management system interface link. If the link displays even when a data base swap occurs between the switch and PMS. If the link is down, the display indicates the number of times the switch tried to set up the link.

A property management system (PMS) is a stand-alone computer system which can be integrated with the switch to enhance the service capability for a hotel/motel.

For general information on PMS links, see the description of the ''busyout pms-link'' command.

Action/Object	Qualifier	Qualifier Description	Permissions	Defaults	Feature Interactions
status pms-link	***print***	Report sent to printer.	init inads craft cust browse	none	none

Output

The following example shows the output from the **status pms-link** command.

```
status pms-link

                        PMS LINK STATUS

    Physical Link State: down
         Protocol State: down
       Number of Retries: 3
        Maintenance Busy? no
```

Field Description

`Physical Link State`	Up, down, or extension not administered displays. The PMS link is considered administered only if an extension is given in the System Hospitality form.
`Protocol State`	"up", "down", or blank if not administered.
`Number of Retries`	Number of times the switch has tried to set up the link. Displays when the link is down. (1–999)
`Maintenance Busy`	"yes", or "no" (that is, system technician has or has not busied out the link). Blank if PMS link not administered.

status pri-endpoint

This command displays internal software state information for diagnosis and can help locate facilities with which a PRI endpoint is communicating. Status information for each of the B-channels making up the PRI endpoint display in addition to some overall PRI endpoint information.

Action/ Object	Qualifier	Qualifier Description	Permissions	Defaults	Feature Interactions
status pri-endpoint	***extension***	PRI endpoint extension to be displayed (see dial-plan).	init inads craft nms browse	none	none
	print	Report sent to printer			
		Examples: **status pri-endpoint 25012** **status pri-endpoint 77868** **status pri-endpoint 66078 print**			

Output

The following example shows the output for the status pri-endpoint 22501 command and assumes the following:

- PRI endpoint ports for extension 22501 are in cabinet 1, carrier B, slot 20, circuit 1 to 6.
- The ports 1 to 3 of the specified PRI endpoint are connected on an active call to ports 13 to 15 of board in location 1B19 (cabinet 1, carrier B, slot 19).
- Ports 4 and 5 of the specified PRI endpoint are idle.
- Port 6 of the specified PRI endpoint is out of service, and background maintenance testing is being performed on the port.

NOTE:
A PRI endpoint can initiate and receive a call on any one or more of the B-channels making up the PRI endpoint.

```
status pri-endpoint 22501                                page 1 of 1


                        PRI-ENDPOINT STATUS

                    Extension: 22501                Width: 6
           Signaling Group ID: 3       B-Channels Active: 3
 Originating Auto Restoration? n         B-Channels Idle: 2


  Port     Service State       Test In Progress  Connected Port
  01B2001  in-service/active          n          01B1913
  01B2002  in-service/active          n          01B1914
  01B2003  in-service/active          n          01B1915
  01B2004  in-service/idle            n
  01B2005  in-service/idle            n
  01B2006  out-of-service-NE          y


Command Successfully Completed
```

Note that the line listing of each B-channel's status may continue onto the next page. The user is prompted to press the NxtPg key to continue the display.

Field descriptions

Extension	PRI endpoint extension
Width	Administered number of B-channels associated with the specified PRI endpoint
Signaling Group ID	ID number of the signaling group that handles the signaling for the ports in the specified PRI endpoint
Originating Auto Restoration	Administered option for the auto restore feature (restores calls originated from this PRI endpoint in the case of network failure): y = restoration option enabled n = restoration option disabled
B-Channels Active	The number of B-channels active on a call
B-Channels Idle	The number of B-channels in the in-service/idle state
Port	Port locations (cabinet-carrier-slot-circuit) for each of the B-channels making up the PRI endpoint.

`Service State` Service state of the B-channels: in-service/active, in-service/idle, out-of-service-NE, out-of-service-FE, maint-NE/active, maint-FE/active, maint-NE/idle, and maint-FE/idle.

NE (Near End) and FE (Far End) refer to which “end” of the B-channel has placed the facility in the current state. NE refers to the switch and FE refers to the PRI terminal adapter (or any device that terminates the D-channel signaling on the facility).

`Test In Progress` Whether or not there is any current maintenance testing on the port.

`Connected Port` Connected port location (cabinet-carrier-slot-circuit) for each of the B-channels active on a call.

status processor-channel

This command displays the status of the specified processor channel and the values of its various counters. A processor channel is 1 of 64 logical channels associated with an SCI link. Each processor channel terminates in the switch processing element with a session.

Action/ Object	Qualifier	Qualifier Description	Permissions	Defaults	Feature Interactions
status processor-channel	***channel number***	Processor channel number (1-64).	init inads craft cust rcust bcms browse	none	none
	print	Report sent to printer			
		Examples: **status processor-channel 1** **status processor-channel 10** **status processor-channel 64** **status processor-channel 64 print**			

Output

The following example shows the output from the **status processor-channels 1** command.

```
status processor-channels 1


                      PROCESSOR CHANNEL STATUS

        Channel Number: 1
        Channel Status: 6: In data transfer state
           Reset Count: 3
 Message Buffer Number: 1
           Link Number: 4
  Retransmission Count: 5
```

Field descriptions

`Channel Number`	The processor channel number 1-64.
`Channel Status`	State the channel is in: 1. Channel is not administered. 2. Channel is administered but not used. 3. Channel is in a state entering “wait session accept” (WSA). 4. Channel is in a state waiting for a “session accept” message from the far end. 5. Channel is waiting for action. 6. Channel is in data transfer state (channel up and running). 7. Channel is in resynchronization state. 8. Channel is waiting for acknowledge of disconnect message. 9. ISDN-PRI Channel is currently down. 10. ISDN-PRI Channel is in the data transfer state (that is, channel is up and running).
`Reset Count`	Number of times reset has been issued for this channel
`Message Buffer Number`	Number of message buffers currently used for communication on this channel.
`Link Number`	Physical SCI link (1-8) associated with the channel
`Retransmission Count`	Number of times that message retransmission has occurred

status signaling-group

This command displays the state, type, port location, and state of the Primary and Secondary D-channels within the group. A signaling group is a collection of B-channels signaled for by a designated single D-channel or set of D-channels over an ISDN-PRI.

Action/Object	Qualifier	Qualifier Description	Permissions	Defaults	Feature Interactions
status signaling-group	***group identifier*** ***print***	Administered group identifier number (1-8) Report sent to printer Examples: **status signaling-group 1** **status signaling-group 2 print**	init inads craft cust browse	none	none

Output

The following output example shows the output from the **status signaling-group 1** command.

```
status signaling-group 1                    Page 1 of   1   SPE A


                      STATUS SIGNALING-GROUP

      Group ID: 1
          Type: facility associated signaling
   Group State: in-service


                      Primary D-Channel

 Link: 1    Port: 01C1924  Level 3 State: in-service


                     Secondary D-Channel

 Link:    Port:      Level 3 State:
```

Field descriptions

`Group ID:` Numerical ID of the signaling group (1-8)

`Type:` `facility associated signaling`: all members are on a single DS-1 facility. Facility associated signaling groups support only the simplex D-channel configuration.

`non-facility associated signaling`: members can be carried by multiple DS-1 facilities.

The DS-1 facility is identified across the ISDN-PRI using an explicit facility identifier. In a simplex configuration one D-channel is used to signal for B-channel members.

`Group State:` `in-service`: one of the D-channels signaling for the group is in service

`out-of-service`: neither D-channel in the group is in service

NOTE:
If there is no D-channel backup and the primary D-channel is out-of-service, then the signaling group is in an out-of-service state.

`Link:` Link transporting the D-channel

`Port:` Address of the port transporting either the primary or secondary D-channel

`Level 3 State:` State of the primary or secondary D-channels:

`in-service`: a D-channel is “in-service” when it is in the multiple-frame-established state at layer 2 carrying normal call-control signaling at layer 3.

`standby`: a D-channel is “standby” when it is in the multiple-frame-established state at layer 2, and not carrying any layer 3 call-control messages on logical link 0,0.

`wait`: a D-channel is in a “wait” state when an attempt has been made by one side of the interface to establish layer 3 peer communications as part of the process of going to the “in-service” state, which is transitional in nature. Only when the `ISDN SERVICE` message is sent over the interface, and the far end of the interface responds with a SERVICE ACKnowledge message is the D-channel placed in the “in-service” state.

`maintenance-busy`: a D-channel is “maintenance-busy” when it is not in the multiple-frame-established state at layer 2. This state is entered automatically when an active D-channel is declared failed. A D-channel that has been placed in the “maintenance-busy” state may be placed in the “out-of-service” state without system technician intervention.

`manual-out-of-service`: a D-channel is “manual-out-of-service” when system technician intervention has caused it to be placed in the TEI-assigned state at layer 2. System Technician intervention is required to retrieve a D-channel from this state.

`out-of-service`: a D-channel is “out-of-service” when it is in the TEI-assigned state at layer 2, but is periodically requested by layer 3 to attempt to establish the link.

`no-link`: no link is administered for the D-channel

status sp-link

This displays a page of output summarizing the operational status of the system printer link: its link state, number of retries, and whether the link is maintenance busy.

Action/Object	Qualifier	Qualifier Description	Permissions	Defaults	Feature Interactions
status sp-link	***print***	Report sent to printer Examples: **status sp-link** **status sp-link print**	init inads craft cust rcust bcms browse	none	none

Output

The following example shows the output for the **status sp-link** command.

```
status sp-link                                SPE A


                      SYSTEM PRINTER LINK STATUS

        Link State: up
 Number of Retries:
  Maintenance Busy? no
```

Field descriptions

`Link State:`	Operational mode of the link: `up`: the link is administered and a call is setup between the switch and the system printer. `down`: the link is administered, but a call is not setup between the switch and the system printer. `extension not administered`: the link (no system printer extension) is not administered
`Number of Retries:`	Number of times the switch has tried to set up the link since a request to set up the link was received (1-999); if more than 999 retries have occurred, 999 still displays. (This field displays only if the `Link State:` field is `down`.)
`Maintenance Busy?`	Whether any maintenance testing is being performed on the system printer link: `yes` and `no`: system printer link is administered blank: system printer link is not administered.

status station

This command displays the internal software state information for diagnosis and to help locate the facilities to which the station is communicating.

Action/ Object	Qualifier	Qualifier Description	Permissions	Defaults	Feature Interactions
status station	***extension*** ***print***	Station extension (per dial-plan) Report sent to printer Examples: **status station 10020** **status station 83277** **status station 83277 print**	init inads craft cust browse	none	none

Output

The following example shows the output for the **status station 1002** command.

```
status station 1002


                         GENERAL STATUS

                  Type: 7405D          Service State: in-service/on-hook
             Extension: 1002         Download Status: not-applicable
                  Port: 01C0702        SAC Activated? no
           Call Parked? no          User Cntrl Restr: none
      Ring Cut Off Act? no         Group Cntrl Restr: none
Active Coverage Option: 1         CF Destination Ext:

       Message Waiting:
       Connected Ports:

        ACD STATUS            HOSPITALITY STATUS

Grp/Mod Grp/Mod Grp/Mod Grp/Mod Grp/Mod    AWU Call At:
   /       /       /       /       /          User DND: not activated
   /       /       /       /       /         Group DND: not activated
   /       /       /       /       /       Room Status: non-guest room
   /       /       /       /       /

      On ACD Call? no

Command:
```

Field descriptions

Type	Administered station type
Extension	Station or attendant extension
Port	Port location: cabinet-carrier-slot-circuit
Call Park	Whether the station has a call parked (yes or no)
Ring Cut Off Activated	Whether ring cut off is activated (yes or no)
CF Destination Ext	Call forwarding destination extension, if any.
Message Waiting	Whether there is a message waiting for the station. “AP-SPE”, “AUDIX”, “PMS” or blank if no messages are waiting.
Connected Ports	Port locations of the facilities to which the station is connected: cabinet-carrier-slot-circuit
Agent Logged In	Displays (underneath) the hunt groups (up to 3) that the agent is logged into
On ACD Call?	Whether the agent is on an ACD call currently (yes or no).

`Work Mode`	Work mode of each hunt group that an agent is logged into
`Service State`	In service/on-hook, in service/off-hook, out of service, or disconnected.
`Maintenance Busy State`	Whether maintenance is testing the object (`yes` or `no`)
`SAC Activated`	Whether send all calls is activated (`yes` or `no`)
`User Cntrl Restr`	One or two of the following: `none`, `total`, `stat-stat`, `outward` or `terminate`.
`Group Cntrl Restr`	One or two of the following: `none`, `total`, `stat-stat`, `outward` or `terminate`.
`AWU Call at`	Time that Automatic Wakeup Call is scheduled
`User DND`	Status of the do not disturb feature.
`Group DND`	Status of the group do not disturb feature.
`Room Status`	Whether a room is `occupied` or not (`non-guest room`, `vacant`, or `occupied`).

status synchronization

This command displays the location of the DS1 or tone-clock circuit pack that is used for an on-line synchronization reference. The synchronization subsystem provides error free digital communication between the switch and other PBXs, COs, or customer premise equipment. The subsystem is made up of: TDM bus clock, DS1 trunk board, maintenance and administration software resident in the SPE.

Action/Object	Qualifier	Qualifier Description	Permissions	Defaults	Feature Interactions
status synchronization	***print***	Report sent to printer Examples: **status synchronization** **status synchronization print**	init inads craft cust browse	none	none

Output

The following example shows the output for the **status synchronization** command.

```
status synchronization


                         SYNCHRONIZATION STATUS

                Stratum Level:4
             Maintenance Name: TONE-BD   Physical Location: 01A
         Switching Capability: Enabled
Excessive Reference Switching: No
```

Field descriptions

`Stratum Level`	Synchronization stratum level (3 or 4)
`Maintenance Name:`	Either `TONE-BD`, `DS1-BD`, or `STRAT-3`.
`Physical Location`	Board location of the selected DS1 or tone-clock circuit pack (cabinet-carrier-slot for a DS1; cabinet-carrier for a tone-clock)
`Switching Capability`	Whether the on-line reference for synchronization can be switched (`Enabled` or `Disabled`)
`Excessive Reference Switching`	High-level description of how many times the synchronization reference has been switched. If excessive reference switching is taking place (sync error 1793 is at threshold), this field displays `Yes`; otherwise `No` displays.

status sys-link

This command displays status data for a specified system link. The report includes the type and operational state of the link, the associated processor channel (if any), active alarms and path status, and a list of all hardware components making up the link's path.

Action/Object	Qualifier	Qualifier Description	Permissions	Defaults	Feature Interactions
status sys-link	***location***	Port location: **PCSSpp** Example: **status sys-link 1b0201**	init inads craft	none	none

Output

The following example shows the output from the **status sys-link 01a0516** command.

```
status sys-link 01a0516                                  Page   1 of   2
     Location: 01a0516       Type/Chan: PRI            Alarms: none
 Current Path: present    Faulted Path: present    Last Fault: 04/30/1997 14:18
        State: up
                              Current Hardware Path

             Maintenance                             Maintenance
 Location    Name       Alarms            Location    Name       Alarms

 01A         PKT-INT    major
 PN 01       TDM-BUS    none
```

If a faulted path exists in addition to the current path, the components making up the faulted path display on page 2 of the report:

```
status sys-link 01a0516                                  Page   2 of   2
     Location: 01a0516       Type/Chan: PRI            Alarms: none
 Current Path: present    Faulted Path: present    Last Fault: 04/30/1997 14:18
        State: up
                              Faulted Hardware Path

             Maintenance                             Maintenance
 Location    Name       Alarms            Location    Name       Alarms
```

Field descriptions

`Location`	Port location (cabinet-carrier-slot-circuit)
`Type/Chan`	Type of system-link: PRI (ISDN-PRI signaling link)
`Alarms`	Highest alarm level currently logged against the components making up the link.
`Current Path`	Operational status of the current path: `none`: link is down. `present`: current path displayed is valid.
`Faulted Path`	The status of the faulted path, if any: present: path of the link has been faulted at least once. none: no record of the link having gone down default: default faulted path is being used
`Last Fault`	Date and time at which the most recent fault occurred
`State`	Whether the system link is up or down

`Current Hardware Path`	Location, maintenance name, and alarm information for each hardware component making up the current path of the link. The path begins at the Packet Interface in the SPE and terminates at the circuit path terminating the other end of the link.
`Faulted Hardware Path`	If the link encounters a fault, the system reroutes it (if possible) over an alternate route. If this has taken place, the faulted path is displayed on page 2 of the report. The location, maintenance name, and alarm information for each hardware component making up the most recent faulted path is shown.

status system

This command displays the status, mode, and operational attributes of the SPE(s), TDM and Packet busses, tone-clock circuit pack(s), and emergency transfer switch of single or all cabinets in the system.

CAUTION:
The purpose of this command is to provide general information about the cabinet status. This information may not display correctly when the cabinet is in a transient period. In this case, wait for 1 minute and enter the command again.

Action/Object	Qualifier	Qualifier Description	Permissions	Defaults	Feature Interactions
status system	***cabinet***	***1st-cabinet***: PPN Examples: **status system 1st-cabinet** **status system all-cabinets**	init inads craft cust rcust bcms browse	none	none

Output

The following example shows the output from the **status system all-cabinets** command.

```
status system all-cabinets                 Page  1 of  3   SPE B


                         SYSTEM STATUS CABINET 1

                            SELECT  SPE ALARMS    TONE/  SERVICE SYSTEM  SYSTEM
SPE MODE                    SWITCH  MAJOR MINOR   CLOCK  STATE   CLOCK   TONE
1A  active                            0     2     1A     in      active  active


    SERVICE   CONTROL  DEDICATED       SERVICE  BUS ALARMS   BUS   OPEN BUS
TDM  STATE    CHANNEL    TONES    PKT   STATE  MAJOR MINOR  FAULTS  LEADS
1A    in         y         n      1       in     n     n
1B    in         n         y


EMERGENCY   SELECT                SERVICE        CABINET
TRANSFER    SWITCH    EXP-LINK    STATE   MODE     TYPE
1A          auto-off     -                         CMC
1B
```

Field descriptions

SPE	Switch Process Element (SPE) identifier (1A or 1B)
MODE	SPE modes are different for simplex systems than for duplicated systems. See SPE Modes section that follows.
SELECT SWITCH	SPE select switch position: ■ auto: the switch is in the middle position and automatically switches SPE depending upon conditions ■ <blank> always appears for the 1A SPE in a simplex system.
PE ALARMS - MAJOR	Number of Major alarms associated with the SPE complex that affect the fault severity level of this SPE.
SPE ALARMS - MINOR	Number of Minor alarms associated with the SPE complex that affect the fault severity level of this SPE.
TONE/CLOCK	Location of the tone-clock circuit pack (1A and 1B).
SERVICE STATE	■ in: Tone-Clock is installed and is in-service ■ out: Tone-Clock failed certain maintenance tests and has been removed from service ■ <blank> In simplex systems there is no B-carrier Tone-Clock, and this field displays blank.

`SYSTEM CLOCK`

Shows which Tone-Clock supplies the system clock for the cabinet displayed:

- `active`: Tone-Clock active and supplying system clock
- `down`: Tone-Clock failed some maintenance activity and cannot supply the system clock for this cabinet.
- <blank> If simplex, then the 1B Tone-Clock for the PPN displays blank; if no EPN, then both the 1A and 1B Tone-Clock for this EPN display blank.

`SYSTEM TONE`

Shows which Tone-Clock circuit pack supplies the system tones for the cabinet being displayed.

- `active`: Tone-Clock active and supplying system tones
- `down`: Tone-Clock failed some maintenance activity and cannot supply the system tones for this cabinet.
- <blank> If simplex, then the 1B Tone-Clock for the PPN displays blank. If the system does not have an EPN, then both the 1A and 1B Tone-Clock for this EPN display blank.

`TDM`

The TDM Bus identifier (1A and 1B)

`SERVICE STATE`

Operational state of the TDM Bus circuit pack:

- `in`: TDM Bus installed and is in-service
- `out`: TDM Bus failed certain maintenance tests and has been removed from service

`CONTROL CHANNEL`

IWhether the control channel is on this TDM Bus (y or n)

`DEDICATED TONES`

Whether the dedicated tones are on this TDM Bus (y or n)

`PKT`

Packet Bus identifier (1). Refer to Packet Bus Maintenance descriptions for more information.

`SERVICE STATE`

The operational state of the Packet Buses:

- `in`: Packet Bus in-service and operating normally.
- `out`: Packet Bus failed certain maintenance tests and has been removed from service.
- <blank> System does not have the Packet Bus feature.

`BUS ALARMS-MAJOR`

Whether Major alarms exist for packet bus components (y or n)

`BUS ALARMS-MINOR`

Whether Minor alarms exist for packet bus components (y or n)

BUS FAULTS	Number of faulty bus leads (defined as shorted to another lead, stuck at some value, or an open lead: 0 - 24). This field may take on any integer between 0 and 24. This field displays blank if: ■ Maintenance/Test circuit pack not present ■ Packet Bus port of the Maintenance/Test circuit pack has been taken out-of-service ■ System does not have the Packet Bus feature
OPEN BUS LEADS	Number of open bus leads between the Maintenance/Test circuit pack and bus terminator (0 - 24). This could mean physical damage to the backplane or its connectors or a missing bus terminator. This field displays blank if: ■ Maintenance/Test circuit pack is not present ■ System does not have the Packet Bus feature.
EMERGENCY TRANSFER	Location of the Processor or EPN Maintenance circuit pack containing the Emergency Transfer Select Switch (1A and 1B)
SELECT SWITCH	Emergency Transfer Switch position on the Processor(s) or the EPN maintenance circuit pack and the state of Emergency Transfer in the cabinet display: ■ on: Designated analog phones in this cabinet are cut through to CO trunk lines only in an emergency situation. ■ off: Emergency Transfer is off and cannot be invoked. The switch should only be in this state when a service technician is on site. ■ auto-on: The switch is in the or auto position, however, because of a serious system fault, system software has invoked Emergency Transfer. ■ auto-off: Switch in the auto position; because system has no serious faults, system software has not invoked Emergency Transfer ■ <blank> If the system is Simplex, then the 1B Emergency Transfer indication for the PPN will display a blank. If the system does not have an EPN, then both the 1A and 1B Emergency Transfer indications for the EPN will display a blank.
EXP-LINK	The Expansion Link does not exist in the system; a dash (-) displays.
SERVICE STATE	■ <blank> Expansion Interface Link does not exist
MODE	■ <blank> Expansion Interface Link does not exist
CABINET TYPE	■ CMC (Compact Modular Cabinet)

SPE Modes

Simplex SPE Modes

`active`	1A SPE in a simplex system is always the active SPE
`blank`	No 1B SPE in a simplex system

Busyout Modes

`busyout/idle`	SPE busied out and there is no current maintenance activity. The active SPE can be either active or selected.
`busyout/entering`	SPE busied out and in the process of restarting the switch software on this SPE. After the switch software finishes its initialization, the standby SPE is available for maintenance functions on the standby SPE.
`busyout/testing`	SPE busied out, however, the switch software on this SPE has been restarted and is currently in the process of executing a **test** command.
`busyout/ not-refreshed`	SPE busied out, however, the **busyout spe-standby** command was executed at a time when the standby memory was not refreshed. The standby SPE is not able to perform any maintenance or SAT-requested activities until a successful **refresh spe-standby** command is executed.
`busyout/ list-config`	SPE busied out, however, the switch software on this SPE has been restarted and is currently executing a **list configuration** command.
`busyout/status`	SPE busied out, however, the switch software on this SPE has been restarted and is currently in the process of executing a **status card-mem** command.

status trunk

This command displays internal software state information for diagnosis and can help locate facilities to which the trunk is communicating. If a trunk group number is entered without a member number, a list showing the status for each member in the specified group displays. If a both the trunk group and member numbers are entered, the status for only the specified member displays.

Action/Object	Qualifier	Qualifier Description	Permissions	Defaults	Feature Interactions
status trunk	***group***	Administered group number (1 - 99). If group number entered without a member number, a list showing the status of each member in the group displays.	init inads craft cust rcust bcms browse	none	none
	member	Administered member number within a trunk group (1 - 99)			
	print	Report sent to printer.			
		Examples: **status trunk 78** **status trunk 80** **status trunk 78/1** **status trunk 80/2** **status trunk 80/2 print**			

Output

The following example shows the output for the **status trunk 78/1** (trunk group/member) command.

```
status trunk 78/1


                              TRUNK STATUS

Trunk Group/Member: 078/001            Service State: in-service/idle
              Port: 01C1505         Maintenance Busy? no
Signaling Group ID:                      CA-TSC State:
   Connected Ports:
```

Field descriptions (group/member)

`Trunk Group/Member`	Trunk group number/group member number (1-99/1-99)
`Port`	Port location (cabinet-carrier-slot-circuit)
`Signaling Group ID`	If trunk is ISDN, then this field displays the number of the ISDN Signaling Group to which this group belongs; otherwise, the field is blank.
`Connected Ports`	Port locations (cabinet-carrier-slot-circuit) connected to the trunk

Service State	Trunk service state: in-service/active, in-service/idle, out-of-service-NE, out-of-service-FE, maint-NE/active, maint-FE/active, maint-NE/idle, and maint-FE/idle. NE (Near End; switch) and FE (Far End; PRI terminal adapter or any device that terminates the D-channel signaling) refer to which “end” of the B-channel has placed the facility in the current state.
Maintenance Busy	Whether any maintenance testing is being performed
CA-TSC State	State of the temporary signaling connection (used to pass call information over PRI signaling links)

Group only

The following example shows the output from the **status trunk 78** (trunk group only) command.

```
status trunk 78


                        TRUNK GROUP STATUS

Member   Port    Service State    Mtce Connected Ports
                                  Busy
078/001  01C1505 in-service/idle  no
078/002  01C1506 in-service/idle  no
```

Field descriptions

Member	Trunk group number/group member number (1-99/1-99).
Port	Port location (cabinet-carrier-slot-circuit)
Service State	Trunk service state: in-service/active, in-service/idle, out-of-service-NE, out-of-service-FE, maint-NE/active, maint-FE/active, maint-NE/idle, and maint-FE/idle. NE (Near End; switch) and FE (Far End; PRI terminal adapter or any device that terminates the D-channel signaling) refer to which “end” of the B-channel has placed the facility in the current state.
Mtce Busy	Whether any maintenance testing is being performed
Connected Ports	Port locations (cabinet-carrier-slot-circuit) connected to the trunk

status tsc-administered

The status tsc-administered command displays the operational status of TSC's administered for an administered signaling group. The status represents the state of the TSC according to switched services.

Action/Object	Qualifier	Qualifier Description	Permissions	Defaults	Feature Interactions
status tsc-administered	***signaling group***	Administered signaling group number	init inads craft	none	none
	#/tsc index	Number associated with each TSC in a signaling group			
	print	Report sent to printer			
		Examples: **status tsc-administered 1** **status tsc-administered 1/1** **status tsc-administered 1/2 print**			

Output

The following example shows the output for the **status tsc-administered 1/1** command.

```
status tsc-administered 1/1


         ADMINISTERED NON-CALL-ASSOCIATED TSC STATUS

TSC      TSC
Index    State        Establish   Enabled   Congested
1        inactive     as-needed   yes       no
```

Field descriptions

`TSC Index` The administered TSC index (1-64).

`TSC State` State of the administered TSC:

- `inactive`: the administered TSC is not functioning (for example, D-channel out-of-service, or disabled)
- `active`: indicates that the administered TSC is up and user information can be exchanged end-to-end.
- `pending-inactive`: shows that the TSC is being released.
- `pending-active`: the TSC is about to come up

`Establish` The switch responsible for the origination of the administered TSC:

- `as-needed`: TSC is established on an as needed basis
- `permanent`: TSC is permanently established

`Enabled` Indicates if the administered TSC's have been enabled ("yes" or "no").

`Congested` Administered TSC congestion history (whether or not the network can handle the receipt of USER INFORMATION messages for the administered TSC):

- `yes`: TSC is congested
- `no`: TSC is not congested
- `clear`: TSC congestion was cleared during its active period

status tti

This command displays the status (active/not active) of the tti background maintenance task, and, if it is active, it displays whether tti ports are being generated or removed, the number of tti-supported boards that have processed, and the number of tti-supported boards that have not yet been processed. The display also includes the elapsed time since the background maintenance task started.

Action/ Object	Qualifier	Qualifier Description	Permissions	Defaults	Feature Interactions
status tti	***print***	Report sent to the printer Examples: **status tti** **status tti print**	init inads craft cust nms browse	none	TTI background maintenance task is activated by enabling the TTI system parameter on the System-parameters Features form.

Output

The following example shows the output for the **status tti** command.

```
status tti                              Page 1 of 1


                          TTI STATUS

        TTI Background Task State:  generating tti ports
                        TTI State:  voice
            # of Boards Completed:  30
      # of Boards Left to Process:  120
                 Percent Complete:  25
  Elapsed Time since Task Started:  0:15
```

Field descriptions

`TTI Background Task State:`

State of the tti background maintenance task:

- `generating tti ports`:
- `removing tti ports`:
- `suspended`:
- `not active`:
- `completed - all ports translated`: the last execution of the background task completed normally
- `completed - some ports not translated`: the task completed due to resource exhaustion with some ports left untranslated

`TTI State:`

The tti state: displays `off` (TTI feature not enabled for the system), or if enabled, then the field displays what kind of tti ports are being generated or removed (`voice`, `data`).

`# of Boards Completed:`

Number of TTI-supported boards that have been processed by the background maintenance task:

- `completed`: board has either had all its unadministered ports translated as TTI ports or its TTI ports have been removed and are now unadministered ports. This depends on whether the TTI background task is generating or removing tti ports.

`# of Boards Left to Process:`

Number of TTI-supported boards that have not yet been processed by the background maintenance task.

`Percent Complete:`

Ratio of the of number of boards completed compared to the number of boards left to process.

`Elapsed Time since Task Started:` Elapsed time since the TTI background task was started. If the task is “not active”, then this field is blank. If the task is “completed” it will indicate the length of time (hh:*mm* format) it took to complete the task. If the task is “suspended”, then it will display the elapsed time at the point the task was suspended.

test access-endpoint

This command performs hardware diagnostic tests on all port circuits that are associated with the specified access endpoint extension.

Action/ Object	Qualifier	Qualifier Description	Permissions	Defaults	Feature Interactions
test access-endpoint	***extension***	Access endpoint extension (# of digits determined by dial-plan)	init inads craft nms	Test sequence = short; repeat = 1	none
	short	Option for a brief series of nondestructive diagnostic tests.			
	long	Option for a longer, more comprehensive test series (includes a destructive test)			
	repeat number	How many times each test in the sequence is repeated (1-100)			
	clear	This option causes the test sequence (short or long) to repeat until the alarm (if any) is cleared or a single test in the sequence fails.[1]			
	schedule	Command is validated and then a scheduling form displays to schedule execution of the command. The command is then placed in the command queue and is executed at the specified time. The information displayed by the command is sent to the system printer instead of the screen.[2] Examples: **test access-endpoint 25012** **test access-endpoint 45002 sh** **test access-endpoint 45892 l** **test access-endpoint 24389 sh r 4** **test access-endpoint 34899 l r 6** **test access-endpoint 34912 l r 5 schedule** **test access-endpoint 93483 r 2** **test access-endpoint 10022 c** **test access-endpoint 92349 schedule**			

1. If no alarms are registered against the maintenance object then the test sequence is run only once. The ***long clear*** option forces a clear of all alarms if no errors are encountered during testing. The ***short clear*** option only clears alarms pertinent to tests in the short sequence.
2. Refer to the Report Scheduler and System Printer feature specification for more details.

Output

The following example shows the output for the **test access-endpoint 22502** command, and assumes the access endpoint ports for extension 22502 are in cabinet 1, carrier C, slot 11, circuit 1 to 6. The responses are displayed on a port-by-port and test-by-test basis with one line of data for each test result.

```
test access-endpoint 22502 short                    page 1 of 1


                              TEST RESULTS

  Port       Maintenance Name  Alt. Name Test No. Result      Error Code
  01C1101    WAE-PORT          22502       36     PASS
  01C1102    WAE-PORT          22502       36     PASS
  01C1103    WAE-PORT          22502       36     PASS
  01C1104    WAE-PORT          22502       36     PASS
  01C1105    WAE-PORT          22502       36     PASS
  01C1106    WAE-PORT          22502       36     PASS


Command Successfully Completed
```

Field descriptions

Port	Port address (cabinet-carrier-slot-circuit)
Maintenance Name	The name of maintenance object (wideband access endpoint = WAE-PORT; single port access endpoint = TIE-DS1)
Alt. Name	The extension number of the access endpoint
Test No	The test being executed
Result	Test result: Pass, Abort, Fail, No Board, Disabled
Error Code	Numeric code explaining why the release failed or aborted. Refer to the detailed list of the codes by test number for each MO.

test alarms

This command allows automatic testing all of the hardware associated with the active alarms in the alarm log. This command provides an initial query form to help the user narrow the selection of alarmed objects. After submitting the query form, the system tests the hardware associated with the selected alarm log entries. The results display in standard test output and status information display on the message line as the command progresses.

Several alarms may be logged against a single maintenance object, each alarm representing a different problem. Even if there are multiple entries in the alarm

log for a single object, the **test alarms** command only tests each physical object once.

Action/ Object	Qualifier	Qualifier Description	Permissions	Defaults	Feature Interactions
test alarms	***auto-page***	New screen displays when current screen fills[1]	init inads craft nms	Test sequence = short; repeat = 1	See below
	failures	Only the failures (hardware, aborts, conflicts, EPN-down) display			
	step	Allows "stepping" to the next or previous alarm (current alarm not tested)[2]			
	short	Option for a brief series of nondestructive diagnostic tests.			
	long	Option for a longer, more comprehensive test series (includes a destructive test)			
	repeat number	How many times each test in the sequence is repeated (1-100)			
	clear	This option causes the test sequence (short or long) to repeat until the alarm (if any) is cleared or a single test in the sequence fails.[3]			
	schedule	Command is validated and then a scheduling form displays to schedule execution of the command. The command is then placed in the command queue and is executed at the specified time. The information displayed by the command is sent to the system printer instead of the screen.[4] Examples: **test alarms** **test alarms step failures** **test alarms long clear auto-page** **test alarms long failures**			

1. If ***auto-page*** option is not specified, the screen does not refresh once filled, and testing stops until the user presses PAGE (continue) or CANCEL (halts testing).
2. Press CANCEL to abort the command, ENTER to test the currently displayed alarm, NEXT ALARM (function key) to move to the next alarm, and PREV ALARM (function key) to move to the previous alarm without testing the currently displayed alarm. If this option is entered, then the NEXT ALARM (function key) or PREV ALARM (function key) can be pressed at any time during the command, even during test results. If NEXT ALARM or PREV ALARM is pressed during a test, the test is aborted, testing of the current alarm stops, and the next or previous alarm displays. If the first alarm is displayed and PREV ALARM is pressed, then the last alarm is displayed. If the last alarm is currently displayed and the NEXT ALARM is requested, then the first alarm displays. The only way to terminate this command is to press CANCEL**.**
3. If no alarms are registered against the maintenance object then the test sequence is run only once. The ***long clear*** option forces a clear of all alarms if no errors are encountered during testing. The ***short clear*** option only clears alarms pertinent to tests in the short sequence. SEE WARNINGS BELOW.
4. Refer to the Report Scheduler and System Printer feature specification for more details.

WARNING:
Executing a clear with short option may not clear all alarms, even if all tests pass.

WARNING:
Since the "clear long" options clear all counters if tests pass, it is possible for firmware counters to be cleared even when a problem exists. In some cases customer service might degrade since calls may be routed over defective equipment.

Feature Interactions

With the enhancement of multiple maintenance users, there may be a possibility of two users attempting to test the same physical hardware (for example, one using the **test alarms** command and another using the **test board** command). If this command attempts to test a board that is currently being tested by another user, a error message displays.

Options form

After entering the **test alarms** command, you are presented with an options form for alarm selection.

```
test alarms repeat 1


             HARDWARE TEST ALARM QUERY

    The following options control which alarms will be tested.

    ALARM TYPES
          Major? y_     Minor? y_    Warning? y_

        REPORT PERIOD
         Interval: m_  From: __/__/__:__  To: __/__/__:__

    EQUIPMENT TYPE ( Choose only one, if any, of the following )
                           Cabinet: __
                      Port Network: __
                      Board Number: ____
                              Port: ______
                          Category: ________
                         Extension: _____
             Trunk ( group/member ): __/__
```

Field descriptions (Hardware Test Alarm Query)

`Alarm Types` The type of alarm to be tested: put **y** or **n** in the field(s) to selects one or a combination of alarms.

`Interval` Tests alarms for the last hour (**h**), last day (**d**), last week (**w**) or all (**a**) [default].

`From` Test alarm from the specified time specified (*mm*/*dd*/*hh*/*mm*). If no `from` date is entered, then no checking is done and the alarms active since a month prior to the current time are reported.

`To` Test alarms associated with records to the specified time specified (*mm*/*dd*/*hh*/*mm*). If no `to` date is entered, any alarm active after the `from` date is selected.

`Equipment Type` The technician can choose from five different equipment types. If there is no input to any of these fields, the system defaults to all the equipment. The user can select one of the following fields:

- `Cabinet`: tests alarms associated with a particular cabinet (1-3).
- `Port Network`: tests all alarms associated with a particular port network (1-3).
- `Board Number`: tests all alarms associated with a particular circuit pack (**PCSS**, default cabinet = 1).
- `Port`: tests all alarms associated with a particular port on a circuit pack (**PCSSpp**, default cabinet = 1).
- `Category`: Alarms for a particular equipment category
- `Extension`: Alarms associated with an extension number
- `Trunk` (group/member): tests all alarms associated with a particular trunk group or trunk group member, *XX*/*YY*, where the group identifier tests all alarms associated with a trunk group (*XX*/__), and the group identifier *and* member identifier are both entered to test all alarms associated with a specific trunk group member (*XX*/*YY*).

Output

The following example shows the output from the **test alarms** command (query form left empty by pressing ENTER). The responses display on a test-by-test basis with one line of data for each test result.

```
test alarms                                                          Page   1

                                   ALARM ENTRY
Port       Maintenance On   Alt     Alarm   Svc    Ack?  Date        Alarm
           Name        Brd? Name    Type    State  1 2   Alarmed     Count

01C03      UDS1-BD     n            WARNING               03/06/16:48 1/4

                                   TEST RESULTS
Port      Maintenance Name  Alt. Name Test No. Result            Error Code

01C03     UDS1-BD                     138      NO BOARD
01C03     UDS1-BD                     139      NO BOARD
01C03     UDS1-BD                     140      NO BOARD
01C03     UDS1-BD                     141      NO BOARD
01C03     UDS1-BD                     142      NO BOARD
01C03     UDS1-BD                     143      NO BOARD
01C03     UDS1-BD                     144      NO BOARD
01C03     UDS1-BD                     145      NO BOARD
01C03     UDS1-BD                     146      NO BOARD
Testing completed for this object.

                press CANCEL to quit --  press NEXT PAGE to continue
```

Field descriptions

When encountering errors in preparing a particular object to be tested (not inserted, contention, etc.), an error message display in the `TEST RESULTS` section of the output form.

ALARM ENTRY section

`Port`	Port location of alarmed object (cabinet-carrier-slot-circuit); same identifier as alarm log
`Maintenance Name`	The name of the maintenance object
`On Board`	Fault detected is on the associated circuit pack (y) or off board (o).
`Alt Name`	Terminal extension numbers or trunk group numbers
`Alarm Type`	Major, Minor, or Warning
`Service State`	Current service state of the station and trunk ports: `RDY` (ready for service), `OUT` (out of service), or `IN` (in service).
`Ack`	Whether alarm has been acknowledged by the first and second OSS telephone numbers, respectively.
`Date Alarmed`	Day, hour, and minute of alarm.
`Alarm Count`	Count of the current alarm entry versus the total number of alarms to be tested.

Test results section	
Port	Port address (cabinet-carrier-slot-circuit)
Maintenance Name	The name of maintenance object
Alt. Name	Alternate way to identify maintenance objects.

If the Object is	The field contains
station	extension
trunk	*xxx/yyy* (where *xxx* = trunk group number and *yyy* = member number)
private CO line	*P/xxx* (where *xxx* = private CO line group number)

Test No	The test being executed
Result	Test result: Fail, Pass, Abort, or No Board. If this field has conflict, another user may be testing this hardware.
Error Code	Numeric code explaining why the release failed or aborted. Refer to the detailed list of the codes by test number for each MO.

test analog-testcall

This command performs facility diagnostic tests on an entire trunk group, an individual trunk group member, an individual trunk port, or on all trunks on a board, depending on the options entered. The type of test call, the far-end test line number, and the various other parameters must be administered on the trunk group form before executing the command. Normally, the user should only invoke the full or supervision test. The other options are provided primarily for testing when setting up an ATMS schedule.

Action/ Object	Qualifier	Qualifier Description	Permissions	Defaults	Feature Interactions
test analog-testcall	***full***	Executes the most comprehensive test call available using the administered test set type.	init inads craft cust	Test sequence = long; repeat = 1	See below
	no super-vision	Executes a supervision-only test call (approx. 10 sec.) and confirms the presence of the test set at the far end.			
	no-selftest	Executes the “full” test (skips any self-test sequences), saving about 20 seconds on the type 105 transmission test and has no effect on type 100 or 102 transmission tests.			
	no-return-loss	Executes the “full” test (skips any return loss sequences), saving about 20 seconds on the type 105 transmission test and does not have any effect on type 100 or 102 transmission tests.			
	no-st-or-rl	Executes the “full” test (skips all self test and return loss sequences), saving about 40 seconds on the type 105 transmission test and does not have any effect on type 100 or 102 transmission tests.			
	repeat number	How many times each test in the sequence is repeated (1-100)			
	schedule	Command is validated and then a scheduling form displays to schedule execution of the command. The command is then placed in the command queue and is executed at the specified time. The information displayed by the command is sent to the system printer instead of the screen.[1] Examples: **test analog-testcall trunk 78 f** **test analog-testcall trunk 78 f schedule** **test analog-testcall trunk 80/1 s r 2** **test analog-testcall trunk 80/1 s r 2 schedule** **test analog-testcall trunk 78/2 no-selftest r 10** **test analog-testcall trunk 78/2 no-selftest r 10 schedule** **test analog-testcall trunk 78 r 4** **test analog-testcall trunk 78 r 4 schedule** **test analog-testcall port 2a1505 no-st-or-rl r 4** **test analog-testcall port 2a1505 no-st-or-rl r 4 schedule** **test analog-testcall board 2a15** **test analog-testcall board 2a15 schedule** **test analog-testcall port 2a1505 no-return-loss** **test analog-testcall port 2a1505 no-return-loss schedule** **te an t 80** **te an t 80 schedule**			

1. Refer to the Report Scheduler and System Printer feature specification for more details.

Feature Interactions

- Additional data is available after running a test. See the "list measurements" command with the ***test-call*** option for details on how to access the additional data.
- If the trunk is in use by call processing, the test aborts.
- If the trunk is in use by maintenance, the test queues and runs when the current maintenance activity finishes.

Output

The following example shows the output for the **test analog-testcall trunk 78** command. The responses display on a test-by-test basis with one line of data for each test result.

```
test analog-testcall trunk 78


                           TEST RESULTS

  Port      Maintenance Name  Alt. Name Test No. Result       Error Code
  01C1505   CO-TRK             78/1     845      PASS
  01C1507   CO-TRK             78/2     845      PASS


Command Successfully Completed
```

Field descriptions

`Port` The port address (cabinet-carrier-slot-circuit) of the maintenance object that is being tested.

`Maintenance Name` The type of maintenance object that is being tested.

`Alt. Name` Alternate way to identify maintenance objects.

If the Object is	The field contains
trunk	*xxx/yyy* (where *xxx* = trunk group number and *yyy* = member number)

`Test No.` The test being executed

`Result` Test result: Pass, Fail, Abort, Disabled, No Board, or Extra Board.

`Error Code` Numeric code explaining why the release failed or aborted. Refer to the detailed list of the codes by test number for each MO.

test board

This command performs a set of hardware diagnostic tests on a specified circuit pack. The system first validates that the board exists at the specified location. Then, based on the logical type of board (for example, Analog, Digital, Hybrid, and others), a series of tests perform diagnostics on the board and then returns results of the test along with any possible error codes. Some of the tests can be disabled by administration.

For the R6csi system, the **test board 01A01** command tests all of the components associated with the processor circuit pack except for environmental components and system links, which require the **test environment** and test **sys-link** commands, respectively. The processor components are tested in the following order: PROCR, PR-MEM, SW-CTL, PKTINT, DATA-BD, DATA-CHL, 12V-PWR, CARD-MEM, and PR-MAINT.

Action/ Object	Qualifier	Qualifier Description	Permissions	Defaults	Feature Interactions
test board	***location***	Physical location of the board **PCSS**	init inads craft nms	Test sequence = short; repeat = 1	none
	short	Option for a brief series of nondestructive diagnostic tests.			
	long	Option for a longer, more comprehensive test series (includes a destructive test)			
	repeat number	How many times each test in the sequence is repeated (1-100)			
	clear	This option causes the test sequence (short or long) to repeat until the alarm (if any) is cleared or a single test in the sequence fails.[1]			
	schedule	Command is validated and then a scheduling form displays to schedule execution of the command. The command is then placed in the command queue and is executed at the specified time. The information displayed by the command is sent to the system printer instead of the screen.[2] Examples: **test board 01c11 l** **test board 01c11 l schedule** **test board 02b15 sh r 2** **test board 01c08** **test board 02d12 r 4** **test board 02d12 c**			

1. If no alarms are registered against the maintenance object then the test sequence is run only once. The ***long clear*** option forces a clear of all alarms if no errors are encountered during testing. The ***short clear*** option only clears alarms pertinent to tests in the short sequence. SEE WARNING BELOW.

2. Refer to the Report Scheduler and System Printer feature specification for more details.

WARNING:
Since the "clear long" options clear all counters if tests pass, it is possible for firmware counters to be cleared even when a problem exists. In some cases customer service might degrade since calls may be routed over defective equipment.

Feature Interactions

Destructive long tests on a Switch Node Interface (SNI) board are not allowed unless the board has first been busied out.

Output

The following example shows the output from the **test board 1c07 short** command. The responses display on a test-by-test basis with one line of data for each test result.

```
test board 01C07 short


                          TEST RESULTS

  Port      Maintenance Name  Alt. Name Test No. Result       Error Code
  01C07     ANL-BD                      51       PASS
  01C07     ANL-BD                      52       PASS
  01C0703   ANL-LINE                    35       PASS
  01C0703   ANL-LINE                    48       PASS
  01C0703   ANL-LINE                    36       PASS
  01C0701   ANL-LINE                    35       PASS
  01C0701   ANL-LINE                    48       PASS
  01C0701   ANL-LINE                    36       PASS
  01C0702   ANL-LINE                    35       PASS
  01C0702   ANL-LINE                    48       PASS
  01C0702   ANL-LINE                    36       PASS


Command Successfully Completed
```

Field descriptions

`Port`	Port address (cabinet-carrier-slot-circuit)
`Maintenance Name`	The name of maintenance object
`Alt. Name`	Alternate way to identify maintenance objects.

If the Object is	The field contains
station	extension
trunk	*xxx/yyy* (where *xxx* = trunk group number and *yyy* = member number)
private CO line	*P/xxx* (where *xxx* = private CO line group number)

`Test No`	The test being executed
`Result`	Test result: Pass, Fail, Abort, Disabled, No Board, or Extra Board.
`Error Code`	Numeric code explaining why the release failed or aborted. Refer to the detailed list of the codes by test number for each MO.

test card-mem

This command executes a sequence of tests on the memory card in the specified switch processor element. The test sequences in order for both long and short options are listed in the following table:

Test	Short	Long
12 Volt Power Supply Test (#701)	X	X
Memory Card Insertion Test (#695)	X	X
Memory Card Format and Read Test (#696)	X	X
Memory Card Match Test (#697)	X	X
Memory Card Write-Protected Test (#698)	X	X
Memory Card Directory Recovery Test (#699)	X	X
Memory Card Translation Data Integrity Test (#694)		X
Memory Card Erase/Write/Read Test (#693)		X
Memory Card Capacity Test (#1014)		X

These tests verify the sanity of the memory card device, the basic read/erase/write operations to the memory card, the integrity of the translation data stored in the memory card, the function of 12-volt power supply used for memory card erase/write operations, and the translation capacity of the memory card. This command can also help troubleshoot the following hardware errors: CARD-MEM, 12V-PWR, CAP-MEM, and FL-DATA.

Action/Object	Qualifier	Qualifier Description	Permissions	Defaults	Feature Interactions
test card-mem	***location***	Carrier location where memory card resides: (***a***)	init inads craft	Test sequence = short; repeat = 1	See below
	short	Option for a brief series of nondestructive diagnostic tests.			
	long	Option for a longer, more comprehensive test series (includes a destructive test)			
	repeat number	How many times each test in the sequence is repeated (1-100)			
	clear	This option causes the test sequence (short or long) to repeat until the alarm (if any) is cleared or a single test in the sequence fails.[1]			
	schedule	Command is validated and then a scheduling form displays to schedule execution of the command. The command is then placed in the command queue and is executed at the specified time. The information displayed by the command is sent to the system printer instead of the screen.[2] Examples: **test card-mem** **test card-mem a l** **test card-mem b sh r 2** **test card-mem a sch** **test card-mem a c**			

1. If no alarms are registered against the maintenance object then the test sequence is run only once. The ***long clear*** option forces a clear of all alarms if no errors are encountered during testing. The ***short clear*** option only clears alarms pertinent to tests in the short sequence. SEE WARNING BELOW.
2. Refer to the Report Scheduler and System Printer feature specification for more details.

WARNING:
Since the "clear long" option clears all counters if tests pass, it is possible for firmware counters to be cleared even when a problem exists. In some cases customer service might degrade since calls may be routed over defective equipment.

Feature Interactions

The **test card-mem long** command invokes the Memory Card Erase/Write/Read Test. This means that the **save translation** and **save announcement** commands are rejected while the write-to-memory-card operation is active. This test also invokes the Memory Card Capacity Test which determines whether the memory card is more than 98% full. This test is also invoked after the **save translation** command.

Output

The following example shows the output from the **test card-mem a long** command. The responses display on a test-by-test basis with one line of data for each test result.

```
test card-mem a long                              SPE A


                  TEST RESULTS

  Port    Maintenance Name  Alt. Name Test No. Result      Error Code
  01A     12V-PWR                      701      PASS
  01A     CARD-MEM                     695      PASS
  01A     CARD-MEM                     696      PASS
  01A     CARD-MEM                     697      PASS
  01A     CARD-MEM                     698      PASS
  01A     CARD-MEM                     699      PASS
  01A     CARD-MEM                     694      PASS
  01A     CARD-MEM                     693      PASS
  01A     CAP-MEM                     1014      PASS

Command successfully completed
```

Field descriptions

`Port` — Port address (1A). The slot and circuit fields in the port address for the 12V-PWR, CAP-MEM, and CARD-MEM maintenance objects are always blank.

`Maintenance Name` — The name of maintenance object being tested:

- CARD-MEM for the memory card
- 12V-PWR for 12-volt power supply in TN777B NETCON board
- CAP-MEM for memory card capacity
- FL-DATA for the data consistency stored in memory cards (duplicated switch)

`Test No` — The test being executed

`Result` — Test result: Pass, Fail, or Abort

`Error Code` — Numeric code explaining why the release failed or aborted. Refer to the detailed list of the codes by test number for each MO.

test cdr-link

This command first validates that the Call Detail Recording (CDR) link has been administered and exists in the switch. Then individual diagnostic tests run on the link and return results of the test along with any possible error codes. For more information on the CDR link, see the description for the "status cdr-link" command.

Action/ Object	Qualifier	Qualifier Description	Permissions	Defaults	Feature Interactions
test cdr-link	***link-id***	Link-id = ***primary*** or ***secondary***	init inads craft	Test sequence = short; repeat = 1	none
	short	Option for a brief series of nondestructive diagnostic tests.			
	long	Option for a longer, more comprehensive test series (includes a destructive test)			
	repeat number	How many times each test in the sequence is repeated (1-100)			
	clear	This option causes the test sequence (short or long) to repeat until the alarm (if any) is cleared or a single test in the sequence fails.[1]			
	schedule	Command is validated and then a scheduling form displays to schedule execution of the command. The command is then placed in the command queue and is executed at the specified time. The information displayed by the command is sent to the system printer instead of the screen.[2] Examples: **test cdr-link primary l** **test cdr-link secondary sh r 2** **test cdr-link primary** **test cdr-link secondary** **test cdr-link secondary c** **test cdr-link primary schedule**			

1. If no alarms are registered against the maintenance object then the test sequence is run only once. The ***long clear*** option forces a clear of all alarms if no errors are encountered during testing. The ***short clear*** option only clears alarms pertinent to tests in the short sequence.
2. Refer to the Report Scheduler and System Printer feature specification for more details.

Output

The following example shows the output for the **test cdr-link primary** command. The responses display on a test-by-test basis with one line of data for each test result.

```
test cdr-link primary short


                          TEST RESULTS

  Port    Maintenance Name  Alt. Name Test No. Result       Error Code
          PRI-CDR                     215      PASS


Command Successfully Completed
```

Field descriptions

`Port`	Not applicable (always blank)
`Maintenance Name`	The type of MO being tested: primary cdr-link= PRI-CDR; secondary cdr-link = SEC-CDR
`Alt. Name`	Not applicable (always blank)
`Test No`	The test being executed
`Result`	Test result: Pass, Abort, Fail, Disabled
`Error Code`	Numeric code explaining why the release failed or aborted. Refer to the detailed list of the codes by test number for each MO.

test customer-alarm

This command performs hardware diagnostic tests on the leads of the Processor and EPN maintenance circuit packs, used for customer-provided alarms by closing the appropriate relay for 1 minute. Failure is verified by checking the customer alarm attached to the specified circuit pack.

Action/Object	Qualifier	Qualifier Description	Permissions	Defaults	Feature Interactions
test customer-alarm	***location***	Extension of the data module or data channel to be tested (per dial-plan)	init inads craft	See below	none
	short	Runs test number 115			
	long	Runs test number 115 (same as short test option)			
	repeat number	How many times each test in the sequence is repeated (1-100)			
	clear	This option causes the test sequence (short or long) to repeat until the alarm (if any) is cleared or a single test in the sequence fails.[1]			
	schedule	Command is validated and then a scheduling form displays to schedule execution of the command. The command is then placed in the command queue and is executed at the specified time. The information displayed by the command is sent to the system printer instead of the screen.[2] Examples: **test customer-alarm** **test customer-alarm schedule** **test customer-alarm 02 r 2** **test customer-alarm 01b r 25** **test customer-alarm 01b r 25 schedule** **test customer-alarm 2a** **test customer-alarm 2a sh** **test customer-alarm 01b l schedule** **test customer-alarm 3 c**			

1. If no alarms are registered against the maintenance object then the test sequence is run only once. The ***long clear*** option forces a clear of all alarms if no errors are encountered during testing. The ***short clear*** option only clears alarms pertinent to tests in the short sequence.
2. Refer to the Report Scheduler and System Printer feature specification for more details.

Defaults

The default cabinet is cabinet 1, and the default carrier is “a.” The default for the remaining parameter is a repeat of 1.

Output

The following example shows the output from the **test customer-alarm 02a** command.

```
test customer-alarm 02A


                                TEST RESULTS

  Port    Maintenance Name  Alt. Name Test No. Result       Error Code
  02A     CUST-ALM                    115      PASS


Command Successfully Completed
```

Field Definitions

Port	The port address (cabinet-carrier-slot)
Maintenance Name	The maintenance name (always CUST-ALM)
Alt. Name	Not applicable
Test No.	The test number (always 115)
Result	Test result: Pass, Abort, or Fail
Error Code	Numeric code explaining why the release failed or aborted. Refer to the detailed list of the codes by test number for each MO.

test data-module

This command performs hardware diagnostic tests on a data module or data channel. Test results are determined by the interface to the digital switch-data line port, digital line port, or network control data channel.

Action/ Object	Qualifier	Qualifier Description	Permissions	Defaults	Feature Interactions
test data-module	***extension***	Extension of the data module or data channel to be tested (per dial-plan)	init inads craft cust nms	Test sequence = short; repeat = 1	none
	short	Option for a brief series of nondestructive diagnostic tests.			
	long	Option for a longer, more comprehensive test series (includes a destructive test)			
	repeat number	How many times each test in the sequence is repeated (1-100)			
	clear	This option causes the test sequence (short or long) to repeat until the alarm (if any) is cleared or a single test in the sequence fails.[1]			
	schedule	Command is validated and then a scheduling form displays to schedule execution of the command. The command is then placed in the command queue and is executed at the specified time. The information displayed by the command is sent to the system printer instead of the screen.[2] Examples: **test data-module 30000 l** **test data-module 30000** **test data-module 32000 sh r 2** **test data-module 33000 l r 25** **test data-module 33000 l r 25 schedule** **test data-module 30000 c**			

1. If no alarms are registered against the maintenance object then the test sequence is run only once. The ***long clear*** option forces a clear of all alarms if no errors are encountered during testing. The ***short clear*** option only clears alarms pertinent to tests in the short sequence. SEE WARNING BELOW.
2. Refer to the Report Scheduler and System Printer feature specification for more details.

WARNING:
Since the "clear long" options clear all counters if tests pass, it is possible for firmware counters to be cleared even when a problem exists. In some cases customer service might degrade since calls may be routed over defective equipment.

Output

The following example shows the output from the **test data-module 300** command. The responses display on a test-by-test basis with one line of data for each test result.

```
test data-module 300


                              TEST RESULTS

  Port      Maintenance Name  Alt. Name Test No. Result       Error Code
  01C1103   PDMODULE                       17     PASS


Command successfully completed
```

Field Definitions

`Port`	Port address (cabinet-carrier-slot-circuit)
`Maintenance Name`	The name of maintenance object
`Alt. Name`	Alternate way to identify maintenance objects.

If the Object is	The field contains
station	extension
trunk	*xxx/yyy* (where *xxx* = trunk group number and *yyy* = member number)
private CO line	*P/xxx* (where *xxx* = private CO line group number)

`Test No`	The test being executed
`Result`	Test result: Pass, Fail, Abort, No Board
`Error Code`	Numeric code explaining why the release failed or aborted. Refer to the detailed list of the codes by test number for each MO.

test ds1-loop

This command validates that the board exists at the specified location and that the board is a TN464F or TN767E or later suffix DS1 Interface board. Long-duration loopback tests execute for an extended period of time until manually terminated. Short-duration loopback tests return the result of the test to the screen after executing. The **list measurements ds1 summary** command can be used to monitor the status of a long-duration loopback/span test.

Action/ Object	Qualifier	Qualifier Description	Permissions	Defaults	Feature Interactions
test ds1-loop	***location***	Physical location of board (**PCSS**)	init inads craft super-user other[3]	ds1/csu-loopback-tests	See below
	cpe-loopback-jack-test-begin	Long-duration loopback test setup through the Customer Premises Equipment (CPE) Loopback Jack. Allows user to specify a loop-up code for the CPE loopback jack if it differs from the default (0x47F). The loop-up code is entered by specifying the number of bits in the loop-up code as well as the actual hexadecimal bit-pattern.[1]			
	far-csu-loopback-test-begin	Long-duration loopback test setup through the far-end Channel Service Unit (CSU)			
	one-way-span-test-begin	Long-duration one-way span test			
	end-loopback/ span-test	Terminates long-duration one-way span and loopback testing			
	inject-single-bit-error	Single bit error sent within an active framed 3-in-24 test pattern used in long-duration loopback and span testing			
	ds1/csu-loopback-tests	Sequentially executes the following loopback tests: DS1 Board LoopBack, CSU Module Equipment LoopBack, and CSU Module Repeater LoopBack.[2] Examples: **test ds1-loop 01c08** **test ds1-loop 1-3c03 cpe-loopback-jack** **test ds1-loop 1-3c03 cpe** **test ds1-loop 10c03 end** **test ds1-loop 02d12 fa** **test ds1-loop 02d12 inj**			

1. For TN464F or TN767E or later suffix DS1 boards only. The test aborts if the board has not been taken out of service with the **busyout** command.
2. For TN464F or TN767E or later suffix DS1 boards
3. Logins with `Maintain Switch Circuit Packs` permissions enabled.

Feature Interactions

- Loopback or span tests are not allowed on DS1 boards unless the board has been busied out.
- Only one of the CPE Loopback Jack, far-end CSU, one-way span, or DS1/CSU loopback tests may be active at any given time on a DS1 span.

Output

The following example shows the output for the **test ds1-loop 1c07** command, and assumes that the board in cabinet 1, carrier c, slot 7 is a TN767E DS1 board. The responses display on a test-by-test basis with one line of data for each test result.

```
test ds1-loop 01C07 ds1/csu-loopback-tests


                                  TEST RESULTS

  Port      Maintenance Name  Alt. Name Test No. Result       Error Code
  01C07     DS1-BD                      1209     PASS
  01C07     DS1-BD                      1210     PASS
  01C07     DS1-BD                      1211     PASS


Command Successfully Completed
```

Field descriptions

`Port`	Port address (cabinet-carrier-slot-circuit)
`Maintenance Name`	The name of maintenance object
`Alt. Name`	The alternate means of identifying the maintenance object.
`Test No`	The test being executed
`Result`	Test result: Pass, Abort, Fail, No Board, Disabled, or Extra Bd
`Error Code`	Numeric code explaining why the release failed or aborted. Refer to the detailed list of the codes by test number for each MO.

test eda-external-device-alrm

This command performs a hardware diagnostic test on all or specific port's administered external device alarms. The test PASSES if the external device *is not* reporting an external device alarm and FAILS if the external device *is* reporting an external device alarm. If you are entering a specific port, it must already be administered as an external device alarm port on a maintenance or an analog line port carrier board.

Action/Object	Qualifier	Qualifier Description	Permissions	Defaults	Feature Interactions
test eda-external-device-alrm	***physical location***	In addition to the word **physical**, you must enter the physical location (**PCSSpp** for an administered external device alarm analog line port).[1]	init inads craft	Repeat = 1	none
	all	Tests all administered external device alarm ports on analog line and maintenance boards.			
	repeat	How many times each test in the sequence is repeated (1-100)			
	clear	This option causes the test sequence (short or long) to repeat until the alarm (if any) is cleared or a single test in the sequence fails.[2]			
	schedule	Command is validated and then a scheduling form displays to schedule execution of the command. The command is then placed in the command queue and is executed at the specified time. The information displayed by the command is sent to the system printer instead of the screen.[3] Examples: **test eda-external-device-alrm all** **test eda-external-device-alrm all schedule** **test eda-external-device-alrm physical 1major r 10** **test eda-external-device-alrm physical 2c1101 c**			

1. Since the “maintenance board” alarm connections connect to control carrier boards that are in unnumbered slots, the standard port format cannot be used to designate these alarm connections. The special ports **Pmajor** and **Pminor** are used designate the major or minor maintenance board alarm connection for cabinet **P**. The major/minor designation specifies the pair of wires, *not* the alarm level associated with the connection (the “major” port can be administered as a major, minor or warning alarm and the “minor” port can be administered as a major, minor or warning alarm).
2. If no alarms are registered against the maintenance object then the test sequence is run only once. The ***long clear*** option forces a clear of all alarms if no errors are encountered during testing. The ***short clear*** option only clears alarms pertinent to tests in the short sequence.
3. Refer to the Report Scheduler and System Printer feature specification for more details.

Output

The following example shows the output for the **test external-device-alarm all** command. The responses display on a test-by-test basis with one line of data for each test result.

```
test eda-external-device-alarm all

                              TEST RESULTS

  Port      Maintenance Name  Alt. Name Test No. Result           Error Code

  01major   EXT-DEV           UPS1      120      PASS
  01minor   EXT-DEV           UPS1      120      PASS
  01c1201   EXT-DEV           UPS1      120      PASS
  01c1202   EXT-DEV           Audix1    120      PASS



Command successfully completed
```

Field definitions

`Port`	Port address (cabinet-carrier-slot-circuit)
`Maintenance Name`	The name of the maintenance object
`Alt. Name`	The alternate means of identifying the maintenance object, in this case, the administered (descriptive) name of the external device alarm.
`Test No`	The test being executed
`Result`	Test result: Pass, Abort, Fail, No Board, Disabled, or Extra Bd.
`Error Code`	Numeric code explaining why the release failed or aborted. Refer to the detailed list of the codes by test number for each MO.

test environment

This command performs hardware diagnostic tests of the environment monitoring and control, and emergency transfer functions of the Processor Port Network (PPN) cabinet. Circuit packs involved are the Processor (PPN simplex systems) and the Duplication Interface circuit packs. The tone/clock circuit pack is involved in tests of the ring generator.

There are 8 Maintenance Objects involved in this testing:

1. CABINET tests air flow and temperature
2. EMG-XFER tests emergency transfer status

3. EXT-DEV tests external (AUDIX, for example) alarm status for both the SCC and MCC cabinet systems.
4. RING_GEN tests ringing voltage are tested in MCC cabinets only.

NOTE:
The processor carrier is not be recycled. All port carriers are recycled, and service is interrupted for each port carrier. If a carrier containing an active tone-clock board is recycled, all ports in the cabinet or port network will have service disrupted.

Action/Object	Qualifier	Qualifier Description	Permissions	Defaults	Feature Interactions
test environment	***location***	Cabinet 1 = PPN	init inads craft	Cabinet = 1; test sequence = short; repeat = 1	See below
	short	Option for a brief series of nondestructive diagnostic tests.			
	long	Option for a longer, more comprehensive series of both destructive and nondestructive diagnostic tests.			
	repeat number	How many times each test in the sequence is repeated (1-100)			
	clear	This option causes the test sequence (short or long) to repeat until the alarm (if any) is cleared or a single test in the sequence fails.[1]			
	schedule	Command is validated and then a scheduling form displays to schedule execution of the command. The command is then placed in the command queue and is executed at the specified time. The information displayed by the command is sent to the system printer instead of the screen.[2] Examples: **test environment** **test environment schedule** **test environment 1 sh** **test environment 1 l r 25** **test environment 01 l r 25** **test environment 01 l r 25 schedule** **test environment 2 l c** **test environment 3 c**			

1. If no alarms are registered against the maintenance object then the test sequence is run only once. The ***long clear*** option forces a clear of all alarms if no errors are encountered during testing. The ***short clear*** option only clears alarms pertinent to tests in the short sequence.
2. Refer to the Report Scheduler and System Printer feature specification for more details.

Feature Interactions

- The long test recycles power in some specified cabinet on non-SPE and maintenance board carriers and is destructive. Specifically, the 'a' carrier of PPNs does not have power recycled.
- All port carriers are recycled, and service is interrupted for each port carrier.
- If a carrier containing an active tone-clock board is recycled, all ports in the cabinet or port network will have service disrupted.

Output

The following example shows the output for the **test environment 1** command to test a PPN cabinet. The responses display on a test-by-test basis with one line of data for each test result.

```
test environment 1


                            TEST RESULTS

  Port    Maintenance Name  Alt. Name Test No. Result       Error Code
  01      CABINET                     122      PASS
  01      EMG-XFER                    124      PASS
  01      EXT-DEV                     120      PASS
  01      EXT-DEV                     120      PASS
  01      RING-GEN                    117      PASS
  01      RING-GEN                    118      PASS


Command Successfully Completed
```

Field descriptions

`Port`	Port address (cabinet-carrier)
`Maintenance Name`	The name of maintenance object
`Alt. Name`	Not applicable
`Test No.`	The test being executed.
`Result`	Test result: Pass, Abort, Fail, Disabled
`Error Code`	Numeric code explaining why the release failed or aborted. Refer to the detailed list of the codes by test number for each MO.

test hardware-group

This command allows a user to perform a set of hardware diagnostic tests on the whole system, a carrier, cabinet, spe, or board. The tests vary according to the configuration of the system and the specified command options. Each test exercises diagnostics on all the hardware in the specified hardware group and reports results of the test along with any possible error codes. Concurrent testing is done to enhance performance, therefore, test results display on the SAT in the order they are received. Consequently, test results of one maintenance object may be intermixed with test results of other maintenance objects.

Because the tests for this command are not destructive, the tests performed on a particular maintenance object with either the ***short*** or the long ***option*** may not be the same as the corresponding demand tests.

A hardware-group command executing in the foreground may be cancelled by either pressing the CANCEL key or by entering the **cancel hardware-group** command at a different SAT. However, if the technician wants to cancel a **test hardware-group** command running in the background, the **cancel hardware-group** command can be entered on any SAT. A canceled **test hardware-group** command can be resumed at the point it left off by entering the **resume hardware-group** command. Restarts are not allowed for **test hardware-group** commands entered with either the ***all-ports*** option or the ***spe-interchange*** option.

Action/Object	Qualifier	Qualifier Description	Permissions	Defaults	Feature Interactions
test hardware-group	***system***	System-wide test of all hardware-groups	init inads	Test sequence = short; repeat = 1	See below
	carrier location	Carrier address: cabinet (1), carrier (A)[1]			
	cabinet location	Cabinet address (1)[2]			
	board location	Board location: **PCSS**[3]			
	print	Output sent to printer			
	schedule	Command validated and then a scheduling form displays to schedule execution of the command. The command is then placed in the command queue and is executed at the specified time. The information displayed by the command is sent to the system printer instead of the screen.[4] Examples: **test hardware-group system** **test hardware-group system print** **test hardware-group carrier 1a** **test hardware-group carrier 1a schedule** **test hardware-group board 01c07** **test hardware-group board 01c07 schedule** **test hardware-group spe** **test hardware-group spe print** **test hardware-group spe schedule**			

1. The type of carrier may be port, or processor. In the case of a port carrier, all universal port and tone-clock boards (see note 4) and its affiliated MOs residing in the specified carrier are tested. For a processor carrier, all SPE complex and tone-clock boards and affiliated MOs are tested.
2. All PN and PNC related MOs plus cabinet specific MOs, including maintenance boards and environment (ring generator, battery, power, emergency transfer, external alarms, fans, and temperature) are tested if they reside in the specified cabinet location.
3. All MOs on the specified 'board location' including ports are tested.
4. Refer to the Report Scheduler and System Printer feature specification for more details.

Feature Interactions

test hardware-group	Only one **test hardware-group** command can be active at any given time.

TTI	If the **test hardware-group** command is issued with the ***all-ports*** option when the TTI background task is active, some unadministered ports may not be tested. In addition, active alarms on line ports may be cleared by this task. The **status tti** command can be used to determine the state of the TTI background task.
Add Station	If a **add station** command is entered for an untranslated port at the same time as it is being tested as part of the **test hardware-group** command with the ***all-ports*** option, the error message, `Object in use; please try later` displays, and the request fails.
Trunk administration	If an attempt is made to add an unadministered trunk port to a trunk group at the same time as it is being tested as part of the **test hardware-group** with the ***all-ports*** option, the error message, `Object in use; please try later` displays, and the request fails.
Save translation	If the **test hardware-group** with the ***all-ports*** option while a **translation save** operation is active, some unadministered ports may not be tested. All other hardware will be tested normally.
Hardware alarms	When a hardware error is detected by the **test hardware-group** command, the hardware goes through the standard escalation strategy. Alarms are raised on hardware that manifest 'hard' errors. This alarming strategy is the same, regardless of whether the ports are translated or not.
System interaction	The performance of **test hardware-group** is affected by call processing traffic, administration activity, choice of the ***short*** or ***long*** option, whether the ***all-ports*** option is chosen, whether the ***spe-interchange*** option is chosen, and other demand maintenance activity.
Scheduled and periodic maintenance	While executing the **test hardware-group** command, all scheduled background maintenance, periodic background maintenance, and data audits activity is suspended until the command completes. When the **test hardware-group** command is canceled or completes, all suspended periodic, scheduled, and data audits background maintenance activity will be restarted where it left off.

Setting the Test Parameters

Once the user has entered the desired action (**test hardware-group**) and the object (board, carrier, etc.), then an options form displays.

```
test hardware-group system                          Page 1 of 1


            TEST HARDWARE-GROUP SELECTIONS

       Select the desired options for the specified test.
             Test sequence: short
           Test repetition: repeat        count: 1


        Output OPTIONS:                 HARDWARE OPTIONS:
         Auto-page? n                 All-ports? n
        Background? n           SPE-interchange? n
          Failures? n
```

Field descriptions

`Test sequence` — ***Short*** (nondestructive) or ***long*** (more comprehensive, still nondestructive) test sequence

`Test Repetition` — ***repeat*** - (1-99) each test is executed the number of times specified on each physical object.

continuously -all tests on all the specified hardware run until cancelled by either pressing the CANCEL key or by executing the **cancel hardware-group** command.

`count:` — Repeat test sequence value (1-99). If the `Test sequence` field is set to **continuously**, then this field disappears from the screen; if this field is set to **repeat**, then the field appears.

`Auto-page?` — Provides a new screen every time the SAT screen fills with test results. (***n*** / ***y***). The screen does not scroll to accommodate new results; instead a new screen is provided after the current screen fills up.

If the ***auto-page*** option is not selected, the SAT screen does not refresh once it is filled, and testing stops until the user enters the PAGE key to continue or the CANCEL key to cancel the testing.

This option is not allowed if the ***background*** option is selected.

`Background?` — Run the command in the background, thus freeing the SAT (***n*** / ***y***). The error results are tabulated in the error log, but no results display on the terminal.

This option cannot be used if either the ***continuously*** or the ***auto-page*** options are selected.

`Failures?` — Only failing test results display (***n*** / ***y***). Test results that pass or abort are not displayed. The ***failures*** option has no effect if entered with the ***background*** option.

`All-ports?` — Tests all customer translated line and trunk ports as well as a set of untranslated line and trunk ports for boards listed in Table 2-6 (***n*** / ***y***).

Table 2-6. Test of 'all ports' option for the following boards:

Board Number	Description	Board Number	Description
TN413	Digital Line	TN746	16 port Analog Line
TN417	Auxiliary Trunk	TN747B	Central Office Trunk
TN429	Direct Inward/ Outward Dialing Trunk	TN753	Direct-Inward-Dial Trunk
TN436	Direct Inward Dialing Trunk	TN754	Digital Line
TN437	Tie Trunk	TN760C	Tie Trunk
TN438	Central Office Trunk	TN762B	Hybrid Line
TN439	Tie Trunk	TN763C	Auxiliary Trunk
TN447	Central Office Trunk	TN767	DS1 Interface
TN458	Tie Trunk	TN769	Analog Line with Message Waiting
TN459	Direct Inward Dialing Trunk	TN784	Digital Line
TN464C	Universal DS1	TN785	16 port Analog Line
TN465	Central Office Trunk	TN2135	Italian 16 Port Analog Line
TN467	8 port Analog line	TN2136	Digital Line
TN468	16 port Analog line	TN2138	International Central Office Trunk
TN479	16 port Analog line	TN2139	Direct Inward Dialing Trunk
TN497	Tie Trunk	TN2140	Tie Trunk
TN556	ISDNBRI Line	TN2144	Analog Line
TN722B	DS1 Tie Trunk	TN2146	Direct Inward Dialing Trunk
TN726B	Data Line	TN2147	Central Office Trunk
TN735	MET Line	TN2149	Analog Line
TN742	8 port Analog Line	TN2180	16 port Analog line

`SPE-interchange?` Allow for planned interchange of duplicated SPEs and subsequent testing of both the active and standby SPEs.

Output

The following example shows the output for the **test hardware-group system** command and assumes that the board in port network 1, carrier c, slot 7 is an analog board with three administered ports and test sequence repeat = 3. Responses to this command running in the foreground display on a test-by-test basis with one line of data for each test result.

```
test hardware-group system


                                TEST RESULTS

  Port      Maintenance Name  Alt. Name Test No. Result       Error Code
  01C07     ANL-BD                      51       PASS
  01C07     ANL-BD                      52       PASS
  01C0703   ANL-LINE                    35       PASS
  01C0702   ANL-LINE                    35       PASS
  01C0703   ANL-LINE                    48       PASS
  01C0701   ANL-LINE                    35       PASS
  01C0702   ANL-LINE                    48       PASS
  01C0703   ANL-LINE                    36       PASS
  01C0702   ANL-LINE                    36       PASS
  01C0701   ANL-LINE                    48       PASS
  01C0701   ANL-LINE                    36       PASS

Testing system, 11070 of 12300 (90%) MOs tested for repetition 1
```

Field descriptions

`Port` Port address (cabinet-carrier-slot-circuit)

`Maintenance Name` The name of maintenance object

`Alt. Name` Alternate way to identify maintenance objects.

If the Object is	The field contains
station	extension
trunk	*xxx/yyy* (where *xxx* = trunk group number and *yyy* = member number)
private CO line	*P/xxx* (where *xxx* = private CO line group number)

`Test No.` The test being executed

`Result` Test result: No Board, Extra Bd, Disabled, or Skipped

`Error Code` Numeric code explaining why the release failed or aborted. Refer to the detailed list of the codes by test number for each MO.

The following example shows the output for the ***test hardware-group system*** with the ***background*** option selected.

```
test hardware-group system

Command started in background mode
```

test inads-link

This command attempts to make a call over the inads port on the maintenance board to verify the INADS alarm notification process. In the default settings, the system test the link to the first OSS telephone number. If there is an alarm pending to be reported or the call is in progress or up, then the test aborts. If the alarm origination to the OSS telephone number to be tested is disabled, then the test generates an informative error and the test continues. The test waits 2 minutes before dialing the call to allow the remote maintenance technician to logoff, thus freeing the line. A *local* SAT user entering the **test inads-link** command does not need to log off for the system to place the call, but the two-minute delay still exists.

Once the call is answered by INADS, the system sends a message with a test alarm type. INADS acknowledges receipt of the message and creates a trouble ticket. The trouble ticket is closed immediately and has a “INADS LINK TEST” message entered in the description field. If an alarm is raised while the test call is up, the system does not send an alarm message over the existing link. The normal retry mechanism is followed, which means an attempt to make a call to INADS to report the error takes place 7 minutes later. An INADS trouble ticket is created only if the connection is successfully established and a message is sent to the system acknowledging that INADS received the system message.

The `Maintain Process Circuit Packs` field must be set to **yes** on the inads and technician permission forms. This will provide permissions to execute the **test inads-link** command. This field can be changed by executing a **change permission login** command.

No alarms are raised on the system and attendant alarm and acknowledgment lamp states are not changed as a result of the **test inads-link** command. The test does not run during periodic or scheduled maintenance.

Action/Object	Qualifier	Qualifier Description	Permissions	Defaults	Feature Interactions
test inads-link	***1***	First OSS telephone number	init inads craft nms	1st OSS number	none
	2	Second OSS telephone number			
		Examples: **test inads-link** **test inads-link 1** **test inads-link 2**			

Output

`Command successfully completed`	Test passed
`Command failed`	Link was up, there was an active alarm that the switch needs to report, or there was a problem with the call.

NOTE:
An entry is made in the error log describing why the inads-link test failed.

test interface

This command performs hardware diagnostic tests on the specified processor interface circuit pack. In addition to testing the PI board, the tests examine the protocol and link interface that is transmitted over the board.

Action/Object	Qualifier	Qualifier Description	Permissions	Defaults	Feature Interactions
test interface	***location***	Location (cabinet-carrier-position) of the processor interface (position 1 = first processor interface in the carrier, 2 = second)	init inads craft nms	Test sequence = short; repeat = 1	none
	short	Option for a brief series of nondestructive diagnostic tests.			
	long	Option for a longer, more comprehensive series of both destructive and nondestructive diagnostic tests.			
	repeat number	Number of times each test in the sequence is repeated (1-100)			
	clear	This option causes the test sequence (short or long) to repeat until the alarm (if any) is cleared or a single test in the sequence fails.[1]			
	schedule	Command is validated and then a scheduling form displays to schedule execution of the command. The command is then placed in the command queue and is executed at the specified time. The information displayed by the command is sent to the system printer instead of the screen.[2] Examples: **test interface 01a1 l** **test interface 01b2 s r 2** **test interface 01b2 s r 2 schedule** **test interface b1 l r 25** **test interface a2**			

1. If no alarms are registered against the maintenance object then the test sequence is run only once. The ***long clear*** option forces a clear of all alarms if no errors are encountered during testing. The ***short clear*** option only clears alarms pertinent to tests in the short sequence. SEE WARNING BELOW.
2. Refer to the Report Scheduler and System Printer feature specification for more details.

WARNING:
Since the "clear long" options clear all counters if tests pass, it is possible for firmware counters to be cleared even when a problem exists. In some cases customer service might degrade since calls may be routed over defective equipment.

Output

The following example shows the output for the **test interface a1** command. The responses display on a test-by-test basis with one line of data for each test result.

```
test interface a1


                              TEST RESULTS

  Port    Maintenance Name  Alt. Name Test No. Result      Error Code
  01A1    PI-SCI                      231      PASS
  01A1    PI-BD                       52       PASS


Command Successfully Completed
```

Field descriptions

`Port`	Port address: cabinet-carrier-slot (the carrier associated with the particular processor interface board)
`Maintenance Name`	The name of maintenance object
`Alt. Name`	Not applicable.
`Test No`	The test being executed
`Result`	Test result: Pass, Abort, Fail, No Board, Disabled, or Extra Bd.
`Error Code`	Numeric code explaining why the release failed or aborted. Refer to the detailed list of the codes by test number for each MO.

test isdn-testcall

This command starts an outgoing, asynchronous ISDN-PRI test call in the asynchronous method from a specified trunk. If the test results are PASS, the test call is started. A test result of ABORT means that a resource wasn't available, for example, B-channel or a Maintenance/Test circuit pack. A test result of FAIL denotes that the outgoing ISDN-PRI test call was not established.

Action/Object	Qualifier	Qualifier Description	Permissions	Defaults	Feature Interactions
test isdn-testcall	***group number***	The administered group number associated with each trunk group	init inads craft	duration = 8.4 or 9.6 sec	See below
	member number	The administered member number identifying a particular trunk within a trunk group.			
	minute number	Duration of the test call in minutes (1-120)			
	schedule	Command is validated and then a scheduling form displays to schedule execution of the command. The command is then placed in the command queue and is executed at the specified time. The information displayed by the command is sent to the system printer instead of the screen.[1] Examples: **test isdn-testcall 80/1** **test isdn-testcall 80/1 schedule** **test isdn-testcall 78/2 minutes 10** **test isdn-testcall 78/3 minutes 100 schedule**			

1. Refer to the Report Scheduler and System Printer feature specification for more details.

Feature Interactions

- Use the **status isdn-testcall** command for details on how to access the additional data available after running the test.
- Only one ISDN trunk can be tested per port network at a time. Once testing is completed, another ISDN trunk can be tested in that port network.
- The maximum number of asynchronous outgoing test calls running depends upon the number of Maintenance/Test circuit packs in the system.

Output

The following example shows the output for the test **isdn-testcall 80/1** command. The responses display on a test-by-test basis with one line of data for each test result.

```
test isdn-testcall 77/1                                SPE A


                         TEST RESULTS

  Port      Maintenance Name  Alt. Name Test No. Result       Error Code
  01B1501   ISDN-TRK          077/001   258      PASS


Command Successfully Completed
```

Field descriptions

`Port`	Port address: cabinet-carrier-slot-circuit
`Maintenance Name`	The name of the maintenance object being tested.
`Alt. Name`	Alternate means of identifying the maintenance object: trunk object `xxx/yyy`, where `xxx` = trunk group number, `yyy` = member number
`Test No`	The test being executed
`Result`	Test result: Pass, Abort, Fail, No Board, Disabled, or Extra Bd.
`Error Code`	Numeric code explaining why the release failed or aborted. Refer to the detailed list of the codes by test number for each MO.

test journal-printer

This command performs hardware diagnostics on the link between the switch and one of the specified journal printer links. There are two types of journal printer links: pms-log and wakeup-log. For general information on journal printer links, see the description of the "busyout pms-link" command. For information on what a journal printer is and does, see the description of the "status journal-link" command.

Action/Object	Qualifier	Qualifier Description	Permissions	Defaults	Feature Interactions
test journal-printer	***pms-log***	Tests the link to the pms logging printer (maintenance name = PMS-PRNT)	init inads craft	Test sequence = short; repeat = 1	See below
	wakeup-log	Tests the link to the wakeup logging printer (maintenance name = JNL-PRNT)			
	short	Option for a brief series of nondestructive diagnostic tests.			
	long	Option for a longer, more comprehensive series of both destructive and nondestructive diagnostic tests.			
	repeat number	Number of times each test in the sequence is repeated (1-100)			
	clear	This option causes the test sequence (short or long) to repeat until the alarm (if any) is cleared or a single test in the sequence fails.[1]			
	schedule	Command is validated and then a scheduling form displays to schedule execution of the command. The command is then placed in the command queue and is executed at the specified time. The information displayed by the command is sent to the system printer instead of the screen.[2] Examples: **test journal-printer pms-log l** **test journal-printer pms-log l schedule** **test journal-printer wakeup-log r 2** **test journal-printer wakeup-log r 2 schedule** **test journ pm r 3** **test journ pm r 3 schedule**			

1. If no alarms are registered against the maintenance object then the test sequence is run only once. The ***long clear*** option forces a clear of all alarms if no errors are encountered during testing. The ***short clear*** option only clears alarms pertinent to tests in the short sequence.
2. Refer to the Report Scheduler and System Printer feature specification for more details.

Feature Interactions

The maintenance of a particular component on a link sometimes interferes with the maintenance of the link itself. Maintenance can put a link component in a busy state causing link set-up to fail. Frequent attempts at re-setup of a link may delay the recovery of a faulty component due to the maintenance test of a component only taking place when the component is idle. Therefore, the

technician needs to be able to disable the attempted re-setup of a link. Use of the busyout command causes the link to be torn down. If the link is already down, the busyout command will stop periodic re-setup trys on the link.

Output

The following example shows the output for the **test journal-printer pms-log** command. The responses display on a test-by-test basis with one line of data for each test result.

```
test journal-printer pms-log short


                              TEST RESULTS

  Port    Maintenance Name  Alt. Name Test No. Result       Error Code
          JRNL-LINK                   215      PASS


Command Successfully Completed
```

Field descriptions

Port	Not applicable (always blank)
Maintenance Name	The name of maintenance object being tested: PMS-PRINT for testing the pms-log printer link JNL-PRNT for testing the wakeup-log printer link
Alt. Name	Not applicable (always blank)
Test No	The test being executed
Result	Test result: Pass, Abort, Fail, Disabled
Error Code	Numeric code explaining why the release failed or aborted. Refer to the detailed list of the codes by test number for each MO.

test led

This command performs a test on all the LEDs in a specified cabinet. Once the cabinet is validated and the range of circuit packs determined, the **test led** command turns on all LEDs on the circuit packs contained in each carrier until all affected carriers are lit. Once all the LEDs are on, there is a 2-second pause, and then all the LEDs are turned off in the same order. Once all of the repeat cycles are completed, all affected LEDs are restored to the current status.

The following LEDs are NOT lighted by the **test led** command:

- Power Unit LEDs
- Yellow (amber) LED on the tape drive

Action/Object	Qualifier	Qualifier Description	Permissions	Defaults	Feature Interactions
test led	***all***	All LEDs in all carriers are tested	init inads craft	all; repeat = 1; test sequence = short in a duplex system	none
	cabinet number	Cabinet number (each carrier tested sequentially)			
	short	Simplex: short and long option are identical and turn on and off all leds in the specified port network.			
	long	Short and long option are identical and turn on and off all leds in the specified port network.			
	repeat number	Number of times each test in the sequence is repeated (1-100)			
		Examples: **test led** **test led all r 2** **test led cabinet 1** **test led c 1** **test led 1 long**			

test memory

This command performs hardware diagnostic tests on any or all memory circuit packs in the specified carrier. Both short and the long test are nondestructive when testing memory.

Action/Object	Qualifier	Qualifier Description	Permissions	Defaults	Feature Interactions
test memory	***location***	Physical location of the memory circuit pack: PC (cabinet number (optional) and carrier letter (**a**).	init inads craft nms	See below	none
	short	Option for a brief series of nondestructive diagnostic tests.			
	long	Option for a longer, more comprehensive test series (all nondestructive for this command).			
	repeat number	Number of times each test in the sequence is repeated (1-100)			
	clear	This option causes the test sequence (short or long) to repeat until the alarm (if any) is cleared or a single test in the sequence fails.[1]			
	schedule	Command is validated and then a scheduling form displays to schedule execution of the command. The command is then placed in the command queue and is executed at the specified time. The information displayed by the command is sent to the system printer instead of the screen.[2]			
		Examples: **test memory** **test memory a** **test memory a schedule** **test memory 1a2** **test memory b1 sh** **test memory b l r 25** **test memory a l c**			

1. If no alarms are registered against the maintenance object then the test sequence is run only once. The ***long clear*** option forces a clear of all alarms if no errors are encountered during testing. The ***short clear*** option only clears alarms pertinent to tests in the short sequence.
2. Refer to the Report Scheduler and System Printer feature specification for more details.

Defaults

The cabinet default is always 1. For SPE simplex systems, the default carrier is the “a” carrier. The defaults for the remaining parameters are short with a repeat of 1.

Output

The following example shows the output for the **test memory 1b** command. The responses display on a test-by-test basis with one line of data for each test result.

```
test memory 1b


                          TEST RESULTS

  Port     Maintenance Name  Alt. Name Test No. Result       Error Code
  01B      MEM-BD                      87       PASS
  01B      MEM-BD                      631      PASS


Command Successfully Completed
```

Field descriptions

`Port`	The port address (cabinet-carrier)
`Maintenance Name`	The name of maintenance object being tested is MEMORY.
`Alt. Name`	Not applicable.
`Test No.`	The test being executed
`Result`	The result of the test: Pass, Abort, or Fail
`Error Code`	Numeric code explaining why the release failed or aborted. Refer to the detailed list of the codes by test number for each MO.

test network-control

This command performs hardware diagnostic tests on a specified network control circuit pack.

Action/Object	Qualifier	Qualifier Description	Permissions	Defaults	Feature Interactions
test network-control	***location***	Network control board carrier location (a)	init inads craft	Cabinet 1, carrier a, test sequence repeat = 1.	none
	short	Option for a brief series of nondestructive diagnostic tests.			
	long	Option for a longer, more comprehensive series of both destructive and nondestructive diagnostic tests.			
	repeat number	Number of times each test in the sequence is repeated (1-100)			
	clear	This option causes the test sequence (short or long) to repeat until the alarm (if any) is cleared or a single test in the sequence fails.[1]			
	schedule	Command is validated and then a scheduling form displays to schedule execution of the command. The command is then placed in the command queue and is executed at the specified time. The information displayed by the command is sent to the system printer instead of the screen.[2] Examples: **test network-control** **test network-control a l** **test network-control b sh r 2** **test network-control b l r 25** **test network-control a** **test network-control a c**			

1. If no alarms are registered against the maintenance object then the test sequence is run only once. The ***long clear*** option forces a clear of all alarms if no errors are encountered during testing. The ***short clear*** option only clears alarms pertinent to tests in the short sequence. SEE WARNING BELOW
2. Refer to the Report Scheduler and System Printer feature specification for more details.

WARNING:
Since the "clear long" options clear all counters if tests pass, it is possible for firmware counters to be cleared even when a problem exists. In some cases customer service might degrade since calls may be routed over defective equipment.

Output

The following example shows the output from the **test network-control a** command. The responses display on a test-by-test basis with one line of data for each test result.

```
test network-control a


                              TEST RESULTS

  Port      Maintenance Name  Alt. Name Test No. Result      Error Code
  01A       DATA-BD                     52       PASS
  01A0101   DATA-CHL          4001      109      PASS
  01A0101   DATA-CHL          4001      110      PASS
  01A0101   DATA-CHL          4001      111      PASS
  01A       SW-CTL                      95       PASS
  01A       SW-CTL                      92       PASS
  01A       SW-CTL                      94       PASS
  01A       SW-CTL                      324      PASS
  01A       12V-PWR                     701      PASS
  01A       CARD-MEM                    695      PASS
  01A       CARD-MEM                    696      PASS
  01A       CARD-MEM                    697      PASS
  01A       CARD-MEM                    698      PASS
  01A       CARD-MEM                    699      PASS


Command Successfully Completed
```

Field descriptions

`Port`	Port address: cabinet (always 1)-carrier-slot-circuit. For the DATA-BD, SW-CTL, 12V-PWR, and CARD-MEM maintenance objects, the `slot` and `circuit` fields of port address are blank. DATA-CHL (administered data channel) uses XX as the slot address and has a circuit number between 01 and 04. The carrier field has a value A for the control carrier A in a simplex system.
`Maintenance Name`	The name of the maintenance object
`Alt. Name`	Extension number of the DATA-CHL, if administered. For other maintenance objects, this field is not applicable and, therefore, empty.
`Test No`	The test being executed
`Result`	Test result: Pass, Abort, Fail, No Board, Disabled, Extra Bd.
`Error Code`	Numeric code explaining why the release failed or aborted. Refer to the detailed list of the codes by test number for each MO.

test pkt

The test pkt runs a series of tests on the Packet bus of the specified PPN.

Action/Object	Qualifier	Qualifier Description	Permissions	Defaults	Feature Interactions
test pkt port-network	***pn number***	The Packet bus to be tested: *nn* (1)	init inads craft	Test Sequence = short; Repeat = 1	none
	short	Option for a brief series of nondestructive diagnostic tests.			
	long	Option for a longer, more comprehensive series of both destructive and nondestructive diagnostic tests.			
	repeat number	How many times each test in the sequence is repeated (1-100)			
	clear	This option causes the test sequence (short or long) to repeat until the alarm (if any) is cleared or a single test in the sequence fails.[1]			
	schedule	Command is validated and then a scheduling form displays to schedule execution of the command. The command is then placed in the command queue and is executed at the specified time. The information displayed by the command is sent to the system printer instead of the screen.[2] Examples: **test pkt port-network 1 l** **test pkt port-network 1 sh r 2** **test pkt port-network 1 sh schedule** **test pkt port-network 1 l r 25** **test pkt port-network 1** **test pkt port-network 1 c**			

1. If no alarms are registered against the maintenance object then the test sequence is run only once. The ***long clear*** option forces a clear of all alarms if no errors are encountered during testing. The ***short clear*** option only clears alarms pertinent to tests in the short sequence. SEE WARNING BELOW.
2. Refer to the Report Scheduler and System Printer feature specification for more details.

WARNING:
Since the "clear long" options clear all counters if tests pass, it is possible for firmware counters to be cleared even when a problem exists. In some cases customer service might degrade since calls may be routed over defective equipment.

Output

The following example is the output for the **test pkt port-network 1** command. The responses display on a test-by-test basis with one line of data for each test result.

```
test pkt port-network 1


                  TEST RESULTS

  Port    Maintenance Name  Alt. Name Test No. Result       Error Code
  PN 01   PKT-BUS                     571      PASS
  PN 01   PKT-BUS                     572      PASS
  PN 01   PKT-BUS                     573      PASS


Command successfully completed
```

Field descriptions

Port	Port network number (1)
Maintenance Name	The name of maintenance object being tested.
Alt. Name	Not applicable.
Test No	The test being executed
Result	Test result: Pass, Abort, Fail, No Board, Disabled, Extra Bd.
Error Code	Numeric code explaining why the release failed or aborted. Refer to the detailed list of the codes by test number for each MO.

test packet-interface

This command performs hardware diagnostic tests on the packet interface circuit packs in a specified carrier. Tests performed include local memory checksum tests and checks of failure counters.

Action/Object	Qualifier	Qualifier Description	Permissions	Defaults	Feature Interactions
test pkt-interface	***location***	The packet interface to be tested: *nn* (cabinet 1-3 + carrier letter)	init inads craft	test sequence = short; repeat number = 1	see below
	short	Option for a brief series of nondestructive diagnostic tests.			
	long	Option for a longer, more comprehensive series of both destructive and nondestructive diagnostic tests.			
	repeat number	How many times each test in the sequence is repeated (1-100)			
	clear	This option causes the test sequence (short or long) to repeat until the alarm (if any) is cleared or a single test in the sequence fails.[1]			
	schedule	Command is validated and then a scheduling form displays to schedule execution of the command. The command is then placed in the command queue and is executed at the specified time. The information displayed by the command is sent to the system printer instead of the screen.[2] Examples: **test packet-interface 01a**			

1. If no alarms are registered against the maintenance object then the test sequence is run only once. The ***long clear*** option forces a clear of all alarms if no errors are encountered during testing. The ***short clear*** option only clears alarms pertinent to tests in the short sequence.
2. Refer to the Report Scheduler and System Printer feature specification for more details.

Feature Interactions

If the packet-interface circuit pack is in the “out-of-service” or “uninstalled” states, no demand, scheduled, periodic, or error tests can run. See also ‘‘reset packet-interface’’ and ‘‘status packet-interface’’.

Output

The following example is the output for the **test packet-interface 1a1** command. The responses display on a test-by-test basis with one line of data for each test result.

```
test packet-interface 1a1


                              TEST RESULTS

  Port    Maintenance Name  Alt. Name Test No. Result       Error Code

  01A     PKT_INT                     887      PASS
  01A     PKT_INT                     888      PASS

Command Successfully Completed
```

test pms-link

This command performs the specified property management system link tests on the specified pms link by checking to see if the link is accessible and then performing a reset on the link (long test only). For general information on PMS links, see the description in the "busyout pms-link" section. For information on what a PMS is and does, see the description in the "status pms-link" section.

Action/Object	Qualifier	Qualifier Description	Permissions	Defaults	Feature Interactions
test pms-link	***short***	Option for a brief series of nondestructive diagnostic tests.	init inads craft	Test Sequence = short; Repeat = 1	See below
	long	Option for a longer, more comprehensive series of both destructive and nondestructive diagnostic tests.			
	repeat number	How many times each test in the sequence is repeated (1-100)			
	clear	This option causes the test sequence (short or long) to repeat until the alarm (if any) is cleared or a single test in the sequence fails.[1]			
	schedule	Command is validated and then a scheduling form displays to schedule execution of the command. The command is then placed in the command queue and is executed at the specified time. The information displayed by the command is sent to the system printer instead of the screen.[2] Examples: **test pms-link sh r 5** **test pms-link l** **test pms-link** **test pms-link c** **test pms-link c sch**			

1. If no alarms are registered against the maintenance object then the test sequence is run only once. The ***long clear*** option forces a clear of all alarms if no errors are encountered during testing. The ***short clear*** option only clears alarms pertinent to tests in the short sequence.
2. Refer to the Report Scheduler and System Printer feature specification for more details.

Feature Interactions

The maintenance of a particular component on a link may interfere with the maintenance of the link itself. Maintenance can put a link component in a busy state causing link set-up to fail. Frequent attempts at re-setup of a link may delay the recovery of a faulty component due to the maintenance test of a component only taking place when the component is idle. Therefore, the technician needs to be able to disable the attempted re-setup of a link. The **busyout** command is used to do this and causes the link to be torn down. If the link is already down, the **busyout** command stops periodic re-setup tries on the link.

Output

The following example shows the output from the **test pms-link l** command. The responses display on a test-by-test basis with one line of data for each test result.

```
test pms-link long


                              TEST RESULTS

  Port    Maintenance Name  Alt. Name Test No. Result       Error Code
          PMS-LINK                    214      PASS


Command Successfully Completed
```

Field descriptions

`Port`	Always blank
`Maintenance Name`	Always PMS-LINK
`Alt. Name`	Not applicable.
`Test No`	The test being executed
`Result`	Test result: Pass, Abort, Fail, No Board, Disabled, Extra Bd.
`Error Code`	Numeric code explaining why the release failed or aborted. Refer to the detailed list of the codes by test number for each MO.

test port

This command performs hardware diagnostic tests on an individual port circuit. In most cases, tests are performed on hardware connected to the port.

Action/ Object	Qualifier	Qualifier Description	Permissions	Defaults	Feature Interactions
test port	***location***	**PCSSpp**	init inads craft	Test Sequence = short; Repeat = 1	none
	short	Option for a brief series of nondestructive diagnostic tests.			
	long	Option for a longer, more comprehensive series of both destructive and nondestructive diagnostic tests.			
	repeat number	How many times each test in the sequence is repeated (1-100)			
	clear	This option causes the test sequence (short or long) to repeat until the alarm (if any) is cleared or a single test in the sequence fails.[1]			
	schedule	Command is validated and then a scheduling form displays to schedule execution of the command. The command is then placed in the command queue and is executed at the specified time. The information displayed by the command is sent to the system printer instead of the screen.[2] Examples: **test port 01c1101 l** **test port 01c1101 l schedule** **test port 02e1502 sh r 2** **test port 02d1201 r 4** **test port 01c1101 c**			

1. If no alarms are registered against the maintenance object then the test sequence is run only once. The ***long clear*** option forces a clear of all alarms if no errors are encountered during testing. The ***short clear*** option only clears alarms pertinent to tests in the short sequence. SEE WARNING BELOW.
2. Refer to the Report Scheduler and System Printer feature specification for more details.

WARNING:
Since the "clear long" options clear all counters if tests pass, it is possible for firmware counters to be cleared even when a problem exists. In some cases customer service might degrade since calls may be routed over defective equipment.

Output

The following example is the output for the **test port** command and assumes that the port in cabinet 1, carrier c, slot 7, circuit 1 is an analog port. The responses display on a test-by-test basis with one line of data for each test result.

```
test port 01c0701 short


                  TEST RESULTS

  Port      Maintenance Name  Alt. Name Test No. Result       Error Code
  01C0701   ANL-LINE                    35       PASS
  01C0701   ANL-LINE                    48       PASS
  01C0701   ANL-LINE                    36       PASS


Command Successfully Completed
```

Field descriptions

`Port` Port address (cabinet-carrier-slot-circuit)

`Maintenance Name` The name of maintenance object.

`Alt. Name` The alternate means of identifying the maintenance object.

If the Object is a	The field contains
station	extension
trunk	xxx/yyy (xxx = trunk group number and yyy = member number)
private CO line	P/xxx (xxx = private CO line group number)

`Test No` Test being executed.

`Result` Test result: Pass, Abort, Fail, No Board, Disabled, Extra Bd.

`Error Code` Numeric code explaining why the release failed or aborted. Refer to the detailed list of the codes by test number for each MO.

test pri-endpoint

This command performs hardware diagnostic tests on all port circuits (B-channels) that are associated with the specified PRI endpoint.

Action/Object	Qualifier	Qualifier Description	Permissions	Defaults	Feature Interactions
test pri-endpoint	***extension***	PRI endpoint extension to be tested (must conform to dial-plan)	init inads craft nms	Test Sequence = short; Repeat = 1	none
	short	Option for a brief series of nondestructive diagnostic tests.			
	long	Option for a longer, more comprehensive series of both destructive and nondestructive diagnostic tests.			
	repeat number	How many times each test in the sequence is repeated (1-100)			
	clear	This option causes the test sequence (short or long) to repeat until the alarm (if any) is cleared or a single test in the sequence fails.[1]			
	schedule	Command is validated and then a scheduling form displays to schedule execution of the command. The command is then placed in the command queue and is executed at the specified time. The information displayed by the command is sent to the system printer instead of the screen.[2] Examples: **test pri-endpoint 25012** **test pri-endpoint 45002 sh** **test pri-endpoint 45892 l** **test pri-endpoint 24389 sh r 4** **test pri-endpoint 34899 l r 6** **test pri-endpoint 34912 l r 5 schedule** **test pri-endpoint 93483 r 2** **test pri-endpoint 10022 c** **test pri-endpoint 92349 schedule**			

1. If no alarms are registered against the maintenance object then the test sequence is run only once. The ***long clear*** option forces a clear of all alarms if no errors are encountered during testing. The ***short clear*** option only clears alarms pertinent to tests in the short sequence.
2. Refer to the Report Scheduler and System Printer feature specification for more details.

Output

The following output example is for the **test pri-endpoint 22501** command and assumes that the PRI endpoint ports for extension 22501 are in cabinet 1, carrier B, slot 20, circuits 1 to 3. The responses display on a port-by-port and test-by-test basis with one line of data for each test result.

```
test pri-endpoint 22501 short                    page 1 of 1


                            TEST RESULTS

  Port      Maintenance Name  Alt. Name Test No. Result      Error Code
  01B2001   PE-BCHL           22501     36       PASS
  01B2001   PE-BCHL           22501     255      PASS
  01B2001   PE-BCHL           22501     256      PASS
  01B2001   PE-BCHL           22501     257      PASS
  01B2002   PE-BCHL           22501     36       PASS
  01B2002   PE-BCHL           22501     255      PASS
  01B2002   PE-BCHL           22501     256      PASS
  01B2002   PE-BCHL           22501     257      PASS
  01B2003   PE-BCHL           22501     36       PASS
  01B2003   PE-BCHL           22501     255      PASS
  01B2003   PE-BCHL           22501     256      PASS
  01B2003   PE-BCHL           22501     257      PASS


Command Successfully Completed
```

Field descriptions

`Port`	The port address (cabinet-carrier-slot-circuit)
`Maintenance Name`	The maintenance object name (PE-BCHL)
`Alt. Name`	The specified extension number of the PRI endpoint.
`Test No`	The actual test being executed
`Result`	Test result: Pass, Abort, Fail, No Board, Disabled, Extra Bd.
`Error Code`	Numeric code explaining why the release failed or aborted. Refer to the detailed list of the codes by test number for each MO.

test processor

This command performs hardware diagnostic tests on a specified processor circuit pack.

Action/Object	Qualifier	Qualifier Description	Permissions	Defaults	Feature Interactions
test processor	***location***	Cabinet number (**a**)	init inads craft	See below	none
	short	Option for a brief series of nondestructive diagnostic tests.			
	long	Option for a longer, more comprehensive series of both destructive and nondestructive diagnostic tests.			
	clear	This option causes the test sequence (short or long) to repeat until the alarm (if any) is cleared or a single test in the sequence fails.[1]			
	schedule	Command is validated and then a scheduling form displays to schedule execution of the command. The command is then placed in the command queue and is executed at the specified time. The information displayed by the command is sent to the system printer instead of the screen.[2] Examples: **test processor** **test processor schedule** **test processor a** **test processor 1a** **test processor a sh** **test processor a l c**			

1. If no alarms are registered against the maintenance object then the test sequence is run only once. The ***long clear*** option forces a clear of all alarms if no errors are encountered during testing. The ***short clear*** option only clears alarms pertinent to tests in the short sequence.
2. Refer to the Report Scheduler and System Printer feature specification for more details.

Defaults

- For SPE simplex systems, the location is optional and defaults to cabinet 1, carrier a.
- Defaults for the remaining parameters are short with a repeat of 1.

Output

The following output example is for the **test processor a** command. The responses display on a test-by-test basis with one line of data for each test result.

```
test processor a                                SPE B


                          TEST RESULTS

  Port    Maintenance Name  Alt. Name Test No. Result      Error Code
  01A     PROCR                        77      PASS
  01A     PROCR                        80      PASS
  01A     PROCR                        82      PASS
  01A     PR-MAINT                    102      ABORT       1018
  01A     PR-MAINT                    103      ABORT       1018
  01A     PR-MAINT                    106      PASS
  01A     PR-MAINT                    228      PASS
  01A     PR-MAINT                    229      ABORT       1018
  01A     MEMORY                       87      PASS
  01A     MEMORY                      631      PASS


Command successfully completed
```

Field descriptions

Port	The port address (cabinet-carrier)
Maintenance Name	Maintenance object being tested is MEMORY.
Alt. Name	Not applicable.
Test No.	Test being executed
Result	Test result: Pass, Abort, Fail, No Board, Disabled, Extra Bd.
Error Code	Numeric code explaining why the release failed or aborted. Refer to the detailed list of the codes by test number for each MO.

test signaling-group

This command validates that the specified signaling group is administered and runs a series of diagnostic tests that return results of the test along with possible error codes. A signaling group is a collection of B-channels signaled for by a designated single D-channel or set of D-channels over an ISDN-PRI.

Action/Object	Qualifier	Qualifier Description	Permissions	Defaults	Feature Interactions
test signaling-group	***group identifier***	The station extension (must conform to dial-plan)	init inads craft	Test Sequence = short; Repeat = 1	See below
	short	Option for a brief series of nondestructive diagnostic tests.			
	long	Option for a longer, more comprehensive series of both destructive and nondestructive diagnostic tests.			
	repeat number	How many times each test in the sequence is repeated (1-100)			
	clear	This option causes the test sequence (short or long) to repeat until the alarm (if any) is cleared or a single test in the sequence fails.[1]			
	schedule	Command is validated and then a scheduling form displays to schedule execution of the command. The command is then placed in the command queue and is executed at the specified time. The information displayed by the command is sent to the system printer instead of the screen.[2] Examples: **test signaling-group 1** **test signaling-group 1 repeat 10** **test signaling-group 2 short** **test signaling-group 4 long** **test signaling-group 4 long clear** **test signaling-group 2 schedule**			

1. If no alarms are registered against the maintenance object then the test sequence is run only once. The ***long clear*** option forces a clear of all alarms if no errors are encountered during testing. The ***short clear*** option only clears alarms pertinent to tests in the short sequence. SEE WARNING BELOW.
2. Refer to the Report Scheduler and System Printer feature specification for more details.

WARNING:
Since the "clear long" options clear all counters if tests pass, it is possible for firmware counters to be cleared even when a problem exists. In some cases customer service might degrade since calls may be routed over defective equipment.

Feature Interactions

Additional data is available after running a test. See the **status signaling-group** command for how to access the additional data.

Output

The following output example is for the **test signaling-group 1** command. The responses display on a test-by-test basis with one line of data for each test result.

```
test signaling-group 1                          SPE A


                            TEST RESULTS

  Port    Maintenance Name  Alt. Name Test No. Result       Error Code
  1       ISDN-SGR                    636      PASS
  1       ISDN-SGR                    639      PASS
  1       ISDN-SGR                    637      PASS


Command Successfully Completed
```

Field descriptions

`Port`	The signaling group number (1-8) of the signaling group that is being tested.
`Maintenance Name`	The type of maintenance object that is being tested.
`Alt. Name`	Not Applicable.
`Test No`	Test being executed
`Result`	Test result: Pass, Abort, Fail, No Board, Disabled, Extra Bd.
`Error Code`	Numeric code explaining why the release failed or aborted. Refer to the detailed list of the codes by test number for each MO.

test sp-link

The test sp-link command validates that the system printer link is administered and runs a series of diagnostic tests that return results of the test along with possible error codes.

The system printer link is a link from the switch to an external printer over which jobs can be printed. This link is created by administering the system printer extension and setting up a call to the system printer.

Action/Object	Qualifier	Qualifier Description	Permissions	Defaults	Feature Interactions
test sp-link	***short***	Option for a brief series of nondestructive diagnostic tests.	init inads craft	short	none
	long	Option for a longer, more comprehensive series of both destructive and nondestructive diagnostic tests.			
	schedule	Command is validated and then a scheduling form displays to schedule execution of the command. The command is then placed in the command queue and is executed at the specified time. The information displayed by the command is sent to the system printer instead of the screen.[1] Examples: **test sp-link** **test sp-link sh** **test sp-link l** **test sp-link schedule** **test sp-link sh sch**			

1. Refer to the Report Scheduler and System Printer feature specification for more details.

Output

The following output example is for the **test sp-link** command. The responses display on a test-by-test basis with one line of data for each test result.

```
test sp-link                                  SPE A


                              TEST RESULTS

  Port    Maintenance Name  Alt. Name Test No. Result       Error Code
          SYS-PRNT                    215      PASS
          SYS-PRNT                    213      PASS


Command Successfully Completed
```

Field descriptions

`Port`	Not applicable; always blank
`Maintenance Name`	The name of the maintenance object
`Alt. Name`	Alternate means of identifying the maintenance object. This field contains the extension when the object is a data module.
`Test No`	Test being executed
`Result`	Test result: Pass, Abort, Fail, No Board, Disabled, Extra Bd.
`Error Code`	Numeric code explaining why the release failed or aborted. Refer to the detailed list of the codes by test number for each MO.

test station

This command performs hardware diagnostic tests on an individual port circuit assigned to that extension. The technician must specify the extension and a translation is automatically done to the physical port location.

Action/ Object	Qualifier	Qualifier Description	Permissions	Defaults	Feature Interactions
test station	***extension***	The station extension (must conform to dial-plan)	init inads craft cust nms	Test Sequence = short; Repeat = 1	none
	short	Option for a brief series of nondestructive diagnostic tests.			
	long	Option for a longer, more comprehensive series of both destructive and nondestructive diagnostic tests.			
	repeat number	How many times each test in the sequence is repeated (1-100)			
	clear	This option causes the test sequence (short or long) to repeat until the alarm (if any) is cleared or a single test in the sequence fails.[1]			
	schedule	Command is validated and then a scheduling form displays to schedule execution of the command. The command is then placed in the command queue and is executed at the specified time. The information displayed by the command is sent to the system printer instead of the screen.[2] Examples: **test station 81709 l** **test station 85136 s r 2** **test station 85036 l r 25** **test station 85036 l r 25 schedule** **test station 84297 r 4** **test station 81709 c**			

1. If no alarms are registered against the maintenance object then the test sequence is run only once. The ***long clear*** option forces a clear of all alarms if no errors are encountered during testing. The ***short clear*** option only clears alarms pertinent to tests in the short sequence. SEE WARNING BELOW.
2. Refer to the Report Scheduler and System Printer feature specification for more details.

WARNING:
Since the "clear long" options clear all counters if tests pass, it is possible for firmware counters to be cleared even when a problem exists. In some cases customer service might degrade since calls may be routed over defective equipment.

Output

The following screen is an example of the output from the **test station 81902 short** command with the assumptions that port in cabinet 1, carrier c, slot 7, circuit 1 is an analog port and extension 81902 is connected to that port. The responses display on a test-by-test basis with one line of data for each test result.

```
test station 81902 short


                            TEST RESULTS

  Port      Maintenance Name  Alt. Name Test No. Result       Error Code
  01C0701   ANL-LINE                    35       PASS
  01C0701   ANL-LINE                    48       PASS
  01C0701   ANL-LINE                    36       PASS


Command Successfully Completed
```

Field descriptions

`Port`	The port address: cabinet-carrier-slot-circuit
`Maintenance Name`	The type of maintenance object that is being tested.
`Alt. Name`	Alternate means of identifying the maintenance object. This field contains the extension when the object is a station.
`Test No`	Test being executed
`Result`	Test result: Pass, Abort, Fail, No Board, Disabled, Extra Bd.
`Error Code`	Numeric code explaining why the release failed or aborted. Refer to the detailed list of the codes by test number for each MO.

test synchronization

This command updates all the boards with the correct synchronization source and parameters. The system sends a downlink message to the tone clock and DS1 boards to place them in the correct synchronization configuration, providing error-free digital communication between the switch and other PBXs, COs, or customer premise equipment.

Action/ Object	Qualifier	Qualifier Description	Permissions	Defaults	Feature Interactions
test synch	***short***	Option for a brief series of nondestructive diagnostic tests.	init inads craft	Test Sequence = short; Repeat = 1	none
	long	Option for a longer, more comprehensive series of both destructive and nondestructive diagnostic tests.			
	repeat number	How many times each test in the sequence is repeated (1-100)			
	clear	This option causes the test sequence (short or long) to repeat until the alarm (if any) is cleared or a single test in the sequence fails.[1]			
	schedule	Command is validated and then a scheduling form displays to schedule execution of the command. The command is then placed in the command queue and is executed at the specified time. The information displayed by the command is sent to the system printer instead of the screen.[2] Examples: **test synchronization r 3** **test synchronization sh r 1** **test synchronization sh r 1 schedule** **test synchronization l**			

1. If no alarms are registered against the maintenance object then the test sequence is run only once. The ***long clear*** option forces a clear of all alarms if no errors are encountered during testing. The ***short clear*** option only clears alarms pertinent to tests in the short sequence.
2. Refer to the Report Scheduler and System Printer feature specification for more details.

Output

The following screen is an example of the output for the **test synchronization short** command. The responses are displayed on a test-by-test basis with one line of data for each test result.

```
test synchronization short


                              TEST RESULTS

  Port    Maintenance Name  Alt. Name Test No. Result       Error Code
          SYNC                        417      PASS


Command Successfully Completed
```

Field descriptions

Port	Not applicable
Maintenance Name	Maintenance object name
Alt. Name	Not applicable
Test No.	Test being executed
Result	Test result: Pass, Abort, Fail, No Board, Disabled, Extra Bd.
Error Code	Numeric code explaining why the release failed or aborted. Refer to the detailed list of the codes by test number for each MO.

test sys-link

This command validates the specified link and runs diagnostic tests on the hardware objects that comprises the system link. If the ***current*** or ***faulted*** options are specified, tests are run on all hardware objects that comprise the specified link. If ***current*** or ***faulted*** is not specified, only the end-to-end sys-link connection is tested.

The hardware path that comprises a system link consists of up to 21 hardware components that affect the behavior of the link. The number of components of a given system link hardware path depends on the system configuration and type of system link.

Action/ Object	Qualifier	Qualifier Description	Permissions	Defaults	Feature Interactions
test sys-link	***location***	Port location associated with the system link.	init inads craft		none
	current	Current hardware path tested			
	faulted	Tests the hardware path of the system link as it was constituted when a fault last caused the link to go down.			
	short	Option for a brief series of nondestructive diagnostic tests.			
	long	Option for a longer, more comprehensive series of both destructive and nondestructive diagnostic tests.			
	repeat number	How many times each test in the sequence is repeated (1-100)			
	clear	This option causes the test sequence (short or long) to repeat until the alarm (if any) is cleared or a single test in the sequence fails.[1]			
	schedule	Command is validated and then a scheduling form displays to schedule execution of the command. The command is then placed in the command queue and is executed at the specified time. The information displayed by the command is sent to the system printer instead of the screen.[2] Examples: **test sys-link 2e0201 current schedule** **test sys-link 2e0201 faulted r 10**			

1. If no alarms are registered against the maintenance object then the test sequence is run only once. The ***long clear*** option forces a clear of all alarms if no errors are encountered during testing. The ***short clear*** option only clears alarms pertinent to tests in the short sequence.
2. Refer to the Report Scheduler and System Printer feature specification for more details.

Output

The following example shows the output from the **test sys-link 01A0516 current** command.

```
test sys-link 01A0516 current                          Page   1   SPE A

                                   TEST RESULTS

  Port      Maintenance Name  Alt. Name Test No. Result      Error Code

  01A0516   SYS-LINK          PRI       985      PASS
  01A       PKT-INT                     886      PASS
  01A       PKT-INT                     887      PASS
  PN 01A    TDM-BUS                     294      PASS
  PN 01A    TDM-BUS                     296      PASS

       press CANCEL to quit -- press NEXT PAGE to continue
```

Field descriptions

`Port`	Port address
`Maintenance Name`	Maintenance object name
`Alt. Name`	Alternate means of identifying the link
`Test No.`	Test being executed
`Result`	Test result: Pass, Abort, Fail, No Board, Disabled, Extra Bd.
`Error Code`	Numeric code explaining why the release failed or aborted. Refer to the detailed list of the codes by test number for each MO.

test tdm

This command tests all the time slots on a bus associated with a PPN or an EPN.

Action/ Object	Qualifier	Qualifier Description	Permissions	Defaults	Feature Interactions
test tdm	***pn number***	*nn* = number of the port network to have its TDM bus tested. Both halves (“a” and “b”) of the TDM bus are tested.	init inads craft	Test Sequence = short; Repeat = 1	none
	short	Option for a brief series of nondestructive diagnostic tests.			
	long	Option for a longer, more comprehensive series of both destructive and nondestructive diagnostic tests.			
	repeat number	How many times each test in the sequence is repeated (1-100)			
	clear	This option causes the test sequence (short or long) to repeat until the alarm (if any) is cleared or a single test in the sequence fails.[1]			
	schedule	Command is validated and then a scheduling form displays to schedule execution of the command. The command is then placed in the command queue and is executed at the specified time. The information displayed by the command is sent to the system printer instead of the screen.[2] Examples: **test tdm port-network 1 l** **test tdm port-network 2 sh r 2** **test tdm port-network 2 sh sch** **test tdm port-network 1 l r 25** **test tdm port-network 2** **test tdm port-network 1 c**			

1. If no alarms are registered against the maintenance object then the test sequence is run only once. The ***long clear*** option forces a clear of all alarms if no errors are encountered during testing. The ***short clear*** option only clears alarms pertinent to tests in the short sequence.
2. Refer to the Report Scheduler and System Printer feature specification for more details.

Output

The following example shows the output for the **test tdm port-network 1** command. The responses display on a test-by-test basis with one line of data for each test result.

```
test tdm port-network 1


                              TEST RESULTS

  Port    Maintenance Name  Alt. Name Test No. Result       Error Code
  PN 01A  TDM-BUS                     294      PASS
  PN 01A  TDM-BUS                     296      PASS
  PN 01A  TDM-BUS                     297      PASS
  PN 01B  TDM-BUS                     294      PASS
  PN 01B  TDM-BUS                     296      PASS
  PN 01B  TDM-BUS                     297      PASS


Command Successfully Completed
```

Field descriptions

`Port`	For TDM-BUS maintenance object the port network number and the bus (A or B) is displayed.
`Maintenance Name`	Maintenance object name
`Alt. Name`	Not applicable.
`Test No`	Test being executed
`Result`	Test result: Pass, Abort, Fail, No Board, Disabled, Extra Bd.
`Error Code`	Numeric code explaining why the release failed or aborted. Refer to the detailed list of the codes by test number for each MO.

test tone-clock

The test tone/clock command performs hardware diagnostic tests on a specified tone or clock circuit pack.

Action/Object	Qualifier	Qualifier Description	Permissions	Defaults	Feature Interactions
test tone-clock	***location***	PCSS	init inads craft	Test Sequence = short; Repeat = 1	none
	short	Option for a brief series of nondestructive diagnostic tests.			
	long	Option for a longer, more comprehensive series of both destructive and nondestructive diagnostic tests.			
	repeat number	How many times each test in the sequence is repeated (1-100)			
	clear	This option causes the test sequence (short or long) to repeat until the alarm (if any) is cleared or a single test in the sequence fails.[1]			
	schedule	Command is validated and then a scheduling form displays to schedule execution of the command. The command is then placed in the command queue and is executed at the specified time. The information displayed by the command is sent to the system printer instead of the screen.[2] Examples: **test tone-clock 01a l** **test tone-clock 01b l schedule**			

1. If no alarms are registered against the maintenance object then the test sequence is run only once. The ***long clear*** option forces a clear of all alarms if no errors are encountered during testing. The ***short clear*** option only clears alarms pertinent to tests in the short sequence.
2. Refer to the Report Scheduler and System Printer feature specification for more details.

Output

The following is the output for the **test tone-clock** 1a command. The responses display on a test-by-test basis with one line of data for each test result.

```
test tone-clock 1a


                          TEST RESULTS

  Port     Maintenance Name  Alt. Name Test No. Result       Error Code
  01A      TONE-BD                     46       PASS
  01A      TONE-BD                     52       PASS
  01A      TONE-PT                     40       PASS
  01A      TONE-PT                     41       PASS
  01A      TDM-CLK                     148      PASS
  01A      TDM-CLK                     149      PASS
  01A      TDM-CLK                     150      PASS
  01A      TDM-CLK                     151      PASS
  01A      TDM-CLK                     574      PASS


Command Successfully Completed
```

Field descriptions

Port	The port address: cabinet-carrier-slot-circuit
Maintenance Name	Maintenance object name: TONE-BD, TONE-PT, and TDM-CLK.
Alt. Name	Not applicable.
Test No	Test being executed
Result	Test result: Pass, Abort, Fail, No Board, Disabled, or Extra Bd.
Error Code	Numeric code explaining why the release failed or aborted. Refer to the detailed list of the codes by test number for each MO.

test trunk

This command performs hardware diagnostic tests on an entire trunk group or an individual trunk group member, depending on the options entered.

Action/ Object	Qualifier	Qualifier Description	Permissions	Defaults	Feature Interactions
test trunk	***group number***	Administered group number (1-99)	init inads craft cust	Test Seq. = short; Repeat = 1	none
	member number	Administered number identifying a particular trunk within a trunk group (1-99).			
	short	Command executes a series of nondestructive diagnostic tests.			
	long	Command executes a more comprehensive and longer version of the both destructive and nondestructive diagnostic tests.			
	repeat number	How many times each test in the sequence is repeated (1-100)			
	clear	This option causes the test sequence (short or long) to repeat until the alarm (if any) is cleared or a single test in the sequence fails.[1]			
	schedule	Command is validated and then a scheduling form displays to schedule execution of the command. The command is then placed in the command queue and is executed at the specified time. The information displayed by the command is sent to the system printer instead of the screen.[2] Examples: **test trunk 78 l** **test trunk 80/1 sh r 2** **test trunk 78/2 l r 25** **test trunk 78/2 l r 25 schedule** **test trunk 80** **test trunk 80 schedule** **test trunk 78 r 4** **test trunk 78 c**			

1. If no alarms are registered against the maintenance object then the test sequence will be exercised only once. The ***long clear*** option forces a clear of all alarms if no errors are encountered during testing. The ***short clear*** option only clears alarms pertinent to tests in the short sequence.
2. Refer to the Report Scheduler and System Printer feature specification for more details.

Output

The following screen is an example of the output for the **test trunk 78** command. The responses display on a test-by-test basis with one line of data for each test result.

```
test trunk 78


                              TEST RESULTS

  Port      Maintenance Name  Alt. Name Test No. Result       Error Code
  01C1505   CO-TRK            078/001   3        PASS
  01C1505   CO-TRK            078/001   36       PASS


Command Successfully Completed
```

Field descriptions

Port	The port address: cabinet-carrier-slot-circuit
Maintenance Name	The name of maintenance object being tested.
Alt. Name	The alternate means of identifying the maintenance object. If the object is a trunk, the field contains xxx/yyy (where *xxx* = trunk group number, *yyy* = member number). If the object is a private CO line, the field contains P/xxx (where *xxx* = private CO line group number).
Test No	The test number being executed
Result	The result of the individual test: PASS, ABORT, FAIL, NO BOARD, DISABLED, and EXTRA BD.
Error Code	A system-generated number indicating the reason that the test for the named MO failed or aborted.

test tsc-administered

This command submits a switched services request to run the Temporary Signaling Connection's heartbeat test for all administered TSCs on a signaling group.

Action/Object	Qualifier	Qualifier Description	Permissions	Defaults	Feature Interactions
test tsc-administered	***signaling group number/***	Signaling group number (1–8)	init inads craft	repeat = 1	Additional data available after running the test. See **status tsc-administered** for how to access additional data.
	tsc index	The number associated with each TSC in a signaling group.			
	repeat number	The number of times each test in sequence is repeated.			
	schedule	Command is validated and then a scheduling form displays to schedule execution of the command. The command is then placed in the command queue and is executed at the specified time. The information displayed by the command is sent to the system printer instead of the screen.[1]			

1. Refer to the Report Scheduler and System Printer feature specification for more details.

Output

The following is an example of the output from the **test tsc-administered 1/1** command. The responses display on a test-by-test basis with one line of data for each test result.

```
test tsc-administered 1/1


                              TEST RESULTS

  Port     Maintenance Name  Alt. Name Test No. Result       Error Code
  1/1      TSC-ADM                     604      PASS


Command Successfully Completed
```

Field descriptions

`Port`	Port address of the administered temporary signaling connection (format = *signaling group no./tsc index*)
`Maintenance Name`	The name of the maintenance object
`Alt. Name`	Not applicable
`Test No.`	The test number being executed

`Result`	Test result: Pass, Abort, Fail, No Board, Disabled, or Extra Bd.
`Error Code`	A system-generated number indicating the reason that the test for the named MO failed or aborted.

upgrade software

This command upgrades the software text image, the flash component of the LMM firmware, the MTP firmware, and the Processor Interface (PI) firmwares. In a simplex system, the command verifies that a software card-mem is present and then, if present, proceeds to reprogram the flash memory and perform a level-4 restart. During the restart of the system, the system technician is prompted to replace the software card-mem with the translation card-mem. Service is provided upon completion of the system restart. Service down time is 5-12 minutes.

WARNING:
Be sure to save translations before this executing this command. It may also be helpful to read the Feature Interactions for this command before upgrading the system software.

Action/Object	Qualifier	Qualifier Description	Permissions	Defaults	Feature Interactions
upgrade software	none		init inads craft	none	See below

Feature Interactions

System Restarts

An upgrade causes a system restart: simplex systems perform a Level-4 restart, and duplex systems perform a Level-2 SPE-interchange after the standby is upgraded through a Level-4 restart.

Initcauses

Executing **display initcauses** shows the software upgrade and the system reset level.

Multi-User Contention

When this command is executing, all other maintenance commands are blocked. Exceptions to these are most of the status or display commands. All administration commands are not blocked. It is the user's responsibility to make sure that no new translations are added between the last **save translation** operation and the completion of the **upgrade software** command.

Recent Change History Log

The **upgrade software** command will not be logged for both simplex and duplex systems. This is due to the clearing of memory during the level 4 reset.

Periodic and Scheduled Maintenance

Periodic and scheduled maintenance is suspended during the upgrade.

Error and Alarm Log

Error and alarm logs before the software upgrade are lost.

Demand Busyout Objects

Maintenance objects that have been demand busyout are released when the processor reboots or interchanges during the software upgrade. If the command is cancelled before the actual reboot or interchange starts, then all demand busyout objects status are preserved.

Data Consistency between SPEs

Data consistency alarms are generated if the software in the active and standby SPE are not consistent.

Disabled Objects

All disabled objects retain their "disabled" status after a software upgrade according to the status recorded in the last **save translation** command.

Output

The following is the output from the **upgrade software** command and a successful simplex upgrade.

```
INITIATING SOFTWARE UPGRADE
MEM-CARD CHECKSUM          PASSED
REPROGRAMMING MTP          PASSED
ERASING MEMORY             PASSED
REPROGRAMMING SPE          PASSED
FLASH TEXT CHECKSUM        PASSED
 UPGRADE COMPLETE
 <beep>
 REPLACE SOFTWARE MEM-CARD WITH TRANSLATION MEM-CARD
 <beep>
```

Explanations and error recoveries to the above steps follow:

INITIATING SOFTWARE UPGRADE:	The system is upgrading the software.
MEM-CARD CHECKSUM:	If the card-mem checksum fails, the system reboots without performing the upgrade. Retry the command with another software card-mem.
REPROGRAMMING MTP:	If the MTP programming fails, the Manager I will not be functional anymore, meaning that the rest of the upgrade (if it occurs) will not be visible and the MTP will not be present to monitor the health of the processor. The only recovery procedure is to power down and power up the system, since the presence of a software card-mem will cause a software upgrade.
ERASING MEMORY:	The rest of the memory is being erased.
REPROGRAMMING SPE:	This shows the status of the reprogramming. A total of 7 Mbytes has to be reprogrammed. If the reprogramming fails in the midst of upgrade, it will take the system into *SPE-down* mode. In this mode, the system technician can only reset the system or display alarms. The system should be reset and another upgrade attempted due to the detection of a software card-mem in the system.

FLASH TEXT CHECKSUM:	If the checksum fails, the software may or may not be healthy, but it will try to run for as long as it can until further system reset through system technician intervention.
REPLACE SOFTWARE MEM-CARD WITH TRANSLATION MEM-CARD:	The system technician is prompted by a beep and this text string on the Manager I to replace the software card-mem with the translation card-mem. The system boots without translation if the replacement is not done within 2 minutes. The only way to recover from this is to replace the card-mem and issue a *reset system 3* to read in the translations again.
UPGRADE COMPLETE:	The software upgrade is complete.

Maintenance Objects for R6csi

3

NOTE:
This document is not intended to solve all troubles. When the limits of these procedures are reached and the problem is not resolved, escalate the problem to a higher level of technical support. Escalation must conform to the procedures in the *Technical and Administration Plan*.

12V-PWR (12 Volt Power Supply)

MO Name (in Alarm Log)	Alarm Level	Initial Command to Run	Full Name of MO
12V-PWR	MINOR	test card-mem sh	12 Volt Power Supply
12V-PWR	WARNING	test card-mem sh	12 Volt Power Supply

The 12 Volt Power Supply unit in the Processor circuit pack is required for programming the on-board flash memory devices and the removable translation card. During the erase and write operations of a flash memory or translation card, the 12 volt power supply must be turned on by the software. For the read-only operation, the 12 volt power supply is not required.

If the 12-volt power supply cannot be turned on, all the erase and write operations to a flash device fail. Commands such as **save translation** and **save announcements** and features such as system upgrade, hard patching, and core dump always fail in this case.

Error Log Entries and Test to Clear Values

Table 3-1. 12 Volt Power Supply Error Log Entries

Error Type	Aux Data	Associated Test	Alarm Level	On/Off Board	Test to Clear Value
0[1]	0	Any	Any	Any	test card-mem
1[2]	Any	12 Volt Power Supply Test (#701)	MINOR	ON	test card-mem
257[3]	Any	12 Volt Power Supply Test (#701)	WARNING	ON	test card-mem

1. Run the Short Test Sequence first. If all tests pass, run the Long Test Sequence. Refer to the appropriate test description and follow the recommended procedures.
2. Software cannot turn on the 12 volt power supply to provide 12 volt power to the flash memory or to the translation card.
3. Software can turn on the 12 volt power supply, and 12 volt power is available. However, the software cannot turn the power supply off after operations are completed. The 12 volt power remains on. This error does not affect the normal operations involved in accessing the memory or the translation card.

System Technician-Demanded Tests: Descriptions and Error Codes

Always investigate tests in the order presented in the following table. By clearing error codes associated with the *12 Volt Power Supply Test* for example, you may also clear errors generated from other tests in the testing sequence. The 12 Volt Power Supply Test can be initiated through either the **test card-mem** command or the **test network-control** command.

Order of Investigation	Short Test Sequence	Long Test Sequence	ResetBoard Sequence	D/ND[1]
12 Volt Power Supply Test (#701)	X	X		ND
Memory Card Insertion Test (#695)[2]	X	X		ND
Memory Card Format and Read Test (#696) [2]	X	X		ND
Memory Card Match Test (#697)[2]	X	X		ND
Memory Card Write-Protected Test (#698)[2]	X	X		ND
Memory Card Directory Recovery Test (#699)[2]	X	X		ND
Memory Card Translation Data Integrity Test (#694)[2]		X		ND
Memory Card Erase/Write/Read Test (#693)[2]		X		ND

1. D = Destructive; ND = Nondestructive
2. Refer to "CARD-MEM (Memory Card)" information for a description of this test.

12 Volt Power Supply Test (#701)

This test is nondestructive. The purpose of the test is to diagnose the 12 volt power supply unit in the TN798 Processor circuit pack. No erase and write-to-memory operations are started or verified during the test. The contents of flash memory and of the memory card should not be changed.

The test turns on the power supply and verifies that 12 volt power appears by reading the control register in the Processor circuit pack. After the power supply is turned on, the maintenance software waits for three seconds before verifying the appearance of 12 volt power. After the 12 volt power supply can be turned on and verified, the test turns the power supply off and then verifies that the power is off. The control register is read again for the verification.

If, while this test is running, an application attempts to erase or write a flash memory or a memory card, this test remains active, and the application is barred.

Table 3-2. 12 Volt Power Supply Test

Error Code	Test Result	Description/Recommendation
1192	ABORT	12 volt power supply is being used by other applications or by maintenance. 1. The 12 volt power supply is in use. Retry the **test card-mem** command after the maintenance operation application is completed.
2106 2114	ABORT	Internal system error 1. Retry the command at 1-minute intervals a maximum of 5 times.
109	FAIL	The 12 volt power supply unit in the TN798 cannot be turned on by the software. 1. Retry the **test card-mem** command one more time to verify the operation of the 12 volt power supply in the TN798. 2. If the failure indicated by Error Code 109 persists, the TN798 must be replaced. Follow the standard procedure for replacing the TN798. 3. After the new Processor circuit pack is inserted, enter the **test card-mem** command to verify the operations of the 12 volt power supply.

Continued on next page

Table 3-2. 12 Volt Power Supply Test — *Continued*

Error Code	Test Result	Description/Recommendation
110	FAIL	The 12 volt power supply unit in the TN798 cannot be turned off by the software. 1. Retry the **test card-mem** command one more time to verify the operation of the 12 volt power supply. 2. If the failure indicated by Error Code 110 persists, the TN798 should be scheduled for replacement during the next regular maintenance visit. This failure does not cause any service disruption.
	PASS	The 12 volt power supply unit in the TN798 is functioning correctly.

ADM-CONN (Administered Connection)

MO Name (in Alarm Log)	Alarm Level	Initial Command to Run[1]	Full Name of MO
ADM-CONN	MAJOR	status administered-connection N	Administered Connection
ADM-CONN	MINOR	status administered-connection N	Administered Connection
ADM-CONN	WARNING	status administered-connection N	Administered Connection

1. Where N is an appropriate Administered Connection number determined via the PORT field from the Alarm or Error Log.

An Administered Connection provides an end-to-end connection between two access endpoints or data modules. This connection is automatically established when the administered connection is administered and is due to be active. An error is logged when an administered connection cannot be established or when an established administered connection fails. An alarm is logged when a connection cannot initially be established or fails and cannot be reestablished. An alarming strategy is supported on a per administered connection basis. An alarm is raised for a connection when either the number of consecutive failed attempts to establish the connection reaches the alarm threshold or it can be determined that a failed attempt to establish was due to an administered error. The alarm raised ("major," "minor," "warning," or "none") is specified in the "Alarm Type" field of the Administered Connection Administration Form.

Error Log Entries and Test to Clear Values

Table 3-3. Administered Connection Error Log Entries

Error Type	Aux Data	Associated Test	Alarm Level	On/Off Board	Test to Clear Value
0 (a)(b)(c)(k)	Any	None	Any	OFF	None
1 (a)(b)(c)(d)(e)	Any	None	Any	OFF	None
2 (a)(b)(c)(f)	Any	None	Any	OFF	None
6 (a)(b)(c)(g)	Any	None	Any	OFF	None
16 (a)(b)(c)(k)	Any	None	Any	OFF	None
17 (a)(c)(h)	Any	None	Any	OFF	None
18 (a)(b)(c)(i)	Any	None	Any	OFF	None

Continued on next page

Table 3-3. Administered Connection Error Log Entries — *Continued*

Error Type	Aux Data	Associated Test	Alarm Level	On/Off Board	Test to Clear Value
21 (a)(b)(c)(g)	Any	None	Any	OFF	None
22 (a)(b)(c)(d)(j)	Any	None	Any	OFF	None
28 (a)(b)(c)(d)(e)	Any	None	Any	OFF	None
29 (a)(b)(c)(k)	Any	None	Any	OFF	None
31 (a)(b)(c)(g)	Any	None	Any	OFF	None
34 (a)(b)(c)(l)	Any	None	Any	OFF	None
38 (a)(b)(c)(m)	Any	None	Any	OFF	None
40 (a)(b)(c)(l)	Any	None	Any	OFF	None
41 (a)(b)(c)(m)	Any	None	Any	OFF	None
42 (a)(b)(c)(l)	Any	None	Any	OFF	None
43 (a)(b)(c)(q)	Any	None	Any	OFF	None
44 (a)(b)(c)(l)	Any	None	Any	OFF	None
50 (a)(b)(c)(d)(n)	Any	None	Any	OFF	None
52 (a)(b)(c)(d)(o)	Any	None	Any	OFF	None
54 (a)(b)(c)(o)	Any	None	Any	OFF	None
58 (a)(b)(c)(l)	Any	None	Any	OFF	None
65 (a)(b)(c)(d)(p)	Any	None	Any	OFF	None
66 (a)(b)(c)(d)(p)	Any	None	Any	OFF	None
69 (a)(b)(c)(d)(p)	Any	None	Any	OFF	None
81 (a)(b)(c)(q)	Any	None	Any	OFF	None
82 (a)(b)(c)(r)	Any	None	Any	OFF	None
88 (a)(b)(c)(d)(s)	Any	None	Any	OFF	None
91 (a)(b)(c)(q)	Any	None	Any	OFF	None
95 (a)(b)(c)(q)	Any	None	Any	OFF	None
96 (a)(b)(c)(q)	Any	None	Any	OFF	None
97 (a)(b)(c)(q)	Any	None	Any	OFF	None
98 (a)(b)(c)(q)	Any	None	Any	OFF	None
99 (a)(b)(c)(q)	Any	None	Any	OFF	None
100 (a)(b)(c)(q)	Any	None	Any	OFF	None
102 (a)(b)(c)(i)	Any	None	Any	OFF	None

Continued on next page

Table 3-3. Administered Connection Error Log Entries — *Continued*

Error Type	Aux Data	Associated Test	Alarm Level	On/Off Board	Test to Clear Value
111 (a)(b)(c)(q)	Any	None	Any	OFF	None
127 (a)(b)(c)(g)	Any	None	Any	OFF	None

Notes:

a. These errors have no specific test associated with them. Refer to Notes b through p for an explanation and appropriate action.

b. These errors are valid only for administered connection established over ISDN facilities; only error 127 is valid for administered connection established over non-ISDN facilities (or between two endpoints on the same switch).

- Aux Data 1—Administered connection establishment failed
- Aux Data 2—Active administered connection failed; attempting reestablishment via auto restoration
- Aux Data 3—Auto restoration failed
- Aux Data 4—Active administered connection failed; attempting reestablishment via fast retry
- Aux Data 5—Fast retry failed

c. These errors are typically associated with administrative problems and are not expected to be of a temporary nature. Therefore, the administered connection is not retried and the failure is alarmed immediately (the alarm threshold specified by the customer is ignored).

d. The address of the destination endpoint is: an unassigned number (1); has an invalid number format (28); or is restricted form terminating calls ("Access Denied") [due to COR (Class of Restriction)]. Verify that the destination address is correct and that the destination endpoint is administered. The destination endpoint is not administered on the switch where this error is logged.

e. A request has been made to use a transit network or common carrier that cannot be accessed. Check the routing pattern used by this Administered Connection and verify that the inter-exchange carrier specified is correct.

f. The exact failure cause is unknown or has been mapped to one of these values. If this is not a temporary condition, try reversing the direction of the Administered Connection (that is, originate the Administered Connection from the destination switch). This may yield another failure cause.

g. The destination endpoint is not available. Check the status of the destination endpoint (using **status access-endpoint** or **status data-module**) and verify that the endpoint is not busy or otherwise unavailable (for example, out-of-service). The status for the destination endpoint is not available on the switch where this error is logged.

h. This switch sent an ISDN message to another switch, which either did not respond (18) or did not respond within the allotted time (102). This could be due to link failure or congestion or outage at the other switch.

i. The address of the destination endpoint has changed. Verify that the new address is correct and change the Administered Connection accordingly. The destination endpoint is not administered on the switch logging this error.

j. Indicate that a resource (for example, a circuit or bearer capability) required by the administered cConnection is not presently available.

k. A network failure (38) or temporary failure (41) has occurred. Error Log entries for other maintenance objects (for example, DS1-BD or ISDN-LNK) may indicate a local problem.

l. A request to use a network service has been denied because the service has not been purchased. Check the routing pattern used by this Administered Connection and verify that the service type is correct. If the service type appears correct, check with the customer or network provider or both to determine what services have been purchased by the customer.

m. Indicate that outgoing calls may be barred on the originating switch (52) or that incoming calls may be barred on the destination switch (54). To restore an administered connection failure, issue the **status administered connection** command for current administered connection state (observe the retry count). If the administered connection state is "failed," then verify and correct the Administered Connection Administration Form.

n. The requested bearer capability (65), channel type (66), or facility (69) is not implemented or is unknown to the network. Check the address of the destination endpoint and the routing pattern used by this Administered Connection, and verify that they are correct and available.

o. These errors indicate that an ISDN protocol error has occurred.

p. The destination endpoint (or some intermediate facility) is not compatible with the originating endpoint. Check the BCC fields of the routing pattern used by this Administered Connection. Also, check if the originating and destination endpoints are compatible (for example, the originating access endpoint is voice-grade data, and the destination access endpoint is 64k data).

ADX8D-BD (AUDIX Circuit Pack)

MO Name (in Alarm Log)	Alarm Level	Initial Command To Run[1]	Full Name of MO
ADX8D-BD	MINOR or WARNINGS	test board PCSS sh	AUDIX Circuit Pack

1. Where P is the port network number (1 for PPN); C is the carrier designation (for example, A, B,or C); SS is the address of the slot in the carrier where the circuit pack is located (for example, 01, 02, ..., etc.).

The ADX8D-BD maintenance object represents a TN566/TN2169 DEFINITY AUDIX circuit pack (sometimes called Embedded AUDIX) operating in digital-port (DP) mode. For circuit pack problems, see “XXX-BD (Common Port Circuit Pack)”. Port level problems are covered by ADX8D-PT.

DEFINITY AUDIX consists of 2 circuit packs that occupy 4 slots in a port cabinet. The tests described in this manual apply only to switch-side maintenance which tests circuit pack components related to the TDM bus interface. The AUDIX system has an extensive maintenance strategy that is described in *DEFINITY AUDIX System Maintenance*, 585-300-110.

ADX8D-PT (AUDIX Digital Port)

MO Name (in Alarm Log)	Alarm Level	Initial Command To Run[1]	Full Name of MO
ADX8D-PT	MINOR	test port PCSSpp l	AUDIX Digital Port
ADX8D-PT	WARNING	test port PCSSpp sh	AUDIX Digital Port

1. Where P is the port network number (1 for PPN); C is the carrier designation (for example, A, B, or C); SS is the address of the slot in the carrier where the circuit pack is located (for example, 01, 02, ..., etc.); and pp is the 2-digit port number (for example, 01).

The ADX8D-PT maintenance object represents a port on a TN566/TN2169 DEFINITY AUDIX circuit pack (sometimes called Embedded AUDIX) operating in digital-port (DP) mode. The maintenance strategy for ports on the TN566 operating in control-link mode is described in ADX16A-PT.

The tests described in this section apply only to switch-side maintenance which tests circuit pack components related to the TDM bus interface. The AUDIX system has an extensive maintenance strategy that is described in *DEFINITY AUDIX System Maintenance*, 585-300-110.

AUDIX resides on a combined pair of circuit packs: the TN566 Multifunction Board (MFB) and the TN2169 Alarm Board (ALB). Because of its size this combination occupies 4 slots, but only 1 slot is functional as far as the switch is concerned. The other 4 slots are seen by the switch as ‘‘AUDIX-reserved’’ slots (or ADXDP-RS/ADX8D-RS.)

In DP mode the TN566 pack supports up to 8 voice ports, each with a primary information channel and a secondary information channel. Ports are administered in increments of 2. When a call to a station with an AUDIX login is not answered, AUDIX answers the call using 1 of the available voice ports.

Unlike other AUDIX systems, DEFINITY AUDIX is not an adjunct.

CAUTION:

Never do any of the following without first shutting down AUDIX. Follow instructions in the ‘‘Power Down AUDIX System’’ section in Chapter 1, ‘‘Maintenance for R6csi Compact Modular Cabinets’’.

Error Log Entries and Test to Clear Values

Table 3-4. DEFINITY AUDIX Digital Port Error Log Entries

Error Type	Aux Data	Associated Test	Alarm Level	On/Off Board	Test to Clear Value
0[1]	0	Any	Any	Any	test port PCSSpp sh r 1
1 (a)	40987	None	WARNING	OFF	
1 (b)	1 to 20	None	WARNING	OFF	
15 (c)	Any	None			
18 (d)	0	busyout port PCSSpp	WARNING	OFF	release port PCSSpp
23 (e)	0	None	WARNING	OFF	
130 (f)		None	WARNING	ON	test port PCSSpp sh
257 (g)	40971	None			
513 (h)	Any	None			
1537 (i)	40968	None	WARNING	OFF	
1793		Voice & Ctrl. Local Loop Test (#13)	MIN/WRN[2]	ON	test port PCSSpp l r 3
2049		NPE Crosstalk Test (#9)	MIN/WRN[2]	ON	test port PCSSpp l r 3
2305 (j)	40967	None			
3840 (k)	40965	None			
3840 (l)	41029	None			

1. Run the Short Test Sequence first. If all tests pass, run the Long Test Sequence. Refer to the appropriate test description and follow the recommended procedures.
2. Minor alarms on this MO may be downgraded to Warning alarms based on the values used in the **set options** command.

Notes:

a. The user may experience a noisy port or link. This is an off-board problem that is detected by the port circuit. If this problem exists, replace the circuit pack (see caution at the beginning of this section). Once the problem is resolved, the alarm is retired after a predetermined time.

b. At least 15 off-board problems have been detected with the link to the voice port. When an error with the link is detected, an on-board counter is incremented. Also see Note (a).

c. This is an internal type error that occurs when an audit request fails.

d. The port is busied-out by command. You can release the port via the **release port** PCSSpp command.

e. The circuit pack is administered but not physically installed. The alarm will clear when a circuit pack is inserted.

f. The circuit pack has been removed or has been insane for more than 21 minutes. To clear the error, reinsert or replace the AUDIX circuit pack (see caution at the beginning of this section).

g. Something is interfering with transmitting to the voice port. This is usually an on-board problem and can be ignored if no user complaints are received.

h. AUDIX is not available to the switch, possibly due to a busyout on the AUDIX system. Check out the AUDIX system referring *DEFINITY AUDIX System Maintenance*, 585-300-110, if necessary.

i. An in-line maintenance error has generated an off-board warning due to some problem with the link to the voice port. This can be ignored if no user complaints are received. If the problem persists, replace the circuit pack (see caution at the beginning of this section). Once the problem is resolved, the alarm is retired after a certain period of time.

j. The link between the circuit pack and the voice port is successfully reset. No craft action is necessary.

k. No voice ports are connected to the DEFINITY AUDIX circuit pack. No maintenance action is required.

l. The message buffer in the circuit pack is full.

System Technician-Demanded Tests: Descriptions and Error Codes

Always investigate tests in the order presented in the table below when you are inspecting errors in the system. By clearing error codes associated with the *Voice and Control Channel Local Loop Around Test* for example, you may also clear errors generated from other tests in the testing sequence.

Order of Investigation	Short Test Sequence	Long Test Sequence	D/ND[1]
Voice and Control Channel Local Loop Around Test (#13)		X	ND
NPE Crosstalk Test (#9)		X	ND

1. D = Destructive; ND = Nondestructive

NO-OP Tests

The maintenance strategy for DEFINITY AUDIX emulates the one for DIG-LINE. The tests listed below apply only to DIG-LINE and not to DEFINITY AUDIX. These are referred to as *NO-OP* tests, and they always return PASS.

- Electronic Power Feed Test (#11)
- Station Lamp Updates Test (#16)
- Station (Digital) Audits Test (#17)

NPE Crosstalk Test (#9)

This test verifies that this port's NPE channel talks on the selected time slot and that it never crosses over to time slots reserved for other connections. If the NPE is not working correctly, one-way and noisy connections may be observed. This test is part of a port's Long Test Sequence, and it takes about 20 to 30 seconds to complete.

Crosstalk testing is performed on both the primary information channel (voice) and on the secondary information channel (data) associated with each DEFINITY AUDIX port. If this test fails on either channel, the voice port is taken out-of-service.

Table 3-5. TEST #9 NPE Crosstalk Test

Error Code	Test Result	Description/Recommendation
1	ABORT	During testing of the primary information channel, system resources may not have been available. Also, the port may have been busy during the test. 1. Check the port status. Use the **display port PCSSpp** command to determine the voice port extension of the port. Use the **status station** command to determine the service state of the port. If the service state indicates that the port is in use, you must wait until the port is idle. 2. When the port is idle, retry the command at 1-minute intervals a maximum of 5 times.
2	ABORT	System resources may not have been available, or the port may have been busy during the test. 1. Retry the command at 1-minute intervals a maximum of 5 times

Continued on next page

Table 3-5. TEST #9 NPE Crosstalk Test — *Continued*

Error Code	Test Result	Description/Recommendation
1000	ABORT	System resources required to run this test are not available. The port may be in use. 1. Use the **display port PCSSpp** command to determine the voice port extension of the port. Use the **status station** command to determine the service state of the port. If the service state indicates that the port is in use, you must wait until the port is idle before retesting. 2. When the port is idle, retry the command at 1-minute intervals a maximum of 5 times.
1001	ABORT	System resources required to run this test are not available 1. Retry the command at 1-minute intervals a maximum of 5 times..
1002	ABORT	The system could not allocate time slots for the test. The system may be under heavy traffic conditions, or it may have time slots out-of-service due to TDM-BUS errors. Refer to “TDM-BUS” to diagnose any active TDM-BUS errors. 1. If system has no TDM-BUS errors, and if it is not handling heavy traffic, retry the command at 1-minute intervals a maximum of 5 times.
1003	ABORT	The system could not allocate a tone receiver for the test. The system may be oversized for the number of Tone Detectors present, or some Tone Detectors may be out-of-service. 1. Resolve any “TTR-LEV” errors. 2. Resolve any “TONE-PT” errors. Retry the command at 1-minute intervals a maximum of 5 times.
1004	ABORT	The port was put in use during the test. The test has been aborted. Use the **display port PCSSpp** command to determine the voice port extension of the port. Use the **status station** command to determine the service state of the port. If the port is in use, wait until the port is idle before testing.
1020	ABORT	Test disabled by background testing. Use the **status station** command to determine when the voice port is available for testing.
2000	ABORT	Response to the test request was not received within the allowable time period. 1. Retry the command at 1-minute intervals a maximum of 5 times.
1 2	FAIL	The NPE of the tested port is transmitting in error. This causes noisy and unreliable connections. Failure code 1 indicates that the Crosstalk test failed on the primary channel. Failure code 2 indicates that the Crosstalk test failed on the secondary channel. 1. Replace the circuit pack.

Continued on next page

Table 3-5. TEST #9 NPE Crosstalk Test — *Continued*

Error Code	Test Result	Description/Recommendation
	PASS	The port is using its allocated time slots correctly. 1. To be sure that this is not an intermittent problem, repeat this test up to a maximum of 10 times to make sure it continues to pass. 2. If complaints still exist, examine the connections.

Voice and Control Channel Local Loop Test (#13)

This test checks the information and control channels between the Switch Processing Element (SPE) and the DEFINITY AUDIX port circuit. First, the primary information (voice) channel loop back test is run.

While the primary information channel is still looped around, the Control Channel Loop Around Test is performed. The Loop Around Test for the secondary information (data) channel is then performed. This test is the same as the primary information channel loop around test.

Next, a Conference Test is implemented for the primary information channel. This test is the same as Conference Test #6.

Only one value (Pass, Fail, or Abort) is generated as a result of the four tests run. If any test fails or aborts, the sequence is stopped.

Table 3-6. TEST #13 Voice and Control Channel Local Loop Test

Error Code	Test Result	Description/Recommendation
	ABORT	Internal system error. 1. Retry the command at 1-minute intervals a maximum of 5 times.
1000	ABORT	System resources required to run this test are not available. The port may be in use. Use the **display port PCSSpp** command to determine the voice port extension of the port. Use the **status station** command to determine the service state of the port. If the service state indicates that the port is in use, you must wait until the port is idle before retesting. 1. Retry the command at 1-minute intervals a maximum of 5 times.

Continued on next page

Table 3-6. TEST #13 Voice and Control Channel Local Loop Test — *Continued*

Error Code	Test Result	Description/Recommendation
1001	ABORT	System resources required for this test are not available. 1. Retry the command at 1-minute intervals a maximum of 5 times.
1002	ABORT	The system could not allocate time slots for the test. The system may be under heavy traffic conditions, or may have time slots that are out-of-service due to TDM-BUS errors. 1. If the system has no TDM-BUS errors, and is not handling heavy traffic, retry the command at 1-minute intervals a maximum of 5 times.
1003	ABORT	The system could not allocate a tone receiver for the test. The system may be oversized for the number of Tone Detectors present, or some Tone Detectors may be out-of-service. 1. Resolve any “TTR-LEV” errors. 2. Resolve any “TONE-PT” errors. 3. If neither condition exists, retry the command at 1-minute intervals a maximum of 5 times.
1004	ABORT	The port was put in use during the test. Use the **display port PCSSpp** to determine the voice port extension of the port. Use the **status station** command to determine the service state of the port. If the service state indicates that the port is in use, you must wait until the port is idle before retesting. 1. Retry the command at 1-minute intervals a maximum of 5 times.
2000	ABORT	Response to the test was not received within the allowable time period.
2100	ABORT	Could not allocate the necessary system resources for this test. 1. Retry the command at 1-minute intervals a maximum of 5 times.

Continued on next page

Table 3-6. TEST #13 Voice and Control Channel Local Loop Test — *Continued*

Error Code	Test Result	Description/Recommendation
7	FAIL	Conference Test failed on the primary channel. Some users may not notice a disruption in service. In extreme cases, the conferencing feature may not work at all.
14	FAIL	The primary voice channel is not transmitting properly. User impact may range from no noticeable effect to loss of use of this port.
15	FAIL	The control channel between the processor and DEFINITY AUDIX circuit pack is not transmitting properly. User impact may range from no noticeable effect to loss of use of this port. This failure could also be disruptive to other users.
16	FAIL	The secondary voice channel is not transmitting properly. User impact may range from no noticeable effect to loss of use of this port.
None	FAIL	The test failed for reasons external to the DEFINITY AUDIX circuit pack. 1. Run circuit pack tests to check the Tone Generator circuit pack and the Tone Detector circuit pack by using the **test board PCSS s** command. 2. Resolve any problems that are detected on the Tone Generator circuit pack or Tone Detector circuit pack. 3. If the Tone Generator and Tone Detector circuit packs are functioning properly, and if the test still fails, replace the AUDIX circuit pack (see precaution at the beginning of this section).
	PASS	Voice and Control Channel Local Loop test passed. All channels are transmitting properly. 1. To be sure that this is not an intermittent problem, repeat this test up to 10 times and see if it continues to pass. 2. If complaints still exist, examine the connections.

ADX16D-B (16 Port AUDIX Circuit Pack)

MO Name (in Alarm Log)	Alarm Level	Initial Command To Run[1]	Full Name of MO
ADX16D-B	MINOR	test board PCSS sh	AUDIX Circuit Pack
ADX16D-B	WARNING	test board PCSS sh	AUDIX Circuit Pack

1. Where P is the port network number (1 for PPN); C is the carrier designation (for example, A, B, or C); SS is the address of the slot in the carrier where the circuit pack is located (for example, 01, 02, ..., etc.).

The ADX16D-BD maintenance object represents a TN566/TN2169 DEFINITY AUDIX circuit pack combination operating in 16 port mode digital (DP). For circuit-pack-level problems, see “XXX-BD (Common Port Circuit Pack)”. Port-level maintenance is covered by ADX16D-PT.

DEFINITY AUDIX consists of 2 circuit packs that occupy 4 slots on a port carrier. The tests described in this manual apply only to switch-side maintenance which tests circuit pack components related to the TDM bus interface. The AUDIX system has an extensive maintenance strategy of its own that is described in *DEFINITY AUDIX System Maintenance*, 585-300-110.

ADX16A-BD (AUDIX Circuit Pack)

MO Name (in Alarm Log)	Alarm Level	Initial Command To Run[1]	Full Name of MO
ADXCL-BD or \ADX16A-BD	MINOR, or WARNINGS	test board PCSS sh	AUDIX Circuit Pack

1. Where P is the port network number (1 for PPN); C is the carrier designation (for example, A, B, or C); SS is the address of the slot in the carrier where the circuit pack is located (for example, 01, 02, ..., etc.).

The ADX16A-BD maintenance object represents a TN566/TN2169 DEFINITY AUDIX circuit pack combination operating in control-link (CL) mode. For circuit-pack-level problems, see “XXX-BD (Common Port Circuit Pack)”. Port-level maintenance is covered by ADX16A-PT.

DEFINITY AUDIX consists of 2 circuit packs that occupy 4 slots on a port carrier. The tests described in this manual apply only to switch-side maintenance which tests circuit pack components related to the TDM bus interface. The AUDIX system has an extensive maintenance strategy that is described in *DEFINITY AUDIX System Maintenance*, 585-300-110.

ADX16D-P (16-Port AUDIX Digital Port)

MO Name (in Alarm Log)	Alarm Level	Initial Command To Run[1]	Full Name of MO
ADX16D-P	MINOR or WARNINGS	test port PCSSpp l	AUDIX Digital Port

1. Where P is the port network number (1 for PPN); C is the carrier designation (for example, A, B, or C); SS is the address of the slot in the carrier where the circuit pack is located (for example, 01, 02, ..., etc.); and pp is the 2-digit port number (for example, 01).

CAUTION:
Never do any of the following without first shutting down AUDIX. Follow instructions in the "Power Down AUDIX System" section in Chapter 1, "Maintenance for R6csi Compact Modular Cabinets".

The ADX16D-P maintenance object represents a port on a TN566/TN2169 DEFINITY AUDIX circuit pack operating in digital-port (DP) mode. The maintenance strategy for ports on the TN566 operating in control-link mode is described in ADX16A-PT.

The tests described in this section apply only to switch-side maintenance which tests circuit pack components related to the TDM bus interface. The AUDIX system has an extensive maintenance strategy that is described in *DEFINITY AUDIX System Maintenance*, 585-300-110.

AUDIX resides on a combined pair of circuit packs: the TN566 Multifunction Board (MFB) and the TN2169 Alarm Board (ALB). Because of its size this combination occupies 5 slots, but only 1 slot is functional as far as the system is concerned. The other 4 slots are seen by the switch as "AUDIX-reserved" slots (or ADX16-RES/ADX16D-RS).

In 16 Port DP mode, the TN566 pack supports up to 16 voice ports, each with a primary information channel and a secondary information channel. Ports are administered in increments of two. When a call to a station with an AUDIX login is not answered, AUDIX answers the call using one of the available voice ports.

Unlike other AUDIX systems, DEFINITY AUDIX is not an adjunct.

Error Log Entries and Test to Clear Values

Table 3-7. DEFINITY AUDIX Digital Port Error Log Entries

Error Type	Aux Data	Associated Test	Alarm Level	On/Off Board	Test to Clear Value
0[1]	0	Any	Any	Any	test port PCSSpp sh r 1
1(a)	40987	None	WARNING	OFF	
1(b)	1 to 20	None	WARNING	OFF	
15(c)	Any	None			
18(d)	0	busyout port PCSSpp	WARNING	OFF	release port PCSSpp
23(e)	0	None	WARNING	OFF	
130(f)		None	WARNING	ON	test port PCSSpp sh
257(g)	40971	None			
513(h)	Any	None			
1537(i)	40968	None	WARNING	OFF	
1793		Voice and Control Local Loop TEST (#13)	MIN/ WRN[2]	ON	test port PCSSpp l r 3
2049		NPE Crosstalk Test (#9)	MIN/ WRN[2]	ON	test port PCSSpp l r 3
2305(j)	40967	None			
3840(k)	40965	None			
3840(l)	41029	None			

1. Run the Short Test Sequence first. If all tests pass, run the Long Test Sequence. Refer to the appropriate test description and follow the recommended procedures.
2. Minor alarms may be downgraded to Warning alarms based on the values used in the **set options** command.

Notes:

a. The user may experience a noisy port or link. This is an off-board problem that is detected by the port circuit. If this problem exists, replace the circuit pack (see caution at the beginning of this section). Once the problem is resolved, the alarm is retired after a predetermined time.

b. At least 15 off-board problems have been detected with the link to the voice port. When an error with the link is detected, an on-board counter is incremented. Also see Note a, above.

c. This is an internal type error that occurs when an audit request fails.

d. The port is busied-out by command. Release the port with the **release port PCSSpp** command.

e. The circuit pack is administered but not physically installed. The alarm will clear when a circuit pack is inserted.

f. The circuit pack has been removed or has been insane for more than 21 minutes. To clear the error, reseat or replace the AUDIX circuit pack (see caution at the beginning of this section).

g. Something is interfering with transmitting to the voice port. This is usually an on-board problem and can be ignored if no user complaints are received.

h. AUDIX is not available to the switch, possibly due to a busyout on the AUDIX system. Refer to *DEFINITY AUDIX System Maintenance*, 585-300-110, if necessary.

i. An in-line maintenance error has generated an off-board warning due to some problem with the link to the voice port. This can be ignored if no user complaints are received. If the problem persists, replace the circuit pack (see caution at the beginning of this section). Once the problem is resolved, the alarm is retired after a certain period of time.

j. The link between the circuit pack and the voice port is successfully reset. No craft action is necessary.

k. No voice ports are connected to the DEFINITY AUDIX circuit pack. No maintenance action is required.

l. The message buffer in the circuit pack is full.

System Technician-Demanded Tests: Descriptions and Error Codes

Always investigate tests in the order presented in the table below. By clearing error codes associated with the *Voice and Control Channel Local Loop Around Test* for example, you may also clear errors generated from other tests in the testing sequence.

Order of Investigation	Short Test Sequence	Long Test Sequence	D/ND[1]
Voice and Control Channel Local Loop Around Test (#13)		X	ND
NPE Crosstalk Test (#9)		X	ND

1. D = Destructive; ND = Nondestructive

NO-OP Tests

The maintenance strategy for DEFINITY AUDIX emulates the one for DIG-LINE. The tests listed below apply only to DIG-LINE and not to DEFINITY AUDIX. These tests always return PASS.

- Electronic Power Feed Test (#11)
- Station Lamp Updates Test (#16)
- Station (Digital) Audits Test (#17)
- Digital Terminal Remote Loop Around Test (1201)

NPE Crosstalk Test (#9)

This test verifies that this port's NPE channel talks on the selected time slot and that it never crosses over to time slots reserved for other connections. If the NPE is not working correctly, one-way and noisy connections may be observed. This test is part of a port's Long Test Sequence, and it takes about 20 to 30 seconds to complete.

Crosstalk testing is performed on both the primary information channel (voice) and on the secondary information channel (data) associated with each DEFINITY AUDIX port. If this test fails on either channel, the voice port is taken out-of-service.

Table 3-8. TEST #9 NPE Crosstalk Test

Error Code	Test Result	Description/Recommendation
1	ABORT	During testing of the primary information channel, system resources may not have been available. Also, the port may have been busy during the test. 1. Check the port status. Use the **display port PCSSpp** command to determine the voice port extension of the port. Use the **status station** command to determine the service state of the port. If the port is in use, it is unavailable for this test. Wait until the port is idle. 2. Retry the command at 1-minute intervals a maximum of 5 times.
2	ABORT	System resources may not have been available, or the port may have been busy during the test. 1. Check if port is being used, retry the command at 1-minute intervals a maximum of 5 times.

Continued on next page

Table 3-8. TEST #9 NPE Crosstalk Test — *Continued*

Error Code	Test Result	Description/Recommendation
1000	ABORT	System resources required to run this test are not available. The port may be in use. Use the **display port PCSSpp** command to determine the voice port extension of the port. Use the **status station** command to determine the service state of the port. If the port is in use, it is unavailable for certain tests. Refer to “Status” commands in Chapter 8, "Maintenance Commands and Trouble-Clearing Aids", for a full description of all possible states. Wait until the port is idle before testing. 1. If the port status is idle, retry the command at 1-minute intervals a maximum of 5 times.
1001	ABORT	System resources required to run this test are not available. 1. Retry the command at 1-minute intervals a maximum of 5 times.
1002	ABORT	The system could not allocate time slots for the test. The system may be under heavy traffic conditions, or it may have time slots out-of-service due to TDM-BUS errors. 1. If system has no TDM-BUS errors, and if it is not handling heavy traffic, retry the command at 1-minute intervals a maximum of 5 times.
1003	ABORT	The system could not allocate a tone receiver for the test. The system may be oversized for the number of tone detectors present, or some tone detectors may be out-of-service. 1. Resolve any “TTR-LEV” errors in the Error Log. 2. Resolve any “TONE-PT” errors in the Error Log. 3. Retry the command at 1-minute intervals a maximum of 5 times.
1004	ABORT	The port was put in use during the test. The test has been aborted. Use the **display port PCSSpp** command to determine the voice port extension of the port. Use the **status station** command to determine the service state of the port. If the port is in use, it is unavailable for certain tests. Refer to “Status” commands in Chapter 8 for explanations of all possible states. Wait until the port is idle before testing.
1020	ABORT	Test disabled via background testing. Use the **status station** command to determine when the voice port is available for testing.
2000	ABORT	Response to the test request was not received within the allowable time period. 1. Retry the command at 1-minute intervals a maximum of 5 times.
1 2	FAIL	The NPE of the tested port was found to be transmitting in error. This causes noisy and unreliable connections. Failure code 1 indicates that the Crosstalk test failed on the primary channel. Failure code 2 indicates that the Crosstalk test failed on the secondary channel. 1. Replace the circuit pack (see caution at the beginning of this section).

Continued on next page

Table 3-8. TEST #9 NPE Crosstalk Test — *Continued*

Error Code	Test Result	Description/Recommendation
	PASS	The port is using its allocated time slots correctly. 1. To be sure that this is not an intermittent problem, repeat this test up to a maximum of 10 times to make sure it continues to pass. 2. If complaints still exist, examine the connections.

Note:

a. Retry the command at 1-minute intervals a maximum of 5 times.

Voice and Control Channel Local Loop Test (#13)

This test checks the information and control channels between the Switch Processing Element (SPE) and the DEFINITY AUDIX port circuit. The SPE sends a message to loop around both the information and control channels for the port. First, the primary information (voice) channel loop back test is run.

While the primary information channel is still looped around, the Control Channel Loop Around Test is performed. The Loop Around Test for the secondary information (data) channel is then performed. This test is the same as the primary information channel loop around test.

Next, a Conference Test is implemented for the primary information channel. This test is the same as Conference Test #6.

Only one value (Pass, Fail, or Abort) is generated as a result of the four tests run. If any test fails or aborts, the sequence is stopped.

Table 3-9. TEST #13 Voice and Control Channel Local Loop Test

Error Code	Test Result	Description/Recommendation
	ABORT	Internal system error. 1. Retry the command at 1-minute intervals a maximum of 5 times.

Continued on next page

Table 3-9. TEST #13 Voice and Control Channel Local Loop Test — *Continued*

Error Code	Test Result	Description/Recommendation
1000	ABORT	System resources required to run this test are not available. The port may be in use. Use the **display port PCSSpp** command to determine the voice port extension of the port. Use the **status station** command to determine the service state of the port. If the port is in use, it is unavailable for certain tests. Refer to “Status” commands in Chapter 8, "Maintenance Commands and Trouble-Clearing Aids" for explanations of all possible states. 1. Wait until the port is idle before retesting, then retry the command at 1-minute intervals a maximum of 5 times.
1001	ABORT	System resources required to run this test are not available. 1. Retry the command at 1-minute intervals a maximum of 5 times.
1002	ABORT	The system could not allocate time slots for the test. The system may be under heavy traffic conditions, or it may have time slots that are out-of-service due to TDM-BUS errors. Refer to “TDM-BUS” to diagnose TDM-BUS errors. 1. If the system has no TDM-BUS errors and if it is not handling heavy traffic, retry the command at 1-minute intervals a maximum of 5 times.
1003	ABORT	The system could not allocate a tone receiver for the test. The system may be oversized for the number of tone detectors present, or some tone detectors may be out-of-service. 1. Resolve any “TTR-LEV” errors. 2. Resolve any “TONE-PT” errors. 3. Retry the command at 1-minute intervals a maximum of 5 times.
1004	ABORT	The port was put in use during the test. The test has been aborted. Use the **display port PCSSpp** to determine the voice port extension of the port. Use the **status station** command to determine the service state of the port. If the port is in use, it is unavailable for certain tests. Wait until the port is idle before retesting. 1. Retry the command at 1-minute intervals a maximum of 5 times.
2000	ABORT	Response to the test request was not received within the allowable time period.
2100	ABORT	Could not allocate the necessary system resources for this test. 1. Retry the command at 1-minute intervals a maximum of 5 times.

Continued on next page

Table 3-9. TEST #13 Voice and Control Channel Local Loop Test — *Continued*

Error Code	Test Result	Description/Recommendation
7	FAIL	Conference Test failed on the primary channel. In some cases, users may not notice a disruption in service. In extreme cases, the conferencing feature may not work at all.
14	FAIL	The primary voice channel is not transmitting properly. User impact may range from no noticeable effect to loss of use of this port.
15	FAIL	The control channel between the processor and AUDIX is not transmitting properly. User impact may range from no noticeable effect to loss of use of this port. This failure could also be disruptive to other users.
16	FAIL	The secondary voice channel is not transmitting properly. User impact may range from no noticeable effect to loss of use of this port.
None	FAIL	The test failed for reasons external to the AUDIX. 1. Run circuit pack tests to check the tone generator circuit pack and the tone detector circuit pack by using the **test board PCSS s** command. 2. Resolve any problems detected on the tone generator circuit pack or tone detector circuit pack. 3. If the tone generator and tone detector circuit packs are functioning properly, and if the test still fails, replace the AUDIX (see caution at the beginning of this section).
	PASS	Voice and Control Channel Local Loop test passed. All channels are transmitting properly. 1. To be sure that this is not an intermittent problem, repeat this test up to 10 times and see if it continues to pass. 2. If complaints still exist, examine the connections.

ADX16A-PT (AUDIX Analog Line/Control Link)

MO Name (in Alarm Log)	Alarm Level	Initial Command To Run[1]	Full Name of MO
ADXCL-PT or ADX16A-PT	MINOR	test port PCSSpp l	AUDIX Analog Line/ Control Link
ADXCL-PT or ADX16A-PT	WARNING	test port PCSSpp sh	AUDIX Analog Line/ Control Link

1. Where P is the port network number (1 for PPN); C is the carrier designation (for example, A, B, or C); SS is the address of the slot in the carrier where the circuit pack is located (for example, 01, 02, ..., etc.); and pp is the 2-digit port number (for example, 01).

CAUTION:

Never do any of the following without first shutting down AUDIX. Follow instructions in the "Power Down AUDIX System" section in Chapter 1, "Maintenance for R6csi Compact Modular Cabinets".

The ADX16A-PT maintenance object represents a port on a TN566/TN2169 DEFINITY AUDIX circuit pack that is operating in control-link (CL) mode. For circuit-pack-level problems (ADX16A-BD or ANL-16-BD), see "XXX-BD (Common Port Circuit Pack)". For port-level problems with AUDIX operating in digital-port mode, see ADXDP-PT/ADX8D-PT.

The tests described in this section apply only to switch-side maintenance which tests circuit pack components related to the TDM bus interface. The AUDIX system has an extensive maintenance strategy that is described in *DEFINITY AUDIX System Maintenance*, 585-300-110.

AUDIX resides on a combined pair of circuit packs: the TN566 Multifunction Board (MFB) and the TN2169 Alarm Board (ALB). Because of its size this combination occupies 5 slots, but only 1 slot is functional as far as the switch is concerned. The other 4 slots are seen by the switch as ''AUDIX-reserved'' slots.

In CL mode the TN566 pack supports up to 16 voice ports. When a call to a station with an AUDIX login is not answered, AUDIX answers the call using one of the available voice ports.

Unlike other AUDIX systems, DEFINITY AUDIX is not an adjunct.

Error Log Entries and Test to Clear Values

Table 3-10. DEFINITY AUDIX Analog Line/Control Link Error Log Entries

Error Type	Aux Data	Associated Test	Alarm Level	On/Off Board	Test to Clear Value
0[1]	0	Any	Any	Any	test port PCSSpp sh r 1
1 (a)	40977	None			
18	0	busyout station <*extension*>	WRN	ON	release station *extension*
23 (b)	0	None	WRN	OFF	
130 (c)		None	WRN	ON	test port PCSSpp sh
257 (d)	40973	None			
513 (e)	Any	None			
1025 (f)		Loop Around Test (#161)	MIN/ WRN[2]	ON	test port *PCSSpp* l r 2
1281		Conference Test (#7)	MIN/ WRN[2]	ON	test port *PCSSpp* l r 2
1537		NPE Crosstalk Test (#6)	MIN/ WRN[2]	ON	test port *PCSSpp* l r 2

1. Run the Short Test Sequence first. If all tests pass, run the Long Test Sequence. Refer to the appropriate test description and follow the recommended procedures.
2. Minor alarms on this MO may be downgraded to Warning alarms based on the values used in the **set options** command.

Notes:

a. This is an in-line error and can only be resolved over time. This indicates that no terminal equipment was present when ringing was attempted. Execute the short **test port PCSSpp** command.

b. The circuit pack has been logically administered but not physically installed. The alarm will be cleared when the circuit pack is installed.

c. The circuit pack has been removed or has been insane for more than 11 minutes. To clear the error, reseat or replace the circuit pack.

d. This is an in-line error and can only be resolved over time. This error indicates that ringing voltage is absent. If only 1 analog circuit pack in the system has this problem, replace the circuit pack. If all analog circuit packs have this error, check the ringing generator.

e. AUDIX is not available to the switch. Check the AUDIX system, referring to *DEFINITY AUDIX System Maintenance*, 585-300-110.

f. The TDM bus is out of service. See the “TDM-BUS” section.

System Technician-Demanded Tests: Descriptions and Error Codes

Always investigate tests in the order presented in the table below. By clearing error codes associated with the *Loop Around Test #161* for example, you may also clear errors generated from other tests in the testing sequence.

Order of Investigation	Short Test Sequence	Long Test Sequence	D/ND[1]
Loop Around Test (#161)		X	ND
Conference Test (#7)		X	ND
NPE Crosstalk Test (#6)		X	ND

1. D = Destructive; ND = Nondestructive

NO-OP Tests

The maintenance strategy for DEFINITY AUDIX emulates the one for ANL-16-L. The tests listed below apply only to ANL-16-L and not to DEFINITY AUDIX. These tests always return PASS.

- Battery Feed Test (#35)
- Audits and Updates Test (#36)
- Station Present Test (#48)

Tests 36 and 48 ABORT when AUDIX is not running.

NPE Crosstalk Test (#6)

This test verifies that this port's NPE channel talks on the selected time slot and never crosses over to time slots reserved for other connections. If the NPE is not working correctly, one-way and noisy connections may be observed. This test is part of the long test sequence and takes about 25 seconds to complete.

Table 3-11. TEST #6 NPE Crosstalk Test

Error Code	Test Result	Description/ Recommendation
	ABORT	Could not allocate the necessary system resources for this test. 1. Retry the command at 1-minute intervals a maximum of 5 times.

Continued on next page

Table 3-11. TEST #6 NPE Crosstalk Test — *Continued*

Error Code	Test Result	Description/ Recommendation
1000	ABORT	System resources required to run this test are not available. The port may be busy with a valid call. Use the **display port PCSSpp** command to determine the station extension. Use the **status station** command to determine the service state of the port. If the port is in use, it is unavailable for certain tests. Wait until the port is idle before testing. 1. Retry the command at 1-minute intervals a maximum of 5 times.
1001	ABORT	Could not allocate the necessary system resources to run this test. 1. Retry the command at 1-minute intervals a maximum of 5 times.
1002	ABORT	The system could not allocate time slots for the test. The system may be under heavy traffic conditions or it may have time slots out-of-service due to TDM-BUS errors. Refer to TDM-BUS Maintenance documentation to diagnose any active TDM-BUS errors. 1. If system has no TDM-BUS errors and is not handling heavy traffic, then retry the command at 1-minute intervals a maximum of 5 times.
1003	ABORT	The system could not allocate a tone receiver for the test. The system may be oversized for the number of tone detectors present or some tone detectors may be out-of-service. 1. Resolve any “TTR-LEV” errors. 2. Resolve any “TONE-PT” errors. Then, retry the command at 1-minute intervals a maximum of 5 times.
1004	ABORT	The port was seized by a valid call during the test. The test has been aborted. Use the **display port PCSSpp** command to determine the station extension. Use the **status station** command to determine the service state of the port. If the port is in use, it is unavailable for certain tests. Wait until the port is idle before testing. 1. Retry the command at 1-minute intervals a maximum of 5 times.
1005	ABORT	This condition indicates that the test is not applicable when the analog port is used in a combined modem pool. This error can be ignored.
1018	ABORT	Test disabled via administration. 1. To enable the test for the particular analog station being tested, enter the **change station <extension>** command and change the ‘‘Test?’’ field on the Station Form from ‘‘n’’ to ‘‘y.’’
2000	ABORT	Response to the test request was not received within the allowable time period.
2012	ABORT	System could not respond to this request.
2100	ABORT	Could not allocate the necessary system resources for this test. 1. Retry the command at 1-minute intervals a maximum of 5 times.

Continued on next page

Table 3-11. TEST #6 NPE Crosstalk Test — *Continued*

Error Code	Test Result	Description/ Recommendation
Any	FAIL	The NPE of the tested port was found to be transmitting in error. This causes noisy and unreliable connections. 1. Replace the circuit pack.
	PASS	The port is correctly using its allocated time slots. User-reported troubles on this port should be investigated by using other port tests, by examining station wiring, or by examining the station.

Conference Circuit Test (#7)

This test verifies that the NPE channel for the port being tested can correctly perform the conferencing function.

Table 3-12. TEST #7 Conference Circuit Test

Error Code	Test Result	Description/Recommendation
	ABORT	Could not allocate the necessary system resources to run this test. (a)
1000	ABORT	System resources required to run test are not available. The port may be busy with a valid call. Use the **display port PCSSpp** command to determine the station extension. Use the **status station** command to determine the service state of the port. If the port is in use, wait until it is idle before retesting. 1. Retry the command at 1-minute intervals a maximum of 5 times.
1004	ABORT	The port was seized by a valid call during the test. The test has been aborted. Use the **display port PCSSpp** command to determine the station extension. Use the **status station** command to determine the service state of the port. If the port is in use, wait until it is idle before testing. 1. Retry the command at 1-minute intervals a maximum of 5 times.
1018	ABORT	Test disabled by administration. This only applies to analog stations. 1. To enable the test for the analog station being tested, enter the **change station <extension>** command and change the ‘‘Test?’’ field on the Station Form from ‘‘n’’ to ‘‘y.’’
2000	ABORT	Response to the test request was not received within the allowable time period.
2100	ABORT	Could not allocate the necessary system resources for this test. 1. Retry the command at 1-minute intervals a maximum of 5 times.

Continued on next page

Table 3-12. TEST #7 Conference Circuit Test — *Continued*

Error Code	Test Result	Description/Recommendation
Any	FAIL	The NPE of the tested port did not conference the tones correctly. This causes noisy and unreliable connections. 1. Replace the circuit pack.
	PASS	The port can correctly conference multiple connections. User-reported troubles on this port should be investigated by using other port tests and by examining station, trunk, or external wiring.

Loop Around Test (#161)

This test is designed to check the on-board transmission capabilities of the NPE on the analog port.

Table 3-13. TEST #161 Loop Around Test

Error Code	Test Result	Description/ Recommendation
	ABORT	Could not allocate the necessary system resources for this test. Try (a).
1000	ABORT	System resources required to run this test are not available. The port may be busy with a valid call. Use the **display port PCSSpp** command to determine the station extension. Use the **status station** command to determine the service state of the port. If the port is in use, wait until it is idle before testing. 1. If the port status is idle, retry the command at 1-minute intervals a maximum of 5 times.
1002	ABORT	The system could not allocate time slots for the test. The system may be under heavy traffic conditions or it may have time slots out-of-service due to TDM-BUS errors. Refer to “TDM-BUS” to diagnose TDM-BUS errors. 1. If system has no TDM-BUS errors and is not handling heavy traffic, try (a).
1003	ABORT	The system could not allocate a tone receiver for the test. The system may be oversized for the number of tone detectors present or some tone detectors may be out-of-service. 1. Resolve any “TTR-LEV” errors. 2. Resolve any “TONE-PT” errors. 3. If neither condition exists, retry the command at 1-minute intervals a maximum of 5 times.

Continued on next page

Table 3-13. TEST #161 Loop Around Test — *Continued*

Error Code	Test Result	Description/ Recommendation
1004	ABORT	The port was seized by a valid call during the test. The test has been aborted. Use the **display port PCSSpp** command to determine the station extension. Use the **status station** command to determine the service state of the port. If the port is in use, wait until the port is idle before testing. 1. Retry the command at 1-minute intervals a maximum of 5 times.
1018	ABORT	Test disabled by administration. To enable the test for the particular analog station being tested, enter the **change station <extension>** command and change the ‘‘Test?’’ field on the Station Form from ‘‘n’’ to ‘‘y.’’
2000	ABORT	Response to the test request was not received within the allowable time period.
2100	ABORT	Could not allocate the necessary system resources for this test. 1. Retry the command at 1-minute intervals a maximum of 5 times.
	FAIL	The reflective Loop Around Test failed. This causes noisy or unreliable connections or other users calling this port may hear an echo. 1. Replace the circuit pack.
	PASS	The port is able to provide an analog transmission path to the station equipment. User-reported troubles on this port should be investigated by using other port tests, by examining station wiring, or by examining the station.

ALARM-PT (ALARM PORT)

MO Name (in Alarm Log)	Alarm Level	Initial Command to Run[1]	Full Name of MO
ALARM-PT	MIN	test port PCSSpp l	Alarm-Port
ALARM-PT	WRN	test port PCSSpp sh	Alarm-Port

1. Where P is the port network number (1 for PPN); C is the carrier designation (for example, A, B, or C); SS is the address of the slot in the carrier where the circuit pack is located (for example, 01, 02, ..., etc.); and pp is the 2-digit port number (for example, 01).

The Alarm Port maintenance object provides on-board maintenance for an analog line port that is administered as an external device alarm port. Tests are provided to verify the analog line port's ability to detect an external device alarm. The External Device Alarm (EXT-DEV) maintenance object is used for the off-board external device alarm.

ANL-BD (Analog Line Circuit Pack)

MO Name (in Alarm Log)	Alarm Level	Initial Command to Run[1]	Full Name of MO
ANL-BD	MIN	test board PCSS sh	8-Port Analog Line Circuit Pack
ANL-BD	WRN	test board PCSS sh	8-Port Analog Line Circuit Pack
ANL-BD	MIN	test board PCSS sh	8-Port Neon Analog Line Circuit Pack
ANL-BD	WRN	test board PCSS sh	8-Port Neon Analog Line Circuit Pack
ANL-BD	MIN	test board PCSS sh	16-Port Neon Analog Line Circuit Pack
ANL-BD	WRN	test board PCSS sh	16-Port Neon Analog Line Circuit Pack

1. Where P is the port network number (1 for PPN); C is the carrier designation (for example, A, B, or C); and SS is the address of the slot in the carrier where the circuit pack is located (for example, 01, 02, ..., etc.).

Refer to "XXX-BD (Common Port Circuit Pack)" Maintenance documentation for circuit pack level errors. See also "ANL-LINE (8-Port Analog Line), ANL-NE-L (8-Port Neon Analog Line)", and "ANL-16-L (16-Port Neon Analog Line)" Maintenance documentation for related line information.

ANL-LINE (8-Port Analog Line), ANL-NE-L (8-Port Neon Analog Line)

MO Name (in Alarm Log)	Alarm Level	Initial Command to Run[1]	Full Name of MO
ANL-LINE	MIN	test port PCSSpp l	8-Port Analog Line
ANL-LINE	WRN	test port PCSSpp sh	8-Port Analog Line
ANL-NE-L	MIN	test port PCSSpp l	8-Port Neon Analog Line
ANL-NE-L	WRN	test port PCSSpp sh	8-Port Neon Analog Line

1. Where P is the port network number (1 for PPN); C is the carrier designation (for example, A, B, or C); SS is the address of the slot in the carrier where the circuit pack is located (for example, 01, 02, ..., etc.); and pp is the 2-digit port number (for example, 01).

The 8-Port Analog Line circuit packs are:

- TN742
- TN769
- TN467

These circuit packs provide 8 ports for single line on-premises or off-premises analog endpoints such as analog voice terminals, queue warning level lamp, recorded announcements, dictation machines, PagePac™ paging equipment, external alerting devices, modems, facsimile machines, and AUDIX voice ports. The TN769 supports a neon message waiting lamp. The other 8-port analog lines do not support the lamp.

Test #48 may cause some terminal equipment to ring briefly during daily maintenance. If this ringing is disturbing the customer or the terminal equipment, it should be disabled using the Tests field of the station administration screen. However, on some releases of the software, this action disables Tests #6, #47, and #35 as well as Test #48. Test #47 may cause a false alarm when the port is connected to off-premises equipment, some non-voice terminal equipment, and some loop equipment. If this is the case, then the test should be disabled using the Tests field of the **change station *<extension>*** command.

No maintenance of the terminal connected to the 8-Port Analog Line circuit pack or 8-Port Neon Analog Line circuit pack is performed, except to determine whether or not the terminal is connected. Failures of the neon message waiting lamp power (for ANL-NE-L only) and the common ringing application circuitry are reported as part of the Common Port Circuit Pack errors (see errors 1281 and 1793 in the XXX-BD (Common Port Circuit Pack) Maintenance documentation).

Hardware Error Log Entries and Test to Clear Values

Table 3-14. 8-Port Analog Line Error Log Entries

Error Type	Aux Data	Associated Test	Alarm Level	On/Off Board	Test to Clear Value
0[1]	0	Any	Any	Any	test port PCSSpp sh r 1
1 (a)	40960 40975 40977	None			
15 (b)	Any	Audits and Updates Test (#36)			
18	0	busyout station <extension>	WRN	OFF	release station <extension>
130 (c)		None	WRN	ON	test port PCSSpp sh
257 (d)		Station Present Test (#48)	WRN	OFF	test port PCSSpp sh r 3
513		Battery Feed Test (#35)	MIN/ WRN[2]	ON	test port PCSSpp sh r 2
769 (e)		Loop Around and Conference Test(#47)			test port PCSSpp l r 3
1025		NPE Crosstalk Test (#6)	MIN/ WRN[2]	ON	test port PCSSpp l r 3
1281 (f)					
1793 (f)					

1. Run the Short Test Sequence first. If all tests pass, run the Long Test Sequence. Refer to the appropriate test description and follow the recommended procedures.
2. Major or Minor alarms on this MO may be downgraded to Warning alarms based on the values used in the **set options** command.

Notes:

a. These are in-line errors and can only be resolved over time.

- 40960—indicates that too many simultaneous incoming ringing attempts were made on this board. Only four ports on a board may be ringing simultaneously. A fifth incoming call will cause an inline error from the board.
- 40975—indicates that the terminal equipment was on-hook when ring-tip was detected during ringing. This usually indicates a failure in the terminal equipment or the type of terminal has a low ringer impedance. Call the terminal equipment and verify that the terminal

rings. If the terminal doesn't ring, then replace it. Otherwise, issue the **test port PCSSpp** command, and follow the procedure for Test #48.

- 40977—indicates that no terminal equipment was connected when ringing was attempted. Run the Short Test via the **test port PCSSpp** command, and follow the procedure for the results of Test #48.

b. This is a software audit error that does not indicate any hardware malfunction. Run Short Test Sequence and investigate errors (if any).

c. This error type indicates that the circuit pack has been removed or has been insane for more than 11 minutes. To clear the error, reinsert or replace the circuit pack.

d. Test #48 may cause some terminal equipment to ring briefly during daily maintenance. If this ringing is disturbing the customer or the terminal equipment, it should be disabled via the **change station <extension>** command. However, on some releases of the software, this disables Tests #6, #47, and #35 as well as Test #48.

e. Test #47 may cause a false alarm when the port is connected to off-premises equipment, some non-voice terminal equipment, and some loop equipment. If this causes a false alarm, then disable the test by changing the Tests field of the **change station** command to "no."

f. Refer to "XXX-BD (Common Port Circuit Pack)" Maintenance documentation.

System Technician-Demanded Tests: Descriptions and Error Codes

Always investigate tests in the order presented in the table below when inspecting errors in the system. By clearing error codes associated with the *Battery Feed Test*, for example, you may also clear errors generated from other tests in the testing sequence.

Table 3-15. System Technician-Demanded Tests: ANL-LINE

Order of Investigation	Short Test Sequence	Long Test Sequence	D/ND[1]
Battery Feed Test (#35)	X	X	ND
Station Present Test (#48)	X	X	ND
NPE Crosstalk Test (#6)		X	ND
Loop Around and Conference Test (#47)		X	ND

Continued on next page

Table 3-15. System Technician-Demanded Tests: ANL-LINE — *Continued*

Order of Investigation	Short Test Sequence	Long Test Sequence	D/ND[1]
Station Status and Translation Audits and Updates Test (#36)	X	X	ND

1. D = Destructive, ND = Non-destructive

NPE Crosstalk Test (#6)

One or more NPEs reside on each circuit pack with a TDM Bus interface. The NPE controls port connectivity and gain, and provides conferencing functions on a per-port basis. The NPE Crosstalk Test verifies that this port's NPE channel talks on the selected time slot and never crosses over to time slots reserved for other connections. If the NPE is not working correctly, one-way and noisy connections may be observed. This test is usually only part of a port's Long Test Sequence and takes about 20 to 30 seconds to complete.

Table 3-16. TEST #6 NPE Crosstalk Test

Error Code	Test Result	Description/ Recommendation
1000	ABORT	System resources required to run this test are not available. The port may be busy with a valid call. Use the **display port PCSSpp** command to determine the station extension. Use the **status station** command to determine the service state of the port. If the service state indicates that the port is in use, then the port is unavailable for certain tests. (Refer to the "Status Commands" section in Chapter 8, "Maintenance Commands and Trouble-Clearing Aids", for a full description of all possible states.) You must wait until the port is idle before retesting. 1. If the port status is idle, then retry the command at 1-minute intervals a maximum of 5 times.
1001	ABORT	Could not allocate the necessary system resources to run this test. 1. Retry the command at 1-minute intervals a maximum of 5 times.

Continued on next page

Table 3-16. TEST #6 NPE Crosstalk Test — *Continued*

Error Code	Test Result	Description/ Recommendation
1002	ABORT	The system could not allocate time slots for the test. The system may be under heavy traffic conditions or it may have time slots out-of-service due to TDM-BUS errors. Refer to "TDM-BUS (TDM Bus)" Maintenance documentation to diagnose any active TDM-BUS errors. 1. If system has no TDM-BUS errors and is not handling heavy traffic, repeat test at 1-minute intervals a maximum of 5 times.
1003	ABORT	The system could not allocate a tone receiver for the test. The system may be oversized for the number of Tone Detectors present or some Tone Detectors may be out-of-service. 1. Look for TTR-LEV errors in the Error Log. If present, refer to "TTR-LEV (TTR Level)" Maintenance documentation. 2. Look for TONE-PT errors in the Error Log. If present, refer to "TONE-PT (Tone Generator)" Maintenance documentation. 3. If neither condition exists, retry the test at 1-minute intervals a maximum of 5 times.
1004	ABORT	System resources required to run this test are not available. The port may be busy with a valid call. Use the **display port PCSSpp** command to determine the station extension. Use the **status station** command to determine the service state of the port. If the service state indicates that the port is in use, then the port is unavailable for certain tests. (Refer to the "Status Commands" section in Chapter 8, "Maintenance Commands and Trouble-Clearing Aids", for a full description of all possible states.) You must wait until the port is idle before retesting. 1. Retry the command at 1-minute intervals a maximum of 5 times.
1005	ABORT	The test was aborted due to a configuration problem. This code will result under either of the following conditions: 1. This test may not be applicable, or it may be disruptive to terminal equipment other than a voice terminal (for example, the modem pool member or music on hold). 2. The circuit pack is one of the following: — TN742 vintages 13, 14 and 15 — TN769 vintages 3, 4 and 5
1018	ABORT	Test disabled via administration. The default for the 'Test' field on the 'Station' form is 'y'; thus, you may want to determine why this field has been set to 'n' on this station (this may be due to the ringing application test 48, which can be customer or terminal disturbing). 1. To enable the test for a particular station, enter **change station extension** and set the ‘Test?’ field on the ‘Station Form’ to ‘y.’

Continued on next page

Table 3-16. TEST #6 NPE Crosstalk Test — *Continued*

Error Code	Test Result	Description/ Recommendation
1020	ABORT	The test did not run due to a previously existing error on the specific port or a more general circuit pack error. 1. Examine Error Log for existing errors against this port or the circuit pack and attempt to diagnose the previously existing error.
2000	ABORT	Response to the test request was not received within the allowable time period.
2100	ABORT	System resources required to run this test are not available. Either a system allocation to get information about the port or to put the port into a service state failed or the attempt to put the port in connection with a tone source failed (this could be a tone-clock problem). The tone-clock and tone detectors could be having a communication problem, for example, the companding modes could be out of synchronization. 1. Retry the command at 1-minute intervals a maximum of 5 times.
Any	FAIL	This test can fail due to on-board or off-board problems. Off-board problems of concern include EXP-INTF faults, TDM-BUS faults, and faults associated with the tone detectors/tone generators. Clear all off-board problems before replacing the board. Keep in mind that a TDM-BUS problem is usually the result of a faulty board connected to the backplane or bent pins on the backplane. 1. Look for EXP-INTF errors in the error log. If present, refer to the EXP-INTF Maintenance documentation. 2. Look for TDM-BUS errors in the error log. If present, refer to the TDM-BUS Maintenance documentation. 3. Look for TONE-BD and/or TONE-PT errors in the error log. If present, refer to the TONE-BD Maintenance documentation and the TONE-PT Maintenance documentation. 4. Test the board when the faults from steps 1, 2, and 3 are cleared. Replace the board only if the test fails.
	PASS	The port is correctly using its allocated time slots. User-reported troubles on this port should be investigated by using other port tests, by examining station wiring, by examining the station, and by ensuring that the terminal is correctly translated as off-premises or on-premises. **NOTE:** This test always passes for Analog circuit packs TN742 prior to Vintage 4.

Continued on next page

Table 3-16. TEST #6 NPE Crosstalk Test — *Continued*

Error Code	Test Result	Description/ Recommendation
0	NO BOARD	The test could not relate the internal ID to the port (no board). This could be due to incorrect translations, no board is inserted, an incorrect board is inserted, or an insane board is inserted. 1. Check to ensure that the board translations are correct. Use the **list config** command and resolve any problems. 2. If the board was found to be correctly inserted in step 1, issue the **busyout board** command. 3. Issue the **reset board** command. 4. Issue the **release busy board** command. 5. Issue the **test board long** command. This should re-establish the linkage between the internal ID and the port. If this is not the case, dispatch to check to ensure that there is a valid board inserted.

Battery Feed Test (also called Port Diagnostic Test) (#35)

The battery feed chip provides power to the telephone equipment, signaling, rotary dial pulsing, transmission, and balance. This test checks the signaling and switchhook capabilities of the battery feed chip by terminating the port, applying battery, and trying to detect a current.

Table 3-17. TEST #35 Battery Feed Test

Error Code	Test Result	Description/ Recommendation
	ABORT	Could not allocate the necessary system resources to run this test. 1. Retry the command at 1-minute intervals a maximum of 5 times.

Continued on next page

Table 3-17. TEST #35 Battery Feed Test — *Continued*

Error Code	Test Result	Description/ Recommendation
1000	ABORT	System resources required to run this test are not available. The port may be busy with a valid call. Use the **display port PCSSpp** command to determine the station extension. Use the **status station** command to determine the service state of the port. If the service state indicates that the port is in use, then the port is unavailable for certain tests. (Refer to the "Status Commands" section in Chapter 8, "Maintenance Commands and Trouble-Clearing Aids", for a full description of all possible states.) You must wait until the port is idle before retesting. 1. If the port status is idle, then retry the command at 1-minute intervals a maximum of 5 times.
1004	ABORT	System resources required to run this test are not available. The port may be busy with a valid call. Use the **display port PCSSpp** command to determine the station extension. Use the **status station** command to determine the service state of the port. If the service state indicates that the port is in use, then the port is unavailable for certain tests. (Refer to the "Status Commands" section in Chapter 8, "Maintenance Commands and Trouble-Clearing Aids", for a full description of all possible states.) You must wait until the port is idle before retesting. 1. Retry the command at 1-minute intervals a maximum of 5 times.
1005	ABORT	The test was aborted due to a configuration problem. This code will result under either of the following conditions: 1. This test may not be applicable, or it may be disruptive to terminal equipment other than a voice terminal (for example, the modem pool member or music on hold). 2. The circuit pack is one of the following: — TN742 vintages 13, 14 and 15 — TN769 vintages 3, 4 and 5
1018	ABORT	Test disabled via administration. The default for the 'Test' field on the 'Station' form is 'y'; thus, you may want to determine why this field has been set to 'n' on this station (this may be due to the ringing application test 48, which can be customer or terminal disturbing). 1. To enable the test for a particular station, enter **change station extension** and set the ‘Test?’ field on the ‘Station Form’ to ‘y.’

Continued on next page

Table 3-17. TEST #35 Battery Feed Test — *Continued*

Error Code	Test Result	Description/ Recommendation
2000	ABORT	Response to the test request was not received within the allowable time period.
2100	ABORT	System resources required to run this test are not available. Either a system allocation to get information about the port or to put the port into a service state failed or the attempt to put the port in connection with a tone source failed (this could be a tone-clock problem). The tone-clock and tone detectors could be having a communication problem, for example, the companding modes could be out of synchronization. 1. Retry the command at 1-minute intervals a maximum of 5 times.
	FAIL	The port's battery feed chip is unable to supply sufficient power to the terminal equipment. This may occur when the test is performed at the same time that the terminal equipment goes off-hook. 1. Use **status station** to determine when the port is available for testing. When the port becomes available for testing, retry the command at 1-minute intervals a minimum of 5 times. 2. If the test continues to fail, determine whether the customer is experiencing problems on this line. Replace the circuit pack only if the customer is experiencing problems.
	PASS	The port's battery feed chip is able to provide power to the station equipment to detect on-/off-hook. However, the battery feed chip may still be unable to provide power for touch-tones. If tones are heard when buttons are pressed, then the battery feed chip is functioning correctly; otherwise, replace the circuit pack because this port is defective. User-reported troubles on this port should be investigated by using other port tests, by examining station wiring, by examining the station, and by ensuring that the terminal is correctly translated as off-premises or on-premises. **NOTE:** This test always passes for TN742 Analog circuit packs prior to Vintage 6.

Continued on next page

Table 3-17. TEST #35 Battery Feed Test — *Continued*

Error Code	Test Result	Description/ Recommendation
0	NO BOARD	The test could not relate the internal ID to the port (no board). This could be due to incorrect translations, no board is inserted, an incorrect board is inserted, or an insane board is inserted. 1. Check to ensure that the board translations are correct. Use the **list config** command, and resolve any problems that are found. 2. If the board was found to be correctly inserted in step 1, issue the **busyout board** command. 3. Issue the **reset board** command. 4. Issue the **release busy board** command. 5. Issue the **test board long** command. This should re-establish the linkage between the internal ID and the port. If this is not the case, dispatch to check to ensure that there is a valid board inserted.

Station Status and Translation Audits and Updates Test (#36)

This test updates the analog port's message lamp state (if it has one) and translations (such as station type, dial type, network connection) with information kept in the software. The software is updated with the switchhook state reported by the port processor. When the ringer is in the off state, this test also turns off the station's ringer to prevent constant ringing caused by defective hardware.

Table 3-18. TEST #36 Station Status and Translation Audits and Updates Test

Error Code	Test Result	Description/ Recommendation
	ABORT	Could not allocate the necessary system resources to run this test.
1004	ABORT	System resources required to run this test are not available. The port may be busy with a valid call. Use the **display port PCSSpp** command to determine the station extension. Use the **status station** command to determine the service state of the port. If the service state indicates that the port is in use, then the port is unavailable for certain tests. (Refer to the "Status Commands" section in Chapter 8, "Maintenance Commands and Trouble-Clearing Aids", for a full description of all possible states.) You must wait until the port is idle before retesting. 1. Retry the command at 1-minute intervals a maximum of 5 times.
1005	ABORT	The test was aborted due to a configuration problem. This code will result under either of the following conditions: 1. This test may not be applicable, or it may be disruptive to terminal equipment other than a voice terminal (for example, the modem pool member or music on hold). 2. The circuit pack is one of the following: — TN742 vintages 13, 14 and 15 — TN769 vintages 3, 4 and 5
1006	ABORT	This port has been busied out by command or taken out-of-service by the failure of the NPE Crosstalk Test. 1. Look in the Error Log for Error Type 18 (port busied out) for this port. If this error is present, then release the port with the **release station extension** command and run the test again. 2. Look in the Error Log for Error Type 1025 (NPE Crosstalk Test failed) for this port. If this error is present, then investigate the errors associated with the NPE Crosstalk Test (#6) first. 3. Make sure that the terminal is connected and in service, and then retest.
	ABORT	Could not allocate the necessary system resources to run this test.
2000	ABORT	Response to the test request was not received within the allowable time period.
2100	ABORT	Could not allocate the necessary system resources to run this test. 1. Retry the command at 1-minute intervals a maximum of 5 times.

Continued on next page

Table 3-18. TEST #36 Station Status and Translation Audits and Updates Test — *Continued*

Error Code	Test Result	Description/ Recommendation
1	FAIL	This does not indicate a hardware problem. The switchhook audit failed, and the other updates were not performed because of this failure. This condition may occur when the audit is performed at the same time that the terminal equipment goes off-hook. Use the **status station** command to determine when the port is available for testing. 1. When the port becomes available for testing, retry the command at 1-minute intervals a maximum of 5 times.
5	FAIL	This does not indicate a hardware problem but may indicate an internal software error. The message waiting lamp update failed. The translation and ringer updates were not performed because of this failure.
7	FAIL	The translation update failed. The ringer update was not performed because of this failure. This does not indicate a hardware problem but may be an internal software error.
8	FAIL	This does not indicate a hardware problem but may be an internal software error. The ringer update failed. 1. Retry the command at 1-minute intervals a maximum of 5 times.
	PASS	The software and the port processor have the same status. User-reported troubles on this port should be investigated by using other port tests, by examining station wiring, by examining the station, and by ensuring that the terminal is correctly translated as off-premises or on-premises. **NOTE:** This test always passes for TN742 Analog circuit packs prior to Vintage 6.
0	NO BOARD	The test could not relate the internal ID to the port (no board). This could be due to incorrect translations, no board is inserted, an incorrect board is inserted, or an insane board is inserted. 1. Check to ensure that the board translations are correct. Use the **list config** command, and resolve any problems that are found. 2. If the board was found to be correctly inserted in step 1, issue the **busyout board** command. 3. Issue the **reset board** command. 4. Issue the **release busy board** command. 5. Issue the **test board long** command. This should re-establish the linkage between the internal ID and the port. If this is not the case, dispatch to check to ensure that there is a valid board inserted.

Loop Around and Conference Test (#47)

Each Analog Port consists of:

- an NPE for port connectivity and gain, and conferencing functionality
- a code that converts the digital signals of the TDM Bus to analog signals
- a battery feed chip that provides power to the telephone set for signaling, dial pulsing, transmission, and balance

This test is designed to check the on-board transmission capabilities of the NPE, the code, and the battery feed chip of the Analog Port. A Tone Detector and a Tone Generator talk and listen on the same pair of time slots as the Analog Port. The Analog Port is then instructed to go into loop around mode (see Figure 10-2). The test passes if the signal measured by the Tone Detector is within acceptable limits.

The Conference Circuit Test verifies that the NPE channel for the port being tested can correctly perform the conferencing function. As part of Test #47, the operation of the port conference circuits in the NPE for three and four parties is also tested. In addition, a test is run to measure noise. The NPE is instructed to listen to several different tones and conference the tones together. The resulting signal is then measured by a Tone Detector port. If the level of the tone is within a certain range, the test passes.

The noise test is performed by filtering out the tone and then measuring inherent port noise.

NOTE:
This Loop Around Test is sensitive to the length of the loop, the equipment in the loop, or the equipment terminating the loop, such as off-premises stations. If this test is causing a false alarm, then disable the test by changing the Tests field to "no" using the **change station** command for this station.

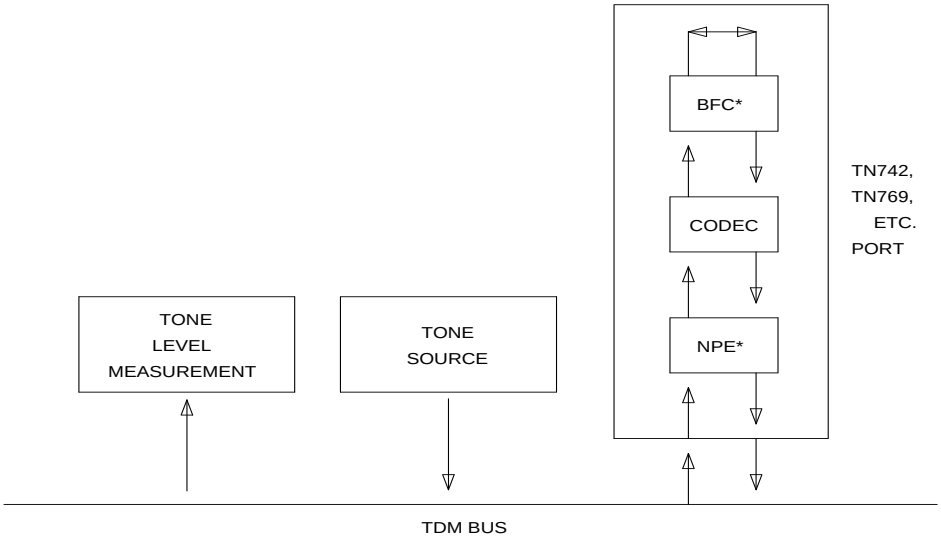

* BFC - BATTERY FEED AND HYBRID CHIP
NPE - NETWORK PROCESSING ELEMENT

Figure 3-1. Analog Loop Around and Conference Test

Table 3-19. TEST #47 Loop Around and Conference Test

Error Code	Test Result	Description/ Recommendation
	ABORT	Could not allocate the necessary system resources to run this test. 1. Retry the command at 1-minute intervals a maximum of 5 times.
7	ABORT	The port was seized by a user for a valid call. 1. Enter **display port PCSSpp** to determine the station's extension. Enter **status station extension** to determine the service state of the port. If the port is in use, it will be unavailable for certain tests. Wait until the port is idle before retesting. 2. If the port is idle, retry the command at 1-minute intervals up to 5 times.

Continued on next page

Table 3-19. TEST #47 Loop Around and Conference Test — *Continued*

Error Code	Test Result	Description/ Recommendation
1000	ABORT	System resources required to run this test were not available. The port may be busy with a valid call. (This could be a Music-on-Hold port.) 1. Enter **display port PCSSpp** to determine the station's extension. Enter **status station extension** to determine the service state of the port. If the port is in use, it will be unavailable for certain tests. Wait until the port is idle before retesting. 2. If the port is idle, retry the command at 1-minute intervals up to 5 times.
1002	ABORT	The system could not allocate time slots for the test. The system may be under heavy traffic conditions or it may have time slots out-of-service due to TDM-BUS errors. Refer to "TDM-BUS (TDM Bus)" Maintenance documentation to diagnose any active TDM-BUS errors. 1. If system has no TDM-BUS errors and is not handling heavy traffic, repeat test at 1-minute intervals a maximum of 5 times.
1003	ABORT	The system could not allocate a tone receiver for the test. The system may be oversized for the number of Tone Detectors present or some Tone Detectors may be out-of-service. 1. Look for TTR-LEV errors in the Error Log. If present, refer to "TTR-LEV (TTR Level)" Maintenance documentation. 2. Look for TONE-PT errors in the Error Log. If present, refer to "TONE-PT (Tone Generator)" Maintenance documentation. 3. If neither condition exists, retry the test at 1-minute intervals a maximum of 5 times.
1004	ABORT	The port has been seized for a valid call during the conference or noise test. Use the **status station** command to determine when the port is available for testing. 1. If the circuit pack is a TN742 with vintage 10 or less, this test is not valid. Otherwise, proceed with #2. 2. When the port is available for testing, retry the command at 1-minute intervals a maximum of 5 times.
1005	ABORT	The test was aborted due to a configuration problem. This code will result under either of the following conditions: 1. This test may not be applicable, or it may be disruptive to terminal equipment other than a voice terminal (for example, the modem pool member or music on hold). 2. The circuit pack is one of the following: — TN742 vintages 13, 14 and 15 — TN769 vintages 3, 4 and 5

Continued on next page

Table 3-19. TEST #47 Loop Around and Conference Test — *Continued*

Error Code	Test Result	Description/ Recommendation
1018	ABORT	Test disabled via administration. The default for the 'Test' field on the 'Station' form is 'y'; thus, you may want to determine why this field has been set to 'n' on this station (this may be due to the ringing application test 48, which can be customer or terminal disturbing). 1. To enable the test for a particular station, enter **change station** extension and set the 'Test?' field on the 'Station Form' to 'y.'
2000	ABORT	Response to the test request was not received within the allowable time period.
2100	ABORT	System resources required to run this test are not available. Either a system allocation to get information about the port or to put the port into a service state failed or the attempt to put the port in connection with a tone source failed (this could be a tone-clock problem). The tone-clock and tone detectors could be having a communication problem, for example, the companding modes could be out of synchronization. 1. Retry the command at 1-minute intervals a maximum of 5 times.
7	FAIL	The conference test or the noise test failed. This could cause noisy or unreliable connections, or users calling this port may hear an echo. The problem can also be off-board, as described below.
13		The reflective loop around with gain set to low and the 600-ohm balance failed. This will cause noisy or unreliable connections.
14		The reflective loop around test (with the gain set to high, using RC balance) failed. This could cause noisy or unreliable connections. The problem can also be off-board, as described below.
15		The nonreflective loop around test failed. This could cause noisy or unreliable connections, or users calling this port may hear an echo. The problem can also be off-board, as described below. *More information follows.*

Continued on next page

Table 3-19. TEST #47 Loop Around and Conference Test — *Continued*

Error Code	Test Result	Description/ Recommendation
7 13 14 15 *(cont'd.)*	FAIL *(cont'd.)*	1. Disconnect the terminal equipment from the circuit pack at the cross-connect and run the test again. 2. If the test fails again, replace the circuit pack and reconnect the terminal equipment. If the test passes the second time, then the test results were affected by the terminal equipment connected to the port; in this case, ignore the results of this test if all other tests pass or abort and the station is operating properly. Failure of test 47 does not cause an alarm. If there are failures of other tests, then investigate those errors. User reported troubles with this port should be investigated by using other port tests, by examining station wiring, and by examining the station to ensure that it is correctly translated as off-premises or on-premises. **NOTE:** If the loop around and conference circuit test fails for all ports on a circuit pack, a -5 volt power problem is indicated.
	PASS	The port is able to provide an analog transmission path to the station equipment. User-reported troubles on this port should be investigated by using other port tests, by examining station wiring, by examining the station, and by ensuring that the terminal is correctly translated as off-premises or on-premises. **NOTE:** This test always passes for TN742 Analog circuit packs prior to Vintage 6.
0	NO BOARD	The test could not relate the internal ID to the port (no board). This could be due to incorrect translations, no board is inserted, an incorrect board is inserted, or an insane board is inserted. 1. Check to ensure that the board translations are correct. Use the **list config** command, and resolve any problems that are found. 2. If the board was found to be correctly inserted in step 1, issue the **busyout board** command. 3. Issue the **reset board** command. 4. Issue the **release busy board** command. 5. Issue the **test board long** command. This should re-establish the linkage between the internal ID and the port. If this is not the case, dispatch to check to ensure that there is a valid board inserted.

Station Present Test (also called Ringing Application Test) (#48)

This test provides a burst of ringing current to the terminal equipment and detects that current flows. This test is to ascertain whether or not terminal equipment is connected to the port.

This test may cause some terminal equipment to ring briefly during daily maintenance. If this ringing is disturbing the customer or the terminal equipment, it should be disabled using the Tests field of the station administration screen. However, on some releases of the software, this action disables Tests #6, #47, and #35 as well as Test #48.

Table 3-20. TEST #48 Station Present Test

Error Code	Test Result	Description/ Recommendation
	ABORT	Could not allocate the necessary system resources to run this test. 1. Retry the command at 1-minute intervals a maximum of 5 times.
1000	ABORT	System resources required to run this test were not available. The port may be busy with a valid call. Use the **display port PCSSpp** to determine the station's extension. Enter **status station** extension to determine the service state of the port. If the port is in use, it will be unavailable for certain tests. Wait until the port is idle before retesting. 1. If the port is idle, retry the command at 1-minute intervals up to 5 times. 2. Check for phone left off-hook or for wiring problems.
1004	ABORT	System resources required to run this test are not available. The port may be busy with a valid call. Use the **display port PCSSpp** command to determine the station extension. Use the **status station** command to determine the service state of the port. If the service state indicates that the port is in use, then the port is unavailable for certain tests. (Refer to the "Status Commands" section in Chapter 8, "Maintenance Commands and Trouble-Clearing Aids", for a full description of all possible states.) You must wait until the port is idle before retesting. 1. Retry the command at 1-minute intervals a maximum of 5 times.

Continued on next page

Table 3-20. TEST #48 Station Present Test — *Continued*

Error Code	Test Result	Description/ Recommendation
1005	ABORT	The test was aborted due to a configuration problem. This code will result under either of the following conditions: 1. This test may not be applicable, or it may be disruptive to terminal equipment other than a voice terminal (for example, the modem pool member or music on hold). 2. The circuit pack is one of the following: — TN742 vintages 13, 14 and 15 — TN769 vintages 3, 4 and 5
1008	ABORT	Could not allocate a ringing circuit for one of the following reasons: ■ All the ringing circuits are in use, or ■ The ringing generator is defective, or ■ It is not wired correctly. 1. Retry the command at 1-minute intervals a maximum of 5 times. 2. If the test continues to abort, look for RING-GEN errors in the Error Log. If an ABORT 1008 occurs for Test #48 on other circuit packs as well, then the ring generator may be defective. If it does not occur on other ports, then that circuit pack is currently using all 4 ringing phases.
1018	ABORT	The test was disabled via administration. The default for the 'Test' field on the 'Station' form is 'y'; thus, you may want to determine why this field has been set to 'n' on this station (this may be due to the ringing application test 48, which can be customer or terminal disturbing). 1. To enable the test for a particular station, enter **change station *<extension>*** and set the `Test?` field on the station form to **y**.
2000	ABORT	Response to the test request was not received within the allowable time period.
2100	ABORT	System resources required to run this test are not available. Either a system allocation to get information about the port or to put the port into a service state failed or the attempt to put the port in connection with a tone source failed (this could be a tone-clock problem). The tone-clock and tone detectors could be having a communication problem, for example, the companding modes could be out of synchronization. 1. Retry the command at 1-minute intervals a maximum of 5 times.

Continued on next page

Table 3-20. TEST #48 Station Present Test — *Continued*

Error Code	Test Result	Description/ Recommendation
	FAIL	The terminal equipment is not connected to the circuit pack or the ringing generator may have failed. 1. Remotely test the equipment. 2. If the test fails again, look for RING-GEN errors in the error log. If present, refer to the RING-GEN (analog ring generator) Maintenance documentation. 3. Check all of the wiring between the station equipment and the switch. Then, run the test again. 4. If the test still fails, the set may be defective. Check the set, and replace it, if necessary. 5. Some terminal equipment (such as a modem) could fail even when it is connected properly. If this is the case, disable the test using the **change station extension** command (enter 'n' into the 'Test' field). Note that this action also disables tests 6, 7, 161, and 35 on this port.
	PASS	The station is connected properly to the switch. This test may also pass if no terminal equipment is connected and the terminal is located far from the switch (that is, it is off-premises). User-reported troubles on this port should be investigated by using other port tests, by examining station wiring, by examining the station, and by ensuring that the terminal is correctly translated as off-premises or on-premises. **NOTE:** This test always passes for TN742 Analog circuit packs prior to Vintage 6.
0	NO BOARD	The test could not relate the internal ID to the port (no board). This could be due to incorrect translations, no board is inserted, an incorrect board is inserted, or an insane board is inserted. 1. Check to ensure that the board translations are correct. Use the **list config** command, and resolve any problems that are found. 2. If the board was found to be correctly inserted in step 1, issue the **busyout board** command. 3. Issue the **reset board** command. 4. Issue the **release busy board** command. 5. Issue the **test board long** command. This should re-establish the linkage between the internal ID and the port. If this is not the case, dispatch to check to ensure that there is a valid board inserted.

ANN-BD (Announcement Circuit Pack)

MO Name (in Alarm Log)	Alarm Level	Initial Command to Run[1]	Full Name of MO
ANN-BD	MINOR	test board PCSS l	Announcement Circuit Pack
ANN-BD	WRN	test board PCSS l	Announcement Circuit Pack

1. Where P is the port network number (1 for PPN); C is the carrier designation (for example, A, B,or C); and SS is the address of the slot in the carrier where the circuit pack is located (for example, 01, 02, ..., etc.).

The TN750 Announcement circuit pack is a service circuit which provides an integrated means for recording announcements that can be played back on demand by call processing as part of a calling feature (for example, announcements on hunt group calls). There are 16 Announcement Ports on the Announcement circuit pack. Each port can play any integrated announcement, independently of the other ports. In addition to the 16 Announcement Ports, the Announcement circuit pack also has one Data Line Circuit Port (port 17). The Data Line Circuit Port is used for uploading/downloading the announcement memory to/from the memory card. If there are any errors associated with port 17, refer to "DAT-LINE (Data Line)" Maintenance documentation. If there are any errors associated with any other port, refer to "ANN-PT (Announcement Port)" Maintenance documentation.

NOTE:
TN750C is required if your system has multiple announcement boards (up to ten are allowed). Only one TN750A/B may be present in the system when a TN750C is used. The announcements from a TN750A/B can be saved and restored to a TN750C — but once the announcements are recorded onto a TN750C, they are not backward compatible with the TN750A/B.

The Announcement circuit pack has two processors on it. The first processor, or Angel, controls the circuit pack and communicates with the switch via the control channel on the TDM Bus. The second processor, or Speech Processor (SP), controls the speech memory and announcements. Digital speech is converted from its TDM Bus form to an internal storage form (for recording) and vice versa (for playbacks) by the 140AY device on the circuit pack, which has 16 channels (one for each Announcement Port).

General Notes

Here are a few **very important** general notes that apply to any problem on the Announcement circuit pack. The user should read this before attempting to work on the TN750 Announcement circuit pack or Announcement Ports, **especially if the circuit pack needs to be replaced.**

1. The TN750 Announcement circuit pack retains all integrated announcements *as long as the circuit pack has power*. For this reason, whenever there is a problem with either the Announcement circuit pack or an Announcement Port that may require the circuit pack to be reset, it is always best to try to reset the circuit pack via the **reset board PCSS** command first. If that does not work, replace the circuit pack. **Announcements are preserved through a software reset, but they are lost when the circuit pack is reseated.**

2. **If a customer has announcements on the Announcement circuit pack, then announcements must be saved on the memory card to ensure that they are not lost.** This should be done as soon as the announcements are recorded on the circuit pack (or whenever they are changed), assuming that the circuit pack is in proper working order (see Note).

   NOTE:
   Unlike translations, announcements are NEVER automatically saved to the memory card.

3. The **save announcements** command replaces the announcement file on the memory card. Care must be taken not to mistakenly enter this command and, as a result, destroy a valid file on the memory card.

4. The **restore announcements** command replaces the Announcement circuit pack speech memory with the announcement file on the memory card. Care must be taken not to mistakenly enter this command, destroying valid speech memory, especially if the memory card does not have a valid announcement file on it.

5. Whenever the Announcement circuit pack is replaced, announcements must always be rerecorded or downloaded to the new circuit pack. Otherwise, call processing is not able to use the pack.

6. If announcement speech memory is corrupted, announcements should not be saved [that is, if the Announcement Checksum Test (#209) fails, or if the speech sounds corrupted on playback]. This can ruin a good announcement file on the memory card and potentially cause errors/alarms on any circuit pack to which the new file is downloaded. However, if the customer does not have a valid announcement file on the memory card, announcements can be saved in an effort to try to retain some of them (all of the announcements recorded may not be corrupted).

7. Due to a hardware fault in the TN750 announcement board, the following sequence of events my cause the announcement file to become corrupted and unusable:

   - Fill the board with recorded announcements.
   - Delete the last few announcements recorded.
   - Re-record the announcements deleted.

   If the announcement file becomes corrupted, the only solution is to re-record all announcements. To do this, follow these steps:

   a. Remove the announcement board.
   b. Remove the tape cartridge from the tape drive. Do this so that announcements are not automatically restored from tape.
   c. Re-insert the announcement board.
   d. Re-record all announcements.
   e. Insert the tape cartridge in the tape drive.
   f. Issue the save announcements command to save all the announcements on the tape.

   This hardware fault is fixed in the TN750B announcement board. However, the TN750B board will not automatically correct an announcement file which has previously been corrupted by a TN750 board. The only way to correct an announcement file corrupted by the TN750 board is to follow the steps above.

Announcement Administration

A brief description of the integrated announcement administration is given here to aid in troubleshooting the Announcement circuit pack and its ports. In many cases, it is necessary to record, play back, and/or delete announcements to resolve an alarm. It may also be necessary to save and restore announcements as part of the maintenance procedures. For a complete description of integrated announcement administration, please refer to *DEFINITY Enterprise Communications Server Release 6 Administration and Feature Description*, 555-230-522.

Announcement Session

Announcements can be recorded, played back, and deleted from an announcement session. A station's COS needs to include console permissions in order for that station to be able to enter an announcement session. To enter an announcement session, go off-hook on a station that has console permissions and enter the appropriate Feature Access Code (FAC), administered as Announcement access code on the FACs form. Dial tone should be returned at this point. Enter the extension of the announcement that needs to be recorded, deleted, or played back. Again, dial tone should be heard. To record an

announcement, press station keypad digit 1, record after the tone, and hang up when done. To play back an announcement, press 2. To delete an announcement, press 3 (confirmation tone is given if the delete worked). Announcements can also be played back by simply calling the announcement extension associated with them.

Uploading/Downloading Announcements

Integrated announcements on the TN750 Announcement circuit pack can be uploaded to the memory card with the administration terminal **save announcements** command. Likewise, integrated announcements can be downloaded to the Announcement circuit pack with the **restore announcements** command. Both of these commands require a free data module of NETCON type to be administered, a data module of announcement type (on the Announcement circuit pack) to be administered, and a memory card. These commands are useful in maintaining the customer's recorded announcements. Depending on system traffic, announcement uploads and/or downloads take between 30 and 45 minutes.

The system **automatically** tries to download the Announcement circuit pack five minutes after it is inserted. This automatic download procedure is aborted if:

1. An announcement is recorded within 10 minutes of circuit pack insertion.
2. An announcement download is invoked sooner with the administration terminal **restore announcements** command.
3. No announcement and/or NETCON data module is administered.
4. Either the announcement data module is busy or all the administered NETCON data modules are busy.
5. No memory card is in the system.
6. The memory card in the system does not have a valid announcement file saved on it.

Hardware Error Log Entries and Test to Clear Values

Table 3-21. Announcement Circuit Pack Error Log Entries

Error Type	Aux Data	Associated Test	Alarm Level (See WARNING message below)	On/Off Board	Test to Clear Value
0[1]	0	Any	Any	Any	test board PCSS sh r 1
1 (a)	0	Circuit pack removed or SAKI Test (#53)	MINOR	ON	
2 (p)		None			
14 (b)	1 to 64	Announcement Checksum Test (#209)			
18	0	busyout board PCSS	WARNING	OFF	release board PCSS
23 (c)	0	None	WARNING	OFF	
125 (d)		None	MINOR	ON	
170 (e)	0	None	MINOR	ON	
217 (f)	0	None	WARNING	OFF	
257	65535	Control Channel Test (#52)	MINOR	ON	test board PCSS l r 20
257 (g)	Any	None			
267 (f)	0	None	WARNING	OFF	
513 (h)	Any	None			
1025 (i)	4363	NPE Audit Test (#50)			test board PCSS l
1281 (j)	17699	None			
1538 (k)	Any	None	MINOR	ON	
1793		Angel-SP Handshake Test (#208)	MINOR	ON	test board PCSS l r 3
	17680	In-line Error			
2049 (l) (m)		Clock Match Inquiry Test (#212)	MINOR	ON	test board PCSS sh r 3
	17674	In-line Error			

Continued on next page

Table 3-21. Announcement Circuit Pack Error Log Entries — *Continued*

Error Type	Aux Data	Associated Test	Alarm Level (See WARNING message below)	On/Off Board	Test to Clear Value
2305		140AY Loop Around Test (#210)	MINOR	ON	test board PCSS sh r 3
2561		Super Frame Match Inquiry Test (#211)	MINOR	ON	test board PCSS sh r 3
	17676	In-line Error			
2817 (l)		Announcement Checksum Test (#209)	MINOR	ON	test board PCSS sh r 3
	17682	In-line Error			
	17699 (m)	In-line Error			
3840 (n)	Any	None			
3999 (o)	Any	None			

1. Run the Short Test Sequence first. If all tests pass, run the Long Test Sequence. Refer to the appropriate test description and follow the recommended procedures.

WARNING:
All alarms are upgraded to MAJOR when the BASE Tone Generator is set to 12 (France).

Notes:

a. Error Type 1— This error indicates the circuit pack totally stopped functioning or it was physically removed from the system.

NOTE:
The alarm is logged about 11 minutes after the circuit pack has been removed and/or SAKI Test (#53) fails.

If the circuit pack is not in the system, insert a circuit pack (in the same slot as the error indicates) to resolve this error. Or, if the circuit pack is in the system and the red LED is on, follow the instructions for "Red (alarm)" in the "Control and Port Circuit Pack Status LEDs" section in Chapter 7, "LED Interpretation".

NOTE:
The alarm is logged about 11 minutes after the circuit pack has been removed and/or SAKI Test (#53) fails.

WARNING:
Reseating and/or replacing the circuit pack results in loss of integrated announcements (TN750/B only). See "General Notes" near the beginning of this Maintenance procedure.

b. Error Type 14— Whenever the Announcement Checksum Test (#209) fails, this error is logged. The Aux Data indicates the number of the first defective announcement found. This number corresponds to the announcement numbers on the announcement form. The extension relating to the announcement can be determined by the **display announcement** command. This error only appears in the Error Log in conjunction with Error Type 2817. Follow the procedures for Error Type 2817 to troubleshoot Error Type 14.

c. Error Type 23—The circuit pack has been logically administered but not physically installed. The alarm is cleared when the circuit pack is installed.

d. Error Type 125—A wrong circuit pack is inserted in the slot where this circuit pack is logically administered. To resolve this problem, either remove the wrong circuit pack and insert the logically administered circuit pack OR use the **change circuit-pack** command to readminister this slot to match the circuit pack inserted.

e. Error Type 217 and 267— Indicate that there is more than one TN750 Announcement circuit pack inserted in the system. Remove the alarmed circuit pack.

f. Error Type 257—This error indicates transient communication problems with this circuit pack. This error is not service-affecting and no action is required.

g. Error Type 513—This error, when reported with Aux Data in the range of 4352 to 4358, indicates the circuit pack has reported a hardware failure on the circuit pack. The circuit pack should be replaced.

WARNING:
Replacing the circuit pack results in loss of integrated announcements (TN750/B only). See "General Notes" near the beginning of this Maintenance procedure.

h. Error Type 1025—This error is not service-affecting and no action is required.

i. Error Type 1281—The SP found a fault in the speech main memory (SMM) (that is, it found one or more faulty memory locations). Whenever this error is logged, error 2817 is also logged [see Note (j)], which causes the

maintenance system to run the Announcement Checksum Test (#209) to determine if the bad memory location was being used by an announcement.

j. Error Type 1538—The hyperactive circuit pack is out-of-service and may exhibit one or more of the following symptoms:

   1. The tests run on the ports of this circuit pack are returning with a NO-BOARD.
   2. A busyout/release of the circuit pack has no effect on test results.
   3. A **list configuration** command shows that the circuit pack and ports are properly installed.

   The system tries to restore the circuit pack within 15 minutes. If the error recurs after 15 minutes, replace the circuit pack. (Refer to Chapter 5, "Routine Maintenance Procedures".)

k. Error Type 2049 and 2817—These errors are logged in conjunction with Error Type 1281, Aux Data 17699. Since that error [see Note (i)] means that a defective speech memory location was found, the announcement checksum error is also logged. This causes the Announcement Checksum Test (#209) to run, which determines if the defective memory location has corrupted any recorded announcements. If the Checksum Test passes, the faulty memory location is currently not being used, and the SP marks the location as faulty to ensure that future announcements do not attempt to use it.

   NOTE:
   As memory locations are marked faulty, the amount of available memory decreases, which decreases the total amount of announcement time available on the circuit pack.

l. Error Type 2049—A transient error that does not cause an alarm can occasionally occur during a SPE, TDM BUS, or Tone Clock interchange. It is possible for a marginal Tone-Clock circuit pack to cause this error against the ANN-BD without alarming the TONE-BD. If this error occurs again, replacing the Tone-Clock circuit pack may clear up this error. See the FAIL case in the Clock Match Inquiry Test (#212).

m. Error Type 3840— This error is not service-affecting and no action is required.

n. Error type 3999— Indicates that the circuit pack sent a large number of control channel messages to the switch within a short period of time. If error type 1538 is also present, then the circuit pack was taken out-of-service due to hyperactivity. If error type 1538 is not present, then the circuit pack has not been taken out-of-service, but it has generated 50% of the messages necessary to be considered hyperactive. This may be completely normal during heavy traffic periods. However, if this error type is logged when the circuit pack is being lightly used, it may indicate a problem with the circuit pack or the equipment attached to it.

o. Error Type 2—Check the Class of Restriction (COR) administered for the Data Line extension assigned to the TN750 for uploading and downloading announcements. The extension can be found by using **list data-module**.

System Technician-Demanded Tests: Descriptions and Error Codes

Always investigate tests in the order presented in Table 3-22 when inspecting errors in the system. By clearing error codes associated with the *Control Channel Loop Around Test*, for example, you may also clear errors generated from other tests in the testing sequence.

Table 3-22. System Technician-Demanded Tests: ANN-BD

Order of Investigation	Short Test Sequence	Long Test Sequence	Reset Board Sequence	D/ND[1]
Control Channel Loop Around Test (#52) (a)		X		ND
Angel-Speech Processor (SP) Handshake Test (#208)		X		ND
Clock Match Inquiry (#212)	X	X		ND
Super Frame Match Inquiry (#211)	X	X		ND
140AY Loop Around Test (#210)	X	X		ND
Announcement Checksum Test (#209)	X	X		ND
Network Processor Element (NPE) Audit Test (#50) (a)		X		ND
SAKI Test (#53) (a)			X	D

1. D = Destructive, ND = Non-destructive

Note:

a. For a complete description of these tests, refer to the "XXX-BD (Common Port Circuit Pack)" Maintenance documentation.

Angel-Speech Processor (SP) Handshake Test (#208)

This test checks the integrity of the communication link between the two processors on the Announcement circuit pack. Failure of this test indicates that the Speech Processor is insane and **results in the loss of all integrated announcements on the circuit pack.**

Table 3-23. TEST #208 Angel-Speech Processor (SP) Handshake Test

Error Code	Test Result	Description/ Recommendation
2000	ABORT	Response to the test request was not received within the allowable time period. If Error Type 1538 is present in the Error Log, follow the maintenance strategy recommended for this Error Type.
2100	ABORT	Could not allocate the necessary system resources to run this test.
	ABORT	Internal system error. 1. Retry the command at 1-minute intervals a maximum of 5 times.
	FAIL	Test failed. Circuit pack cannot be used. **Announcement speech memory is cleared when this test fails. Therefore, when the problem has been resolved, announcements must be rerecorded or downloaded to the circuit pack.** 1. Reset the circuit pack via the **reset board PCSS** command and then run this test again. If the test continues to fail, replace the circuit pack and then run this test again. 2. If there are recurring alarms on this circuit pack caused by this test failing, replace the circuit pack **even if Step 1 works**. **WARNING:** *Replacing the circuit pack results in loss of integrated announcements. See "General Notes" near the beginning of this Maintenance documentation.*
	PASS	The communications link between the two processors on the Announcement circuit pack is functioning properly. User-reported troubles on this circuit pack should be investigated using other circuit pack and port tests. Refer to "ANN-PT (Announcement Port)" Maintenance documentation for a description of the port tests.

Announcement Checksum Test (#209)

Associated with every recorded announcement is a checksum. In this test, the SP checks a stored global checksum covering all recorded announcements against a calculated one and returns the results to the maintenance system. If the global checksum failed, maintenance requests the SP to check each individual announcement's checksum.

If the test fails, then it returns the total number of defective announcements found. In addition, associated with each failure is an error in the Error Log (Error Type 14). The Aux Data indicates the number of the first defective announcement found. This number corresponds to the announcement numbers on the announcement form. The extension relating to the announcement can be determined by the **display announcement** command.

Table 3-24. TEST #209 Announcement Checksum Test

Error Code	Test Result	Description/ Recommendation
0	ABORT	An error code of 0 indicates that the announcement file has been corrupted due to a hardware fault in the TN750 board. Follow step #7 under "General Notes" at the beginning of this section.
1023	ABORT	There are no announcements currently recorded on the circuit pack.
1024	ABORT	This abort code is given for the following reasons: 1. An announcement upload or download is in progress. 2. An announcement upload or download is requested when this test is running. 3. A record is in progress. 4. A record request comes in when this test is running. If an announcement upload or download is in progress, a **status data-module <announcement data extension>** command should show that the announcement data port is connected to a NETCON data channel, and the "card-in-use" LED for the memory card is on (to determine the extension of the announcement data module, use the **list data-module** command). See Note (a) at end of table for more information. 1. Wait until the blocking event is finished, and then run this test again. An upload or download could take up to 45 minutes to complete, and a recording session is finished as soon as the station that was making the recording is placed on-hook. 2. If the test continues to abort, and a record or upload/download is not in progress, escalate the problem.

Continued on next page

Table 3-24. TEST #209 Announcement Checksum Test — *Continued*

Error Code	Test Result	Description/ Recommendation
2000	ABORT	Response to the test request was not received within the allowable time period. If Error Type 1538 is present in the Error Log, follow the maintenance strategy recommended for this Error Type.
2100	ABORT	Could not allocate the necessary system resources to run this test.
	ABORT	Internal system error. 1. Retry the command at 1-minute intervals a maximum of 5 times.
0-256	FAIL	Test failed. The error code indicates the total number of defective announcements that were found. When TEST #209 fails with error code 0, the Global Checksum failed on the board, but no individual Checksum failed. **NOTE:** Since the announcements are recorded digitally, it is possible for the Announcement Checksum Test to *fail* but still have all the announcements sound uncorrupted. When an individual announcement fails the Checksum Test, always listen to the announcement first before taking any action (an announcement can be played back by dialing the announcement extension associated with the announcement number). If the announcement sounds corrupted, then rerecord it or delete it. 1. Look in the Error Log to determine the number of the first defective announcement. Play back the announcement. If the announcement sounds defective, rerecord it or delete it. If the error code was greater than one (indicating that there is more than one defective announcement), run this test again and repeat this step. 2. If after deleting and rerecording all defective announcements, the checksum test still fails, reset the circuit pack using the **reset board PCSS** command and run this test again. 3. If the test still continues to fail, reseat the circuit pack and restore all announcements with an appropriate time estimate (for example, 40 minutes.) Then rerecord the lost announcements (that is, those recorded since the last save operation) and run this test again. 4. If the test still continues to fail, replace the circuit pack, and run this test again. **WARNING:** *Replacing the circuit pack results in loss of integrated announcements. See "General Notes" near the beginning of this Maintenance procedure.*

Continued on next page

Table 3-24. TEST #209 Announcement Checksum Test — *Continued*

Error Code	Test Result	Description/ Recommendation
	PASS	All recorded announcements checksum correctly, indicating that the speech main memory is functioning properly. User-reported troubles on this circuit pack should be investigated using other circuit pack and port tests. Refer to "ANN-PT (Announcement Port)" Maintenance documentation for a description of the port tests.

Notes:

a. The Announcement circuit pack can exhibit a condition that does not allow recording.

If the circuit pack gets locked into this state (this is an extremely rare condition), two of the Announcement Ports on the circuit pack will be unusable by software, one of which is the record port. Also, **save/restore announcements** will not work, since the record port looks busy to the circuit pack. Note that software does not have any way of knowing this, and attempts to use the ports.

If the circuit pack is locked into this state, the following symptoms are observed:

1. When attempting to record an announcement, users hear the proper record tone, but the announcement do not record (they do not know it until the announcement is played back).
2. Performing a **test board long** when the circuit pack is in this state yield the following abort codes:
   - Ports 1 AND 9 abort Test #206 with code 1024
   - Ports 1 AND 9 abort Test #205 with code 2000
   - Board level Tests #209 and #210 abort with code 1024
3. The **save/restore announcements** command times out with:

   `Error encountered, can't complete request`

The Announcement circuit pack lock-up can be cleared remotely by performing a soft reset to the circuit pack:

- **busyout board PCSS** (this command drops all calls in progress on the Announcement circuit pack)
- reset circuit pack using the **reset board PCSS** command
- release circuit pack using the **release board PCSS** command

140AY Loop Around Test (#210)

This test checks the integrity of the record channel on the Announcement circuit pack (Announcement Port 1). The main function of the 140AY device is to accept Pulse Code Modulation (PCM)/Adaptive Differential Pulse Code Modulation (ADPCM) samples and compress/expand the samples using ADPCM. This test connects a Tone Generator to one port (Announcement Port 1, the recording port), and a Tone Detector to another port (Announcement Port 9). A tone is generated by the Tone Generator on the first port and looped through the 140AY device to the second port. The Tone Detector then responds with a tone present/absent message. The 140AY Loop Around Test is repeated at three different speech compression rates.

Since this test involves sending a tone through two different ports, the Playback Speech Memory Array (PSMA) Test (#206) [see ANN-PT (Announcement Port) Maintenance documentation for a description of this test] is run on the two ports first to make sure that they are working properly.

Table 3-25. TEST #210 140AY Loop Around Test

Error Code	Test Result	Description/ Recommendation
1-3	ABORT	Response to the test request was not received within the allowable time period. The error code indicates at which speech compression rate the test aborted (one being the first rate tested, three being the last). 1. Retry the command at 1-minute intervals a maximum of 5 times.
10	ABORT	The PSMA Test (#206) failed on Announcement Port 1.
90	ABORT	The PSMA Test (#206) failed on Announcement Port 9. 1. Refer to "ANN-PT (Announcement Port)" Maintenance documentation, Test #206.
1000	ABORT	System resources required to run this test are not available. This test needs Announcement Ports 1 and 9 to run. One of the ports may be in use on a valid call. 1. Retry the command at 1-minute intervals a maximum of 5 times. 2. If the test continues to abort and Ports 1 and 9 are not in use, escalate the problem.
1002	ABORT	The system could not allocate time slots for the test. The system may be under heavy traffic conditions or it may have time slots out-of-service due to TDM-BUS errors. Refer to "TDM-BUS (TDM Bus)" Maintenance documentation to diagnose any active TDM-BUS errors. 1. If system has no TDM-BUS errors and is not handling heavy traffic, repeat test at 1-minute intervals a maximum of 5 times.

Continued on next page

Table 3-25. TEST #210 140AY Loop Around Test — *Continued*

Error Code	Test Result	Description/ Recommendation
1003	ABORT	The system could not allocate a tone receiver for the test. The system may be oversized for the number of Tone Detectors present or some Tone Detectors may be out-of-service. 1. Look for TTR-LEV errors in the Error Log. If present, refer to the "TTR-LEV (TTR Level)" Maintenance documentation. 2. Look for TONE-PT errors in the Error Log. If present, refer to the "TONE-PT (Tone Generator)" Maintenance documentation. 3. If neither condition exists, retry the test at 1-minute intervals a maximum of 5 times.
1007	ABORT	The Announcement circuit pack thinks that Port 1 or Port 9 is busy. 1. Retry the command at 1-minute intervals a maximum of 5 times. 2. If the test continues to abort, follow the Announcement Port maintenance procedures for Ports 1 and 9.
1024	ABORT	Announcement circuit pack blocked the test because an announcement download is in progress. If an announcement download is in progress, a **status data-module <announcement data extension>** command should show that the announcement data port is connected to a NETCON data channel, and the "card-in-use" LED for the memory card should be on (to determine the extension of the announcement data module, use the **list data-module** command). See Note (a) at end of table for more information. 1. Wait until download is finished (can take up to 45 minutes), and then run the test again. 2. If the test continues to abort and there is no download in progress, escalate the problem.
2000	ABORT	Response to the test request was not received within the allowable time period. If Error Type 1538 is present in the Error Log, follow the maintenance strategy recommended for this error type. 1. Retry the command at 1-minute intervals a maximum of 5 times.
2007	ABORT	The Announcement circuit pack thinks that Port 1 or Port 9 is busy. 1. Retry the command at 1-minute intervals a maximum of 5 times. 2. If the test continues to abort, follow the Announcement Port maintenance procedures for Ports 1 and 9.
2100	ABORT	Could not allocate the necessary system resources to run this test. 1. Retry the command at 1-minute intervals a maximum of 5 times.
	ABORT	Internal system error. 1. Retry the command at 1-minute intervals a maximum of 5 times.

Continued on next page

Table 3-25. TEST #210 140AY Loop Around Test — *Continued*

Error Code	Test Result	Description/ Recommendation
1-3	FAIL	Test failed. The error code indicates at which speech compression rate the test actually failed (one being the first rate tested, three being the last). 1. Reset the circuit pack via the **reset board PCSS** command and then run this test again. If the test still fails, replace the circuit pack (see Warning) and run this test again. 2. If there are recurring alarms on this circuit pack caused by this test failing, replace the circuit pack even if Step 1 works (see Warning). **WARNING:** *Replacing the circuit pack results in loss of integrated announcements. See "General Notes" near the beginning of this Maintenance procedure.*
	PASS	The record channel on the Announcement circuit pack is functioning properly. User-reported troubles on this circuit pack should be investigated using other circuit pack and port tests. Refer to "ANN-PT (Announcement Port)" Maintenance documentation for a description of the port tests.

Notes:

a. The Announcement circuit pack can exhibit a condition that does not allow recording.

If the circuit pack gets locked into this state (this is an extremely rare condition), two of the Announcement Ports on the circuit pack will be unusable by software, one of which is the record port. Also, **save/restore announcements** will not work since the record port looks busy to the circuit pack. Note that software does not have any way of knowing this, and attempts to use the ports.

If the circuit pack is locked into this state, the following symptoms are observed:

1. When attempting to record an announcement, users hear the proper record tone, but the announcement does not record (they do not know it until the announcement is played back).
2. Performing a **test board long** when the circuit pack is in this state yields the following abort codes:
   - Ports 1 AND 9 abort Test #206 with code 1024
   - Ports 1 AND 9 abort Test #205 with code 2000
   - Board level Tests #209 and #210 abort with code 1024

3. The **save/restore announcements** command times out with:

   `Error encountered, can't complete request`

The Announcement circuit pack lock-up can be cleared remotely by performing a soft reset to the circuit pack:

- **busyout board PCSS** (this command drops all calls in progress on the Announcement circuit pack)
- reset circuit pack using the **reset board PCSS** command
- release circuit pack using the **release board PCSS** command

Super Frame Match Inquiry Test (#211)

The super frame is a means by which the SP synchronizes with the 140AY device on the Announcement circuit pack. If the super frame is not synchronized, the SP is not able to properly process record/playback requests. Both the SP and the hardware generate a super frame pulse. When these two pulses are out of synch, the SP sets a flag to indicate the mismatch. When this test is run, the state of this flag is returned.

Table 3-26. TEST #211 Super Frame Match Inquiry

Error Code	Test Result	Description/ Recommendation
2000	ABORT	Response to the test request was not received within the allowable time period. If Error Type 1538 is present in the Error Log, follow the maintenance strategy recommended for this Error Type.
2100	ABORT	Could not allocate the necessary system resources to run this test.
	ABORT	Internal system error. 1. Retry the command at 1-minute intervals a maximum of 5 times.
	FAIL	Test failed. Announcement playbacks should sound corrupted. 1. Reset the circuit pack via the **reset board PCSS** command and then run this test again. If the test continues to fail, replace the circuit pack (see Warning). 2. If there are recurring alarms on this circuit pack caused by this test failing, replace the circuit pack even if Step 1 works (see Warning). **WARNING:** *Replacing the circuit pack results in loss of integrated announcements. See "General Notes" near the beginning of this Maintenance procedure.*

Continued on next page

Table 3-26. TEST #211 Super Frame Match Inquiry — *Continued*

Error Code	Test Result	Description/ Recommendation
	PASS	The SP can properly process record/playback requests. User-reported troubles on this circuit pack should be investigated using other circuit pack and port tests. Refer to "ANN-PT (Announcement Port)" Maintenance documentation for a description of the port tests.

Clock Match Inquiry Test (#212)

This test is supported to determine the state of the clock generation circuitry on the Announcement circuit pack. This circuitry is used for controlling various pieces of the hardware, like the 140AY device. It is also used to synchronize the Announcement circuit pack with the clock that is on the backplane.

Table 3-27. TEST #212 Clock Match Inquiry Test

Error Code	Test Result	Description/ Recommendation
2000	ABORT	Response to the test request was not received within the allowable time period. If Error Type 1538 is present in the Error Log, follow the maintenance strategy recommended for this Error Type.
2100	ABORT	Could not allocate the necessary system resources to run this test.
	ABORT	Internal system error. 1. Retry the command at 1-minute intervals a maximum of 5 times.
	FAIL	Test failed. Announcements recorded or played back while the clock circuitry is not functioning properly sound distorted. The ANN-BD may be defective or the Active Tone-Clock circuit pack (TONE-BD) may be marginal and is causing this test to fail. 1. Reset the circuit pack via the **reset board PCSS** command and then run this test again. If the test continues to fail, proceed to Step 2 or 3 as applicable. **WARNING:** *Replacing the circuit pack results in loss of integrated announcements. See "General Notes" near the beginning of this Maintenance procedure.*

Continued on next page

Table 3-27. TEST #212 Clock Match Inquiry Test — *Continued*

Error Code	Test Result	Description/ Recommendation
	FAIL *(cont'd.)*	2. Replace the ANN-BD. Rerun the test. If the test continues to fail, replace the Tone-Clock circuit pack. **WARNING:** *Replacing the TONE-BD causes a COLD 2 reset. See the "How to Replace a Tone-Clock Circuit Pack" section in the "TONE-BD (Tone-Clock Circuit Pack)" Maintenance documentation. Replacing the ANN-BD results in loss of integrated announcements. See "General Notes" near the beginning of this Maintenance procedure.* 3. If there are recurring alarms on this circuit pack caused by this test failing, replace the ANN-BD even if the previous steps were successful.
	PASS	Announcement record/playbacks should have clear sound quality. User-reported troubles on this circuit pack should be investigated using other circuit packs and port tests. Refer to "ANN-PT (Announcement Port)" Maintenance documentation for a description of the port tests.

ANN-PT (Announcement Port)

MO Name (in Alarm Log)	Alarm Level	Initial Command to Run[1]	Full Name of MO
ANN-PT	MINOR	test port PCSSpp l	Announcement Port
ANN-PT	WRN	test port PCSSpp l	Announcement Port

1. Where P is the port network number (1 for PPN); C is the carrier designation (for example, A, B, or C); and SS is the address of the slot in the carrier where the circuit pack is located (for example, 01, 02, ..., etc.).

The TN750 Announcement circuit pack is a service circuit pack that provides an integrated means for recording announcements that can be played back on demand by call processing as part of a calling feature (that is, announcements on hunt group calls). There are 16 Announcement Ports on the Announcement circuit pack. Each port can play any integrated announcement, independently of the other ports. If there are any errors associated with the circuit pack, refer to "ANN-BD (Announcement Circuit Pack)" Maintenance documentation.

The Announcement circuit pack has two processors on it. The first processor, or Angel, controls the circuit pack, and communicates with the switch via the control channel on the TDM Bus. The second processor, or SP, controls the speech memory and announcements. Digital speech is converted from its TDM Bus form to an internal storage form (for recording) and vice versa (for playbacks) by the 140AY device on the circuit pack, which has 16 channels (one for each Announcement Port).

General Notes

Here are a few **very important** general notes that apply to any problem on the Announcement circuit pack. The user should read this before attempting to work on the TN750 Announcement circuit pack or Announcement Ports, **especially if the circuit pack needs to be replaced.**

1. The TN750/B Announcement circuit pack retains all integrated announcements *as long as the circuit pack has power*. For this reason, whenever there is a problem with either the Announcement circuit pack or an Announcement Port that may require the circuit pack to be reset, it is always better to try to reset the circuit pack via the **reset board PCSS** command first and, if that does not work, then try to reseat it. **Announcements are preserved through a software reset, but they are lost when the circuit pack is reseated.**

2. **If a customer has announcements on the Announcement circuit pack, then announcements must be saved on the system tape to ensure that they are not lost.** This should be done as soon as the announcements are recorded on the circuit pack (or whenever they are changed), assuming that the pack is in proper working order (see Note).

   NOTE:
   Unlike translations, announcements are NEVER automatically saved to the memory card.

3. The **save announcements** command replaces the announcement file on the card with the Announcement circuit pack speech memory. Care must be taken not to mistakenly enter this command, thereby destroying a valid file on tape.
4. The **restore announcements** command replaces the Announcement circuit pack speech memory with the announcement file on the card. Care must be taken not to mistakenly enter this command, thereby destroying valid speech memory (especially if the card does not have a valid announcement file on it).
5. Whenever the Announcement circuit pack is replaced, announcements must always be re-recorded or downloaded to the new circuit pack. Otherwise, call processing is not able to use the circuit pack.
6. If announcement speech memory is corrupted, **announcements should not be saved**, that is, if the Announcement Checksum Test (#209) fails or if the speech sounds corrupted on playback. This can ruin a good announcement file and potentially cause errors/alarms on any circuit pack to which the new file is downloaded. However, if the customer does not have a valid announcement file, then announcements can be saved in an effort to try to retain some of them (all of the announcements recorded may not be corrupted).
7. Although Announcement Port 5 and Data Line Circuit Port 17 on the Announcement circuit pack are logically two separate ports, they are physically the same port. Therefore, if one of the ports is in use, the other one will be busy. Also, if Announcement Port 5 is out-of-service, the Data Line Circuit Port is taken out-of-service. However, if the Data Line Circuit Port is out-of-service, the Announcement Port remains in-service.

Announcement Administration

A brief description of the integrated announcement administration is given here to aid in the troubleshooting of the Announcement circuit pack and its ports. In many cases, it is necessary to record, play back, and/or delete announcements to resolve an alarm. It may also be necessary to save and restore announcements as part of the maintenance procedures. For a complete description of integrated announcement administration, please refer to *DEFINITY Enterprise Communications Server Release 6 Administration and Feature Description*, 555-230-522.

Announcement Session

Announcements can be recorded, played back, and deleted from an announcement session. A station's COS needs to include console permissions in order for that station to be able to enter an announcement session. To enter an announcement session, go off-hook on a station that has console permissions and enter the appropriate FAC (administered as Announcement access code on the FACs form). Dial tone should be returned at this point. Enter the extension of the announcement that needs to be recorded, deleted or played back. Again, dial tone should be heard. To record an announcement, press station keypad digit 1, record after the tone, and hang up when done. To play back an announcement, press station keypad digit 2. To delete an announcement, press station keypad digit 3 (confirmation tone is given if the delete worked). Announcements can also be played back by simply calling the announcement extension associated with them.

Uploading/Downloading Announcements

Integrated announcements on the TN750 Announcement circuit pack can be uploaded to the memory card with the **save announcements** command. Similarly, integrated announcements can be downloaded to the Announcement circuit pack with the **restore announcements** command. Both of these commands require a free data module of NETCON type to be administered, a data module of announcement type (on the Announcement circuit pack) to be administered, and a memory card. These commands are useful in maintaining the customer's recorded announcements. Depending on system traffic, announcement uploads/downloads take between 30 and 45 minutes.

The system **automatically** tries to download the Announcement circuit pack five minutes after it is inserted. This automatic download procedure is aborted if:

1. An announcement is recorded within 10 minutes of circuit pack insertion.
2. An announcement download is invoked sooner with the administration terminal **restore announcements** command.
3. There is no announcement and/or NETCON data module administered.
4. Either the announcement data module is busy or all the administered NETCON data modules are busy.
5. There is no memory card in the system.
6. The memory card in the system does not have a valid announcement file saved on it.

NOTE:
Unlike translations, there is no provision in the system for automatically saving announcements to the memory card.

Hardware Error Log Entries and Test to Clear Values

Table 3-28. Announcement Port Error Log Entries

Error Type	Aux Data	Associated Test	Alarm Level	On/Off Board	Test to Clear Value
0[1]	0	Any	Any	Any	test port PCSSpp sh r 1
1		Playback Speech Memory Array (PSMA) Test (#206)	MINOR	ON	test port PCSSpp sh r 3
18	0	The port was busied out	WARNING	OFF	release port PCSSpp
130 (a)		None	WARNING	ON	test port PCSSpp sh
257		Channel Administration Memory Array (CAMA) Test (#205)	MINOR	ON	test port PCSSpp l r 3
	17667	In-line error			
513		140AY Channel Sanity Inquiry Test (#222)	MINOR	ON	test port PCSSpp sh r 3
	17684	In-line error			
769 (b)		None			

1. Run the Short Test Sequence first. If all tests pass, run the Long Test Sequence. Refer to the appropriate test description and follow the recommended procedures.

Notes:

a. This error type indicates that the circuit pack has been removed or has been insane for more than 11 minutes. To clear the error, reinsert or replace the circuit pack.

b. This error is logged and the port is alarmed when an alarm is raised on the Announcement circuit pack because of a faulty condition with a common circuit pack resource. Any one of the following alarmed errors on the Announcement circuit pack causes this error to be logged against the Announcement Port: 1793, 2049, 2305, 2561. Follow the ANN-BD (Announcement Circuit Pack) Maintenance documentation to resolve these alarms. When the corresponding circuit pack alarm is cleared, this alarm clears.

System Technician-Demanded Tests: Descriptions and Error Codes

Always investigate tests in the order presented in the table below when inspecting errors in the system. By clearing error codes associated with the *Channel Administration Memory Array (CAMA) Test,* for example, you may also clear errors generated from other tests in the testing sequence.

Order of Investigation	Short Test Sequence	Long Test Sequence	D/ND[1]
Channel Administration Memory Array (CAMA) Test (#205)		X	ND
Playback Speech Memory Array (PSMA) Test (#206)	X	X	ND
140AY Channel Sanity Inquiry Test (#222)	X	X	ND

1. D = Destructive; ND = Nondestructive

Channel Administration Memory Array (CAMA) Test (#205)

This test is a memory device that stores information used to control the 140AY device. The Angel asynchronously feeds the CAMA with the control information. During the CAMA test, the Angel writes patterns into the CAMA, reads them back, and verifies that they match. If the patterns do not match, the test fails. This test is run periodically by the switch maintenance and by the Announcement circuit pack in the background.

Table 3-29. TEST #205 Channel Administration Memory Array (CAMA) Test

Error Code	Test Result	Description/ Recommendation
1000	ABORT	System resources required to run this test are not available. The port may be in use on a valid call. 1. Retry the command at 1-minute intervals a maximum of 5 times.
2000	ABORT	Response to the test request was not received within the allowable time period. See Note (a) at end of table for more information.
2100	ABORT	Could not allocate the necessary system resources to run this test.
	ABORT	Internal system error. 1. Retry the command at 1-minute intervals a maximum of 5 times.

Continued on next page

Table 3-29. TEST #205 Channel Administration Memory Array (CAMA) Test — *Continued*

Error Code	Test Result	Description/ Recommendation
	FAIL	Test failed. Announcements played back on this port may sound corrupted. 1. Reset the circuit pack via the **reset board PCSS** command and then run this test again. If the test continues to fail, replace the circuit pack (see Warning). 2. If there are recurring alarms on this port caused by this test failing, replace the circuit pack even if Step 1 works (see Warning). **WARNING:** *Replacing the circuit pack results in loss of integrated announcements. Refer to "'General Notes'' near the beginning of this Maintenance procedure.*
	PASS	This test verifies that the Angel processor can properly set up this port for playbacks. User-reported troubles on this circuit pack should be investigated using other port and circuit pack tests. (Refer to "ANN-BD (Announcement Circuit Pack)" Maintenance documentation for a description of the circuit pack tests.)

Notes:

a. The Announcement circuit pack can exhibit a condition that does not allow recording.

If the circuit pack gets locked into this state (this is an extremely rare condition), two of the Announcement Ports on the circuit pack (one of which is the record port) will be unusable by software. Also, **save/restore announcements** will not work since the record port looks busy to the circuit pack. Note that software does not have any way of knowing this and attempts to use the ports.

If the circuit pack is locked into this state, the following symptoms are observed:

1. When attempting to record an announcement, users hear the proper record tone, but the announcement does not record (they do not know it until the announcement is played back).
2. Performing a **test board long** when the circuit pack is in this state yields the following abort codes:
   - Ports 1 AND 9 abort Test #206 with code 1024
   - Ports 1 AND 9 abort Test #205 with code 2000

- Board level Tests #209 and #210 abort with code 1024

3. The **save/restore announcements** command times out with:

   Error encountered, can't complete request

The Announcement circuit pack lock-up can be cleared remotely by performing a soft reset to the circuit pack:

- **busyout board PCSS** (this command drops all calls in progress on the Announcement circuit pack)
- reset circuit pack using the **reset board PCSS** command
- release circuit pack using the **release board PCSS** command

Playback Speech Memory Array (PSMA) Test (#206)

The PSMA test checks the integrity of a playback channel's interface to the speech memory and the TDM Bus. The SP has an internal buffer that contains a specific 256-byte sequence. During this test, the byte sequence is "played" through the 140AY device onto the TDM Bus. A General Purpose Tone Detector is used to confirm that the proper sequence was played. **This test is very important.** It is the only test that actually checks an Announcement Port's ability to play back an announcement on the TDM Bus. If the test fails, the Tone Detector returns the number of bytes that did not match the expected sequence. The larger the number, the more severe the problem with that port. If this test fails, announcements played over this port should sound corrupted.

It is the only test that actually checks an Announcement Port's ability to play back an announcement on the TDM Bus. If the test fails, the Tone Detector returns the number of bytes that did not match the expected sequence. The larger the number, the more severe the problem with that port. If this test fails, announcements played over this port should sound corrupted.

Table 3-30. TEST #206 Playback Speech Memory Array (PSMA) Test

Error Code	Test Result	Description/ Recommendation
1000	ABORT	System resources required to run this test are not available. The port may be in use on a valid call. 1. Retry the command at 1-minute intervals a maximum of 5 times.

Continued on next page

Table 3-30. TEST #206 Playback Speech Memory Array (PSMA) Test — *Continued*

Error Code	Test Result	Description/ Recommendation
1002	ABORT	The system could not allocate time slots for the test. The system may be under heavy traffic conditions or it may have time slots out-of-service due to TDM-BUS errors. Refer to "TDM-BUS (TDM Bus)" Maintenance documentation to diagnose any active TDM-BUS errors. 1. If system has no TDM-BUS errors and is not handling heavy traffic, repeat the test at 1-minute intervals a maximum of 5 times.
1003	ABORT	The system could not allocate a tone receiver for the test. The system may be oversized for the number of Tone Detectors present or some Tone Detectors may be out-of-service. 1. Look for TTR-LEV errors in the Error Log. If present, refer to "TTR-LEV (TTR Level)" Maintenance documentation. 2. Look for TONE-PT errors in the Error Log. If present, refer to "TONE-PT (Tone Generator)" Maintenance documentation. 3. If neither condition exists, retry the test at 1-minute intervals a maximum of 5 times.
1024	ABORT	Announcement circuit pack blocked the test because an announcement download is in progress. If an announcement download is in progress, a **status data-module <announcement data extension>** command should show that the announcement data port is connected to a NETCON data channel, and the memory card should be active. (To determine the extension of the announcement data module, use the **list data-module** command.) See Note (a) at end of table for more information. 1. Wait until download is finished (could take a maximum of 45 minutes), and then run the test again. 2. If the test continues to abort and there is no download in progress, escalate the problem.
2000	ABORT	Response to the test request was not received within the allowable time period.
2100	ABORT	Could not allocate the necessary system resources to run this test.
	ABORT	Internal system error. 1. Retry the command at 1-minute intervals a maximum of 5 times.

Continued on next page

Table 3-30. TEST #206 Playback Speech Memory Array (PSMA) Test — *Continued*

Error Code	Test Result	Description/ Recommendation
1 to 254	FAIL	Test failed. The error code indicates the number of byte count errors found by the Tone Detector. 1. Reset the circuit pack via the **reset board PCSS** command and then run this test again. If the test continues to fail, replace the circuit pack (see Warning). 2. If there are recurring alarms on this port caused by this test failing, replace the circuit pack even if Step 1 works (see Warning). **WARNING:** *Replacing the circuit pack results in loss of integrated announcements. Refer to "General Notes" near the beginning of this Maintenance procedure.*
255	FAIL	Test failed. The Announcement Port and the Tone Detector never synchronized. Check for active GPTD-PT errors, and refer to "GPTD-PT [General Purpose Tone Detector Port (CPTR)]" Maintenance documentation to diagnose them first. 1. If there are no active GPTD-PT errors, reset the circuit pack via the **reset board PCSS** command and then run this test again. If the test continues to fail, replace the circuit pack (see Warning). 2. If there are recurring alarms on this port caused by this test failing, replace the circuit pack even if Step 1 works (see Warning). **WARNING:** *Replacing the circuit pack results in loss of integrated announcements. Refer to "General Notes"near the beginning of this Maintenance procedure.*
	PASS	This port can cleanly play announcements. User-reported troubles on this pack should be investigated using other port and circuit pack tests. Refer to "ANN-BD (Announcement Circuit Pack)" Maintenance documentation for a description of the circuit pack tests.

Notes:

a. The Announcement circuit pack can exhibit a condition that does not allow recording.

If the circuit pack gets locked into this state (this is an extremely rare condition), two of the Announcement Ports on the circuit pack (one of which is the record port) will be unusable by software. Also, **save/restore**

announcements will not work, since the record port looks busy to the circuit pack. Note that software does not have any way of knowing this and attempts to use the ports.

If the circuit pack is locked into this state, the following symptoms are observed:

1. When attempting to record an announcement, users hear the proper record tone, but the announcement does not record (they do not know it until the announcement is played back).
2. Performing a **test board long** when the circuit pack is in this state yields the following abort codes:
   - Ports 1 and 9 abort Test #206 with code 1024
   - Ports 1 and 9 abort Test #205 with code 2000
   - Board level Tests #209 and #210 abort with code 1024
3. The **save/restore announcements** command times out with:

   Error encountered, can't complete request

The Announcement circuit pack lock-up can be cleared remotely by performing a soft reset to the circuit pack:

- **busyout board PCSS** (this command drops all calls in progress on the Announcement circuit pack)
- reset circuit pack using the **reset board PCSS** command
- release circuit pack using the **release board PCSS** command

140AY Channel Sanity Inquiry Test (#222)

The Angel keeps a sanity status bit for each of the 16 channels on the 140AY device. This test queries the Angel to determine the status for a particular channel. If a channel is insane, that implies that announcements cannot be played back on that channel.

Table 3-31. TEST #222 140AY Channel Sanity Inquiry Test

Error Code	Test Result	Description/ Recommendation
2000	ABORT	Response to the test request was not received within the allowable time period.
2100	ABORT	Could not allocate the necessary system resources to run this test.
	ABORT	Internal system error. 1. Retry the command at 1-minute intervals a maximum of 5 times.
	FAIL	Test failed. Announcements cannot be played back over this port. 1. Reset the circuit pack via the **reset board PCSS** command and then run this test again. If the test continues to fail, replace the circuit pack (see Warning). 2. If there are recurring alarms on this port caused by this test failing, replace the circuit pack even if Step 1 works (see Warning). **WARNING:** *Replacing the circuit pack results in loss of integrated announcements. Refer to "General Notes" near the beginning of this Maintenance procedure.*
	PASS	Announcements can be played back over this port. User-reported troubles on this pack should be investigated using other port and circuit pack tests. Refer to the "ANN-BD (Announcement Circuit Pack)" Maintenance documentation for a description of the circuit pack tests.

ANNOUNCE (Announce)

MO Name (in Alarm Log)	Alarm Level	Initial Command to Run	Full Name of MO
ANNOUNCE	none	none	ANNOUNCEMENT

The ANNOUNCE MO logs an error in the hardware error log if at least one of the following is true:

- The **save announcements** or **restore announcements** command does not complete successfully, or the
- System fails to restore announcements from the memory card at boot time.

Figure 3-2 shows the connection of the Announcement Circuit Pack to the system. To save or restore announcements, an ANNOUNCEMENT Data Extension must be administered, and at least one DATA-CHL (Network Control Data Channel) must be in the in-service/idle state.

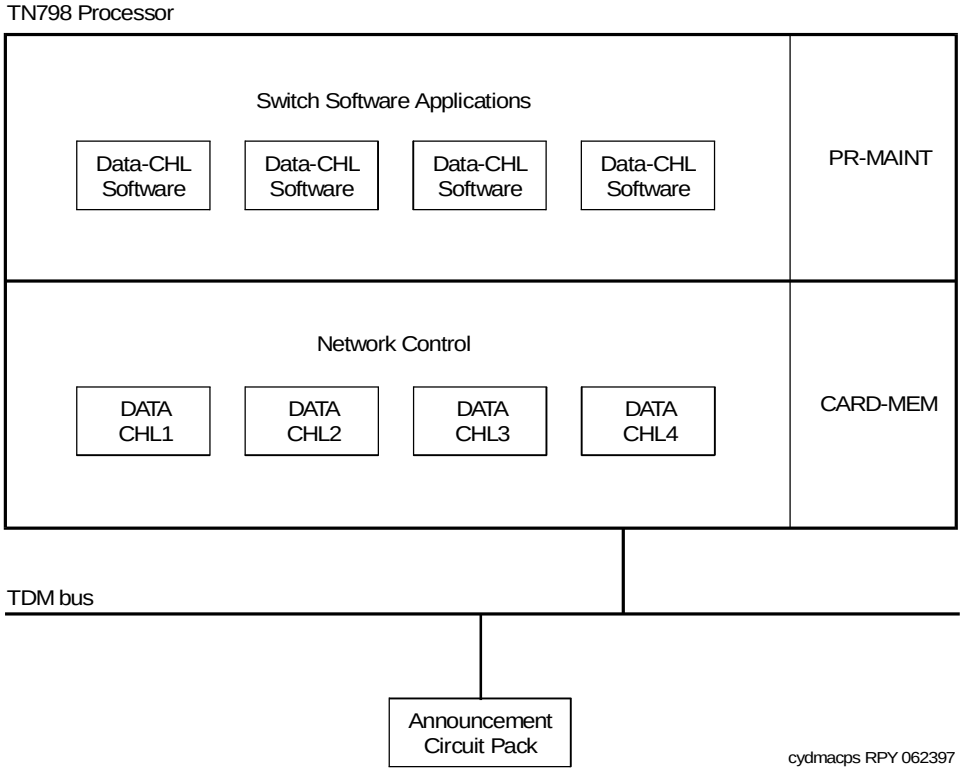

Figure 3-2. Connection of Announcement Circuit Pack to the System

Hardware Error Log Entries

Table 3-32. ANNOUNCE Error Log Entries

Error Type	Aux Data	Associated Test	Alarm Level	On/Off Board	Test to Clear Value
1(a)(d)	any	None			
257(d)	any	None			
513(b)(d)	0	None			
769(d)	0	None			
1025(d)	any	None			

Notes:

a. Error occurred while saving announcements. (See Table 3-33 in the next section for an explanation of Aux Data and for recommended repair actions.)

b. User pressed cancel while announcements were being saved.

c. Error occurred while restoring announcements. (See Table 3-33 in the next section for an explanation of Aux Data and for recommended repair actions.)

d. The port field for this error contained the active PE complex when the error occurred.

Aux Data Error Codes and Recommended Repair Procedures

Table 3-33. Aux Data Error Codes and Recommended Repair Procedures

Aux Data	Description/ Recommendation
9000 through 9031	CARD-MEM errors Check and resolve CARD-MEM errors and alarms.
32001	Internal system error. 1. Check other ANNOUNCE errors and take corrective action. If there are no other ANNOUNCE errors, do the following: 2. Retry the command at 2-minute intervals a maximum of 3 times. 3. If the **save/restore announcements** command fails, escalate the problem.

Continued on next page

Table 3-33. Aux Data Error Codes and Recommended Repair Procedures — *Continued*

Aux Data	Description/ Recommendation
32002	Announcement circuit pack is in use. 1. Retry the command at 2-minute intervals a maximum of three times. 2. If the **save/restore announcements** command fails, escalate the problem.
32003	Announcement port is in use. 1. Wait for all Announcement ports to become available. 2. Enter the **save/restore announcements** command.
32004	There are no announcements recorded on the Announcement Circuit Pack. The **save announcements** command is not allowed to prevent the destroying of the announcement file on tape [286 systems] or on the memory card [386 systems].
32005	Integrated announcement circuit pack is not present. The Announcement Circuit Pack is not inserted, or it is defective. 1. Enter the **list config** command to check for the presence of the circuit pack in the system. 2. If the Announcement Circuit Pack is present, use the **test board PCSS** command to check the status of the Announcement Circuit Pack.
32006	Announcement Data Module not available. 1. Use the **status** command to check the status of the Announcement Data Module.
32007	Announcement Data Module out of service. 1. Use the **status** command to check the status of the Announcement Data Module.
32008	Announcement data is being saved or loaded. 1. Retry the command at 2-minute intervals a maximum of three times. 2. If the **save/restore announcements** command fails, escalate the problem.
32009	Required DATA-CHL is not administered or out of service. (A DATA-CHL is required to save or restore announcements.) 1. Add a DATA-CHL if none is administered. 2. If a DATA-CHL is administered, use the **status** command to check the status of all DATA-CHLs. At least one DATA-CHL should be in the in-service/idle state.
32010 32013	DATA-CHL is not administered, or it is unavailable. (A DATA-CHL is required to save or restore announcements.) 1. Add a DATA-CHL if none is administered. 2. If a DATA-CHL is administered, use the **status** command to check the status of all DATA-CHLs. At least one DATA-CHL should be in the in-service/idle state.
32012	Required Announcement Data Module is not administered. 1. Add an Announcement Data Module and repeat the command.

Continued on next page

Table 3-33. Aux Data Error Codes and Recommended Repair Procedures — *Continued*

Aux Data	Description/ Recommendation
32015	Time of day not set. 1. Set the time of day, and reenter the **save/restore announcements** command.
32016	Internal system errors. Check for any other ANNOUNCE errors and take corrective action.If there are no other announcements errors, do the following: 1. Retry the command at 2-minute intervals a maximum of three times. 2. If the **save/restore announcements** command fails, escalate the problem.

BRI-BD/LGATE-BD (ISDN-BRI Line Circuit Pack)

MO Name (in Alarm Log)	Alarm Level	Initial Command to Run[1]	Full Name of MO
BRI-BD	MAJOR	test board PCSS l	ISDN-BRI Line Circuit Pack
BRI-BD	MINOR	test board PCSS l	ISDN-BRI Line Circuit Pack
BRI-BD	WARNING	test board PCSS sh	ISDN-BRI Line Circuit Pack
LGATE-BD	MAJOR	test board PCSS l	DEFINITY Lan Gateway
LGATE-BD	MINOR	test board PCSS l	DEFINITY Lan Gateway
LGATE-BD	WARNING	test board PCSS sh	DEFINITY Lan Gateway

1. Where P is the port network number (1 for PPN); C is the carrier designation (A, B, or C); and SS is the address of the slot in the carrier where the circuit pack is located (01, 02, ..., etc.).

NOTE:
Some of the information in this section is reserved for future use.

ISDN-BRI Line is a packet port circuit pack that provides access to ISDN-BRI endpoints. The ISDN-BRI Line circuit pack supports 12 ports, each of which provides access to ISDN stations. Voice and circuit-switched data from the ISDN stations are carried on the Time Division Multiplex (TDM) Bus.

LEDS

The ISDN-BRI Line circuit pack performs extensive initialization tests and lights both the red and green LEDS during the initialization testing. See "LED Interpretation" in Chapter 1, "Maintenance for R6csi Compact Modular Cabinets", for more details on circuit pack status LEDs.

Hardware Error Log Entries and Test to Clear Values

Table 3-34. BRI-BD Error Log Entries

Error Type	Aux Data	Associated Test	Alarm Level	On/Off Board	Test to Clear Value
0[1]	0	Any	Any	Any	test board PCSS sh r 1

Continued on next page

Table 3-34. BRI-BD Error Log Entries — *Continued*

Error Type	Aux Data	Associated Test	Alarm Level	On/Off Board	Test to Clear Value
1(a)	Any	None	MINOR	ON	
18(b)	0	busyout board PCSS	WARNING	OFF	release board PCSS
23(c)	0	None	WARNING	OFF	
257(d)	65535	Control Channel Loop Test (#52)	MINOR	ON	test board PCSS r 20
513(e)	4352 to 4357				
769(f)	4358				
1025(g)	4363	NPE Audit Test (#50)			
1293 to 1294 (h)	46088 to 46096	SAKI Sanity Test (#534)	MINOR	ON	See footnote (h)
1537 to 1538 (i)	46082		MINOR	ON	
1793 (j)	46080		MINOR	ON	
1794 (j)	46094		MINOR	ON	
1795 (j)	46085		MINOR	ON	
2306 (j) 3330 (k)	46083	LANBIC Receive Parity Error Counter Test (#595)	MINOR	OFF	
3840 (l)	4096 to 4101				
3843 (m)	46097				
3999 (n)	Any	None			

1. Run the Short Test Sequence first. If all tests pass, run the Long Test Sequence. Refer to the appropriate test description and follow the recommended procedures.

Notes:

a. This error indicates the circuit pack totally stopped functioning or it was physically removed from the system.

NOTE:
The alarm is logged approximately 11 minutes after the circuit pack has been removed and/or SAKI Sanity Test (#53) fails.

If the circuit pack is not in the system, insert a circuit pack (in the same slot as the error indicates) to resolve this error. Or, if the circuit pack is in the system and the red LED is on, then follow the instructions for a Red alarm in the "Control and Port Circuit Pack Status LEDs" section in Chapter 1, "Maintenance for R6csi Compact Modular Cabinets".

b. This circuit pack has been busied out via the **busyout board PCSS** command.

c. Port(s) has(have) been administered on this circuit pack but the circuit pack is not physically present.

d. This error indicates transient communication problems between the switch and this circuit pack. Execute the **test board PCSS** command and refer to the repair procedures for the Control Channel Loop Around Test (#52).

e. An on-board hardware failure has been detected by the circuit pack.

The reported aux data values correspond to the following detected errors:

4352	External RAM error
4353	Internal RAM error
4355	ROM Checksum error
4357	Instruction set error

Reset the circuit pack by executing the **busyout board PCSS** and **reset board PCSS** commands. When it is reset, the circuit pack executes a set of tests to detect the presence of any of the above faults. The detection of one of these errors during initialization causes the circuit pack to lock-up and appear insane to the system. See the repair procedure in footnote (a) for error type 1.

f. This error is reported by the circuit pack when it detects a program logic error. While no action is required, this error may lead to errors of other types being reported against this circuit pack.

g. This error is reported by the circuit pack when it cannot update NPE memory and read it back. This error type can be ignored, but may lead to errors of other types being reported against this circuit pack.

h. A critical hardware failure has been detected on the circuit pack. Reset the circuit pack via the **busyout board PCSS** and **reset board PCSS** commands. If the Circuit Pack Restart Test (#594) passes, then the on-board circuitry is healthy. Retire the alarm via the **test board PCSS long clear** command. If the Circuit Pack Restart Test (#594) fails, replace the circuit pack.

The reported error types correspond to the following detected errors:

1293	On-board auxiliary processor insane
1294	Internal memory access error

i. These error types are reported when the following errors are detected:

1537 Frame overrun at Packet Bus interface. This condition may be caused by an on-board fault or by faulty data received on one of the circuit pack's external ports. If any of the ports on this circuit pack are alarmed, refer to the repair procedures for those maintenance objects.

1538 Circuit packet is hyperactive; that is, it is flooding the switch with messages sent over the control channel. The circuit pack is taken out-of-service when a threshold number of these errors is reported to the switch. Clear the alarm via the following commands: **busyout board PCSS**, **reset board PCSS**, **test board PCSS long clear**, **release board PCSS**. If the error recurs within 10 minutes, then replace the circuit pack.

j. These errors indicate that the circuit pack is having problems transmitting data to the Packet Bus.

1793 Parity errors are detected when transmitting data to the Packet Bus.

1794 Overflow of Packet Bus transmit buffers has occurred.

1795 Circuit pack cannot find end of frame when transmitting to Packet Bus. Clear the alarm via the following commands: **busyout board PCSS**, **reset board PCSS**, **test board PCSS long clear**, **release board PCSS**. If the error recurs within 10 minutes, then replace the circuit pack.

2306 This error occurs when the circuit pack detects an error in a received frame from the packet bus. These errors are most likely caused by a packet bus problem, but may be due to a circuit pack fault. An invalid Link Access Procedure Data (LAPD) frame error occurs if the frame contains a bad Cyclical Redundancy Checking (CRC), is greater than the maximum length, or violates the link level protocol. When bus parity errors are reported, the LANBIC Receive Parity Error Counter Test (#595) should be performed to determine if the condition had cleared.

k. A critical failure has been detected in the Packet Bus interface of the circuit pack. This failure may be due to either a Packet Bus fault or an on-board fault. The probability of this error being related to Packet bus problems increases with the number of ISDN-BRI circuit packs displaying this error.

If the Packet Bus is not alarmed, reset the circuit pack via the **busyout board PCSS** and **reset board PCSS** commands. If the Circuit Pack Restart Test (#594) passes, then the on-board circuitry is healthy. Retire the alarm via the **test board PCSS long clear** command. If the Circuit Pack Restart Test (#594) fails, replace the circuit pack. If the problem persists after complying with the above instructions, then follow normal escalation procedures.

l. These errors are not service-affecting. No action is required. These errors are reported by the circuit pack when it receives a bad control channel message from the switch. The auxiliary data identifies the following error events:

4096	Bad major heading
4097	Bad port number
4098	Bad data
4099	Bad sub-qualifier
4100	State inconsistency
4101	Inconsistent downlink message

m. This error is not service-affecting. No action is required.

3843	Bad translation RAM detected, but call continues by using another translation location.

n. Error type 3999— Indicates that the circuit pack sent a large number of control channel messages to the switch within a short period of time. If error type 1538 is also present, then the circuit pack was taken out-of-service due to hyperactivity. If error type 1538 is not present, then the circuit pack has not been taken out-of-service, but it has generated 50% of the messages necessary to be considered hyperactive. This may be completely normal during heavy traffic periods. However, if this error type is logged when the circuit pack is being lightly used, it may indicate a problem with the circuit pack or the equipment attached to it.

System Technician-Demanded Tests: Descriptions and Error Codes

Always investigate tests in the order presented in the following tables when inspecting errors in the system. By clearing error codes associated with the *Control Channel Loop Around Test,* for example, you may also clear errors generated from other tests in the testing sequence.

Order of Investigation	Short Test Sequence	Long Test Sequence	D/ND[1]
Control Channel Loop-Around Test (#52)	X	X	ND
NPE Audit Test (#50)		X	ND
LANBIC Receive Parity Error Counter Test (#595)		X	ND

1. D = Destructive; ND = Nondestructive

NPE Audit Test (#50)

Refer to the repair procedure described in the "XXX-BD (Common Port Circuit Pack)" Maintenance documentation as NPE Audit Test (#50).

Control Channel Loop Around Test (#52)

Refer to the repair procedure described in the "XXX-BD (Common Port Circuit Pack)" Maintenance documentation as Control Channel Loop Around Test (#52).

SAKI Sanity Test (#53)

Refer to the repair procedure described in the "XXX-BD (Common Port Circuit Pack)" Maintenance documentation as SAKI Sanity Test (#53).

LANBIC Receive Parity Error Counter Test (#595)

This test is destructive.

The test reads and clears the LANBIC Receive Parity Error Counter on the circuit pack. This counter is incremented by the circuit pack when it detects a parity error in data received from the Packet Bus.

These errors may be indicative of a circuit pack problem, Packet Bus problem, or a problem with another circuit pack on the bus. This test is useful for verifying the repair of the problem.

Table 3-35. TEST #595 LANBIC Receive Parity Error Counter Test

Error Code	Test Result	Description/ Recommendation
2000	ABORT	Response to the test was not received from the circuit pack within the allowable time period. 1. If the test aborts repeatedly a maximum of 5 times, reset the circuit pack via the **busyout board PCSS** and **reset board PCSS** commands. 2. If the test aborts again, replace the circuit pack.
2100	ABORT	Could not allocate the necessary system resources to run this test.
2012	ABORT	Internal system error 1. Retry the command at 1-minute intervals a maximum of 5 times.

Continued on next page

Table 3-35. TEST #595 LANBIC Receive Parity Error Counter Test — *Continued*

Error Code	Test Result	Description/ Recommendation
1-10	FAIL	The circuit pack is still detecting errors of this type. The error code indicates the value of the on-board error counter. 1. Retry the command at 1-minute intervals a maximum of 5 times. 2. If the test continues to fail, verify the validity of the Packet Bus. Run the Packet Bus maintenance test with the **test pkt P long** command. 3. If the Packet Bus test passes, check the validity of the circuit pack. Execute a test that involves data transmission onto the Packet Bus. For example, the BRI may use the connectivity tests of the port-level maintenance object (BRI-PORT) by executing the **test port PCSSpp** command. Refer to the repair procedures for the executed test if it fails. Otherwise, proceed to the next step. 4. Other circuit packs on the Packet Bus may be the cause of the parity error. Use the **display errors** command to check the Error Log for other circuit packs that are alarmed. If any alarms are present for the other circuit packs, retire those alarms also. Then, rerun the LANBIC Receive Parity Error Counter Test (#595) on this circuit pack.
	PASS	No errors detected by circuit pack.

BRI-DAT (ISDN-BRI)

MO Name (in Alarm Log)	Alarm Level	Initial Command to Run	Full Name of MO
BRI-DAT	WARNING[1]	test data-module	ISDN-BRI Standalone Data Module

1. The alarm level for ASAI adjuncts may be administered using the **set options** command. The alarm level can be set independently for Off-Board and On-Board alarms to WARNING, MINOR, or MAJOR for all ASAI adjuncts in the system.

Refer to "BRI-SET, ASAI-ADJ, BRI-DAT" Maintenance documentation.

BRI-PORT (ISDN-BRI Port), ABRI-PORT (ASAI ISDN-BRI Port)

MO Name (in Alarm Log)	Alarm Level	Initial Command to Run[1]	Full Name of MO
BRI-PORT	MINOR	test port PCSSpp l	ISDN-BRI Port
BRI-PORT	WARNING	test port PCSSpp sh	ISDN-BRI Port
ABRI-PORT	MAJOR[2,3]	test port PCSSpp l	ASAI ISDN-BRI Port
ABRI-PORT	WARNING[2,3]	test port PCSSpp l	ASAI ISDN-BRI Port
ATT-PORT	MAJOR[2, 3]	test port PCSSpp l	Lucent Adjunct ISDN-BRI Port
ATT-PORT	WARNING[2, 3]	test port PCSSpp l	Lucent Adjunct ISDN-BRI Port
LGATE-PORT	MAJOR[2, 3]	test port PCSSpp l	Ethernet ASAI Port
LGATE-PORT	WARNING[2, 3]	test port PCSSpp l	Ethernet ASAI Port
ATTE-PT	MAJOR[2, 3]	test port PCSSpp l	Ethernet Lucent Adjunct Port
ATTE-PT	WARNING[2, 3]	test port PCSSpp l	Ethernet Lucent Adjunct Port

1. Where P is the port network number (1 for PPN); C is the carrier designation (A, B, or C); and SS is the address of the slot in the carrier where the circuit pack is located (01, 02, ..., etc.); and pp is the 2-digit port number (for example, 01).
2. The alarm level for ASAI and Lucent adjunct ports may be administered using the **set options** command. The alarm level can be set independently for Off-Board and On-Board alarms to WARNING, MINOR, or MAJOR for all ASAI and Lucent adjunct ports in the system.
3. All alarming for an ASAI and Lucent adjunct and OFF-BOARD alarming for an ASAI or Lucent port is disabled if the ASAI or Lucent adjunct asks the switch to suspend maintenance. When this occurs, an error and a WARNING alarm is logged against the ASAI or Lucent adjunct. The Hardware Error and Alarm Logs should be checked to see if the adjunct has disabled alarming.

NOTE:
Some of the information in this section is reserved for future use.

WARNING:
If a significant Packet Bus failure occurs, errors and alarms may not be logged as expected for BRI-PORT/ABRI-PORT/ATT-PORT/LGATE-PT/ATTE-PT.

The TN2208 LGATE MFB provides DEFINITY with the interface to Adjunct-Switch Application Interface (ASAI) and Lucent adjuncts (for example, CONVERSANT®. Voice System). The circuit pack contains 12 ports of line circuit interface (although only 8 are usable by the switch), each of which operates with two B-channels (referred to as B1 and B2 throughout this section) and one D-channel as specified in the Lucent ISDN-BRI Specification. In this context, the term

"ISDN-BRI port" is used to refer collectively to ports on the TN2208 circuit pack which are connected to ASAI or Lucent adjuncts.

The TN556C and TN2198 ISDN-BRI Line circuit packs provide DEFINITY with the interface to ISDN-BRI end points, Adjunct-Switch Application Interface (ASAI) and Lucent adjuncts (for example, CONVERSANT®. Voice System). The circuit packs contain 12 ports of line circuit interface, each of which operates with two B-channels (referred to as B1 and B2 throughout this section) and one D-channel as specified in the Lucent ISDN-BRI Specification. In this context, the term "ISDN-BRI port" is used to refer collectively to ports on the TN556C and TN2198 circuit packs which are connected to either BRI endpoints or ASAI or Lucent adjuncts.

For BRI endpoints, each B-channel may support voice or circuit-switched data and may be circuit-switched simultaneously. The B-channels are not used on ports connected to ASAI or Lucent adjuncts. The D-channel is used for conveying signaling between the switch and a BRI endpoint(s) or ASAI or Lucent adjunct.

ISDN-BRI endpoints are available in various configurations. All endpoints require the D-channel to convey signaling information to the switch. Only one B-channel is required for a voice-only set or a stand-alone data module (BRI-DAT). A voice and data-capable set requires both B-channels (one for voice and one for data). Therefore, each TN556 or TN2198 port can support either two voice-only sets, two stand-alone data modules (BRI-DAT), or one voice and data-capable set. Only a single ASAI or Lucent adjunct may be connected to an ISDN-BRI port. Multiple adjuncts per line are not supported.

Figure 3-3 illustrates the physical connection (solid line) between an ISDN-BRI Port and its associated ISDN-BRI set(s). Each physical connection allows for two B-channels and one D-channel. Each ISDN-BRI circuit pack can support up to 12 of these *physical* connections to different voice and voice/data sets or ASAI or Lucent adjuncts. On a TN2198 each ISDN-BRI circuit pack can support up to 12 *physical* connections to a NT1, which, in turn, connects to 2 terminals.

This section covers the maintenance documentation for ISDN-BRI ports. Some of the results of maintenance testing of ISDN-BRI ports may be affected by the health of the ISDN-BRI Line circuit pack (BRI-BD), BRI endpoint (BRI-SET), or ASAI adjunct (ASAI-AJ/LGATE-AJ) or Lucent adjunct (ATT_AJ/ATTE-AJ). These interactions should be kept in mind when investigating the cause of ISDN-BRI port problems. For more information on the circuit pack and endpoints, refer to the BRI-BD (ISDN-BRI Line Circuit Pack) Maintenance documentation, the BRI-SET (ISDN-BRI Endpoint) Maintenance documentation, and ASAI-AJ (Adjunct-Switch Application Interface) Maintenance documentation, ATT-AJ (Lucent Adjunct) Maintenance documentation, LGATE-AJ (Ethernet Adjunct-Switch Application Interface) Maintenance documentation, and ATTE-AJ (Ethernet Lucent Adjunct) Maintenance documentation.

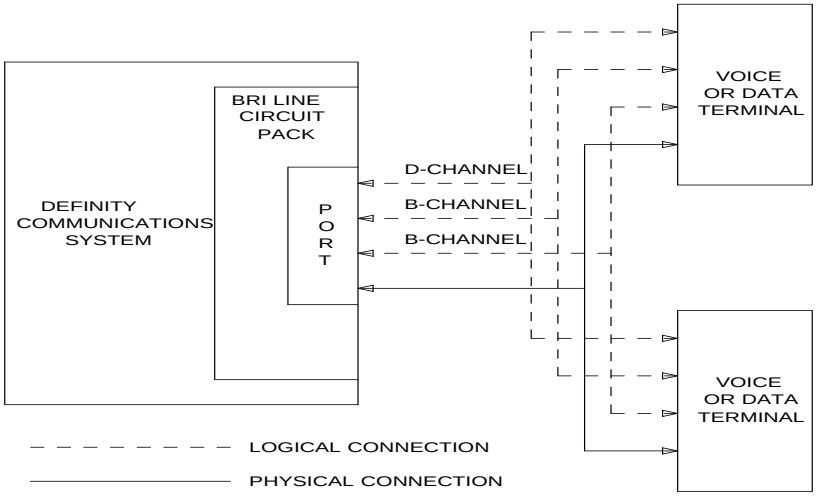

Figure 3-3. ISDN-BRI Port Interactions

Hardware Error Log Entries and Test to Clear Values

Table 3-36. ISDN-BRI Port Error Log Entries

Error Type	Aux Data	Associated Test	Alarm Level BRI-PORT	Alarm Level ABRI-PORT ATT-PORT LGATE-PORT ATTE-PT	On/ Off Board	Test to Clear Value
0[1]	0	Any	Any	Any	Any	test port PCSSpp sh r 1
1 (a)	(a)	Level 1 Status Inquiry (#621)	WRN	MAJ/MIN/ WRN[2]	OFF	test port PCSSpp sh r 2
18		busyout port PCSSpp	WRN		OFF	release port PCSSpp
130 (b)			WRN		ON	test port PCSS sh
257 (c)	(c)	EPF Inquiry (#622)	WRN	MAJ/MIN/ WRN[2]	OFF	test port PCSSpp sh r 1
513 (d)	(d)	none	(d)	(d)	ON	

Continued on next page

Table 3-36. ISDN-BRI Port Error Log Entries — *Continued*

Error Type	Aux Data	Associated Test	Alarm Level BRI-PORT	Alarm Level ABRI-PORT ATT-PORT LGATE-PORT ATTE-PT	On/ Off Board	Test to Clear Value
769 (e)	0	none	WRN	MAJ	OFF	
1281 (f)		NPE Crosstalk (#617)	MIN/ WRN[2]		ON	test port PCSSpp l r 2
1537 (g)	46210	CRC Error Counter (#623)	WRN	MAJ/MIN/ WRN[2]	OFF	
1793 (h)		BRI Port Local TDM	MIN/ WRN[2]		ON	test port PCSSpp l r 2
		Loop Around (#619)				
3841 (i)	46208	None				
3842 (j)	0	None				
3843 (k)	0	None				
3844 (l)	46223	None				
3845 (m)		None				
3846 (n)	TEI	None				
3847 (o)	0	None				

1. Run the Short Test Sequence first. If all tests pass, run the Long Test Sequence. Refer to the appropriate test description, and follow the recommended procedures.
2. Major and Minor alarms on this MO may be downgraded to Warning alarms based on the value used in the **set options** command.

Notes:

a. This error occurs when the Level 1 Status Inquiry fails or when the BRI circuit pack detects that Level 1 has been deactivated on the port. The aux data field contains one of the following values:

- blank - this indicates that the Level 1 Status Inquiry failed.
- 32773 - this is a message from the BRI-LINE circuit pack indicating Level 1 has been deactivated.

Refer to the repair procedures for Test #621.

b. This error type indicates that the circuit pack has been removed or has been insane for more than 11 minutes. To clear the error, replace or reinsert the circuit pack.

c. This error occurs when the EPF Status Inquiry fails due to an overcurrent condition or when the BRI-LINE circuit pack detects that the EPF is in an over current condition. The aux data field contains one of the following values:

   - blank - this indicates that the EPF Status Inquiry failed due to an overcurrent condition.
   - 40988 - this indicates that the BRI-LINE circuit pack has detected an overcurrent condition and has turned the EPF off.

   Execute the Short Test Sequence and see the repair procedures for Test #622.

d. This error indicates that the circuit pack is having problems transmitting data to the Packet Bus, thus affecting the conveyance of signaling information over the D-channel. With Aux Data 46222, this error occurs when the Packet Bus transmit buffers overflow. This condition probably indicates a hardware problem. The BRI-PORT Alarm Level for the error with Aux Data 46222 is "MIN/WRN," and the ABRI-PORT/ATT-PORT/LGATE-PT/ATTE-PT Alarm Level is "MAJ/MIN/WNR." With Aux Data 0, this error occurs whenever the Packet Bus transmit FIFO buffers overflow. This condition can be caused by an on-board hardware problem as well as by problems on the Packet Bus that disrupt the BRI circuit pack's ability to transmit data onto the Packet Bus. Use troubleshooting procedures for both on-board hardware problems and potential off-board Packet Bus problems. See the "PKT-BUS (Packet Bus)" Maintenance section in this chapter as well as Chapter 9, "Packet Bus Fault Isolation and Correction" for more details on Packet Bus troubleshooting procedures. The BRI-PORT Alarm Level for the error with Aux Data 0 is "MINOR," and the ABRI-PORT/ATT-PORT/LGATE-PT/ATTE-PT Alarm Level is "MAJOR."

e. This error occurs when the NPE Crosstalk Test (#617) fails. Run the Long Test Sequence, and pay particular attention to the results of Test #617.

f. This error occurs when broadcast signaling links associated with this port have too much link establishment related traffic. This could occur if an endpoint on this port is sending link establishment traffic on a port level broadcast link, or if there are Level 1 problems on the port. Check the error logs for Level 1 errors. If Level 1 problems exist, follow the repair procedures listed for test #621. Software will suspend activity to this port for 75 minutes when the port is alarmed due to this error (note that service suspension does not occur if the port is an ABRI-PORT/LGATE-PT/ATTE-PT/ATT-PORT). If this problem persists, replace the endpoint or endpoints associated with this port. If replacing the endpoints does not fix the problem, follow normal escalation procedures.

g. This error occurs when the port receives an invalid frame over the D-channel. When CRC errors exceed five within 15 minutes, the port is taken out of service for five seconds. If five more CRC errors are received within 15 minutes of the first set of five errors, the port is taken out of service for one minute. If five more CRC errors are received within 15 minutes of the last five, the port is taken out of service for 15 minutes.

   This error is most likely due to a problem with the wiring to the set or adjunct, interference on the wiring due to a noise source or no termination (an open circuit). It usually does not indicate a problem with the circuit pack.

   - Check the wiring to the endpoints or the adjunct.
   - If the problem persists, replace the endpoints or adjuncts.

h. This error occurs when the BRI Port Local TDM Loop Around Test (#619) fails. Run the Long Test Sequence, and pay particular attention to the results of Test #619.

   There are no Test to Clear Values for the following error types. The error types are simply provided as additional data that may prove useful while troubleshooting.

i. This error occurs when a Layer 1 Transmission error is detected for the port. Run the Long Test Sequence, and pay particular attention to the results of the Layer 1 Transmission Error Counter Test (#624).

j. A BRI port supports up to three Terminal Endpoint Identifiers (TEIs). This error occurs when the switch receives a request for a fourth TEI on a port. Check the number of endpoints administered for this port.

k. This error occurs when an SPID initialization request is made from an endpoint and the switch determines that the SPID value is invalid or is a duplicate of another SPID that is already initialized at Layer 3 on the port. Check the administration of the endpoints.

l. This error occurs when the circuit pack detects an overflow of its receive buffers. Run the Long Test Sequence, and pay particular attention to the results of the Receive First In First Out (FIFO) Overflow Error Counter Test (#625).

m. This error occurs when the BRI Port Local LAN Loop Around Test (#618) fails. Run the Long Test Sequence, and pay particular attention to the results of Test #618.

n. This error most likely occurs when the Terminal Endpoint Identifier (TEI) administered for the ASAI or Lucent endpoint does not match the TEI administered in the ASAI or Lucent adjunct. Check the switch administration of the TEI against that of the adjunct, and make sure that both are using the same TEI.

o. Indicates that sets on the port do not support Layer 3 initialization. Consult the Service Set documentation.

System Technician-Demanded Tests: Descriptions and Error Codes

Always investigate tests in the order presented in the following tables when inspecting errors in the system. By clearing error codes associated with the *NPE Crosstalk Test*, for example, you may also clear errors generated from other tests in the testing sequence.

Order of Investigation	Short Test Sequence	Long Test Sequence	D/ND[1]
NPE Crosstalk Test (#617)		X	D
BRI Port Local LAN Loop Around Test (#618)		X	D
BRI Port Local TDM Loop Around Test (#619)		X	D
Electronic Power Feed Restoral Test (#620)	X	X	ND
Level 1 Status Inquiry Test (#621)	X	X	ND
Electronic Power Feed Inquiry Test (#622)	X	X	ND
CRC Error Counter Test (#623)		X	ND
Layer 1 Transmission Error Counter Test (#624)		X	ND
Receive FIFO Overflow Error Counter Test (#625)		X	ND
Clear Error Counters (#270)	X	X	ND

1. D = Destructive; ND = Nondestructive

NOTE:
The NPE Crosstalk Test and the BRI Port Local TDM Loop Around Test are not executed for ABRI-PORT/ATT-PORT/LGATE-PT/ATTE-PT.

NPE Crosstalk Test (#617)

This test is destructive.

One or more NPEs reside on each circuit pack with a TDM Bus interface. The NPE controls port connectivity and gain and provides conferencing functions on a per-port basis. The NPE Crosstalk Test verifies that this port's NPE channel talks on the selected time slot and never crosses over to time slots reserved for other connections. If the NPE is not working correctly, one-way and noisy connections may be observed. This test is part of a port's Long Test Sequence and takes approximately 20 to 30 seconds to complete. Crosstalk testing is performed on both B-channels (B1 and B2) associated with a BRI port. If this test fails on either channel, any endpoints connected to the port are taken out-of-service.

This test is not executed for ABRI-PORT/ATT-PORT/LGATE-PT/ATTE-PT because the B-channels associated with the port are not used by ASAI or Lucent adjuncts.

Table 3-37. TEST #161 Loop Around Test

Error Code	Test Result	Description/ Recommendation
1000	ABORT	System resources required to run this test are not available. The port may be busy with a valid call. Use the **display port PCSSpp** command to determine the station extension or trunk group/member number of the port. Use the **status bri-port PCSSpp** command to determine the service state of the port. If the service state indicates that the port is in use, then the port is unavailable for certain tests. Wait until the port is idle before retesting. 1. If the port status is idle, then retry the command at 1-minute intervals a maximum of 5 times.
1004	ABORT	The port has been seized by a user for a valid call. Use the **status station** command for the station associated with this port and determine when the port is available for testing. 1. Retry the command at 1-minute intervals a maximum of 5 times.
1005	ABORT	This test is not valid for this type of translation. Ports administered as “ASAI” or “ADJK” can not run this test, because the B channels associated with the port are not used by ASAI or Lucent Adjunct Links. This is a normal condition.
2012	ABORT	Internal system error
2100	ABORT	Could not allocate the necessary resources to run this test. 1. Retry the command at 1-minute intervals a maximum of 5 times.
1, 2	FAIL	The NPE of the tested port was found to be transmitting in error. This causes noisy and unreliable connections. Error code 1 indicates that the NPE Crosstalk Test failed on Channel B1. Error code 2 indicates that the NPE Crosstalk Test failed on Channel B1. 1. Replace circuit pack.
	PASS	The port is correctly using its allocated time slots. 1. To be sure that this is not an intermittent problem, repeat this test a maximum of 10 times to make sure it continues to pass. 2. If complaints still exist, examine the station, connections, and wiring.

BRI Port Local LAN Loop Around Test (#618)

This test is destructive.

This test, which verifies the connectivity of a BRI port across the LAN Bus, executes only if the port is out-of-service. The test aborts if calls associated with

the port are in-progress. Failures of this test indicate either on-board faults associated with the BRI-PORT hardware on the circuit pack or problems with the LAN Bus, which is used to form connectivity between the switch and the BRI-PORT.

The dotted lines in Figure 3-4 show how a Loop Around Test is performed across the Packet Bus for the D-channel.

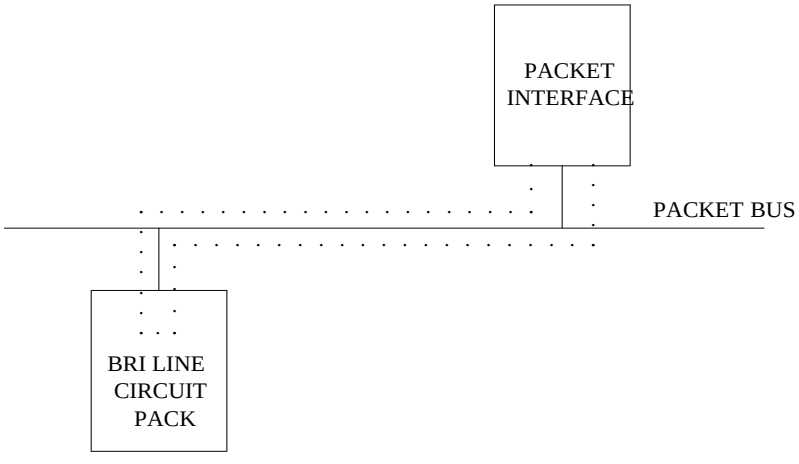

Figure 3-4. Path of the BRI Port Local LAN Loop Around

Table 3-38. TEST #618 BRI Port Local LAN Loop Around

Error Code	Test Result	Description/ Recommendation
1015	ABORT	The port is not in the out-of-service service state. 1. Display the BRI Port Status form via the **status bri-port PCSSpp** command to determine which stations or adjuncts are on this port. 2. Use the extension shown on this form in the **status station** command to determine if the station or adjunct is in use. 3. If it is in use, wait until it is idle, and then busyout the port (using the **busyout port PCSSpp** command) to place it in the out-of-service state and repeat this test. **WARNING:** *Since the "busyout" command is destructive, execution of this command prior to the port being idle causes all calls associated with BRI endpoints and all transactions associated with ASAI or Lucent adjuncts on the port to be torn down. Note that third party calls established by an ASAI or Lucent adjunct remain connected even though the port is taken out-of-service.*
1139	ABORT	The Packet Bus in the port network is out-of-service. 1. Follow the repair procedures for the Packet Bus. 2. After completing Step 1, execute the **test port long PCSSpp** command, and review the results of the BRI Port Local LAN Loop Around Test to verify the repair.
1141	ABORT	The PKT-CTRL is out-of-service. 1. Follow the repair procedures for the PKT-CTRL. 2. After completing Step 1, execute the **test port long PCSSpp** command, and review the results of the BRI Port Local LAN Loop Around Test to verify the repair.
1144	ABORT	The PPN Packet Bus is out-of-service. 1. Follow the repair procedures for the Packet Bus. 2. After completing Step 1, execute the **test port long PCSSpp** command, and review the results of the BRI Port Local LAN Loop Around Test to verify the repair.
2012	ABORT	Internal system error
2100	ABORT	Could not allocate the necessary system resources to run this test. 1. Retry the command at 1-minute intervals a maximum of 5 times.

Continued on next page

Table 3-38. TEST #618 BRI Port Local LAN Loop Around — *Continued*

Error Code	Test Result	Description/ Recommendation
	FAIL	The Loop Around Test has failed. 1. If the test fails repeatedly, attempt to reset the circuit pack if the other ports on the board are not in use. Reset the circuit pack by issuing the **busyout board PCSS** and the **reset board PCSS** commands. 2. If the test fails again, execute **test pkt P** on the G3MT terminal. If this fails, follow failure procedures in PKT-BUS section. 3. If tests executed in Step 2 pass, the problem is local to the BRI board. Replace the circuit pack.
	PASS	The BRI Port Local LAN Loop Around Test has passed.

BRI Port Local TDM Loop Around Test (#619)

This test is destructive.

This test verifies the connectivity of a BRI port across the TDM Bus. It aborts if calls associated with the port are in progress. Failure of this test indicates an on-board fault associated with the port hardware on the circuit pack.

This Loop Around Test runs a series of individual tests on the two B-channels (B1 and B2) associated with the port. It is a collection of the following:

- A Loop Around Test across the TDM Bus for B1.
- A Conference Circuit Test for B1.
- A Loop Around Test across the TDM Bus for B2.
- A Conference Circuit Test for B2.

The tests are run in the above order. If one fails, the remaining tests in the sequence are not executed. An error code is returned at that point.

This test is not executed for ABRI-PORT/ATT-PORT/LGATE-PT/ATTE-PT because the B-channels associated with the port are not used by ASAI or Lucent adjuncts.

The dotted lines in Figure 3-5 show how a Loop Around Test is performed for the B-channels. The figure shows a terminal connected to a BRI line board using a TN556. If a TN2198 is used, the terminal would be connected to a NT1, and the NT1 to the BRI board.

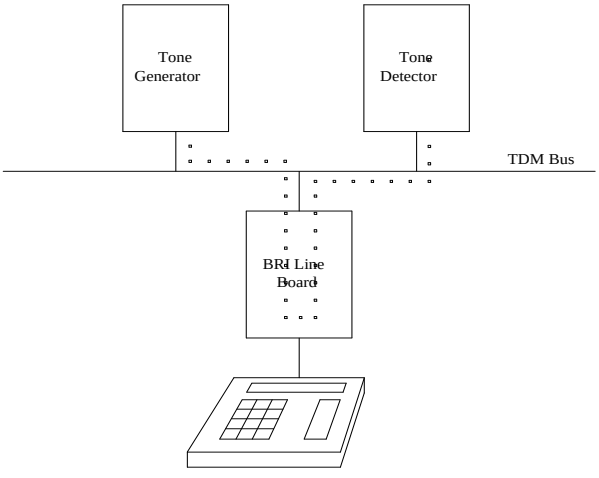

Figure 3-5. Path of the BRI Port Local TDM Loop Around

Table 3-39. TEST #619 BRI Port Local TDM Loop Around

Error Code	Test Result	Description/ Recommendation
1000	ABORT	The system resources required to run this test are not available. The port may be busy with a valid call. Use the **display port PCSSpp** command to determine the station extension or trunk group/member number of the port. Use the **status bri-port PCSSpp** command to determine the service state of the port. If the service state indicates that the port is in use, then the port is unavailable for certain tests. Wait until the port is idle before retesting. 1. If the port is idle, then retry the command at 1-minute intervals a maximum of 5 times.
1002	ABORT	The system could not allocate time slots for the test. The system may be under heavy traffic conditions or it may have time slots out-of-service due to TDM-BUS errors. Refer to TDM-BUS (TDM Bus) Maintenance documentation to diagnose any active TDM Bus errors. 1. If the system has no TDM-BUS errors and is not handling heavy traffic, repeat test at 1-minute intervals a maximum of 5 times.

Continued on next page

Table 3-39. TEST #619 BRI Port Local TDM Loop Around — *Continued*

Error Code	Test Result	Description/ Recommendation
1003	ABORT	The system could not allocate a tone receiver for the test. The system may be oversized for the number of Tone Detectors present or some Tone Detectors may be out-of-service. 1. Look for TTR-LEV errors in the Error Log. If present, refer to TTR-LEV (TTR Level) Maintenance documentation. 2. Look for TONE-PT errors in the Error Log. If present, refer to TONE-PT (Tone Generator) Maintenance documentation. 3. If neither condition exists, retry the test at 1-minute intervals a maximum of 5 times.
1004	ABORT	The port has been seized by a user for a valid call. Use the **status station** command for the station associated with this port and determine when the port is available for testing. 1. Retry the command at 1-minute intervals a maximum of 5 times.
1005	ABORT	This test is not valid for this type of translation. Ports administered as “ASAI” or “ADJK” can not run this test, because the B channels associated with the port are not used by ASAI or Lucent Adjunct Links. This is a normal condition.
2000	ABORT	Response to the test was not received from the BRI-LINE circuit pack within the allowable time period. 1. If this result occurs repeatedly, attempt to reset the circuit pack if the other ports are not in use. Reset the circuit pack by issuing the **busyout board PCSS** and the **reset board PCSS** commands. 2. If this result occurs again, replace the circuit pack.
2012	ABORT	Internal system error.
2100	ABORT	Could not allocate the necessary resources to run this test. 1. Retry the command at 1-minute intervals a maximum of 5 times.
2103	ABORT	The system could not make the conference connection for the test. 1. Retry the command at 1-minute intervals a maximum of 5 times.
1, 2	FAIL	As stated previously, this test runs a TDM Loop Around Test on each B-channel. This indicates that the loop around failed on one of the channels. Error Code 1 indicates that the TDM Loop Around Test failed on B1. Error Code 2 indicates that the TDM Loop Around Test failed on B2.

Continued on next page

Table 3-39. TEST #619 BRI Port Local TDM Loop Around — *Continued*

Error Code	Test Result	Description/ Recommendation
7, 8	FAIL	As stated previously, this test runs a Conference Circuit Test on each B-channel. A failure here indicates that one of these conference tests failed; Error Code 7 means that the test failed on B1; Error Code 8 means that the test failed on B2. 1. If the test fails repeatedly, attempt to reset the circuit pack if the other ports on the circuit pack are not in use. Reset the circuit pack by issuing the **busyout board PCSS** and the **reset board PCSS** commands. 2. If the test fails again, replace the circuit pack.
	PASS	The BRI Port Local TDM Loop Around Test has passed.

Electronic Power Feed Restoral Test (#620)

This test attempts to restore the Electronic Power Feed (EPF) on an ISDN-BRI port twice. In this test, the processor requests that the EPF be turned on for a given port. An attempt is made to turn on the power unit to the station or adjunct. If no current is being drawn by a station, this probably indicates that the station is not connected. No current being drawn by an adjunct is the normal condition. If an overcurrent condition is sensed (that is, too much current is being drawn), this condition may indicate a short in the wiring to the endpoint or adjunct. Depending on what condition is sensed, a message is returned stating that either the EPF was turned on successfully with no problems or that an overcurrent condition is sensed. This response is reported by the Electronic Power Feed Inquiry (#622), which follows in the testing sequence. EPF Restoral is attempted again by this test five seconds later. This test always passes for the TN2198 because it has no EPF. This test will always abort when run on the TN2208.

Table 3-40. TEST #620 Electronic Power Feed Restoral

Error Code	Test Result	Description / Recommendation
1005	ABORT	This test is not valid for this port type. The TN2208 does not have an electronic power feed, and the test will abort.
2012	ABORT	Internal system error. 1. Retry the command at 1-minute intervals a maximum of 5 times.
	PASS	The EPF Test passed. The message to turn on the power feed to the station or the adjunct was successfully sent to the port. 1. Although this test should not return a fail result, after running this test, the Error Log should be checked for any entries with error type 257 to examine the real results of this test. 2. An error type of 257 in the Error Log indicates some problem with the power to the station or the adjunct. Check for a short in the wiring, a damaged jack, a defective voice terminal or adjunct, or an incorrect type of terminal.

Level 1 Status Inquiry Test (#621)

This test determines the state of the transmission facility of a BRI port at the physical layer (that is, Level 1). Level 1 can be in one of three possible states: Activated, Pending Activation, or Deactivated.

The Activated state is the correct state for an ISDN-BRI port. In this state the Level 1 interface can communicate with the BRI endpoint or ASAI or Lucent adjunct administered on this port. This test passes if the state of Level 1 (L1) is Activated. This test also passes if software has taken this port out of service. See the description of the Level 1 "Deactivated State" below for more details.

The Pending Activation state indicates a problem with the endpoints or adjunct, the wiring to the sets or adjunct, or the BRI-LINE circuit pack. When in this state, the Level 1 interface is either not receiving any L1 framing from the endpoint or adjunct (Endpoint Idle), or it is communicating with the endpoint or adjunct but cannot transition to the Activated state (Endpoint Active).

The Deactivated state indicates a problem with the BRI-LINE circuit pack. When in this state, the Level 1 interface is idle and is not trying to communicate with the

BRI endpoints or adjunct. When an ISDN-BRI port is placed in the out-of-service state, Level 1 is also put into the Deactivated state. This could be due either to the system detecting a fault with the port or to a **busyout port PCSSpp** request.

Table 3-41. TEST #621 Level 1 Status Inquiry

Error Code	Test Result	Description/ Recommendation
1187	ABORT	The board, port or station may have been busied out by a technician. 1. Look in the Error Log for Error Type 18 (port busied out) for this port and BRI-BD (board busied out). If this error type is present for BRI-PORT only, then release the port via the **release port pp** command and run the test again. If the error is present for both BRI-BD and BRI-PORT, then release the board via the **release port PCSS** command and run the test again. **NOTE:** When you release a port, you release all ports associated with it. If certain ports still need to be busied out, use the **release port PCSSpp** command to busy them out. 2. Make sure the terminal is connected. 3. Retry the command at 1-minute intervals a maximum of 5 times.
2000	ABORT	Response to the test was not received from the circuit pack within the allowable time period. 1. If the test aborts repeatedly a maximum of 5 times, reset the circuit pack via the **busyout board PCSS** and **reset board PCSS** commands. 2. If the test aborts again, replace the circuit pack.
2012	ABORT	Internal system error.
2100	ABORT	Could not allocate the necessary system resources to run this test. 1. Retry the command at 1-minute intervals a maximum of 5 times.

Continued on next page

Table 3-41. TEST #621 Level 1 Status Inquiry — *Continued*

Error Code	Test Result	Description/ Recommendation
1	FAIL	Received a status of Level 1 Pending Activation-Endpoint Idle which indicates a problem with the BRI endpoint or ASAI or Lucent adjunct, the wiring to the endpoint or adjunct, or the ISDN-BRI port. For the TN2198, received a status of Level 1 Pending Activation. U interface down, which indicates a problem with a connection between the switch and the NT1. **NOTE:** An NT1 is a 2- to 4-wire converter that is used to connect 4-wire Lucent terminals to a 2-wire TN2198 circuit pack. The NT1 also has status lamps to determine the health of the unit. 1. For the TN556 or TN2208, verify that an endpoint is connected to the port. If an endpoint is connected to the port, then proceed to step 2. For the TN2198 verify that the connections are good between the switch and the NT1. Verify that the NT1 has power. 2. As necessary, check and repair the wiring between the circuit pack and the endpoint or adjunct. If a TN2198 is used, the set must have been plugged in for at least 15 seconds before it will stabilize. Execute the **test port PCSSpp** command, and review the results of the Level 1 Status Inquiry Test to verify the repair. If this test is still failing, proceed to Step 3. 3. For BRI endpoints, replace the BRI endpoint(s) connected to the port or the NT1 if a TN2198 is used. For ASAI or Lucent adjuncts, follow the recommended repair procedures of the manufacturer for link communication problems. For the NT1, follow the manufacturers repair procedures. Then execute the **test port PCSSpp** command and review the results of the Level 1 Status Inquiry Test to verify repair. If this test is still failing, proceed to Step 4.

Continued on next page

Table 3-41. TEST #621 Level 1 Status Inquiry — *Continued*

Error Code	Test Result	Description/ Recommendation
2	FAIL	For the TN556 or TN2208, received a status of Level 1 Pending Activation-Endpoint Active which indicates a problem with the BRI endpoint or ASAI or Lucent adjunct, the wiring to the endpoint or adjunct, or the ISDN-BRI port. For the TN2198, received a status of Level 1 Pending Activation. U interface up S/T interface down, which indicates a problem with the NT1 or the wiring between the NT1 and the BRI endpoint (S/T interface). 1. As necessary, check and repair the wiring between the circuit pack and the endpoint or adjunct. Execute the **test port PCSSpp** command, and review the results of the Level 1 Status Inquiry test to verify the repair. If this test is still failing, proceed to Step 2. 2. For BRI endpoints, try replacing the BRI endpoint(s) connected to the port. For ASAI or Lucent adjuncts, follow the recommended repair procedures of the manufacturer for link communication problems. For the NT1, follow the recommended repair procedures of the manufacturer. Then execute the **test port PCSSpp** command, and review the results of the Level 1 Status Inquiry test to verify repair.
3	FAIL	Received a status of Level 1 Deactivated; the port is out-of-service. 1. Issue the **status bri-port PCSSpp** command to verify that the service state of the port is out-of-service. If the service state of the port is not out-of-service, proceed to Step 2. 2. If the port has been placed out-of-service via the **busyout port PCSSpp** command, try releasing the port by executing the **release port PCSSpp** command. Then issue the **test port long PCSSpp** command, and review the results of Level 1 Status Inquiry test. If this test is still failing, proceed to Step 3. 3. After executing the **test port long PCSSpp** command, review the results of all the tests. Follow the repair procedures for any tests that fail. Verify repair of the problem by executing the **test port PCSSpp** command and by determining that the Level 1 Status test passes.
4	FAIL	For the TN2198 only: Received a status of Level 1 Pending Activation, the NT1 has a loss of power indicating a problem with the NT1. 1. For the NT1 follow the manufacturers recommended repair procedures. 2. Execute the **test port PCSSpp** command, and review the results of the Level 1 Status Inquiry test to verify the repair.
	PASS	This test indicates that Level 1 is activated, or that software has taken the port out of service.

Electronic Power Feed Inquiry (#622)

This test queries the BRI-LINE circuit pack for the status of the Electronic Power Feed (EPF) supplied to a BRI endpoint or an ASAI or Lucent adjunct. If the EPF is on and no overcurrent condition exists, this test passes. All other states are not normal and indicate a problem with the endpoint or adjunct, the wiring to the endpoint or adjunct, or the BRI-LINE circuit pack. This test is not run on the TN2208 circuit pack or the TN2198 and will always return a pass for a TN2198. The TN2208 has no power feeds.

Table 3-42. TEST #622 Electronic Power Feed Inquiry

Error Code	Test Result	Description/ Recommendation
1005	ABORT	This test is not valid for this port type. Ports on the TN2208 cannot run this test because this board does not have an electronic power feed.
2000	ABORT	Response to the test was not received from the circuit pack within the allowable time period. 1. If the test aborts repeatedly a maximum of 5 times, reset the circuit pack via the **busyout board PCSS** and **reset board PCSS** commands. 2. If the test aborts again, replace the circuit pack.
2012	ABORT	Internal system error.
2100	ABORT	Could not allocate the necessary system resources to run this test. 1. Retry the command at 1-minute intervals a maximum of 5 times.
1	FAIL	The BRI-LINE circuit pack reports that it has detected an overcurrent condition and has turned off the EPF. 1. As necessary, check and repair the wiring between the circuit pack and the endpoint or adjunct. Check the endpoints and replace one or both sets if the sets are drawing too much current. Execute the **test port PCSSpp** command and review the results of the EPF Inquiry Test to verify the repair. If this test is still failing, proceed to Step 2. 2. Execute the **test port PCSSpp** command, and review the results of the Level 1 Status Inquiry Test. If this test is also failing, then follow the repair procedure for the Level 1 Status Inquiry Test.
2000	ABORT	Response to the test was not received from the circuit pack within the allowable time period. 1. If the test aborts repeatedly a maximum of 5 times, reset the circuit pack via the **busyout board PCSS** and **reset board PCSS** commands. 2. If the test aborts again, replace the circuit pack.
	PASS	The Electronic Power Feed Inquiry Test reports that the EPF is on.

Layer 1 Transmission Error Counter Test (#624)

This test reads and clears the BRI port's Layer 1 Transmission error counter maintained on the BRI-LINE circuit pack. This counter is incremented by the circuit pack when it detects a Layer 1 transmission problem. The test passes if the value of the counter is 0 (that is, the error is cleared). If the counter is not zero, the test fails, and the value of the counter is displayed in the Error Code field.

This error is most likely due to a problem with the wiring or the endpoint or adjunct (verify that the wiring meets the configuration rules defined in *DEFINITY Communications System Generic 1 and Generic 3i Wiring*, 555-204-111). It does not indicate a problem with the ISDN-BRI circuit pack. This test is useful for verifying the repair of the problem.

Table 3-43. TEST #624 Layer 1 Transmission Error Counter Test

Error Code	Test Result	Description/ Recommendation
2000	ABORT	Response to the test was not received from the circuit pack within the allowable time period. 1. If the test aborts repeatedly a maximum of 5 times, reset the circuit pack via the **busyout board PCSS** and **reset board PCSS** commands. 2. If the test aborts again, replace the circuit pack.
2012	ABORT	Internal system error
2100	ABORT	Could not allocate necessary system resources to run test. 1. Retry the command at 1-minute intervals a maximum of 5 times.
value	FAIL	The BRI-LINE circuit pack is still detecting errors of this type. The Error Code field contains the value of this counter. 1. Retry the command at 1-minute intervals a maximum of 5 times. 2. If the test continues to fail, review the results of other tests in the Long Test Sequence. Pay particular attention to the results of the Level 1 Status Inquiry test. Follow repair procedures for any of the executed tests if they fail. Otherwise, go to the next step. 3. If the tests for the endpoints or adjunct pass and the Layer 1 Transmission Error Counter Test continues to fail, check the wiring to the endpoints or adjunct.
	PASS	The Layer 1 Transmission error counter was read correctly and has a value of 0.

Receive FIFO Overflow Error Counter Test (#625)

This test reads and clears the BRI port's Receive FIFO Overflow error counter maintained on the BRI-LINE circuit pack. This counter is incremented by the circuit pack when it detects an overflow of its receive buffers. The test passes if the value of the counter is 0 (that is, the error is cleared). If the counter is non-zero, the test fails, and the value of the counter is displayed in the Error Code field.

This error can occur if signaling frames are being received from the Packet Bus at a rate sufficient to overflow the receive buffers on the circuit pack for a port OR if a hardware fault is causing the receive buffers not to be emptied properly by the circuit pack. This test is useful for verifying the repair of the problem.

Table 3-44. TEST #625 Receive FIFO Overflow Error Counter Test

Error Code	Test Result	Description/ Recommendation
2000	ABORT	Response to the test was not received from the circuit pack within the allowable time period. 1. If the test aborts repeatedly a maximum of 5 times, reset the circuit pack via the **busyout board PCSS** and **reset board PCSS** commands. 2. If the test aborts again, replace the circuit pack.
2012	ABORT	Internal system error
2100	ABORT	Could not allocate the necessary system resources to run this test. 1. Retry the command at 1-minute intervals a maximum of 5 times.
value	FAIL	The BRI-LINE circuit pack is still detecting errors of this type. The Error Code field contains the value of this counter. 1. Retry the command at 1-minute intervals a maximum of 5 times. 2. If the test continues to fail, run the Long Test Sequence and pay particular attention to the Loop Around Tests (#618 and #619). See the repair procedures for the executed test if it fails. Otherwise, go to the next step. 3. Replace the circuit pack.
	PASS	The Receive FIFO Overflow error counter was read correctly and has a value of 0.

Clear Error Counters Test (#270)

This test is not an actual test in the strict sense of the word. There are various error counters associated with each BRI-PORT/ABRI-PORT/ATT-PORT/LGATE-PT/ATTE-PT. This test clears those counters and triggers the auditing of Terminal Endpoint Identifier (TEI) values and layer 3 reinitialization. This test is used only to send messages to the BRI-PORT/ABRI-PORT/ATT-PORT/LGATE-PT/ATTE-PT and, therefore, should neither abort nor fail.

Table 3-45. TEST #270 Clear Error Counters

Error Code	Test Result	Description/ Recommendation
Any	ABORT	This test should never abort.
Any	FAIL	This test should never fail. 1. Retry the command at 1-minute intervals a maximum of 5 times.
	PASS	The message to clear the error counters of the BRI-Port/ABRI-Port/ATT-PORT/LGATE-PT/ATTE-PT has been sent.

BRI-SET, ASAI-ADJ, BRI-DAT

MO Name (in Alarm Log)	Alarm Level	Initial Command to Run[1]	Full Name of MO
BRI-SET	WARNING[2]	test station extension l, test data-module extension	ISDN-BRI Set
ASAI-ADJ	MAJOR[2]	test station extension	ASAI-Adjunct
ASAI-ADJ	MAJOR[2]	test data-module extension	ASAI-Adjunct
ASAI-ADJ	WARNING[3]	test data-module extension	ASAI-Adjunct
ATT-ADJ	MAJOR[2]	test station extension	Lucent-Adjunct
ATT-ADJ	MAJOR[2]	test station extension	Lucent-Adjunct
ATT-ADJ	WARNING[3]	test station extension	Lucent-Adjunct
LGATE-AJ	MAJOR[2]	test station extension	Ethernet ASAI-Adjunct
LGATE-AJ	MAJOR[2]	test station extension	Ethernet ASAI-Adjunct
LGATE-AJ	WARNING[3]	test station extension	Ethernet ASAI-Adjunct
ATTE-AJ	MAJOR[2]	test station extension	Ethernet Lucent-Adjunct
ATTE-AJ	MAJOR[2]	test station extension	Ethernet Lucent-Adjunct
ATTE-AJ	WARNING[3]	test station extension	Ethernet Lucent-Adjunct
BRI-DAT		test data-module	

1. Where P is the port network number (1 for PPN); C is the carrier designation (A, B, or C); SS is the address of the slot in the carrier where the circuit pack is located (01, 02, ..., etc.); and pp is the 2-digit port number (for example, 01). The alternate name field contains the extension of the endpoint. This field is used to distinguish between endpoints on the same port.
2. The alarm level for ASAI and Lucent adjuncts may be administered using the **set options** command. The alarm level can be set independently for Off-Board and On-Board alarms to WARNING, MINOR, or MAJOR for all ASAI and Lucent adjuncts in the system.
3. Alarming for an ASAI and Lucent adjuncts is disabled if the adjunct asks the switch to suspend maintenance. When this occurs, an error and a WARNING alarm are logged against the endpoint. Busying out and releasing the ASAI station or ADJLK station will clear the alarm.

The TN2208 ESAI MFB provides DEFINITY with an Ethernet interface to Adjunct-Switch Application Interface (ASAI) and Lucent adjuncts (for example, CONVERSANT® Voice System). This circuit pack contains 8 ports of line circuit interface, each of which operates with two B-channels (referred to as B1 and B2 throughout this section) and one D-channel as specified in the Lucent ISDN-BRI Specification. In this context, the term ‘‘ISDN-BRI port’’ is used to refer collectively to ports on the TN2208 MFB circuit pack which is connected to ASAI

or Lucent adjuncts. The TN2208 ESAI MFB is handled by switch software as it is an ISDN BRI compatible board and all maintenance actions referring to ASAI and Lucent Adjunct Links in this section apply.

ISDN-BRI endpoints come in a number of configurations. All endpoints require the D-channel to convey signaling information to the switch. A voice-only set requires only one B-channel. A voice and data-capable set requires both B-channels (one for voice and one for data). Therefore, each TN556 port can support either two voice-only sets or one voice and data-capable set. Only a single ASAI or Lucent adjunct may be connected to an ISDN-BRI port. Multiple adjuncts per line are not supported.

Figure 3-6 illustrates the physical connection (solid line) between an ISDN-BRI Circuit Pack and a voice or voice/data set. Each physical connection allows for two B-channels, as stated above, plus one D-channel. Each ISDN-BRI circuit pack can support up to 12 of these PHYSICAL connections to different voice and voice/data sets or ASAI and Lucent adjuncts.

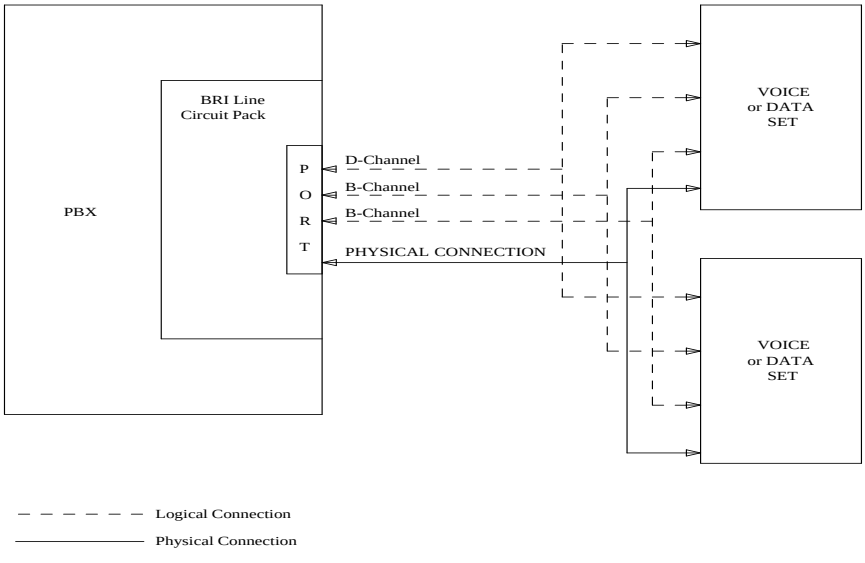

Figure 3-6. ISDN-BRI Set Interactions

This section contains the ISDN-BRI Set, ASAI Adjunct, and Lucent Adjunct Maintenance documentation. Some of the results of maintenance testing of the ISDN-BRI Set or the ASAI and Lucent Adjunct may be affected by the health of the ISDN-BRI circuit pack and Port. These interactions should be kept in mind when investigating the cause of ISDN-BRI Set problems.

Hardware Error Log Entries and Test to Clear Values

Table 3-46. BRI-SET/ASAI-ADJ Error Log Entries

Error Type	Aux Data	Associated Test	Alarm Level BRI-PORT	Alarm Level ABRI-PORT ATT-PORT LGATE-PORT ATTE-PT	On/ Off Board	Test to Clear Value
0[1]	0	Any	Any	Any	Any	test BRI-SET or ASAI-ADJ ATT-ADJ LGATE-AJ ATTE-AJ
2(a)	2-102	None				
18	0	busyout station ext	WARNING	MAJOR/ WARNING[2]	OFF	release station <ext>
130(b)			WARNING		ON	test port PCSS sh
257(c)	Any	BRI Layer 3 Query (#629)	WARNING	MAJOR/ WARNING[2]	OFF	test station ext r 2 test data-module ext r 2
351(d)	0	None		WARNING	OFF	busyout and release station
513(e)	0	None				
769(f)	0	None	WARNING	MAJOR	OFF	
2561(g)	0	None				
2562-2566(h)	0	None				
2567(o)	0	None				
2568(p)	0	None				
2817(i)	0	XID Test (#628)	WARNING	MAJOR/ WARNING[2]	OFF	test station ext r 2 test data-module ext r 2

Continued on next page

Table 3-46. BRI-SET/ASAI-ADJ Error Log Entries — *Continued*

Error Type	Aux Data	Associated Test	Alarm Level BRI-PORT	Alarm Level ABRI-PORT ATT-PORT LGATE-PORT ATTE-PT	On/ Off Board	Test to Clear Value
3073(j)	0	BRI Remote Loop Back (#627)	WARNING		OFF	test station ext l r 2 test data-module ext l r 2
3329(k)	Any	Signaling Link Status (626)	WARNING	MAJOR/ WARNING[2]	OFF	†
3584	0, 1	None				
3585-3839(i)	0	None				
3840-4095(m)(n)	0	None				

1. Run the Short Test Sequence first. If all tests pass, run the Long Test Sequence. Refer to the appropriate test description and follow the recommended procedures.
2. Major alarms on this MO may be downgraded to Warning alarms based on the value used in the **set options** command.

Notes:

a. Errors of this type indicate violations of the ISDN-BRI signaling protocol; timers associated with certain Layer 3 messages have expired before a required response was received. In the following table, the aux data field indicates which timer has just expired. (For more information, refer to the Lucent ISDN-BRI Specification.)

Table 3-47. Error Type 2 Cause Values

Aux Data	Timer Type
2	First T303 (SETUP timer)
3	Second T303 (SETUP timer)
4	T305 (DISConnect timer)

Continued on next page

Table 3-47. Error Type 2 Cause Values — *Continued*

Aux Data	Timer Type
5	First T308 (RELease timer)
6	Second T308 (RELease timer)
10	T316 (RESTart timer)
12	T309 (Layer 2 Failure timer)
16	TM100 (Management Information Message timer 1)
17	TM200 (Management Information Message timer 2)
102	TASAI (ASAI Routing Timer)

The switch sent a message to the endpoint which did not respond in the allotted time. This can happen occasionally due to failure of the point-to-point signaling link or because of a problem in the BRI endpoint or ASAI adjunct or Lucent adjunct. Execute the **test station extension sh** command and pay particular attention to the results of the BRI Layer 3 Query Test (#629). If this test fails, follow the repair procedure for Test #629.

b. This error type indicates that the circuit pack has been removed or has been insane for more than 11 minutes. To clear the error, replace or reinsert the circuit pack.

c. This error occurs when the endpoint does not respond to the service state query message sent to the adjunct or the endpoint. This error causes an alarm to be raised. The alarm is retired when the switch receives a response to the service state query to the endpoint or the adjunct.

   For BRI endpoints, the Aux Data field for this error contains "0." When it occurs, execute the **test station *<extension>* sh** command and pay particular attention to the results of the BRI Layer 3 Query Test (#629). If this test fails, follow the repair procedure for Test #629.

   When this error occurs for an ASAI or Lucent adjunct, the Aux Data field indicates the state of the ASAI link or Lucent link and whether an invalid response or no response was received to the query from the switch, as shown in Table 3-48:

Table 3-48. ASAI Link State

Aux Data	ASAI Link State	Error
102	13-restarting	No response to RESTART message
104	13-restarting	Invalid response to RESTART message
152	13-restarted	No response to Layer 3 query
154	13-restarted	Invalid response to Layer 3 query
202	13-established	No response to Layer 3 query
204	13-established	Invalid response to Layer 3 query

(See "status bri-port" in Chapter 2, "Maintenance Commands for R6csi" for an explanation of the ASAI link states.)

For ASAI or Lucent adjuncts, the switch automatically queries the adjunct every two minutes (and therefore the Layer 3 Query Test is not executed for ASAI or Lucent adjuncts via a command issued from the G3MT terminal). While alarmed for this error, the switch momentarily (for five seconds) takes the associated port out-of-service every 15 minutes. This action is taken in an attempt to stimulate recovery actions to be taken by the adjunct.

When this error occurs for an ASAI or Lucent adjunct, the service technician should:

1. Execute the **test station extension** command, paying particular attention to any tests which fail, and perform the associated repair procedures for those tests.
2. Check the health of the adjunct by following the recommended repair procedures of the manufacturer of the adjunct if the preceding step does not resolve the problem.
3. The alarm condition persists and, if the above steps do not resolve the problem, follow normal escalation procedures.

d. This error and associated WARNING alarm are logged against an ASAI or Lucent endpoint when the adjunct has asked the switch to suspend Maintenance on the ASAI or Lucent endpoint. Busying out and releasing the ASAI station or ADJLK station will clear this alarm.

e. This error occurs when the endpoint sends more messages than the switch can handle. The switch suspends the reception of messages from the endpoint for a short period of time. There is no repair procedure for this error. If the condition persists, replace the endpoint.

f. This error occurs when the signaling link associated with a BRI endpoint has too much link establishment related traffic. This could occur if the signaling link is bouncing between assigned and established states. Software will suspend activity to this endpoint for 75 minutes when the endpoint is alarmed due to this problem (note that service suspension does not occur if the endpoint is an ASAI or Lucent adjunct). If this problem persists, replace the endpoint. If replacing the endpoint does not fix the problem, follow normal escalation procedures.

g. This error occurs when the ASAI-ADJ or ATT-ADJ or LGATE-AJ or ATTE-AJ message is not transmitted because the PKT-CTRL (Packet Control Circuit Pack) transmit buffers are exhausted. Frequent or persistent occurrence of these events may indicate a hardware problem or traffic overload on the PKT-CTRL, the signaling link, or the ASAI or Lucent adjunct. Attempt to resolve the problem by following the repair procedures for the PKT-CTRL. If these attempts fail, the problem should be escalated because re-engineering of the traffic on the PKT-CTRL, signaling link, or adjunct may be necessary.

h. This error occurs when the ASAI message is not transmitted because the transmit buffer for the ASAI link is full, causing the link to be flow controlled. Frequent or persistent occurrence of these events may indicate a hardware problem or traffic overload on the PKT-CTRL, the signaling link, or the ASAI or Lucent adjunct. Attempt to resolve the problem by following the repair procedures issued by the manufacturer of the adjunct. If these attempts fail, the problem should be escalated because re-engineering of the traffic on the PKT-CTRL, signaling link, or adjunct may be necessary.

i. This error indicates a problem with Layer 2 over the D-channel between the switch and the endpoint. When this error occurs, an alarm is raised against the station or adjunct. Execute the **test station extension short** command and pay particular attention to the results of the BRI XID Test (#628). If this test fails, follow the repair procedure for Test #628.

j. This error indicates a problem with the B-channel connection between the switch and the endpoint. When this error occurs, a warning alarm is raised against the endpoint. Execute the **test station *<extension>* long** command, and pay particular attention to the results of the BRI Remote Loop Back Test (#627). If this test fails, follow the repair procedure for Test #627.

k. This error occurs whenever the point-to-point signaling link to the endpoint goes down (except when it goes down because either the PKT-CTRL or the PKT-BUS has failed or has been busied out by system technician). When this error occurs, an alarm is raised against the endpoint or adjunct. Execute the **test station *<extension>* short** command and pay particular attention to the results of the Signaling Link Status Test (#626). If this test fails, follow the repair procedure for Test #626. The alarm is retired when the signaling link is reestablished to the endpoint or adjunct.

l. Certain ASAI protocol-specific cause codes are logged by switch software. The cause code can be determined from the following formula:

If the error type is greater than 3712, then the ASAI cause code is equal to the error type minus 3712. This code was sent to the adjunct by the switch.

If the error type is less than 3712, then the ASAI cause code is equal to the error type minus 3584. This code was sent to the switch by the adjunct.

A description of the various ASAI cause values is contained in the Table 10-64. This table also contains recommended system technician actions associated with the cause value. Further information can also be found in the Lucent ASAI Specification (288-500-03). In addition, the Aux Data field of the Error Log entry contains additional diagnostic information.

Table 3-49. ASAI Cause Values

Code	Explanation	Recommendation
	Service or Option Not Available	
0	Unrecognized ASAIProtocol Operation	Requested ASAI protocol operation is not implemented by the switch or adjunct. Aux Data field of Error Log entry contains protocol identifier for unrecognized operation. 1. Consult switch and adjunct documentation to determine which set of operations is supported by the switch and the adjunct. Adjunct administration turning off operations not implemented by the switch may resolve the problem.
40	Resources not available	No available internal resources to service switch or adjunct request. System transaction capacity for adjunct or switch is exceeded. 1. Re-engineering of adjunct services my be required.

Continued on next page

Table 3-49. ASAI Cause Values — *Continued*

Code	Explanation	Recommendation
63	Service or Option Not Available	Requested ASAI capability or resource is not available on the switch or adjunct. More than one adjunct may be contending for the same switch resources. Potential administration mismatch between the resource domains administered on the switch and those administered on the adjunct. 1. Verify that no overlapping administration of switch resources (for example, requesting notifications on a single domain by multiple adjuncts or multiple adjuncts attempting to control a single call) exists across all adjuncts connected to the switch. If overlaps exist, then readminister the adjuncts to guarantee that each adjunct is associated with a unique set of switch resources.
	Service or Option Not Implemented	
79	Service or Option Not Implemented	Requested service or option (or combination of selected options) is not supported (implemented) in switch or the adjunct. 1. Consult switch and adjunct documentation to determine ASAI service and options supported by both switch and adjunct. Readministration of the switch-administered capabilities (see Customer Optional Feature Form) or those of the adjunct may be necessary to correct the problem.
	Switch Error Conditions	
87	Internal Switch Audit	There is an inconsistency in switch data records. 1. There is no action needed since the switch has corrected the data inconsistency. 2. If a number of these errors continue to occur, then escalate to next tier.

m. Certain ISDN-BRI cause codes are logged by switch software. The cause code can be determined from the following formula:

If the error type is greater than 3968, then the ISDN-BRI cause code is equal to the error type minus 3968. This code was sent to the endpoint by the switch.

If the error type is less than 3968, then the ISDN-BRI cause code is equal to the error type minus 3840. This code was sent to the switch by the endpoint.

A description of the various ISDN-BRI cause values is contained in Table 10-65. This table also contains recommended system technician actions associated with the cause value. Further information can also be found in the Lucent ISDN-BRI Specification (801-802-100). In addition, the Aux Data field of the Error Log entry contains additional diagnostic information.

n. Error 3847 indicates that sets on the port do not support level 3 initialization. Consult the Set Service documentation

o. For the Error 2567 indicates that the version of ASAI is not supported, check version of the software running on the ASAI or Lucent adjunct.

p. For Error 2568 indicates that the adjunct id is invalid, check the vender id or software running on the Lucent adjunct.

Table 3-50. ISDN-BRI Cause Values

Code	Explanation	Recommendation
1	Channel in use	Requested channel is in use by another station on the BRI-PORT. (Not applicable for ASAI or Lucent adjuncts.) For BRI endpoints: 1. Try to originate a call to or from this port. 2. If the error persists, busy out and release the port. 3. If the problem still persists, replace stations on the port.

Continued on next page

Table 3-50. ISDN-BRI Cause Values — *Continued*

Code	Explanation	Recommendation
	Switch resources not available	
34	No circuit or channel available	A resource on the switch is unavailable for a call. For BRI endpoints: This cause value is not logged. For ASAI or Lucent Adjuncts: This condition means that there are no available trunks for an outgoing call request. 1. Verify that the adjunct is administered to support the trunk capabilities of the switch. 2. Investigate trunk group status by issuing **status trunk** commands from the SAT or by requesting a trunk group query or queries from the adjunct. 3. Perform trunk diagnostic procedures outlined in this manual.
42	Switch Equipment Congestion	Switch takes control to limit received traffic. For BRI endpoints: This cause value is not logged. For ASAI or Lucent Adjuncts: 1. See CallVisor protocol reference manual.

Continued on next page

Table 3-50. ISDN-BRI Cause Values — *Continued*

Code	Explanation	Recommendation
	Service or Option Not Available	
50	Requested Facility Not Subscribed	Requested facility is implemented, but not administered. Potential administration problem with endpoint or adjunct. For BRI endpoints: 1. Verify the switch administration of endpoint using either the **display station** or **display data-module** commands. 2. If Step 1 does not resolve the problem, refer to the endpoint's service manual and verify administration on the endpoint. For ASAI adjuncts: 1. Display the Customer Optional Features Form (administration screen) on the switch to determine which ASAI capabilities are turned on in the switch. 2. Verify that the adjunct is administered to support the identical capabilities as the switch. If there is a mismatch in the administered capabilities, then readminister the switch and/or the adjunct to establish a consistent set of desired capabilities on both the switch and the adjunct. For Lucent adjuncts: 1. Display the Customer Optional Features Form (administration screen) on the switch to determine if the adjunct is set enabled on in the switch. 2. If error type 2567 or 2568, verify the adjunct version, and readminister if needed.
58	Bearer Capability Not Presently Available	Requested bearer capability is implemented, but not administered. No B-channel administered. See recommendation 50 above.
	Service or Option Not Implemented	
65	Bearer Service Not Implemented	Requested service not implemented in switch or endpoint.

Continued on next page

Table 3-50. ISDN-BRI Cause Values — *Continued*

Code	Explanation	Recommendation
69	Requested Facility Not Implemented	Requested service not supported in switch or endpoint. 1. Consult switch and endpoint documentation to determine service support.
	Adjunct switch error conditions	
81	Invalid CRV	An invalid CRV was sent by the adjunct. 1. This may indicate a CRV inconsistency between the switch and the adjunct. See the CallVisor protocol reference manual.

System Technician-Demanded Tests: Descriptions and Error Codes

When inspecting errors in the system and deciding which ones to address, always investigate errors associated with the circuit pack and port first. Clearing these error codes first may also clear errors generated against the endpoint. When all circuit pack and port errors have been cleared, and errors still exist against the endpoint, always investigate errors in the order they are presented in the table below. By clearing error codes associated with the *Signaling Link Status Test,* for example, you may also clear errors generated from other tests in the testing sequence.

Table 3-51. System Technician-Demanded Tests: BRI-SET

Order of Investigation	Short Test Sequence	Long Test Sequence	D/ND[1]
Signaling Link Status Test (#626)	X	X	ND
BRI XID Test (#628)	X	X	ND
BRI Layer 3 Query (#629)	X (a)	X (a)	ND
BRI Remote Loop Back (#627)		X (a)	ND
BRI Set Audits (#630)	X (a)	X (a)	ND
BRI Vendor ID Test (#631)		X (a)	ND

Continued on next page

Table 3-51. System Technician-Demanded Tests: BRI-SET — *Continued*

Order of Investigation	Short Test Sequence	Long Test Sequence	D/ND[1]
BRI Model/Vintage ID Test (#632)		X (a)	ND

1. D = Destructive, ND = Non-destructive

Note:

a. Execute the **test port long PCSSpp** command and review the results of the BRI Port Local LAN Loop Around Test to verify the repair.

Signaling Link Status Test (#626)

This test determines the current status of the signaling link. This test passes if the link is "bound" to an endpoint and fails if the link is "not bound."

The definition of the term "bound" for a link depends upon the type of endpoint and may depend on the successful completion of procedures at both Layers 2 and 3 of the protocol. The definition of "bound" for each type of endpoint is as follows:

- **BRI endpoints administered for MIM (management information messages) initialization (multipoint):**

  NOTE:
  An MIM is a level 3 message that conveys management and maintenance information between a communications system and a BRI terminal.

  For endpoints of this type, the signaling link is "bound" when the link is connected at Layer 2 and the link has been associated with an endpoint, [that is, the endpoint has completed SPID initialization (L3 established)].

- **ASAI adjuncts and BRI endpoints not administered for MIM initialization (point-to-point):**

  For endpoints of this type, the signaling link is "bound" when the link is connected at Layer 2 (L2 established).

For all endpoint types, a signaling link becomes "unbound" when it is disconnected at Layer 2. For BRI endpoints supporting MIM initialization, a signaling link may also become "unbound" if a subsequent attempt to perform

SPID initialization on a "bound" link fails, (that is, wrong SPID is entered into the endpoint by the user).

Table 3-52. TEST #626 Signaling Link Status Test

Error Code	Test Result	Description/ Recommendation
1139	ABORT	The Packet Bus in the port network is out-of-service. 1. Follow the repair procedures for the Packet Bus. 2. After completing Step 1, execute the **test port long PCSSpp** command, and review the results of the BRI Port Local LAN Loop Around Test to verify the repair.
1141	ABORT	The PKT-CTRL is out-of-service. 1. Refer to PKT-CTRL (Packet Control Circuit Pack) Maintenance documentation.
1144	ABORT	The PPN Packet Bus is out-of-service. 1. Follow the repair procedures for the Packet Bus in the PPN. 2. After completing Step 1, execute the **test port long PCSSpp** command, and review the results of the BRI Port Local LAN Loop Around Test to verify the repair.

Continued on next page

Table 3-52. TEST #626 Signaling Link Status Test — *Continued*

Error Code	Test Result	Description/ Recommendation
1187	ABORT	The circuit pack, port or station may have been busied out by a technician. 1. Look in the Error Log for Error Type 18 (busied out) for BRI-BD, BRI-PORT, or BRI-SET. 2. If this error type is present for BRI-SET only, then release the station via the **release station** command. a. If this error type is present for BRI-PORT and BRI-SET, then release the port via the **release port PCSSpp** command and run the test again. b. If the error is present for BRI-BD, BRI-PORT, and BRI-SET, then release the circuit pack via the **release port PCSSpp** command and run the test again. If the error is present for BRI-SET only, then release the circuit pack via the **release port PPCSS** command and run the test again. If the error is present for both BRI-BD and BRI-PORT, then release the circuit pack via the **release board PPCSS** command and run the test again. **NOTE:** When you release the circuit pack, you release all ports associated with it. If certain ports still need to be busied out, use the **release port PCSSpp** command to busy them out. 3. Make sure the terminal is connected. 4. Retry the command at 1-minute intervals a maximum of 5 times.
2012	ABORT	Internal system error
2100	ABORT	Could not allocate the necessary system resources to run this test. 1. Retry the command at 1-minute intervals a maximum of 5 times.

Continued on next page

Table 3-52. TEST #626 Signaling Link Status Test — *Continued*

Error Code	Test Result	Description/ Recommendation
1113	FAIL	The signaling link is not "bound" to the adjunct or endpoint. For BRI endpoints supporting MIM initialization, this error indicates that the endpoint has not been bound to a signaling link (that is, SPID initialization has not been completed). Since the signaling link associated with the endpoint is not identified until SPID initialization completes, this error does not imply that the signaling link is connected or disconnected at Layer 2 nor does it provide the status of TEI assignment for the endpoint. For ASAI adjuncts and BRI endpoints not supporting MIM initialization, this error indicates that the link is disconnected at Layer 2. Since the signaling link associated with the endpoint has been identified via administration, the link is only "unbound" from the endpoint when it is disconnected. 1. Execute the **status bri-port PCSSpp** command and refer to the associated procedures for this command contained in the BRI-PORT (ISDN-BRI Port) Maintenance documentation.
	PASS	The signaling link is connected at Layer 2 and "bound" to the BRI endpoint or ASAI adjunct.

BRI Remote Loop Back Test (#627)

This test checks the integrity of a circuit switched B-channel connection between the switch and the endpoint.

In this test, the endpoint is put in the "maintenance busy" state to prevent the switch from issuing calls to the endpoint during the test. An application message containing a loop back activate request for the appropriate B-channel is sent to the endpoint. The endpoint responds with a loop back activated response. Maintenance then sends data to the endpoint over the B-channel under test. Since the B-channel is looped back at the endpoint, maintenance should receive the data that it sent. If no data is detected, the test fails. An application message containing a loop back deactivate request is then sent to the endpoint to terminate the remote loop back test. The endpoint responds with an MIM message containing a loop back deactivate response. Maintenance then releases the endpoint so that it is available to terminate calls.

This test is not executed for ASAI adjuncts because adjuncts do not support MIMs upon which this test is based.

Table 3-53. TEST #627 BRI Remote Loop Back

Error Code	Test Result	Description/ Recommendation
1000	ABORT	Could not seize the endpoint or B-channels for test. 1. Retry the command at 1-minute intervals a maximum of 5 times.
1005	ABORT	The endpoint's MIMs Supported field is administered to "no." 1. Use the **change station extension** command to change parameter only if the endpoint documentation reflects support for ISDN-BRI Management and Maintenance Procedures.
1113	ABORT	The signaling link between the switch and the endpoint is down. 1. Use the **test port PCSSpp long** command to clear any errors which prevent establishment of the signaling link. 2. Examine the results of the Signaling Link Status Test (#626) which is run as part of this command. If this test aborts or fails, follow the repair procedure for Test #626. 3. If the XID Test continues to abort, escalate the problem.
1139	ABORT	The Packet Bus in the port network is out-of-service. 1. Follow the repair procedures for the Packet Bus. 2. After completing Step 1, execute the **test port long PCSSpp** command, and review the results of the BRI Port Local LAN Loop Around Test to verify the repair.
1141	ABORT	The PKT-CTRL is out-of-service. 1. Refer to PKT-CTRL (Packet Control Circuit Pack) Maintenance documentation.
1144	ABORT	The PPN Packet Bus is out-of-service. 1. Follow the repair procedures for the Packet Bus in the PPN. 2. After completing Step 1, execute the **test port long PCSSpp** command, and review the results of the BRI Port Local LAN Loop Around Test to verify the repair.

Continued on next page

Table 3-53. TEST #627 BRI Remote Loop Back — *Continued*

Error Code	Test Result	Description/ Recommendation
1187	ABORT	The circuit pack, port or station may have been busied out by a technician. 1. Look in the Error Log for Error Type 18 (busied out) for BRI-BD, BRI-PORT, or BRI-SET. 2. If this error type is present for BRI-SET only, then release the station via the **release station** command. a. If this error type is present for BRI-PORT and BRI-SET, then release the port via **release port PCSSpp** command and run the test again. b. If the error is present for BRI-BD, BRI-PORT, and BRI-SET, then release the circuit pack via the **release port PCSSpp** command and run the test again. If the error is present for both BRI-BD and BRI-PORT, then release the circuit pack via the **release board PPCSS** command and run the test again. If the error is present for BRI-SET only, then release the circuit pack via the **release port PPCSS** command and run the test again. **NOTE:** When you release the circuit pack, you release all ports associated with it. If certain ports still need to be busied out, use the **release port PCSSpp** command to busy them out. 3. Make sure the terminal is connected. 4. Retry the command at 1-minute intervals a maximum of 5 times.
2012	ABORT	Internal system error 1. Retry the command at 1-minute intervals a maximum of 5 times.
2068	ABORT	The endpoint has rejected the switch sent application message. This indicates that the endpoint does not support the ISDN-BRI Management and Maintenance Procedure for Loop Back Testing. 1. Use the **change station extension** command and change the `MIMs Supported` field to **n**.
2069	ABORT	The endpoint has returned an error response to the application message sent by the switch.
2100	ABORT	Could not allocate the necessary system resources to run this test. 1. Retry the command at 1-minute intervals a maximum of 5 times.

Continued on next page

Table 3-53. TEST #627 BRI Remote Loop Back — *Continued*

Error Code	Test Result	Description/ Recommendation
2000	FAIL	No loop back activation or deactivation response is received from the endpoint. 1. Consult the endpoint documentation to determine if ISDN-BRI Management and Maintenance Procedures are supported. If not supported, use **change station extension** command to change the `MIMs Supported?` field to **n**. Use the **busyout station extension** and **release station extension** commands to busyout and release the endpoint to resolve any endpoint alarms resulting from failure of this test. 2. If the endpoint supports these procedures and the test continues to fail, assume the endpoint is defective and replace it.
2071 2072	FAIL FAIL	No data is detected on Channel B1 during loop back. No data is detected on Channel B2 during loop back. 1. Replace the endpoint and repeat test. 2. If test continues to fail, check the wiring between the endpoint and the switch and repeat the test.
	PASS	The endpoint has responded to the switch activate and deactivate loop back application messages. Data has been detected on the looped back channels.
1000	ABORT	Could not seize the endpoint or B-channels for test. 1. Retry the command at 1-minute intervals a maximum of 5 times.

BRI XID Test (#628)

This test checks the D-channel connection between the SPE and the endpoint or adjunct.

In this test, a D-channel XID frame is sent to the endpoint or adjunct over the point-to-point signaling link. The test passes if the endpoint or adjunct responds with a Layer 2 XID-RESPONSE frame.

This test must be administered to not run in the station administration form for ports on a TN2208.

Table 3-54. TEST #628 BRI XID

Error Code	Test Result	Description/ Recommendation
1000	ABORT	The BRI-SET, ASAI-ADJ, ATT-ADJ, LGATE-AJ, ATTE-AJ is busy. The test cannot be executed at this time: 1. Pause momentarily (30 seconds) and re-execute at this time. **NOTE:** A BRI-PORT can also be busy. When using this for BRI-PORT/ABRI-PORT tests, the words "BRI-SET, ASAI-ADJ, ATT-ADJ, " can be changed to "BRI-PORT, ABRI-PORT, ATT-ADJ."
1005	ABORT	The endpoint is not administered to support XID Testing. 1. If the endpoint documentation reflects support XID testing, use the **change station extension** command to change the `XID Testing?` field on the form to **y**.
1113	ABORT	The signaling link between the switch and the endpoint is down. 1. Use the **test port PCSSpp l** command to clear any errors which prevent establishment of the signaling link. 2. Examine the results of the Signaling Link Status Test (#626) which is run as part of this command. If this test aborts or fails, follow the repair procedure for Test #626. 3. If the XID test continues to abort, escalate the problem.
1139	ABORT	The Packet Bus in the port network is out-of-service. 1. Follow the repair procedures for the Packet Bus. 2. After completing Step 1, execute the **test port long PCSSpp** command, and review the results of the BRI Port Local LAN Loop Around Test to verify the repair.
1141	ABORT	The PKT-CTRL is out-of-service. 1. Refer to PKT-CTRL (Packet Control Circuit Pack) Maintenance documentation.
1144	ABORT	The PPN Packet Bus is out-of-service. 1. Follow the repair procedures for the Packet Bus in the PPN. 2. After completing Step 1, execute the **test port long PCSSpp** command, and review the results of the BRI Port Local LAN Loop Around Test to verify the repair.

Continued on next page

Table 3-54. TEST #628 BRI XID — *Continued*

Error Code	Test Result	Description/ Recommendation
1187	ABORT	The circuit pack, port or station may have been busied out by a technician. 1. Look in the Error Log for Error Type 18 (busied out) for BRI-BD, BRI-PORT, or BRI-SET. 2. If this error type is present for BRI-SET only, then release the station via the **release station** command. a. If this error type is present for BRI-PORT and BRI-SET, then release the port via **release port PCSSpp** command and run the test again. b. If the error is present for BRI-BD, BRI-PORT, and BRI-SET, then release the circuit pack via the **release port PCSSpp** command and run the test again. If the error is present for BRI-SET only, then release the circuit pack via the **release port PCSSpp** command and run the test again. If the error is present for both BRI-BD and BRI-PORT, then release the circuit pack via the **release board PPCSS** command and run the test again. **NOTE:** When you release the circuit pack, you release all ports associated with it. If certain ports still need to be busied out, use the **release port PCSSpp** command to busy them out. 3. Make sure the terminal is connected. 4. Retry the command at 1-minute intervals a maximum of 5 times.
2012	ABORT	Internal system error
2100	ABORT	Could not allocate the necessary system resources to run this test. 1. Retry the command at 1-minute intervals a maximum of 5 times.
2000	FAIL	The XID-RESPONSE message was not received from the endpoint. 1. Consult the endpoint documentation to determine if the Layer 2 XID and XID-RESPONSE messages are supported. If the documentation reflects no support for these messages, change `XID Testing?` field to **n** using the **change station extension** command. 2. If the endpoint supports these Layer 2 messages and the test continues to fail, assume the endpoint is defective and replace it.
	PASS	The switch can successfully pass messages over the D-channel to the BRI endpoint.

BRI Layer 3 Query Test (#629)

This test is used to check the application layer communications between the switch and the endpoint or adjunct.

For BRI endpoints, an application message containing the appropriate endpoint service state is sent by the switch to the endpoint. The endpoint responds with an acknowledgment to the application message.

For ASAI and Lucent adjuncts, this test is not executed from the administration terminal. Rather, a query message is automatically sent by the switch every two minutes. Failure of the switch to receive a response to a query from the adjunct is logged in the Hardware Error Log.

Table 3-55. TEST #629 BRI Layer 3 Query

Error Code	Test Result	Description/ Recommendation
1005	ABORT	The endpoint's `MIMs Supported?` field is administered to "no." 1. Use the **change station extension** command to change the parameter only if the endpoint documentation reflects support for ISDN-BRI Management and Maintenance Procedures.
1113	ABORT	The signaling link between the switch and the endpoint or adjunct is down. 1. Use the **test port PCSSpp long** command to clear any errors which prevent establishment of the signaling link. 2. Examine the results of Test #626, which is executed with the command. If this test aborts or fails, follow the repair procedure for the Signaling Link Status Test.
1139	ABORT	The Packet Bus in the port network is out-of-service. 1. Follow the repair procedures for the Packet Bus. 2. After completing Step 1, execute the **test port long PCSSpp** command, and review the results of the BRI Port Local LAN Loop Around Test to verify the repair.
1141	ABORT	The PKT-CTRL is out-of-service. 1. Consult the repair procedure for PKT-CTRL (Packet Control Circuit Pack) Maintenance documentation.

Continued on next page

Table 3-55. TEST #629 BRI Layer 3 Query — *Continued*

Error Code	Test Result	Description/ Recommendation
1144	ABORT	The PPN Packet Bus is out-of-service. 1. Follow the repair procedures for the Packet Bus in the PPN. 2. After completing Step 1, execute the **test port long PCSSpp** command, and review the results of the BRI Port Local LAN Loop Around Test to verify the repair.
1187	ABORT	The circuit pack, port or station may have been busied out by a technician. 1. Look in the Error Log for Error Type 18 (busied out) for BRI-BD, BRI-PORT, or BRI-SET. 2. If this error type is present for BRI-SET only, then release the station via the **release station** command. a. If this error type is present for BRI-PORT and BRI-SET, then release the port via the **release port PCSSpp** command and run the test again. b. If the error is present for BRI-BD, BRI-PORT, and BRI-SET, then release the circuit pack via the **release port PCSSpp** command and run the test again. If the error is present for BRI-SET only, then release the circuit pack via the **release port PPCSS** command and run the test again. If the error is present for both BRI-BD and BRI-PORT, then release the circuit pack via the **release board PPCSS** command and run the test again. **NOTE:** When you release the circuit pack, you release all ports associated with it. If certain ports still need to be busied out, use the **release port PCSSpp** command to busy them out. 3. Make sure the terminal is connected. 4. Retry the command at 1-minute intervals a maximum of 5 times.
2012	ABORT	Internal system error
2100	ABORT	Could not allocate the necessary system resources to run this test. 1. Retry the command at 1-minute intervals a maximum of 5 times.

Continued on next page

Table 3-55. TEST #629 BRI Layer 3 Query — *Continued*

Error Code	Test Result	Description/ Recommendation
2068	ABORT	The endpoint has rejected the switch sent application message. This indicates that the endpoint does not support the ISDN-BRI Management and Maintenance Procedure for Endpoint Service Messages. 1. Use the **change station extension** command and change the `MIMs Supported?` field to **n**.
2069	ABORT	The endpoint has returned an error response to the switch sent application message. 1. Retry the command at 1-minute intervals a maximum of 5 times.
2000	FAIL	No response is received from the endpoint or the adjunct. For BRI endpoints: 1. Consult the endpoint documentation to determine if ISDN-BRI Management and Maintenance Procedures are supported. If not supported, use the **change station extension** command to change the `MIMs Supported?` field to **n**. Use the **busyout station extension** and **release station extension** commands to busyout and release the endpoint to resolve any endpoint alarms resulting from failure of this test. 2. If the endpoint supports these procedures and the test continues to fail, assume the endpoint is defective and replace it.
	PASS	The endpoint has successfully responded to the switch's application message.

BRI Set Audits Test (#630)

This is a series of two tests which are classified as audits. The switch sends messages to the BRI endpoint to perform the following tests:

- Ringer Audit - This audit ensures that both the switch and the endpoint agree as to the current state of the endpoint's ringer.
- Lamps Audit - This audit ensures that both the switch and the endpoint agree as to the current state of the endpoint's lamps.
- Call Activity Audit - This audit ensures that the state of calls is consistent between the switch and the endpoint.

This test is not executed for ASAI or Lucent adjunct because adjuncts do not employ ringers or lamps, or establish calls on the B-channels associated with the BRI interface.

Table 3-56. TEST #630 BRI Set Audits

Error Code	Test Result	Description/ Recommendation
1113	ABORT	The signaling link between the switch and the endpoint is down. 1. Use the **test port PCSSpp long** command to clear any errors which prevent establishment of the signaling link. 2. Examine the results of the Signaling Link Status Test (#626) which is run as part of this command. If this test aborts or fails, follow the repair procedure for Test #626.
1139	ABORT	The Packet Bus in the port network is out-of-service. 1. Follow the repair procedures for the Packet Bus. 2. After completing Step 1, execute the **test port long PCSSpp** command, and review the results of the BRI Port Local LAN Loop Around Test to verify the repair.
1141	ABORT	The PKT-CTRL is out-of-service. 1. Refer to PKT-CTRL (Packet Control Circuit Pack) Maintenance documentation.
1144	ABORT	The PPN Packet Bus is out-of-service. 1. Follow the repair procedures for the Packet Bus in the PPN. 2. After completing Step 1, execute the **test port long PCSSpp** command, and review the results of the BRI Port Local LAN Loop Around Test to verify the repair.

Continued on next page

Table 3-56. TEST #630 BRI Set Audits — *Continued*

Error Code	Test Result	Description/ Recommendation
1187	ABORT	The circuit pack, port or station may have been busied out by a technician. 1. Look in the Error Log for Error Type 18 (busied out) for BRI-BD, BRI-PORT, or BRI-SET. 2. If this error type is present for BRI-SET only, then release the station via the **release station** command. a. If this error type is present for BRI-PORT and BRI-SET, then release the port via the **release port PCSSpp** command and run the test again. b. If the error is present for BRI-BD, BRI-PORT, and BRI-SET, then release the circuit pack via the **release port PCSSpp** command and run the test again. If the error is present for both BRI-BD and BRI-PORT, then release the circuit pack via the **release board PPCSS** command and run the test again. **NOTE:** When you release the circuit pack, you release all ports associated with it. If certain ports still need to be busied out, use the **release port PCSSpp** command to busy them out. 3. Make sure the terminal is connected. 4. Retry the command at 1-minute intervals a maximum of 5 times.
2012	ABORT	Internal system error
2100	ABORT	Could not allocate the necessary system resources to run this test. 1. Retry the command at 1-minute intervals a maximum of 5 times.

SPID Facility Test

This test is used to verify the wiring and operation of the signaling link between the switch and a endpoint or adjunct on a BRI interface. **This test is not executed from the administration terminal, but rather is executed by using a BRI test set equipped with a display.** The test set may replace the BRI set, ASAI or Lucent adjunct under test by plugging it into the same jack or by bridging it onto the wiring at some point between the switch and the endpoint (or adjunct), thereby creating a pseudo-BRI multipoint configuration.

When plugged into the port in this manner, the test set establishes a signaling link connection with the switch and attempts to complete SPID initialization by using the Service SPID administered for the system (see the System Maintenance Administration Form). If the test set displays the correct

administered port address for the endpoint or adjunct under test, the test passes (see Service SPID Display which follows). If after one minute nothing is displayed on the test set, the test fails.

Table 3-57. SPID Facility Test

Test Result	Description/ Recommendation
FAIL	No response is received from the endpoint. 1. Check the physical wiring between the switch and the endpoint or adjunct.
FAIL	Display does not match administered port address for the endpoint or adjunct. 1. Change station administration for endpoint or adjunct to match displayed port address.
PASS	Display matches administered port address for the endpoint or adjunct. For BRI endpoints: 1. Verify that the SPID values administered in the switch and the endpoint are consistent. 2. If the SPID values are correct, replace the endpoint. For ASAI adjuncts: 1. Verify that the TEI values administered in the switch and the adjunct are consistent. 2. If the TEI values are correct, consult the recommended repair procedures of the manufacturer for the adjunct.

The abbreviations used in (Service SPID Display) have the following meanings:

P	port network (1,2, ...)
C	Carrier (A,B,C, ...)
SS	Slot (01, 02, ...)
pp	port (01-12)
ext	extension one and two (one through 99999)
SPID	service order profile identifier

Restricted Service
Starting Display Column

1		8		14		25		31
PCSSpp	-	ext1	-	SPID111111	-	ext2	-	SPID222222

Bound to First Endpoint Translation
Starting Display Column

1		8		14		25		31
PCSSpp	*	ext1	*	SPID111111	-	ext2	-	SPID222222

Bound to Second Endpoint Translation
Starting Display Column

1		8		14		25		31
PCSSpp	-	ext1	-	SPID111111	*	ext2	*	SPID222222

CABINET (Cabinet Sensors)

MO Name (in Alarm Log)	Alarm Level	Initial Command to Run[1]	Full Name of MO
CABINET	MAJOR	test environment P	Cabinet Sensors

1. Where P is an appropriate port network number determined in the Port field from the Alarm or Error Log.

The Compact Modular Cabinet (CMC) AC Power Supply (650A) supports one alarm lead that indicates the state of both the power and fan. With multiple cabinets, alarm leads from each cabinet are tied into a single lead. The CMC uses variable speed fans to reduce noise. The CMC power unit contains Thermal Speed Control and an alarm circuit. A variable speed fan has a 3-pin connector for the variable input power for speed control and its alarm circuitry.

Table 3-58 shows the LED and alarm conditions.

Table 3-58. LED and Alarm Conditions

Condition	LED Status	Alarm State	Fan Alarm
Normal	Red off; Yellow on	Open	Normal
No input power	Red off; Yellow off	Closed	No input power
DC output not present (except Neon)	Red on; Yellow off	Closed	DC output not present (except Neon)
Fan alarm	Red on; Yellow on	Closed	Fan alarm

Fan and Filter Removal/Replacement

1. Remove the left door.
2. Remove the fan/filter access panel. See Figure 3-7.

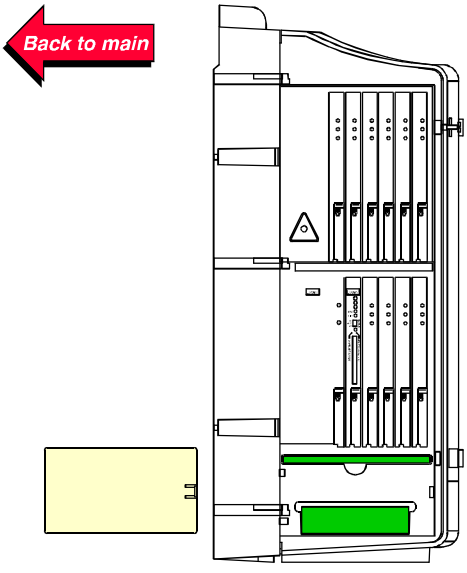

Figure 3-7. Fan/Filter Removal

Fan Assembly Removal/Replacement

1. Pull (unplug) the fan assembly from the chassis using the thumb/finger notch provided. The power for the fan automatically disconnects when the assembly is unplugged.
2. Plug in the new fan assembly. The power for the fan automatically connects when the fan assembly in plugged in.
3. Replace the fan/filter access panel and the left door.

Fan Filter Removal/Replacement

1. Remove the fan access panel from the left side of the cabinet.
2. Pull the fan filter from the chassis.
3. Clean (vacuum or wash with water) or replace the filter as needed and slide the filter back into the chassis.
4. Replace the fan access panel.

Hardware Error Log Entries and Test to Clear Values

Error Type	Aux Data	Associated Test	Alarm Level	On/Off Board	Test to Clear Value
0[1]	0	Any	Any	Any	test environment P sh r 1
1	Any	Cabinet Temperature Query Test (#122)	MAJOR	ON	test environment P sh r 3

1. Run the Short Test Sequence first. If all tests pass, run the Long Test Sequence. Refer to the appropriate test description and follow the recommended procedures.

System Technician-Demanded Tests: Descriptions and Error Codes

Always investigate tests in the order presented in the following table. By clearing error codes associated with the *Cabinet Temperature Query Test*, for example, you may also clear errors generated from other tests in the testing sequence. Test descriptions and recommended maintenance procedures follow for all errors that can occur during system technician-demanded testing.

Order of Investigation	Short Test Sequence	Long Test Sequence	D/ND[1]
Cabinet Temperature Query Test (#122)	X	X	ND
Emergency Transfer Query Test (#124) (a)	X	X	ND
External Alarm Lead Query Test (#120) (b)	X	X	ND

1. D = Destructive; ND = Nondestructive

Notes:

a. Refer to "EMG-XFER" for a description of this test.

b. Refer to "EXT-DEV ADMIN? N (External Device Alarm)" for a description of this test.

Cabinet Temperature Query Test (#122)

This test queries the Processor circuit pack for the status of the cabinet sensors in the Compact Modular Cabinet. The 650A Power Supply is equipped with thermal protection that shuts the power supply down if the internal temperature exceeds the maximum rated safe operating temperture. Only one alarm lead is supported by this cabinet type to indicate both a power or a fan problem. This

means that a failure of this test can also mean a power problem, not necessarily just a temperature (fan) problem. Also, alarm leads from multiple cabinets are tied into one single lead.

Table 3-59. TEST #122 Cabinet Temperature Query Test

Error Code	Test Result	Description/ Recommendation
1000	ABORT	System resources required to run this test are not available. 1. Retry the command at 1-minute intervals a maximum of 5 times.
2000	ABORT	Response to the test request was not received within the allowable time period.
2029	ABORT	Internal system error 1. Retry the command at 1-minute intervals a maximum of 5 times.
1	FAIL	There is a fan and/or power problem in one or more of the cabinets. The LEDs on the power supply may indicate the problem source. Otherwise follow the procedures below for each cabinet: 1. If none of the fans are running, then: a. Verify 8-14 volt DC power is available to the fan units by checking the wiring connector. — If there is 8-14 volt DC power at the connector, there should be power to the fans. If the fans still do not run, replace the fan assembly. — If there is no 8-14 volt DC power at the connector, then the power unit fan output is defective or thermally shut down. Let the power unit cool and recycle AC input power. If not fan output, then replace the power unit. If the fans still do not run, escalate the problem. 2. If only 1 of the fans is not running, replace the fan. 3. If all the fans can be started, wait five minutes and rerun the test. If the test fails again, proceed to Step 4 or 5 as applicable.

Continued on next page

Table 3-59. TEST #122 Cabinet Temperature Query Test

Error Code	Test Result	Description/ Recommendation
1	FAIL *(cont'd.)*	4. If the fans are not at high speed, measure the cabinet temperature at the air intake and the air exhaust at the top of the cabinet. a. If the 5 - 60^0 C criteria is met, there is a problem with the fans that is preventing the fans from operating at high speed. Replace the fans. If the fans run at high speed, wait 5 minutes to give the cabinet time to cool down and, rerun the test. If the problem persists, go to step 5. b. If the 5 - 60^0 C criteria is not met, the Processor circuit pack is incorrectly reporting this condition. Look for and resolve all errors on these maintenance objects first, then rerun the test. 5. If the fans are running at the high speed, check the items on list that follows. Any one of the items could be restricting or redirecting the flow of air within the cabinet. a. Check filter. If the filter is dirty or clogged it should be cleaned or replaced. The filter can either be washed with soap and water or vacuumed. b. Make sure there is nothing other than circuit packs in the carrier slots that could be restricting the air flow. c. Make sure there are no missing (blank) circuit pack or carrier faceplates. Install and/or replace them as necessary. d. Make sure the cabinet doors are properly closed. The doors must be closed for the fans to be able to properly cool the cabinet. Wait five minutes to give the fans a chance to cool the cabinet. Rerun the test. If the tests still fails, proceed to Step 6.
1	FAIL *(cont'd.)*	6. At this point, there should be nothing impeding the air flow, and the fans should be running at high speed. Check the temperatures for the 5 - 60^0 C criteria. a. If the 5 - 60^0 C criteria exists, a temperature problem exists, and the fans (at high speed) should cool down the switch. Wait five minutes and rerun the test. If the test still fails, the ambient room temperature is probably too high, and the room should be cooled. b. If the 5 - 60^0 C criteria does not exist, the fans are defective. Replace the fan assembly and rerun the test. Failures can occur on the Processor circuit pack that **is not** detected by the respective maintenance object, but that cause many, if not all, environment tests to fail. If many environment tests are failing, the suspect circuit pack (depending on the system configuration) should be replaced and the test rerun.

Continued on next page

Table 3-59. TEST #122 Cabinet Temperature Query Test

Error Code	Test Result	Description/ Recommendation
1	FAIL *(cont'd.)*	There is a problem with the environment of the power system: 7. The power unit for any one of the cabinets may have been lost. a. Verify and, if necessary, restore power units for each cabinet. b. Rerun the test. If the test still fails, proceed to Step 2. 8. The power unit could be defective. Refer to the "Removing Power" and "Restoring Power" sections in Chapter 1, "Maintenance for R6csi Compact Modular Cabinets". a. If the yellow LED is off, replace the power unit. b. If the Active Tone-Clock circuit pack loses power, the system performs a Cold-2 restart to finish (the login prompt appears at the administration terminal). c. Rerun the test.
	PASS	There is neither a power nor fan a problem in any of the cabinets. If a problem is reported, troubleshoot by using the procedures for the FAIL cases described previously.

CAP-MEM (Memory Card Capacity)

MO Name (in Alarm Log)	Alarm Level	Initial Command to Run	Full Name of MO
CAP-MEM	MINOR/ WARNING[1]	test card-mem long	Memory Card Capacity

1. The WARNING alarm is generated when the alarm is downgraded by using the **set option** command.

Memory Card Capacity tracks the percentage of used translation storage space on the memory card. Whenever translation space usage on the memory card reaches 98% of capacity, an alarm is generated. This alarm serves to inform the user that a larger flash card may be required for the system.

Error Log Entries and Test to Clear Values

Table 3-60. Memory Card Capacity Error Log Entries

Error Type	Aux Data	Associated Test	Alarm Level	On/Off Board	Test to Clear Value
1 (a)	112	Memory Card Capacity Test (#1014)	MINOR/ WARNING (b)	OFF	test card-mem long

Notes:

a. The memory card translation storage space is at least or more than 98% full.

b. This alarm has been downgraded by the **set option** command.

System Technician-Demanded Tests: Descriptions and Error Codes

Always investigate tests in the order presented in the table that follows when you are inspecting errors in the system. By clearing error codes associated with the Memory Card Capacity Test, for example, you may also clear errors generated from other tests in the testing sequence. The Memory Card Capacity Test can be initiated via either the **test card-mem long** command or after a **save translation** command.

Order of Investigation	Short Test Sequence	Long Test Sequence	D/ND[1]
12 Volt Power Supply Test (#701) (a)	X	X	ND
Memory Card Insertion Test (#695) (b)	X	X	ND
Memory Card Format and Read Test (#696) (b)	X	X	ND
Memory Card Match Test (#697) (b)	X	X	ND
Memory Card Write-Protected Test (#698) (b)	X	X	ND
Memory Card Directory Recovery Test (#699) (b)	X	X	ND
Memory Card Translation Data Integrity Test (#694) (b)		X	ND
Memory Card Erase/Write/Read Test (#693) (b)		X	ND
Memory Card Capacity Test (#1014)		X	ND

1. D = Destructive; ND = Nondestructive

Notes:

a. Refer to 12V-PWR (12 Volt Power Supply) Maintenance documentation for a description of this test.

b. Refer to CARD-MEM (Memory Card) Maintenance documentation for a description of this test.

Memory Card Capacity Test (#1014)

This test is a nondestructive test. The purpose of the test is to verify that the percentage of translation storage space used in the memory card is less than 98%.

This test can be initiated through a system technician demanded **test card-mem long** command, or it can be executed as part of a maintenance test sequence after the **save translation** operation.

Table 3-61. TEST #1014 Memory Card Capacity Test

Error Code	Test Result	Description/ Recommendation
112	ABORT	The Memory Card Translation storage is at least 98% full. 1. Inform the user that it may be necessary to upgrade to a larger flash card. 2. Replace the memory card with a larger one, or downgrade the alarm to WARNING by using the **set option** command. 3. Rerun the test.
2012 2106 2114	ABORT	Internal system error 1. Retry the command at 1-minute intervals a maximum of 5 times.
2013 2100	ABORT	Could not allocate the necessary system resources to run this test. 1. Retry the command at 1-minute intervals a maximum of 5 times
2110	ABORT	No memory card is inserted. 1. Insert a formatted memory card into the slot at the Processor circuit pack. 2. Rerun the test.
	PASS	The Memory Card Translation storage is less than 98% full.

CARD-MEM (Memory Card)

MO Name (in Alarm Log)	Alarm Level	Initial Command to Run	Full Name of MO
CARD-MEM	MAJOR[1]		Memory Card
CARD-MEM	MINOR	test card-mem long	Memory Card
CARD-MEM	WARNING	test card-mem sh	Memory Card

1. The "MAJOR" alarm occurs only at power-up time or on a Reset System 3, 4, or 5 when the switch cannot load all translations from the memory card.

A memory card contains a set of flash EPROM memory devices. The data can be stored in a memory card and can remain nonvolatile, even when the power is off. The memory card is installed into the Processor circuit pack to save the translations, announcements, and core dumps. During the system reboot or a system power down condition, the in-core system maintenance hardware error logs are temporarily saved in the memory card before the system goes down. When the system is restarted, the error logs file is read back from the memory card.

The Hard Patch feature also uses the memory card as temporary storage when LMM applies an update file to the in-core system software. The system software is stored in the "flash" section of main memory. The memory card used for saving translations doesn't contain a copy of the system software.

The recommended size of a memory card for each configuration is described in the following table.

Memory Card Size	Usage	File Names
1 Megabyte	Without Announcements	translation
4 Megabyte	With Announcements	translation announcements
10 Megabyte	With Announcements	translation announcements
10 Megabyte	Maintenance	translation announcements core_dump
10 Megabyte	System Upgrade	system_software

Customers can have either 1 MB, 4 MB, or 10 MB memory cards for the normal operations. 10 MB memory cards are also used for maintenance and software upgrades. The software upgrade memory card cannot be used for saving translations.

Common causes for failing the Memory Card Match Test (#697) are:

- The customer has had a recent upgrade and is using an old card.

- The card is not formatted for announcements.

Always use 4 MB memory Cards, 10 MB memory cards should only be used when a 4MB card gives an error in the CAP-MEM Maintenance Object Test #1014 (Memory Card Capacity Test). 10 MB cards must also be used if a DEFINITY Wireless Business System is connected.

A memory card has a write-protect switch along its edge. If the write-protect switch is enabled, the memory card cannot be written to.

The 12-volt power supply unit located in Processor circuit pack supports the erase and write operations of on-board flash memory devices. The unit also supports the memory card inserted in the Processor circuit pack. If the 12 volt power supply unit cannot be turned on to supply 12 volts, all erase and write operations fail. Refer to 12V-PWR (12 volt power supply) Maintenance documentation for a detailed description.

To write data (for example, translations) onto a memory card, the system software first erases the memory card and then writes the data. An erased bit can be written again, but a written bit cannot be changed or written again until after the next erasure. Software erase and write operations on a memory card take longer as the card usage increases. A memory card that cannot be erased or written to by software should be replaced.

Removing A Memory Card From The Slot

A memory card can be removed from the slot at the Processor circuit pack only when the yellow/red LED with a label "EmgXfr/card-in-use" is not glowing. Otherwise, the memory card operation might be interrupted abnormally, and the files stored in the memory card may become corrupted.

Resolving an Alarm Raised Against a Memory Card

The list that follows discusses the procedures for resolving an alarm that is raised against a memory card:

1. Remove the inserted memory card from the slot at the Processor circuit pack while the "EmgXfr/card-in-use" amber LED is not glowing.
2. Insert the new formatted memory card firmly into the slot at the Processor circuit pack.
3. Enter the **test card-mem** command to verify the new memory card.
4. If the alarm cannot be resolved by replacing the memory card, do the following:
    a. Remove the memory card from the Processor circuit pack.

b. Replace the Processor circuit pack. Follow the standard procedures.

c. Insert the memory card back into the slot at the Processor circuit pack.

d. Enter the **test network-control [long]** command to verify the new circuit pack and the memory card.

5. Once the alarm is resolved, enter the **save translation** command to store the current system translations to the memory card.

6. If applicable, enter the **save announcements** command to store the current announcements to the memory card.

Error Log Entries and Test to Clear Values

Table 3-62. Mrmory Card Error Log Entries

Error Type	Aux Data	Associated Test	Alarm Level	On/Off Board	Test to Clear Value
0[1]	0	Any	Any	Any	test card-mem
1(a)		Memory Card Insertion Test (#695)	MINOR	OFF	test card-mem
257(b)		Memory Card Format and Read Test (#696)	MINOR	OFF	test card-mem
513(c)	Any	Memory Card Match and Read Test (#697)	WARNING	OFF	test card-mem
769(d)		Memory Card Write-Protected Test (#698)	WARNING	OFF	test card-mem
1025(e)	104 105 106 107 108	Memory Card Dir. Recovery Test (#699)	MINOR	OFF	test card-mem
1281(f)	Any	Memory Card Translation Data Integrity Test (#694)	MINOR	OFF	test card-mem long
1537(g)	104 105 106 107 108	Memory Card Erase/Write/Read Test (#693)	MINOR	OFF	test card-mem long
3329(h)	any	None	MINOR/ MAJOR	OFF	

Continued on next page

Table 3-62. Mrmory Card Error Log Entries — *Continued*

Error Type	Aux Data	Associated Test	Alarm Level	On/Off Board	Test to Clear Value
3841(i)	Any	Save Translation	MINOR	OFF	save translation
3843(j)	Any	Save Translation	MINOR	OFF	save translation

1. Run the Short Test sequence first. If all tests pass, run the Long Test Sequence. Refer to the appropriate test description and follow the recommended procedures.

Notes:

a. System detects that no memory card is inserted in the slot at the Processor circuit pack. If a memory card is in place, the memory card may have a bad physical connection.

b. System software cannot recognize the inserted memory card because the inserted memory card is not formatted or the directories in the memory card are corrupted. The system cannot use this memory card. The memory card must be replaced with a good memory card.

c. The inserted memory card does not have enough storage space to support system operations, such as saving translations and, if applicable, announcements; or, the memory card is a system-upgrade memory card that cannot be used for saving translations. This hardware error raises a WARNING/OFF_BOARD alarm. The memory card should be replaced with one of the recommended size.

The `Aux Data` field contains the following error codes:

101 Inserted memory card is a system-upgrade memory card

102 While the announcement feature is in use, no announcement file is available in the memory card

103 The inserted memory card is a system-upgrade memory card, and, while the announcement feature is in use, no announcement file is available in the memory card.

116 The capacity of the inserted memory card doesn’t match the system configuration.

118 While the announcement feature is in use, no announcement file is available in the memory card, and the capacity of the inserted memory card doesn’t match the system configuration.

132 System translation reaches a 98% capacity of the memory card reserved storage space.

134 While the announcement feature is in use, no announcement file is available in the memory card, and system translation reaches a 98% capacity of the memory card reserved storage space.

148 The capacity of the inserted memory card doesn't match the system configuration, and system translation reaches a 98% capacity of the memory card reserved storage space.

150 While the announcement feature is in use, no announcement file is available in the memory card, and the capacity of the inserted memory card doesn't match the system configuration. Also, the system translation reaches a 98% capacity of the memory card reserved storage space.

d. The write-protection switch of the memory card is in the "protected" position. A write-protected memory card can not be erased or written. Before entering the **test** command to resolve the alarm, follow the standard procedure for taking the memory card out of the slot. Then, change the "write-protection" switch to the "not-protected" position. Finally, insert the memory card back into the slot.

e. The memory card has been detected with a broken directory. A MINOR/OFF_BOARD alarm is raised when maintenance cannot restore the broken directory. The memory card must be replaced before the test to resolve the alarm is run.

The `Aux Data` field contains the following error codes:

104 Directories on the memory card are corrupted and cannot be recovered.

105 "0" cannot be written into the memory card before an erase operation.

106 Memory card cannot be erased.

107 Data cannot be written into a memory card after an erasure.

108 12-volt power supply for directory recovery can't be turned on. The 12 volt power supply on Processor circuit pack may be defective. Follow the standard procedure to replace the Processor circuit pack.

f. The translations file stored in the memory card is corrupted with a checksum error during the read operation. The memory card can no longer hold the written data. Enter the **save translation** command to restore the translations. Then, run the **test** command to clear the alarm. If the error occurs repeatedly, replace the memory card.

g. The Memory Card Erase/Write/Read Test failed. Enter the **status card-mem** command to verify that a user's memory card is inserted and that the write-protection switch of the memory card is off. Rerun the **test card-mem** command to verify that the 12 volt power supply is functional.

Enter the **test card-mem long** command again to verify the test result of the Memory Card Erase/Write/Read Test. If the test still fails, the memory card should be replaced. After the new memory card is inserted, enter the **test card-mem long** command again to resolve the alarm.

The `Aux Data` field contains the same error codes as for Error Type 1025. See Note (e).

h. There was an error while translations were being loaded. The relevant alarm occurs at power-up or on a Reset System 3, 4, or 5 if the switch cannot load translations.

In a standard system, the alarm invokes Emergency Transfer. The repair procedure for a standard system is provided in the list that follows:

NOTE:
Follow this procedure **only** if there are no other memory card errors or alarms. If such errors or alarms exist, resolve them before trying to resolve this alarm.

1. After you resolve all other memory card problems, issue the **reset system 3** command.
2. After the system is restarted, issue the **status card-mem** command.
3. If the "translation" is not present, insert a backup memory card and then issue the **reset system 3** command.

i. The "save translation" operation failed. The reasons for failure are described in the `Aux Data` field and include the following:

1	Directory file on the memory card failed the checksum test
3	Too many commands are running
4	Command has been aborted
5	Command has collided with a current command
6	Software controller is idle
7	Memory card has been erased
8	Only one good directory is on the card
9	All directories are corrupted, and the memory card needs reformatting
10	Hard patch file is full
11	Hardware fault: data can’t be written into the memory card
12	Software error: passed parameters were out of range
13	Command has been aborted
14	Magic number is illegal
15	Driver was trapped when reading the memory card
16	No memory card is inserted
17	Second directory in the memory card could not be found
18	File in the memory card is not available

19 Memory card does not match the system usage

20 Memory card is too small for the system usage

21 Broken directory couldn't be recovered

22 System upgrade card is inserted

23 Illegal write is requested

24 Generic software failure

25 Driver timed out

26 Driver is unable to program "O's" in the memory card

27 Memory card can't be erased

28 Memory card is write-protected

29 12 volt power supply could not be turned on

A MINOR/OFF_BOARD alarm is raised when two consecutive "save translation" operations fail. The alarm is resolved only when the translation is saved onto the memory card successfully.

j. The save translations failure is due to other hardware failures. Enter the **test card-mem long** command and resolve other card-mem failures first. After the all test card-mem pass message is received, use the **save translation** command to resolve this error.

System Technician-Demanded Tests: Descriptions and Error Codes

Always investigate tests in the order presented in the table below. By clearing error codes associated with the *Memory Card Insertion Test* for example, you may also clear errors generated from other tests in the testing sequence.

Order of Investigation	Short Test Sequence	Long Test Sequence	Reset Board Sequence	D/ND[1]
12 Volt Power Supply Test (#701) (a)	X	X		ND
Memory Card Insertion Test (#695)	X	X		ND
Memory Card Format and Read Test (#696)	X	X		ND
Memory Card Match Test (#697)	X	X		ND
Memory Card Write-Protected Test (#698)	X	X		ND
Memory Card Directory Recovery Test (#699)	X	X		ND
Memory Card Translation Data Integrity Test (#694)		X		ND
Memory Card Erase/Write/Read Test (#693)		X		ND

1. D = Destructive; ND = Nondestructive

Note:

a. Refer to 12V-PWR (12 Volt Power Supply) Maintenance documentation for a description of this test.

Memory Card Erase/Write/Read Test (#693)

The purpose of this test, which is nondestructive, is to verify the erase, write, and read operations. The test erases the backup copy of the translation file stored in the memory card, and it verifies that the erase operation works. The test then writes the primary copy of the translation file from the same memory card to the erased flash segment, and it verifies that the translation file is written successfully.

This test can be initiated through a system technician demanded **test card-mem long** command, or it can be executed as part of a maintenance test sequence when the **save translation** and **save announcements** operations fail. The test and relevant applications (for example, saving translations, saving announcements) cannot be executed at the same time.

Table 3-63. TEST #693 Memory Card Erase/Write/Read Test

Error Code	Test Result	Description/ Recommendation
1192	ABORT	Applications are accessing the memory card. 1. Wait 10 minutes for the applications to complete. 2. Retry the command at 1-minute intervals a maximum of 5 times.
2012 2106 2114	ABORT	Internal system error 1. Retry the command at 1-minute intervals a maximum of 5 times.
2013 2100 none	ABORT	Could not allocate the necessary system resources to run this test. 1. Retry the command at 1-minute intervals a maximum of 5 times.
2110	ABORT	No memory card is inserted. 1. Insert a formatted memory card into the slot at the Processor circuit pack. 2. Retry the command at 1-minute intervals a maximum of 5 times.

Continued on next page

Table 3-63. TEST #693 Memory Card Erase/Write/Read Test — *Continued*

Error Code	Test Result	Description/ Recommendation
2111	ABORT	Inserted memory card cannot be recognized. 1. Insert a formatted memory card into the slot at the Processor circuit pack. 2. Retry the command at 1-minute intervals a maximum of 5 times.
2112	ABORT	Internal system error The inserted memory card is a "system-upgrade" memory card. 1. Replace the inserted memory card with a user's memory card. 2. Retry the command at 1-minute intervals a maximum of 5 times.
2115	ABORT	The memory card is write-protected. 1. Take the memory card out, and change the "write-protection" switch to the "not-protected" position. 2. Retry the command at 1-minute intervals a maximum of 5 times.
2113	ABORT	The inserted memory card has only one directory file. 1. Enter the **test card-mem** command, and verify that the Memory Card Directory Recovery Test (#699) passes. If the directory file cannot be recovered, replace the memory card. 2. Retry the command at 1-minute intervals a maximum of 5 times.
2117	ABORT	No translation file has been saved onto the memory card. 1. Enter the **save translation** command, and verify that the translations are saved onto the memory card successfully. 2. Retry the command at 1-minute intervals a maximum of 5 times.
104	FAIL	Directories on the memory card are corrupted and cannot be recovered.
105	FAIL	"0" cannot be written into memory before an erase operation.
106	FAIL	Memory card cannot be erased.
107	FAIL	Data cannot be written onto a memory card after an erasure. 1. Replace the memory card and re-run the test.
108	FAIL	12-volt power supply for the Memory Card Erase/Write/Read Test can't be turned on. The 12-volt power supply on Processor circuit pack may be defective. 1. Re-enter the **test card-mem** command, and verify the result of Test #701 for the 12 Volt Power Supply. 2. If Test #701 fails, follow the Standard Repair Procedure to replace the Processor circuit pack. 3. Retry the command a 1-minute intervals a maximum of 5 times.

Memory Card Translation Data Integrity Test (#694)

This test, which is nondestructive, verifies the integrity of the translation file stored in the memory card by reading (without any PREC updates) the translation file from the memory card and by then performing a checksum error checking. The calculated checksum value is compared with the recorded checksum value in the translation file. If these two values are different, this indicates that the translation file is corrupted.

Table 3-64. TEST #694 Memory Card Translation Data Integrity Test

Error Code	Test Result	Description/ Recommendation
2012 2106 2114	ABORT	Internal system error 1. Retry the command at 1-minute intervals a maximum of 5 times.
2013 2100 none	ABORT	Could not allocate the necessary system resources to run this test. 1. Retry the command at 1-minute intervals a maximum of 5 times.
2110	ABORT	No memory card is inserted. 1. Insert a formatted memory card into the slot at the Processor circuit pack. 2. Retry the command at 1-minute intervals a maximum of 5 times.
2111	ABORT	Inserted memory card cannot be recognized. 1. Insert a new formatted memory card into the slot at the Processor circuit pack. 2. Retry the command at 1-minute intervals a maximum of 5 times.
2112	ABORT	Internal system error The inserted memory card is a system-upgrade memory card. 1. Replace the inserted memory card with a user's memory card. 2. Retry the command at 1-minute intervals a maximum of 5 times.
Any	FAIL	A checksum error is detected in the translation file that is stored in the inserted memory card. 1. Enter the **save translation** command, and verify that translations can be successfully saved onto the memory card. 2. Rerun the test. 3. If the test fails again, replace the memory card, and repeat Steps 1 and 2.
	PASS	No checksum error is found in the translation file.

Memory Card Insertion Test (#695)

This test, which is nondestructive, verifies whether a memory card is inserted into the memory card slot at the Processor circuit pack and also whether the system can detect its existence.

Table 3-65. TEST #695 Memory Card Insertion Test

Error Code	Test Result	Description/ Recommendation
2012 2106 2114	ABORT	Internal system error 1. Retry the command at 1-minute intervals a maximum of 5 times.
2013 2100 none	ABORT	Could not allocate the necessary system resources to run this test. 1. Retry the command at 1-minute intervals a maximum of 5 times.
	FAIL	No memory card is inserted in the Processor circuit pack, or the inserted memory card has a bad connection. 1. Insert a memory card into the slot at the Processor circuit pack. 2. If a memory card is already inserted, take the memory card out and examine the connectors of the memory card and the Processor circuit pack. Insert the memory card into the slot again. 3. When a memory card is pushed into the slot, make sure that the memory card is inserted firmly into the slot. 4. Re-enter the **test card-mem** command. If the test still fails, replace the memory card, and then repeat this step one more time. 5. If the test still fails after you replace the memory card, replace the Processor circuit pack. Follow the Standard Repair Procedures for a memory card.
	PASS	A memory card is inserted into the Processor circuit pack, and the system can recognize its existence.

Memory Card Format and Read Test (#696)

This test is a nondestructive test. The memory card must be formatted before an application. The test reads the directory file from the memory card, and it verifies the integrity of the directory file.

Table 3-66. TEST #696 Memory Card Format and Read Test

Error Code	Test Result	Description/ Recommendation
2012 2106 2114	ABORT	Internal system error 1. Retry the command at 1-minute intervals a maximum of 5 times.
2013 2100 none	ABORT	Could not allocate the necessary system resources to run this test. 1. Retry the command at 1-minute intervals a maximum of 5 times.
2110	ABORT	No memory card is inserted. 1. Insert a formatted memory card into the slot at the Processor circuit pack. 2. Retry the command at 1-minute intervals a maximum of 5 times.
2113	ABORT	One of the two directories in the memory card is corrupted. 1. Re-enter the **test card-mem** command, and verify that Test #699 passes. 2. If the test is aborted again with this error code, replace the memory card.
	FAIL	System software cannot recognize the inserted memory card. The memory card is not formatted, or the directories of the memory card are corrupted. 1. Replace the memory card with a new formatted memory card. 2. Retry the command at 1-minute intervals a maximum of 5 times.
	PASS	System recognizes the inserted memory card, and it can read the directories from the memory card.

Memory Card Match Test (#697)

This test is a nondestructive test. The test verifies the inserted memory card for consistency with the system configuration. The test helps answer the following questions:

- Is the inserted memory card a system software upgrade card?
- Does the size of the inserted memory card match the capacity of the system configuration?
- Does the inserted memory card contain the Announcement file for a system with an Announcement circuit pack?
- Does the size of the translations in the system reach 98% of the reserved storage space on the memory card?

If the answer to any of these questions is "yes," maintenance raises a WARNING alarm for service attention. A new memory card is usually required.

Table 3-67. TEST #697 Memory Card Match Test

Error Code	Test Result	Description/ Recommendation
2012 2106 2114	ABORT	Internal system error 1. Retry the command at 1-minute intervals a maximum of 5 times.
2013 2100 none	ABORT	Could not allocate the necessary system resources to run this test. 1. Retry the command at 1-minute intervals a maximum of 5 times.
2110	ABORT	No memory card is inserted. 1. Insert a formatted memory card into the slot at the Processor circuit pack. 2. Rerun the test.
2111	ABORT	Inserted memory card is not formatted. 1. Insert a formatted memory card into the slot at the Processor circuit pack. 2. Rerun the test.
101	FAIL	The inserted memory card is a system-upgrade memory card. 1. Replace the memory card with a user's memory card. 2. Retry the command at 1-minute intervals a maximum of 5 times.
102	FAIL	The inserted memory card does not contain an Announcements file, and the system is configured with the Announcement feature. 1. Replace the memory card with a 10 MB memory card. 2. Retry the command at 1-minute intervals a maximum of 5 times.
103	FAIL	The memory card is a system-upgrade memory card and, while the announcement feature is in use, no announcement file is available in the memory card. Possible causes include: ■ The customer has had a recent upgrade and is using an old card. ■ The card is not formatted for announcements 1. Replace the memory card with the appropriate size and formatting. See the system configuration guidelines. 2. Retry the command at 1-minute intervals a maximum of 5 times.

Continued on next page

Table 3-67. TEST #697 Memory Card Match Test — *Continued*

Error Code	Test Result	Description/ Recommendation
116	FAIL	The capacity of the inserted memory card doesn't match the system configuration. 1. Replace the memory card with one of a larger size. See the system configuration guidelines. 2. Retry the command at 1-minute intervals a maximum of 5 times.
118	FAIL	While the announcement feature is in use, no announcement file is available in the memory card, and the capacity of the inserted memory card doesn't match the system configuration. 1. Replace the memory card with one of a larger size. See the system configuration guidelines. 2. Retry the command at 1-minute intervals a maximum of 5 times.
132	FAIL	Translation reaches 98% of the memory card reserved storage space. 1. Replace the memory card with one of a larger size. See the system configuration guidelines. 2. Retry the command at 1-minute intervals a maximum of 5 times.
134	FAIL	While the announcement feature is in use, no announcement file is available in the memory card, and system translation reaches a 98% capacity of the memory card reserved storage space. 1. Replace the memory card with one of a larger size. See the system configuration guidelines. 2. Retry the command at 1-minute intervals a maximum of 5 times.
148	FAIL	The capacity of the inserted memory card doesn't match the system configuration, and system translation reaches 98% of the memory card reserved storage space. 1. Replace the memory card with one of a larger size. See the system configuration guidelines. 2. Retry the command at 1-minute intervals a maximum of 5 times.
150	FAIL	While the announcement feature is in use, no announcement file is available in the memory card, and the capacity of the inserted memory card doesn't match the system configuration. Also, system translation reaches a 98% capacity of the memory card reserved storage space. 1. Replace the memory card with one of a larger size. See the system configuration guidelines. 2. Retry the command at 1-minute intervals a maximum of 5 times.
	PASS	The inserted memory card matches the system configuration, and the card has enough space for saving translations and (if applicable) announcements.

Memory Card Write-Protection Test (#698)

This test, which is nondestructive, verifies whether the write-protected switch on the memory card is turned on. The memory card cannot be erased or written to when the write-protected switch is on.

Table 3-68. TEST #698 Memory Card Write-Protected Test

Error Code	Test Result	Description/ Recommendation
2012 2106 2114	ABORT	Internal system error 1. Retry the command at 1-minute intervals a maximum of 5 times.
2013 2100 none	ABORT	Could not allocate the necessary system resources to run this test. 1. Retry the command at 1-minute intervals a maximum of 5 times.
2110	ABORT	No memory card is inserted. 1. Insert a formatted memory card into the slot at the Processor circuit pack. 2. Retry the command at 1-minute intervals a maximum of 5 times.
2111	ABORT	Inserted memory card is not formatted. 1. Insert a formatted memory card into the slot at the Processor circuit pack. 2. Retry the command at 1-minute intervals a maximum of 5 times.
	FAIL	The Write-Protect switch of the inserted memory card is set to the protect position. 1. Take the memory card out, and move the write-protect switch to the "not-protected" position. 2. Insert the memory card back into the slot. 3. Retry the command at 1-minute intervals a maximum of 5 times.
	PASS	The inserted memory card is not write-protected.

Memory Card Directory Recovery Test (#699)

This test is a nondestructive test. All memory cards, except the memory card for system software upgrade, have two copies of both directory files and translation files to ensure that there is at least a good translation file in the memory card at any time, especially during the "save translation" operation.

If one of the two directory files (for example, the directory file) is missing or broken (for example, the directory file has a bad checksum), maintenance can build the directory file. The Memory Card Directory Recovery Test

- Verifies the integrity of both active and backup directory files in a memory card, and
- Requests a rebuilding of the directory file if the file is missing or corrupted.

When the test passes, both directories are sane. If the memory card is a system-upgrade memory card, the test is aborted. If the test fails, the broken or missing directory cannot be rebuilt. As a result, all subsequent "write-to-memory card" operations are blocked. When an alarm is raised and Error Type 1025 for CARD-MEM is active, replace the memory card.

Table 3-69. TEST #699 Memory Card Directory Recovery Test

Error Code	Test Result	Description/ Recommendation
1192	ABORT	Contention error. Applications are accessing the memory card. 1. Wait 10 minutes for the applications to complete. 2. Retry the command at 1-minute intervals a maximum of 5 times.
2012 2106 2114	ABORT	Internal system error 1. Retry the command at 1-minute intervals a maximum of 5 times.
2013 2100 none	ABORT	Could not allocate the necessary system resources to run this test. 1. Retry the command at 1-minute intervals a maximum of 5 times.
2110	ABORT	No memory card is inserted. 1. Insert a formatted memory card into the slot at the Processor circuit pack. 2. Retry the command at 1-minute intervals a maximum of 5 times.
2111	ABORT	Inserted memory card cannot be recognized. 1. Insert a new formatted memory card into the slot at the Processor circuit pack. 2. Retry the command at 1-minute intervals a maximum of 5 times.
2112	ABORT	Internal system error The inserted memory card is a "system-upgrade" memory card. 1. Replace the inserted memory card with a user's memory card. 2. Retry the command at 1-minute intervals a maximum of 5 times.
2115	ABORT	The memory card is write-protected. 1. Take the memory card out, flip the "write-protection" switch to the "not-protected" position, and insert the memory card back into the slot. 2. Retry the command at 1-minute intervals a maximum of 5 times.

Continued on next page

Table 3-69. TEST #699 Memory Card Directory Recovery Test — *Continued*

Error Code	Test Result	Description/ Recommendation
104	FAIL	Directories in the memory card are corrupted and cannot be recovered.
105	FAIL	"0" cannot be written into memory before an erase operation.
106	FAIL	Memory card cannot be erased.
107	FAIL	Data cannot be written into a memory card after the erase operation. Maintenance cannot restore the missing or broken directory file in the inserted memory card. 1. Replace the memory card with a new, formatted one. 2. Retry the command at 1-minute intervals a maximum of 5 times.
108	FAIL	12-volt power supply for directory recovery can't be turned on. The 12-volt power supply on Processor circuit pack may be defective.
		1. Re-enter the **test card-mem** command, and verify the result of Test #701 for 12 Volt Power Supply. 2. If Test #701 fails, follow the Standard Repair Procedure to replace the Processor circuit pack. 3. Retry the command at 1-minute intervals a maximum of 5 times.
	PASS	Both directory files in the inserted memory card are sane.

CLSFY-BD (Call Classifier Circuit Pack)

MO Name (in Alarm Log)	Alarm Level	Initial Command to Run[1]	Full Name of MO
CLSFY-BD	MIN	test board PCSS sh	Call Classifier Circuit Pack
CLSFY-BD	WRN	test board PCSS sh	Call Classifier Circuit Pack

1. Where P is the port network number (1 for PPN); C is the carrier designation (for example, A, B, or C); and SS is the address of the slot in the carrier where the circuit pack is located (for example, 01, 02, ..., etc.).

Refer to XXX-BD (Common Port Circuit Pack) Maintenance documentation for circuit pack level errors. See also Call Classifier Port (CLSFY-PT) Maintenance documentation for related port information.

CLSFY-PT (Call Classifier Port)

MO Name (in Alarm Log)	Alarm Level	Initial Command to Run[1]	Full Name of MO
CLSFY-PT(a)	MAJOR	test port PCSSpp sh	Call Classifier Port Maintenance
CLSFY-PT	MINOR	test port PCSSpp sh	Call Classifier Port Maintenance
CLSFY-PT	WARNING	release port PCSSpp	Call Classifier Port Maintenance

1. Where P is the port network number (1 for PPN); C is the carrier designation (A, B, or C); SS is the address of the slot in the carrier where the circuit pack is located (01, 02, ..., and so forth); and pp is the 2-digit port number (01, 02, ..., and so forth).

The TN744D Call Classifier (CLSFY-BD) circuit pack is a service circuit pack that enables usage of the Outbound Call Management (OCM) and the Inbound Call Management (ICM) features. The TN744D also enables usage of R2-MFC signaling for incoming and outgoing feature operation. There are eight ports (CLSFY-PTs) on the Call Classifier circuit pack. Each port can handle call classification, touch-tone reception, or MFC tone generation and detection or touch-tone reception.

The CLSFY-PT maintenance feature defines a set of tests to ensure that the Call Classifier circuit pack ports are capable of detecting tones for call classification and detecting and generating necessary tones for correct MFC feature operation.

NOTE:
A TN744D Call Classifier/Tone Detector circuit pack may be reuiqred in systems with heavy traffic. This circuit pack can be installed into any port, although slot 1 of Cabinet B is preferred.

Hardware Error Log Entries and Test to Clear Values

Table 3-70. Call Classifier Port (CLSFY-PT) Error Log Entries

Error Type	Aux Data	Associated Test	Alarm Level	On/Off Board	Test to Clear Value
1	any	Tone Detector Audit/Update Test (#43)	MAJOR/ MINOR (a)	ON	test port PCSSpp r 2

Continued on next page

Table 3-70. Call Classifier Port (CLSFY-PT) Error Log Entries — *Continued*

Error Type	Aux Data	Associated Test	Alarm Level	On/Off Board	Test to Clear Value
18		Port has been busied out by system technician	WARNING	OFF	release port PCSSpp
257 (b)	17666	Test (#43)	MAJOR/ MINOR (a)	ON	test port PCSSpp r 3
513 (c)	any	Tone Detection Verification Test (#42)	MAJOR/ MINOR (a)	ON	test port PCSSpp r 3

Notes:

a. There are two possible alarm levels for this error type: major alarm and minor alarm. A major alarm is raised if the total number of call classifier ports currently in-service is less than or equal to 1/2 of the administered threshold number. Otherwise, a minor alarm is raised. In either case, run the short test sequence against the port and follow the error code procedures for the individual tests.

   The threshold number of call classifier ports for service is administered using the **change system-parameters maintenance** command.

b. The call classifier port lost its translation. Testing the call classifier port is sufficient to reload its translation. If testing the call classifier port does not clear the error, then the call classifier circuit pack containing the defective call classifier port should be replaced.

c. This error indicates the call classifier port is having problems detecting system tones (DTMF, etc.) or detecting and generating necessary R2-MFC tones. This error should accompany some percentage of failed calls. If this error type is persistently logged, then the call classifier circuit pack containing the defective call classifier port should be replaced.

System Technician-Demanded Tests: Descriptions and Error Codes

Always investigate tests in the order presented in the following tables when inspecting errors in the system. By clearing error codes associated with the *Tone Detection Verification Test*, for example, you may also clear errors generated from other tests in the testing sequence.

Table 3-71. System Technician-Demanded Tests: CLSFY-PT

Order of Investigation	Short Test Sequence	Long Test Sequence	D/ND[1]
Tone Detection Verification Test (#42)	X	X	ND
Tone Detection Audit/Update Test (#43)	X	X	ND

1. D = Destructive, ND = Non-destructive

Tone Detection Verification Test (#42)

This test checks out each port in both the touch-tone receiver mode and in the R2-MFC tone detection/generation mode. During the first half of the test, the touch-tone receiver mode is tested. In the second half of the test, each port is put into the R2-MFC mode. During this portion of the test, each port's ability to accurately detect and generate all forward and backward MFC tones is verified.

Table 3-72. TEST #42 Tone Detection Verification Test

Error Code	Test Result	Description/ Recommendation
none	ABORT	The system was not able to allocate all the resources needed for this test OR there was an internal system error
1	ABORT	The system could not allocate all the resources needed to test the tones.
1001	ABORT	The system was unable to put the Call Classifier port in the appropriate mode to test it.
1002	ABORT	The system could not allocate time slots for the test connection. This situation could occur when the system is heavily loaded. If the system is not heavily loaded, then test the TDM-BUS via the **test tdm [1|2]** command. Refer to the TDM-BUS (TDM Bus) Maintenance documentation for details. 1. Retry the command at 1-minute intervals a maximum of 5 times.

Continued on next page

Table 3-72. TEST #42 Tone Detection Verification Test — *Continued*

Error Code	Test Result	Description/ Recommendation
1003	ABORT	The system could not allocate a Tone-Clock circuit pack for the test connection. This situation could occur when the system is heavily loaded or if a Tone-Clock circuit pack is not present in the port network when this test is executed. 1. Verify the existence of a Tone-Clock circuit pack in the same port network. 2. If a Tone-Clock circuit pack is missing, install one in the same port network. 3. Allow approximately 1 minute for the Tone-Clock circuit pack maintenance to run on the newly inserted Tone-Clock circuit pack. 4. Retry the command at 1-minute intervals a maximum of 5 times.
2006	ABORT	This abort code indicates that the active Tone-Clock circuit pack might not be functioning properly. If there is more than one Tone Detector circuit pack in the system, then the problem can be either with the Tone-Clock circuit pack or the Tone Detector circuit pack. This could also be caused by the companding mode administered for the system not matching that of the Tone Detector circuit pack. 1. Make sure that the companding mode of the system matches that of the Tone Detector (TN748 for mu-law systems and TN420 for A-law systems). 2. Test the active Tone-Clock circuit pack in the port network. This test is being executed via the **test tone-clock qualifier** system technician command. ("qualifier" is the carrier of the active Tone-Clock circuit pack to be tested. Valid qualifiers are: a, b, 1a, 1b, 2a, and 2b.) Refer to the "TONE-BD (Tone-Clock Circuit Pack)" Maintenance documentation for details. 3. Retry the command at 1-minute intervals a maximum of 5 times.
2000	ABORT	Response to the test request was not received within the allowable time period.
2100	ABORT	Could not allocate the necessary system resources to run this test. 1. Retry the command at 1-minute intervals a maximum of 5 times.
1-3	FAIL	DTMF digits were not detected correctly. This may or may not impact reception of R2-MFC calls. 1. Run the short test sequence via the **test port PCSSpp sh r 1** command. 2. If the problem persists, the system is still operating properly but system capacity will be reduced. In order to restore system performance to normal, replace the Call Classifier circuit pack containing the defective CLSFY-PT (Call Classifier Port).

Continued on next page

Table 3-72. TEST #42 Tone Detection Verification Test — *Continued*

Error Code	Test Result	Description/ Recommendation
101-122	FAIL	Forward or Backward MFC signals were not correctly generated or detected. This impacts reception of incoming MFC calls. 1. Run the short test sequence via the **test port PCSSpp sh r 1** command. 2. If the problem persists, the system is still operating properly but system capacity will be reduced. In order to restore system performance to normal, replace the Call Classifier circuit pack containing the defective CLSFY-PT (Call Classifier Port).
	PASS	Tone Detection Verification is successful. The Call Classifier Port (CLSFY-PT) is able to detect/generate all necessary tones.

Tone Detector Audit/Update Test (#43)

A sanity audit is performed on the CLSFY-PT (Call Classifier Port).

Table 3-73. Tone Detector Audit/Update Test (#43)

Error Code	Test Result	Description/ Recommendation
none	ABORT	The system was not able to allocate all the resources needed for this test. 1. Wait 1 minute, and repeat the command a maximum of 5 times.
2000	ABORT	Response to the test request was not received within the allowable time period.
2100	ABORT	Could not allocate the necessary system resources to run this test. 1. Retry the command at 1-minute intervals a maximum of 5 times.
	FAIL	Hardware audit failed. 1. Run the short test sequence via the **test port PCSSpp sh r 1** command. 2. If the problem persists, the system is still operating properly but system capacity will be reduced. In order to restore system performance to normal, replace the CLSFY-BD (Call Classifier circuit pack) containing the defective CLSFY-PT (Call Classifier Port).
	PASS	The (CLSFY-PT) Call Classifier Port has passed the sanity inquiry.

CO-BD (Central Office Trunk Circuit Pack)

MO Name (in Alarm Log)	Alarm Level	Initial Command to Run[1]	Full Name of MO
CO-BD	MIN	test board PCSS sh	Central Office Trunk Circuit Pack
CO-BD	WRN	test board PCSS sh	Central Office Trunk Circuit Pack

1. Where P is the port network number (1 for PPN); C is the carrier designation (for example, A, B, C, D, or E); and SS is the address of the slot in the carrier where the circuit pack is located (for example, 01, 02, ..., etc.).

Refer to XXX-BD (Common Port Circuit Pack) Maintenance documentation for circuit pack level errors. See also CO-TRK (CO Trunk) Maintenance documentation for related trunk information.

CO-DS1 (DS1 CO Trunk)

MO Name (in Alarm Log)	Alarm Level	Initial Command to Run	Full Name of MO
CO-DS1	MAJOR[1]	test trunk <grp/mbr> l	DS1CO Trunk
CO-DS1	MINOR	test trunk <grp/mbr> l	DS1CO Trunk
CO-DS1	WARNING	test trunk <grp/mbr>	DS1CO Trunk

1. A Major alarm on a trunk indicates that alarms on these trunks are not downgraded by the **set options** command and that at least 75 percent of the trunks in this trunk group are alarmed.

A DS1CO (central office) trunk provides a communications channel between the system and a central office switch through either a 1.544 Mbps or a 2.048 Mbps [G3iV2-386] DS1 link. A 24 channel DS1 link consists of 24 digital DS1CO trunks. A 32 channel DS1 link [G3iV2-386] consists of 30 digital DS1CO trunks. A DS1CO trunk can be used for both voice and data communication.

The DS1CO Trunk Maintenance provides a strategy in the system to maintain a CO trunk via a port on the DS1 Interface circuit pack. The TN767B or later and TN464C or later DS1 Interface circuit packs support the low level CO trunk signaling interfaces, ground-start and loop-start. This strategy covers the in-line errors log, initialization tests, periodic tests, system technician-demanded tests, and alarm resolution and escalation.

Three trunk service states are specified in the DS1CO trunk maintenance:

1. *out-of-service*: The trunk is in a deactivated state and cannot be used for either incoming or outgoing calls.
2. *in-service*: The trunk is in an activated state and can be used for both incoming and outgoing calls.
3. *disconnect* (ready-for-service): The trunk is in an activated state but can only be used for an incoming call.

If the DS1 Interface circuit pack is out-of-service, then all trunks on the DS1 Interface circuit pack are also in the out-of-service state, and a Warning alarm is raised for each trunk.

Hardware Error Log Entries and Test to Clear Values

Table 3-74. DS1 CO Trunk Error Log Entries

Error Type	Aux Data	Associated Test	Alarm Level	On/Off Board	Test to Clear Value
0[1]	0	Any	Any	Any	test trunk <grp>/<mbr>
1 (a)	57408				
1 (a)	57487				
15 (b)	Any	Port Audit and Update Test (#36)			
18 (c)	0	busyout trunk <grp>/<mbr>	WARNING	OFF	release trunk <grp>/<mbr>
130 (d)		None	WARNING	ON	test trunk <grp>/<mbr>
257 (e)	57392	DS1 CO Dial Tone Seizure Test (#314)	MIN/MAJ[2]	OFF	
513 (f)	57393	DS1 CO Dial Tone Seizure Test (#314)	MIN/MAJ[2]	OFF	
769 (g)	57484				
1025		DS1CO Dial Tone Seizure Test (#314)	WARNING	OFF	test trunk <grp>/<mbr>
1281		Conference Circuit Test (#7)	MAJ/MIN/ WRN[3]	ON	test trunk <grp>/<mbr> r 4
1537		NPE Crosstalk Test (#6)	MAJ/MIN/ WRN[3]	ON	test trunk <grp>/<mbr> r 3
1793 (h)				ON	test board PCSS l
2562(i))	16665				
2817(j)	52992				
3840 (k)		Port Audit and Update Test (#36)			

1. Run the Short Test Sequence first. If all tests pass, run the Long Test Sequence. Refer to the appropriate test description and follow the recommended procedures.
2. This alarm will only be raised when the System-Parameter Country form has the Base Tone Generator field set to 4 (Italy). This alarm will be a MINOR alarm unless 75% or more trunks in this trunk group are out of service, then the alarm will be upgraded to a MAJOR alarm.
3. Minor alarms on this maintenance object (MO) may be downgraded to Warning alarms based on the values used in the **set options** command. If the Minor alarm is not downgraded by the **set options** values, the Minor alarm is upgraded to a Major alarm if 75 percent of the trunks in this group are alarmed.

Notes:

a. Error Type 1—Aux Data 57408—No tip ground is detected on an outgoing call.

   Aux Data 57487—PBX could not get "loop close" signal (TN767).

   The DS1 Interface circuit pack detected a hardware fault. These errors cause the Dial Tone Test (#314) to run and are only considered a problem if the Dial Tone Test fails (in which case Error Type 1025 also shows up). In this case, the trunk may be put in ready-for-service state (shown as "disconnected" by status command), which allows only incoming calls. Run the Dial Tone Test (#314) and follow its outlined procedures.

b. Error Type 15—This is a software audit error that does not indicate any hardware malfunction. Run Short Test Sequence and investigate associated errors (if any).

c. Error Type 18—System Technician has busied-out the trunk to the out-of-service state. No calls can be made on this trunk except the Facility Access Test Call.

d. Error Type 130—This error type indicates that the circuit pack has been removed or has been insane for more than 11 minutes. To clear the error, reinsert or replace the circuit pack.

e. Error Type 257—The DS1 Interface circuit pack detects a hardware fault. The Aux Data field contains the following error type: 57392—no external release on PBX disconnect [E030]. Escalate the problem.

f. Error Type 513—The DS1 Interface circuit pack detects a hardware fault. The Aux Data field contains the following error type: 57393—belated external release on PBX disconnect [E031]. Escalate the problem.

g. Error Type 769—The DS1 Interface circuit pack detects a hardware fault. The Aux Data field contains the following error type:—57484, fault is detected on tip/ring [E08C]. Escalate the error.

h. Error Type 1793—DS1 Interface circuit pack is out-of-service. Look for DS1-BD errors in the Hardware Error Log. Refer to the DS1-BD (DS1 Trunk Circuit Pack) Maintenance documentation for details.

i. Error Type 2562—Retry Failure error. This error is logged only. It is not a hardware failure and hence does not start any testing or generate any alarms. This error comes from call processing and is generated when a second attempt (retry) to seize an outgoing trunk fails.

j. Error Type 2817—Glare error. This error is logged only. It is not a hardware failure and hence does not start any testing or generate any alarms. This error is the result of a simultaneous seizure of a two-way trunk from both the near-end and the far-end. Attempt to place the call again. If the error persists, execute the Dial Tone Seizure Test (#314) and follow those procedures.

k. Error Type 3840—Port Audit and Update Test (#36) failed due to an internal system error. Enter the **status trunk** command to verify the status of the trunk. If the trunk is out-of-service, then enter the **release trunk** command to put it back into in-service. Retry the test command. If the test continues to abort, then escalate the problem.

System Technician-Demanded Tests: Descriptions and Error Codes

Always investigate tests in the order they are presented in the table below when inspecting errors in the system. By clearing error codes associated with the *NPE Crosstalk Test,* for example, you may also clear errors generated from other tests in the testing sequence.

Order of Investigation	Short Test Sequence	Long Test Sequence	D/ND[1]
NPE Crosstalk Test (#6)		X	ND
Conference Circuit Test (#7)		X	ND
DS1CO Trunk Seizure Test (#314)	X	X	ND
Port Audit and Update Test (#36)	X	X	ND

1. D = Destructive; ND = Nondestructive

NPE Crosstalk Test (#6)

One or more Network Processing Elements (NPEs) resides on each circuit pack with a TDM Bus interface. The NPE controls port connectivity and gain, and provides conferencing functions on a per-port basis. The NPE Crosstalk Test verifies that this port's NPE channel talks on the selected time slot and never crosses over to time slots reserved for other connections. If the NPE is not working correctly, one-way and noisy connections may be observed. This test is usually only part of a port's Long Test Sequence and takes about 20 to 30 seconds to complete.

Table 3-75. TEST #6 NPE Crosstalk Test

Error Code	Test Result	Description/ Recommendation
	ABORT	System resources required for this test are not available. 1. Retry the command at one-minute intervals a maximum of five times.

Continued on next page

Table 3-75. TEST #6 NPE Crosstalk Test — *Continued*

Error Code	Test Result	Description/ Recommendation
1000	ABORT	System resources required to run this test were not available. The port may be busy with a valid call. Use the **display port PCSSpp** command to determine the trunk group/member number of the port. Use the **status trunk** command to determine the service state of the port. If the service state indicates that the port is in use, then the port is unavailable for certain tests. You must wait until the port is idle before retesting. 1. If the port status is active but the port is not in use (no calls), check the error log for error type 1025 (see the error log table for a description of this error and required actions). The port may be locked up. 2. If the port status is idle, retry the command at 1-minute intervals for a maximum of 5 times.
1001	ABORT	System resources required for this test are not available. 1. Retry the command at one-minute intervals a maximum of 5 times.
1002	ABORT	The system could not allocate time slots for the test. The system may be under heavy traffic conditions or it may have time slots out-of-service due to TDM-BUS errors. Refer to the TDM-BUS (TDM Bus) Maintenance documentation to diagnose any active TDM-BUS errors. 1. If system has no TDM-BUS errors and is not handling heavy traffic, repeat test at one-minute intervals a maximum of 5 times.
1003	ABORT	The system could not allocate a tone receiver for the test. The system may be oversized for the number of Tone Detectors present or some tone detectors may be out-of-service. 1. Look for TTR-LEV errors in the Error Log. If present, refer to TTR-LEV (TTR Level) Maintenance documentation. 2. Look for TONE-PT errors in the Error Log. If present, refer to TONE-PT (Tone Generator) Maintenance documentation. 3. If neither condition exists, retry the test at 1-minute intervals a maximum of 5 times.
1004	ABORT	The port was seized by a user for a valid call. Use the **display port PCSSpp** command to determine the trunk group/member number of the port. Use the **status trunk** command to determine the service state of the port. If the service state indicates that the port is in use, then the port is unavailable for certain tests. You must wait until the port is idle before retesting. 1. If the port status is idle, retry the command at 1-minute intervals for a maximum of 5 times.

Continued on next page

Table 3-75. TEST #6 NPE Crosstalk Test — *Continued*

Error Code	Test Result	Description/ Recommendation
1020	ABORT	The test did not run due to a previously existing error on the specific port or a more general circuit pack error. 1. Examine Error Log for existing errors against this port or the circuit pack and attempt to diagnose the already existing error.
2000	ABORT	Response to the test request was not received within the allowable time period.
2100	ABORT	System resources required for this test are not available. 1. Retry the command at 1-minute intervals a maximum of 5 times.
2053	ABORT	At least one of the following errors was found on the DS1 circuit pack: loss of signal (1281), blue alarm (1793), red alarm (2049), yellow alarm (2305), or hyperactivity (1537). 1. Look for the above error types in the Hardware Error Log and follow the procedures given in the appropriate DS1-BD or UDS1-BD maintenance documentation for the listed error types.
	FAIL	The NPE of the tested port was found to be transmitting in error. This causes noisy and unreliable connections. 1. Replace the circuit pack.
	PASS	The port is correctly using its allocated time slots. User-reported troubles on this port should be investigated using other port tests and examining station, trunk, or external wiring.

Continued on next page

Table 3-75. TEST #6 NPE Crosstalk Test — *Continued*

Error Code	Test Result	Description/ Recommendation
0	NO BOARD	The test could not relate the internal ID to the port (no board). This could be due to incorrect translations, no board is inserted, an incorrect board is inserted, an insane board is inserted, or the board is hyperactive (see note below). 1. Check to ensure that the board translations are correct. Use the **list config** command, and resolve any problems that are found. 2. If the board was found to be correctly inserted in step 1, issue the **busyout board** command. 3. Issue the **reset board** command. 4. Issue the **release busy board** command. 5. Issue the **test board long** command. This should re-establish the linkage between the internal ID and the port. If this is not the case, dispatch to check to ensure that there is a valid board inserted. **NOTE:** Hyperactivity causes some special problems with the sequence suggested above. If the ports are translated after issuing the **list config** command but the `Vintage` field reports that there is no board (when there really is a board), then the **busyout board** and the **release busy board** commands will not work (even though the **reset board** command will work). The software puts the hyperactive board back in service after the hyperactivityclears.

Conference Circuit Test (#7)

One or more Network Processing Elements (NPEs) reside on each circuit pack with a TDM Bus interface. The NPE controls port connectivity and gain, and provides conferencing functions on a per-port basis. The Conference Circuit Test verifies that the NPE channel for the port being tested can correctly perform the conferencing function. The NPE is instructed to listen to several different tones and conference the tones together. The resulting signal is then measured by a tone detector port. If the level of the tone is within a certain range, the test passes.

Table 3-76. TEST #7 Conference Circuit Test

Error Code	Test Result	Description/ Recommendation
	ABORT	System resources required for this test are not available. 1. Retry the command at 1-minute intervals a maximum of 5 times.
1000	ABORT	The test was aborted. System resources required to run this test were not available. The port may be busy with a valid call. Use the **display port PCSSpp** command to determine the trunk group/member number of the port. Use the **status trunk** command to determine the service state of the port. If the service state indicates that the port is in use, then the port is unavailable for certain tests. You must wait until the port is idle before retesting. 1. If the port status is active but the port is not in use (no calls), check the error log for error type 1025 (see the error log table for a description of this error and required actions). The port may be locked up. 2. If the port status is idle, retry the command at 1-minute intervals for a maximum of 5 times.
1002	ABORT	The test was aborted. The system could not allocate time slots for the test. The system may be under heavy traffic conditions, or it may have time slots out of service due to TDM-BUS errors. Refer to the TDM-BUS (TDM bus) maintenance documentation to diagnose any active TDM-BUS errors. 1. If the system has no TDM-BUS errors and is not handling heavy traffic and the port status is idle, retry the command at 1-minute intervals for a maximum of 5 times.
1003	ABORT	The system could not allocate a tone receiver for the test. The system may be oversized for the number of tone detectors present or some of the tone detectors may be out of service. Issue the **list measurements tone-receiver** command to display basic information about the system's tone receivers. 1. Look for TTR-LEV errors in the error log. If present, refer to the TTR-LEV maintenance documentation. 2. Look for TONE-PT errors in the error log. If present, refer to the TONE-PT maintenance documentation. 3. If neither condition exists, retry the test at 1-minute intervals for a maximum of 5 times.
1004	ABORT	The port has been seized by a user for a valid call. Use the **status station** or **status trunk** command to determine when the port is available for testing. 1. Retry the command at one-minute intervals a maximum of five times. 2. If the test continues to abort, and the port is not in use, escalate the problem.

Continued on next page

Table 3-76. TEST #7 Conference Circuit Test — *Continued*

Error Code	Test Result	Description/ Recommendation
1018	ABORT	The test was disabled via translation. You may want to determine why the test has been disabled before you enable it. 1. Verify that the `Maintenance Test` field on the Trunk Administration screen is set to **n**. To enable the test, change the trunk administration and enter **y** into the `Maintenance Test` field. 2. Repeat the test.
1020	ABORT	The test did not run due to a previously existing error on the specific port or a more general circuit pack error. 1. Examine Error Log for existing errors against this port or the circuit pack and attempt to diagnose the previously existing error.
2000	ABORT	Response to the test request was not received within the allowable time period.
2100	ABORT	System resources required for this test are not available. 1. Retry the command at 1-minute intervals a maximum of 5 times.
2053	ABORT	At least one of the following errors was found on the DS1 circuit pack: loss of signal (1281), blue alarm (1793), red alarm (2049), yellow alarm (2305), or hyperactivity (1537). 1. Look for the above error types in the Hardware Error Log and follow the procedures given in the appropriate DS1-BD or UDS1-BD maintenance documentation for the listed error types.
	FAIL	1. Enter the **list configuration board PCSS** command. If the circuit pack is a TN767B vintage 8 or 9, replace the circuit pack with a TN767C V3 or later.The error log may have error type 1281 entries. 2. Test all administered trunks on the board. If one fails, this could be an off-board problem (such as an incoming seizure or an off-hook port seizure during the test). Retest the board. 3. If several ports fail, check the error log for TONE-BD or TONE-PT errors. If there are such errors, take the appropriate action. When the TONE errors have cleared, rerun the test. 4. If the retry passes and troubles have been reported, coordinate isolation with the CO. Make sure that the switch, the CO, and any NTCE equipment (the CSU's) have the correct administration. 5. Replace the circuit pack. **NOTE:** If the conference circuit test fails for all ports on a circuit pack, a -5 volt power problem is indicated.

Continued on next page

Table 3-76. TEST #7 Conference Circuit Test — *Continued*

Error Code	Test Result	Description/ Recommendation
	PASS	The port can correctly conference multiple connections. User-reported troubles on this port should be investigated by using other port tests and by examining station, trunk, or external wiring.
0	NO BOARD	The test could not relate the internal ID to the port (no board). This result could be due to incorrect translations, no board is inserted, an incorrect board is inserted, an insane board is inserted, or the board is hyperactive (see note below). 1. Check to ensure that the board translations are correct. Use the **list config** command, and resolve any problems that are found. 2. If the board was found to be correctly inserted in step 1, issue the **busyout board** command. 3. Issue the **reset board** command. 4. Issue the **release busy board** command. 5. Issue the **test board long** command. This should re-establish the linkage between the internal ID and the port. If this is not the case, dispatch to check to ensure that there is a valid board inserted. **NOTE:** Hyperactivity causes some special problems with the sequence suggested above.If the ports are translated after issuing the **list config** command but the `Vintage` field reports that there is no board (when there really is a board), then the **busyout board** and the **release busy board** commands will not work (even though the **reset board** command will work). The software puts the hyperactive board back in service after the hyperactivity clears.

Port Audit and Update Test (#36)

This test sends port level translation data from switch processor to the DS1 Interface circuit pack to assure that the trunk's translation is correct. Translation updates include the following data: trunk type (in/out), dial type, timing parameters, and signaling bits enabled. The port audit operation verifies the consistency of the current state of trunk kept in the DS1 Interface circuit pack and in the switch software.

Table 3-77. TEST #36 Port Audit and Update Test

Error Code	Test Result	Description/ Recommendation
	ABORT	Internal system error 1. Retry the command at 1-minute intervals a maximum of 5 times.
1000	ABORT	The test was aborted because system resources required to run this test were not available. The port may be busy with a valid call. Issue the **display port PCSSpp** command to determine the trunk group/member number of the port. Use the **status trunk** command to determine the service state of the port. If the service state indicates that the port is in use, then the port is unavailable for certain tests. You must wait until the port is idle before retesting. 1. If the port status is active but the port is not in use (no calls), check the error log for error type 1025 (see the error log table for a descriptionof this error and required actions). The port may be locked up. 2. If the port status is idle, retry the command at 1-minute intervals for a maximum of 5 times.
2000	ABORT	Response to the test request was not received within the allowable time period.
2100	ABORT	Could not allocate the necessary system resources to run this test.
	FAIL	Test failed due to internal system error. 1. Retry the command at 1-minute intervals a maximum of 5 times.
	PASS	Trunk translation has been updated successfully. The current trunk states kept in the DS1 Interface circuit pack and switch software are consistent. If the trunk is busied out, the test does not run, but returns to PASS. To verify that the trunk is in-service: 1. Enter **status trunk** command to verify that the trunk is in-service. If the trunk is in-service, no further action is necessary. If the trunk is out-of-service, continue to Step 2. 2. Enter **release-trunk** command to put trunk back into in-service. 3. Retry the test command.

Continued on next page

Table 3-77. TEST #36 Port Audit and Update Test — *Continued*

Error Code	Test Result	Description/ Recommendation
0	NO BOARD	The test could not relate the internal ID to the port (no board). This result could be due to incorrect translations, no board is inserted, an incorrect board is inserted, an insane board is inserted, or the board is hyperactive (see note below). 1. Check to ensure that the board translations are correct. Use the **list config** command, and resolve any problems that are found. 2. If the board was found to be correctly inserted in step 1, issue the **busyout board** command. 3. Issue the **reset board** command. 4. Issue the **release busy board** command. 5. Issue the **test board long** command. This should re-establish the linkage between the internal ID and the port. If this is not the case, dispatch to check to ensure that there is a valid board inserted. Hyperactivity causes some special problems with the sequence suggested above. If the ports are translated after issuing the **list config** command but the `Vintage` field reports that there is no board (when there really is a board), then the **busyout board** and the **release busy board** commands will not work (even though the **reset board** command will work). The software puts the hyperactive board back in service after the hyperactivity clears.

DS1 CO Dial Tone Seizure Test (#314)

DS1CO Dial Tone Seizure Test checks the trunk's signaling capability provided by the DS1 Interface circuit pack. The maintenance software initiates the test by sending a "seizure" message to the DS1 Interface circuit pack and expects an "active" reply from the DS1 interface circuit pack. If the "active" message is received, then the test passes. If no message is received and the timer expires, the test is aborted. If the DS1 Interface circuit pack sends a "reorder" message back to maintenance software, then the test fails.

The test **CANNOT** be run on a trunk if one of the following cases is true:

a. The trunk direction is administered as an incoming only trunk.

b. The trunk has been seized by a normal trunk call.

c. The trunk is administered with maintenance test disabled.

Table 3-78. TEST #314 DS1CO Dial Tone Seizure Test

Error Code	Test Result	Description/ Recommendation
	ABORT	Internal system error 1. Retry the command at 1-minute intervals a maximum of 5 times.
1000	ABORT	The test was aborted because system resources required to run this test were not available. The port may be busy with a valid call. Use the **display port PCSSpp** command to determine the trunk group/member number of the port. Use the **status trunk** command to determine the service state of the port. If the service state indicates that the port is in use, then the port is unavailable for certain tests. You must wait until the port is idle before retesting. 1. If the port status is active but the port is not in use (no calls), check the error log for error type 1025 (see the error log table for a description of this error and required actions). The port may be locked up. 2. If the port status is idle, retry the command at 1-minute intervals for a maximum of 5 times.
1004	ABORT	The test was aborted because the port was seized by a user for a valid call. Use the **display port PCSSpp** command to determine the trunk group/member number of the port. Use the **status trunk** command to determine the service state of the port. If the service state indicates that the port is in use, then the port is unavailable for certain tests. You must wait until the port is idle before retesting. 1. If the port status is idle, retry the command at 1-minute intervals for a maximum of 5 times.
1005	ABORT	Test failed due to incompatible configuration administered in trunk group form. 1. Verify the following fields on the trunk group administration screen: Is trunk direction incoming only? Is trunk the port 24 of the DS1 Interface circuit pack while common control channel signaling is specified? Is trunk group type the automatic CO (for example, FX)? 2. If the trunk has been administered using the above information, then this test should abort.
1018	ABORT	The test is disabled via tranlsation. You may want to determine why the test has been disabled before you enable it. 1. Verify that the `Maintenance Test` field on the Trunk Group form is set to **n**. To enable the test, issue the **change trunk-group x** command (x equals the number of the trunk group to be tested). Then, change the entry in the `Maintenance Test` field on the form to **y**. 2. Repeat the test.

Continued on next page

Table 3-78. TEST #314 DS1CO Dial Tone Seizure Test — *Continued*

Error Code	Test Result	Description/ Recommendation
1020	ABORT	The DS1 Interface circuit pack is out-of-service. 1. Look for DS1-BD errors in the Hardware Error Log. If present, refer to DS1-BD (DS1 Trunk Circuit Pack) Maintenance documentation. 2. Retry the command.
1040	ABORT	The test was aborted because this port may be an access endpoint. 1. Verify that this port is an access endpoint by issuing the **display port** command. 2. If the port has been administered as an access endpoint, then this is a normal abort.
2000	ABORT	Response to the test request was not received within the allowable time period.
2012	ABORT	The test was aborted due to an internal system error. 1. Retry the command at 1-minute intervals for a maximum of 5 times.
2100	ABORT	Could not allocate the necessary system resources to run this test. 1. Retry the command at 1-minute intervals for a maximum of 5 times.
	FAIL	The trunk cannot be seized for an outgoing call. This could cause in-line failures to be reported against the trunk (no answer would report error type 257 with auxiliary data 57487 in the error log). 1. Verify that the Trunk Type field on the trunk administration screen form matches the trunk type administered on far end switch. 2. Look for DS1-BD/UDS1-BD errors in Hardware Error Log. If present, refer to the appropriate DS1-BD/UDS1-BD (DS1/UDS1 Trunk Circuit Pack) Maintenance documentation. 3. Retry the test at 1-minute intervals for a maximum of 5 times.

Continued on next page

Table 3-78. TEST #314 DS1CO Dial Tone Seizure Test — *Continued*

Error Code	Test Result	Description/ Recommendation
2000	FAIL	Response to the seizure message was not received within the allowable time period. 1. Enter the **list configuration board PCSS** command. If the circuit pack is a TN767B vintage 8 or 9, a failure of test 314 causes a subsequent failure of test 7 due to a firmware bug. Eventually, the board and all of its ports will be taken out of service and extraneous on-board alarms will be generated. Replace the circuit pack with a TN767C V3 or later. 2. Verify that the 'Trunk Type' field on the 'Trunk Administration' screen matches the trunk type administered on far-end switch. 3. Look for DS1-BD or UDS1-BD errors in the hardware error log. If present, refer to the DS1-BD (DS1 trunk circuit pack) maintenance documentation or to the UDS1-BD (UDS1 trunk circuit pack) maintenance documentation. 4. Retry the test at 1-minute intervals for a maximum of 5 times.
2053	FAIL	At least one of the following errors was found on the DS1 circuit pack: loss of signal (1281), blue alarm (1793), red alarm (2049), yellow alarm (2305), or hyperactivity (1537). 1. Look for these error types in the Hardware Error Log and then follow the procedures given in the maintenance documentation that is appropriate for the error type that was found.
	PASS	The trunk can be seized for an outgoing call.

Continued on next page

Table 3-78. TEST #314 DS1CO Dial Tone Seizure Test — *Continued*

Error Code	Test Result	Description/ Recommendation
0	NO BOARD	The test could not relate the internal ID to the port (no board). This could be due to incorrect translations, no board is inserted, an incorrect board is inserted, an insane board is inserted, or the board is hyperactive (see Note below). 1. Check to ensure that the board translations are correct. Use the **list config** command, and resolve any problems that are found. 2. If the board was found to be correctly inserted in step 1, issue the **busyout board** command. 3. Issue the **reset board** command. 4. Issue the **release busy board** command. 5. Issue the **test board long** command. This should re-establish the linkage between the internal ID and the port. If this is not the case, dispatch to check to ensure that there is a valid board inserted. **NOTE:** Hyperactivity causes some special problems with the sequence suggested above. If the ports are translated after issuing the **list config** command but the 'Vintage' field reports that there is no board (when there really is a board), then the **busyout board** and the **release busy board** commands will not work (even though the **reset board** command will work). The software will put the hyperactive board back in service after the hyperactivity clears.

CO-TRK (CO Trunk)

MO Name (in Alarm Log)	Alarm Level	Initial Command to Run[1]	Full Name of MO
CO-TRK	MAJOR[2]	test port PCSSpp l	CO Trunk
CO-TRK	MINOR	test port PCSSpp l	CO Trunk
CO-TRK	WARNING	test port PCSSpp l	CO Trunk

1. Where P is the port network number (1 for PPN); c is the carrier designation (for example, A, B, C, D, or E); and SS is the address of the slot in the carrier where the circuit pack is located (for example, 01, 02, ...etc.).
2. A MAJOR alarm on a trunk indicates that alarms on these trunks are not downgraded by the **set options** command and that at least 75 percent of the trunks in this trunk group are alarmed.

NOTE:
If ATMS testing is enabled, check the error log for ATMS Errors #3840 and #3841. If the error log indicates that measurements exceeded acceptable thresholds, and if no other trouble is found with the **test trunk** command, run the ATMS test call with the **test analog-testcall port UUCCSSpp full** command.

Central Office (CO) trunks are 2-wire analog lines to the CO which support both incoming and outgoing calls. A CO trunk circuit pack provides an interface between the 2-wire analog line from the CO and the system's (4-wire) Time Division Multiplex (TDM) Bus. The CO Trunk circuit packs include:

- TN747B (United States), 8 port loop start or ground start CO, foreign exchange (FX), or Wide Area Telecommunications (WATS) trunks.
- TN438B (Australia), 8 port loop start.
- TN447 (United Kingdom), 8 port ground start.
- TN465B/C (multiple countries), 8 port loop start.
- TN2138 (Italy), 8 port loop start.
- TN2147C (multiple countries), 8 port loop start and United Kingdom Earth Calling or Loop Calling Guarded Clearing.

Loop Start and UK Loop Calling Guarded Clearing Operation

Idle State - Tip _ ground, Ring = CO Battery

a. Outgoing Call

1. PBX Off-Hook (Seize Message): Closes the Tip-Ring Loop
    a. CO Response: DC loop current + Dial tone
2. PBX On-Hook (Drop Message): Open Tip-Ring loop, no loop current
    a. CO Response: CO goes to idle state (see Note)

b. Incoming Call

1. CO Applies Ringing Voltage
    a. PBX Response: Detect ringing current
2. PBX Off-Hook (Answer Message): Close loop
    a. CO Response: Trip ringing, provide loop current
3. PBX On-Hook (Drop Message): Open Tip-Ring loop, no loop current
    a. CO Response: CO goes to idle state (see Note)

NOTE:
Except for the Netherlands Loop Start and UK Loop Calling Guarded Clearing trunks, CO does not normally provide an On-Hook (Disconnect) signal.

Ground Start and UK Earth Calling Operation

Idle state - Tip _ open, Ring = CO Battery

a. Outgoing Call

1. PBX Off-Hook(Seize Message): Places ground on Ring
    a. CO Response: Places ground on Tip
    b. PBX Response: close the loop
    c. CO Response: provide loop current
    d. PBX response: dial out digits
2. PBX On-Hook first (Drop Message): Open the Tip-Ring Loop, no loop current
    a. CO Response: Open circuit on Tip
3. CO On-Hook first (Disconnect): Open circuit on Tip, no loop current.
    a. PBX Response: Open Tip-Ring loop

b. B. Incoming Call

1. CO Off-Hook (Seizure): CO applies ground on Tip, CO applies ringing voltage

   a. PBX Response: Detect ringing, ring destination

2. PBX Off-Hook (Answer Message): Close loop
   a. CO Response: Trip ringing, provide loop current
3. PBX On-Hook first (Drop Message): Open the Tip-Ring Loop, no loop current
   a. CO Response: Open circuit on Tip
4. CO On-Hook first (Disconnect): Open circuit on Tip, no loop current

Hardware Error Log Entries and Test to Clear Values

Table 3-79. CO Trunk Error Log Entries

Error Type	Aux Data	Associated Test	Alarm Level	On/Off Board	Test to Clear Value
0[1]	0	Any	Any	Any	test port PCSSpp sh r 1
1 (a)	57347	None			
15 (b)	any	Port Audit Update Test (#36)			
18	0	busyout trunk <grp>/<mbr>	WARNING	OFF	release trunk <grp>/<mbr>
130(c)		None	WARNING	ON	test trunk <grp>/<mbr>
257 (a)	50176	None			
513 (a)	57364	None	MAJ/MIN/ WRN[2]	ON	
769 (a)	57392	None	MAJ/MIN/ WRN[2]	OFF	
1025 (e)	Any	Demand Diagnostic Test (#3)	MAJ/MIN/ WRN[2]	OFF	test port PCSS sh r 2
1281 (e)	Any	Demand Diagnostic Test (#3)	MAJ/MIN/ WRN[2]	ON	test port PCSS sh r 3
1537		Dial Tone Test (#0)	MAJ/MIN/ WRN[2]	OFF	test port PCSS l r 2
1793		Loop Around and Conference Test (#33)	MAJ/MIN/ WRN[2]	ON	test port PCSS l r 3
2049		NPE Cross Talk Test (#6)	MAJ/MIN/ WRN[2]	ON	test port PCSS l r 3

Continued on next page

Table 3-79. CO Trunk Error Log Entries — *Continued*

Error Type	Aux Data	Associated Test	Alarm Level	On/Off Board	Test to Clear Value
2561 (d)	57345	None			
2817 (a)	57360	None			
2817 (a)	57393	None			
2817 (d)	57484	Dial Tone Test (#0)	MAJ/MIN/ WRN[2]	OFF	test port PCSS l r 1
3073 (d)	57376	None			
3329 (d)	57408	None			
3329 (d)	57484	Dial Tone Test (#0)	MAJ/MIN/ WRN[2]	OFF	test port PCSS l r 1
3585 (d)	57424	None			
3840 (f)	8000	Analog Transmission (#844-848)		OFF	
3841 (f)		Analog Transmission (#844-848)	MINOR	OFF	test analog testcall UUCSS pp r 2

1. Run the Short Test Sequence first. If all tests pass, run the Long Test Sequence. Refer to the appropriate test description and follow the recommended procedures.
2. Minor alarms on this MO may be downgraded to warning alarms based on the values used in the **set options** command. If the Minor alarm is not downgraded by the **set-options** values, the Minor alarm is upgraded to a Major alarm if 75 percent of the trunks in this trunk group are alarmed.

Notes:

a. These are in-line errors that have no specific test associated with them. Refer to Table 10-93 for an explanation and appropriate action.

b. This is a software audit error that does not indicate any hardware malfunction. Run the Short Test Sequence and investigate associated errors (if any).

c. This error type indicates that the circuit pack has been removed or has been insane for more than 11 minutes. To clear the error, reinsert or replace the circuit pack.

d. Aux data 57345 -- Single polarity ringing current
Aux data 57376 -- No loop current on incoming call
Aux data 57408 -- No tip ground detected on outgoing call
Aux data 57424 -- No loop current on outgoing call
Aux data 57484 -- No dial tone on outgoing call

These errors cause the Dial Tone Test (#0) to run and are only considered a problem if the Dial Tone Test fails (in which case Error Type 1537 also shows up). In this case, the trunk may be put in "Ready-for-Service" state (shown as "disconnected" by status command), which allows only incoming calls. Run the Dial Tone Test (#0) and follow its outlined procedures.

If error count associated with this error type is very high (that is, 255) and if Alarm Status on the Hardware Error Report is "n" (not alarmed), then the existence of this error type indicates that, despite the fact that many in-line error messages have been received, all Call Seizure Tests have passed. Problems at the CO may cause this condition rather than problems with the PBX.

e. These errors are logged for all versions of the CO-TRK/CO-BD. However, no MINOR alarms are generated for Central Office Trunks [TN747B] with vintages V8 or greater. Any failures received by this test are still logged as Error type 1025/1281 as additional information for the system technician person.

   The system technician person should check for the use of MFT/Range extenders. If there are extenders present, and there are no other complaints or maintenance errors against this trunk, then there is a good chance that Test #3 failed due to excessive loop current and may be ignored.

f. Test calls made by the Automatic Transmission Measurement System (ATMS) returned measurements that were outside the acceptable limits. Use the **list testcall detail** command to examine specific transmission parameters that are out of spec, and investigate the trunk for that kind of noise. If the noise is acceptable, the limits administered on the "change trunk" screen should be changed.

Table 3-80. CO Trunk Errors with NO Tests

Error Type	Aux Data	Description and System Action	System Technician Action
1	57347	Port error. Ringing without ground. This error is detected on an incoming call on a ground-start CO trunk. The CO trunk circuit pack has not detected a Tip ground before ringing current is detected. This may indicate that the ground detector is not working. However, the call is accepted.	See Note 1 at end of table.

Continued on next page

Table 3-80. CO Trunk Errors with NO Tests — *Continued*

Error Type	Aux Data	Description and System Action	System Technician Action
257	50176	Battery reversal detected. This is usually caused by the CO (often seen with step-by-step and cross-bar offices in connection with outgoing calls). This is detected if the direction of the loop current changes from normal to reverse for at least 40 msec. Could occur if the trunk was just installed and for some reason the Tip and Ring wires were reversed at the PBX. If battery reversals occur during dialing, wrong numbers may result. The CO should be asked to remove the battery reversal option.	Refer problem to CO.
513	57364	Ground detector stuck active. After several occurrences, an on-board minor alarm is generated.	Run short test. If test aborts with Error Code 1000, disconnect Tip and Ring and repeat short test. If test still aborts, replace circuit pack. If test passes, refer problem to CO. If any other error code is received, pursue that problem.
769	57392	CO not releasing after call is dropped from PBX end (off-board alarm after several occurrences), or the loop is not open after a disconnect (on-board alarm after several occurrences).	For off-board alarm, refer problem to CO. For on-board alarm, the circuit pack has an on-board problem (for example, stuck relay) and should be replaced.
2561	57345	Single polarity ringing current. This error results from abnormal ringing current, but does not prevent the incoming call from being accepted. One cause could be that the reverse current detector associated with the port is failing. (Will not be detected by any tests.) Another cause could be that normal current is not detected. In this case, neither incoming nor outgoing calls can be completed, and the dial tone test also fails. The last cause could be that certain types of noise are present on the CO line during the silent period of ringing.	Check for other errors first and then see Note 4 at end of table.

Continued on next page

Table 3-80. CO Trunk Errors with NO Tests — *Continued*

Error Type	Aux Data	Description and System Action	System Technician Action
2817	57360	Ground but no ringing. This error occurs on an incoming call on a ground-start trunk. If ringing is not detected within 5 seconds of the Tip being grounded, the call is still accepted. If the CO is of the No. 5ESS. switch type, ringing delays of more than 5 seconds during heavy traffic are fairly common.	Check for other errors.
2817	57393	On the TN465, the loop is opening too slowly after a disconnect. This error indicates an on-board problem, although the trunk may be functional. On the TN2138, CO released the trunk at least 4 minutes after the PBX dropped the call. This error code is log-only and causes no other testing to occur. No alarm is generated.	Check for other errors.
3073	57376	No loop current on incoming call. The incoming destination has already answered and no loop current has been detected. If this is a hard fault, the dial tone test and all outgoing calls should also fail.	Check for other errors.
3329	57408	Trunk error. No Tip ground detected on outgoing call. This error occurs when an attempt is made to seize a ground-start CO trunk for an outgoing call and Tip ground is not detected or the caller hangs up before Tip ground is detected.	See Notes 1 and 2 at end of table.
3585	57424	No loop current on outgoing call. This error occurs on attempt to seize a loop or ground-start trunk for an outgoing call. An error occurs if loop current is not detected or the caller hangs up before it is detected.	See Note 3 at end of table.

Notes for Table 3-80:

1. At the administration terminal, busyout the affected port, and run a Long Test Sequence. Observe the test results. If any tests fail, refer to the description of the tests and the associated error codes. Release the port. If users continue to report troubles, check for other errors and make test calls to determine whether the problem should be escalated or referred to the CO.

2. At the administration terminal, busyout the affected port, and run a Long Test Sequence. If Dial Tone Test #0 passes, ignore this error. Release the port.
3. At the administration terminal, busyout the affected port, and run a Long Test Sequence. If CO Demand Diagnostic Test #3 passes and this error keeps occurring, refer problems to CO. Release the port.
4. If the error count associated with this error type is very high (that is, 255) and all tests pass, then either the reverse current detector is defective or the CO line is noisy. If the CO line is suspected, Tip and Ring observations should be made. If the line is determined to be noisy, the problem should be referred to the CO. If the reverse current detector is defective, ignore this error.

System Technician-Demanded Tests: Descriptions and Error Codes

Always investigate tests in the order they are presented in the table below when inspecting errors in the system. By clearing error codes associated with the *NPE Crosstalk Test,* for example, you may also clear errors generated from other tests in the testing sequence.

For example, you may also clear errors generated from other tests in the testing sequence.

Order of Investigation	Short Test Sequence	Long Test Sequence	D/ND[1]
NPE Crosstalk Test (#6)		X	ND
Dial Tone Test (#0)		X	ND
CO Demand Diagnostic Test (#3) (a)	X	X	ND
Loop Around and Conference Test (#33)		X	ND
Audit Update Test (#36) Analog Transmission Test (#844-848) (b)	X (c)	X (c)	ND

1. D = Destructive; ND = Nondestructive

Notes:

a. A demand test of Diagnostic Test (#3) always returns a PASS indication for CO-TRK/CO-BD [TN747B] version 8 or greater. However, any errors produced as a result of this test are logged and produce no alarms.

   If errors logged by Test #3 are the only complaints against this trunk, then the system technician person should check if MFT/Range Extenders are being used. If extenders are present, then there is a good chance that there is excessive loop current, which causes Test #3 to log errors.

However, all else being normal, these errors should not affect the customer.

b. Refer to TIE-TRK (Tie Trunk) Maintenance documentation for a description of this test.

c. ATMS test are not part of either sequence. They are run either on demand with the **test analog-testcall** command or via the ATMS schedule.

Dial Tone Test (#0)

This test attempts to seize a port and checks for the return of a dial tone.

Table 3-81. TEST #0 Dial Tone Test

Error Code	Test Result	Description/ Recommendation
	ABORT	Could not allocate system resources to run this test. 1. Retry the command at 1-minute intervals a maximum of 5 times.
1000	ABORT	System resources required to run this test are not available. The port may be busy with a valid call. Use the command **display port PCSSpp** to determine the trunk group/member number of the port. Use the **status trunk** command to determine the service state of the port. If the service state indicates that the port is in use, then the port is unavailable for certain tests. You must wait until the port is idle before retesting. 1. If the port status is idle, then retry the command at 1-minute intervals a maximum of 5 times.
1001	ABORT	System resources required to run this test were not available. This could be due to a failure to seize the port. 1. Retry the command at 1-minute intervals for a maximum of 5 times.
1002	ABORT	The system could not allocate time slots for the test. The system may be under heavy traffic conditions or it may have time slots out-of-service due to TDM-BUS errors. Refer to TDM-BUS (TDM Bus) Maintenance documentation to diagnose any active TDM-BUS errors. 1. If the system has no TDM-BUS errors and is not handling heavy traffic, repeat test at 1-minute intervals a maximum of 5 times.
1004	ABORT	The port was seized by a user for a valid call. Use the **display port PCSSpp** command to determine the trunk group/member number of the port. Use the **status trunk** command to determine the service state of the port. If the service state indicates that the port is in use, then the port is unavailable for certain tests. You must wait until the port is idle before retesting. 1. If the port status is idle, retry the command at 1-minute intervals for a maximum of 5 times.

Continued on next page

Table 3-81. TEST #0 Dial Tone Test — *Continued*

Error Code	Test Result	Description/ Recommendation
1005	ABORT	Trunk has been administered as incoming-only; dial tone can only be obtained on outgoing trunks. This is a normal condition.
1018	ABORT	Test has been disabled via administration. 1. Verify that the `Maintenance Tests?` field on the Trunk Group Form is set to **n**. To enable the test, issue the **change trunk-group x** command where "x" equals the number of the trunk group to be tested. Then change the entry in the `Maintenance Tests?` field on the form to **y**.
2000	ABORT	Response to the test was not received within the allowable time period. 1. Retry the command at 1-minute intervals a maximum of 5 times.
	FAIL	Trunk was seized, but dial tone could not be detected. 1. Test all administered outgoing ports on the board. Failure of 1 indicates a problem toward the CO. 2. If all fail, see note below. 3. Check for errors on the TONE-BD or TONE-PT. Clear any errors found, and repeat the test. 4. If the error has still not cleared, refer the problem to the CO. 5. If no service problems exist on the port, continue to use the port until the circuit pack can be replaced (as a last resort). Perform a trunk test call to see if the trunk is operable. **NOTE:** If the dial tone test fails for all ports on a circuit pack, a -5 volt power problem is indicated.

Continued on next page

Table 3-81. TEST #0 Dial Tone Test — *Continued*

Error Code	Test Result	Description/ Recommendation
2002	FAIL	Seizure portion of test failed due to hardware problem. Fault is usually caused by a disconnected trunk. 1. If the CO Demand Diagnostic Test (#3) also failed, display the Hardware Error Log. If the CO Demand Diagnostic Test failed because it could not detect ground (indicated by Error Type 1281 in the Hardware Error Log) AND Error Type 3329 or 3585 appears in the Hardware Error Log (with the same last occurred time as Error Type 1281 and 1537), replace the circuit pack. 2. Check trunk wiring to ensure good connection; repeat test if wiring correction made. 3. Locate another identical CO trunk and swap its wiring with one under test. Repeat test on both trunks and determine if problem follows trunk or remains at original port. If problem follows trunk, refer problem to CO. If problem remains at port, replace circuit pack and repeat test. 4. If replacing circuit pack does not clear failure, escalate the problem.
1009	PASS	Detected tone was not pure dial tone. No action is required.
	PASS	Trunk was seized, and dial tone was detected. User-reported troubles on this port should be investigated by using other port tests and by examining trunk or external wiring.
0	NO BOARD	The test could not relate the internal ID to the port (no board). 1. Check to ensure that the board translations are correct. Translate the board, if necessary. 2. Issue the **busyout board** command. 3. Issue the **reset board** command. 4. Issue the **release busy board** command. 5. Issue the **test board** command. This should re-establish the linkage between the internal ID and the port.

CO Demand Diagnostic Test (#3)

For ground start trunks only, port circuit pack relays are operated and checks are made to see if the port can detect and apply ground on the Tip lead. This test also verifies that there is no external ground on the Ring lead. In the absence of other failures, the circuit pack should be replaced only if this test fails with the CO line disconnected.

For the TN2147 World Class Central Office circuit pack, this test also checks the on-board programmable transmission circuitry that allows the circuit pack to support the transmission characteristics of several countries.

Table 3-82. TEST #3 CO Demand Diagnostic Test

Error Code	Test Result	Description/ Recommendation
	ABORT	Could not allocate system resources to run this test. 1. Retry the command at 1-minute intervals a maximum of 5 times.
1000	ABORT	System resources required to run this test are not available. The port may be busy with a valid call. Use the **display port PCSSpp** command to determine the trunk group/member number of the port. Use the **status trunk** command to determine the service state of the port. If the service state indicates that the port is in use, then the port is unavailable for certain tests. You must wait until the port is idle before retesting. 1. If the port status is idle, then retry the command at 1-minute intervals a maximum of 5 times.
1004	ABORT	The port was seized by a user for a valid call. Use the **display port PCSSpp** command to determine the trunk group/member number of the port. Use the **status trunk** command to determine the service state of the port. If the service state indicates that the port is in use, then the port is unavailable for certain tests. You must wait until the port is idle before retesting. 1. If the port status is idle, retry the command at 1-minute intervals a maximum of 5 times.
1005	ABORT	Test inapplicable to present configuration. This is a normal condition.
1018	ABORT	Test has been disabled via administration. 1. Verify that the `Maintenance Tests?` field on the Trunk Group Form is set to **n**. To enable the test, issue the **change trunk-group x** command where "x" equals the number of the trunk group to be tested. Then change the entry in the `Maintenance Tests?` field on the form to **y**.
2000	ABORT	Response to the request was not received within the allowable time period. 1. Retry the command at 1-minute intervals a maximum of 5 times.

Continued on next page

Table 3-82. TEST #3 CO Demand Diagnostic Test — *Continued*

Error Code	Test Result	Description/ Recommendation
	FAIL	Failure to detect ground or faulty ground detected on Ring lead. Display the hardware errors for this trunk, to determine if the fault was on- or-off board. Look for Error Type 1025 or 1281 (if both appear in the Hardware Error Log, pick the most recent error). Error Type 1025 indicates a faulty ground detected on Ring lead (an off-board fault) and Error Type 1281 indicates failure to detect (internally generated) ground (an on-board fault). Faulty ground detected on Ring lead (Error Type 1025): **NOTE:** On TN747B vintage 8 and greater circuit packs, an incoming seizure during this test may cause it to fail with an off-board fault. 1. Repeat test. If test passes, ignore the original failure. If test aborts, follow the recommended procedures. 2. Repeat test with CO line removed. 3. If test fails, replace the circuit pack. 4. If test passes, refer problem to CO. Failure to detect ground (Error Type 1281): 1. Run the long test sequence. If the CO Demand Diagnostic Test fails, the Dial Tone Test (#0) fails with Error Code 2002, AND Error Type 3329 or 3585 appears in the Hardware Error Log (with the same last occurred time as Error Type 1281 and 1537), replace the circuit pack. 2. Repeat test with CO line removed. 3. If test fails, replace the circuit pack. 4. If test passes, the CO may be drawing too much current. Refer problem to CO.
57481	FAIL	On-board test of programmable transmission circuitry failed. 1. Replace the circuit pack.
	PASS	This test verifies that the port is able to apply ground for outgoing calls and detect ground for incoming calls; however, it does not provide information on whether a CO line is actually connected. User-reported troubles on this port should be investigated by using other port tests and by examining trunk or external wiring.

Continued on next page

Table 3-82. TEST #3 CO Demand Diagnostic Test — *Continued*

Error Code	Test Result	Description/ Recommendation
0	NO BOARD	The test could not relate the internal ID to the port (no board). 1. Check to ensure that the board translations are correct. Translate the board, if necessary. 2. Issue the **busyout board** command. 3. Issue the **reset board** command. 4. Issue the **release busy board** command. 5. Issue the **test board** command. This should re-establish the linkage between the internal ID and the port.

NPE Crosstalk Test (#6)

One or more Network Processing Elements (NPEs) reside on each circuit pack with a TDM Bus interface. The NPE controls port connectivity and gain, and provides conferencing functions on a per port basis. The NPE Crosstalk Test verifies that this port's NPE channel talks on the selected time slot and never crosses over to time slots reserved for other connections. If the NPE is not working correctly, one way and noisy connections may be observed. This test is usually only part of a port's long test sequence and takes approximately 20 to 30 seconds to complete.

Table 3-83. TEST #6 NPE Crosstalk Test

Error Code	Test Result	Description/ Recommendation
	ABORT	Could not allocate the necessary system resources to run this test. 1. Retry the command at 1-minute intervals a maximum of 5 times.

Continued on next page

Table 3-83. TEST #6 NPE Crosstalk Test — *Continued*

Error Code	Test Result	Description/ Recommendation
1000	ABORT	The port was seized by a user for a valid call. Use the **display port PCSSpp** command to determine the trunk group/member number of the port. Use the **status trunk** command to determine the service state of the port. If the service state indicates that the port is in use, then the port is unavailable for certain tests. You must wait until the port is idle before retesting. 1. If the port status is active but the port is not in use (no calls), check the error log for error type 1025 (see the Error Log table for a description of this error and required actions). The port may be locked up. Check the CO wiring, check for excessive loop current, and check the trunk translations. (If the trunk is translated incorrectly, this test will abort.) 2. If the port status is idle, busyout and release the trunk, and then retry the command at 1-minute intervals for a maximum of 5 times. 3. If the test still aborts, replace the circuit pack.
1001	ABORT	Could not allocate the necessary system resources to run this test. 1. Retry the command at 1-minute intervals a maximum of 5 times.
1002	ABORT	The system could not allocate time slots for the test. The system may be under heavy traffic conditions or it may have time slots out-of-service due to TDM-BUS errors. Refer to TDM-BUS (TDM-Bus) Maintenance documentation to diagnose any active TDM-BUS errors. 1. If system has no TDM-BUS errors and is not handling heavy traffic, repeat test at 1-minute intervals a maximum of 5 times.
1003	ABORT	The system could not allocate a tone receiver for the test. The system may be oversized for the number of tone detectors present or some tone detectors may be out-of-service. 1. Look for TTR-LEV errors in the Error Log. If present, refer to TTR-LEV Maintenance documentation. 2. Look for TONE-PT errors in the Error Log. If present, refer to TONE-PT Maintenance documentation. 3. If neither condition exists, retry the test at 1-minute intervals a maximum of 5 times.

Continued on next page

Table 3-83. TEST #6 NPE Crosstalk Test — *Continued*

Error Code	Test Result	Description/ Recommendation
1004	ABORT	The port was seized by a valid call during the test. The test has been aborted. Use the **display port PCSSpp** command to determine the trunk group/member number of the port. Use the **status trunk** command to determine the service state of the port. If the service state indicates that the port is in use, then the port is unavailable for certain tests. You must wait until the port is idle before retesting.
2000	ABORT	Response to the test request was not received within the allowable time period.
2100	ABORT	Could not allocate the necessary system resources to run this test. 1. Retry the command at 1-minute intervals a maximum of 5 times..
Any	FAIL	The NPE of the tested port was found to be transmitting in error. This causes noisy and unreliable connections. 1. Replace the circuit pack.
	PASS	The port is correctly using its allocated time slots. User-reported troubles on this port should be investigated by using other port tests and by examining trunk or external wiring.
0	NO BOARD	The test could not relate the internal ID to the port (no board). 1. Check to ensure that the board translations are correct. Translate the board, if necessary. 2. Issue the **busyout board** command. 3. Issue the **reset board** command. 4. Issue the **release busy board** command. 5. Issue the **test board** command. This should re-establish the linkage between the internal ID and the port.

Loop Around and Conference Circuit Test (#33)

This test checks the reflective loop around and conference capabilities of a CO port circuit. The test uses 404-Hz, 1004-Hz, and 2804-Hz tones. Each tone is transmitted separately through the loop and checked.

Table 3-84. TEST #33 Loop Around and Conference Circuit Test

Error Code	Test Result	Description/ Recommendation
	ABORT	Could not allocate the necessary system resources to run this test.
7	ABORT	Conference Circuit Test aborted.
129	ABORT	The 404-Hz reflective loop around test aborted. Response to the test request was not received within the allowable time period.
131		The 1004-Hz reflective loop around test aborted. Response to the test request was not received within the allowable time period.
133		The 2804-Hz reflective loop around test aborted. Response to the test request was not received within the allowable time period. 1. Retry the command at 1-minute intervals a maximum of 5 times.
1000	ABORT	System resources required to run this test are not available. The port may be busy with a valid call. Use the **display port PCSSpp** command to determine the trunk group/member number of the port. Use the **status trunk** command to determine the service state of the port. If the service state indicates that the port is in use, then the port is unavailable for certain tests. You must wait until the port is idle before retesting. 1. If the port status is active but the port is not in use (no calls), check the error log for error type 769 (see the Error Log table for a description of this error and required actions). The port may be locked up. 2. If the port status is idle, retry the command at 1-minute intervals for a maximum of 5 times.
1002	ABORT	The system could not allocate time slots for the test. The system may be under heavy traffic conditions or it may have time slots out-of-service due to TDM-BUS errors. Refer to TDM-BUS Maintenance to diagnose any active TDM-BUS errors. 1. If system has no TDM-BUS errors and is not handling heavy traffic, repeat test at 1-minute intervals a maximum of 5 times.
1003	ABORT	The system could not allocate a tone receiver for the test. The system may be oversized force. 1. Look for TTR-LEV errors in the Error Log. If present, refer to TTR-LEV Maintenance documentation. 2. Look for TONE-PT errors in the Error Log. If present, refer to TONE-PT Maintenance documentation. 3. If neither condition exists, retry the command at 1-minute intervals a maximum of 5 times.

Continued on next page

Table 3-84. TEST #33 Loop Around and Conference Circuit Test — *Continued*

Error Code	Test Result	Description/ Recommendation
1004	ABORT	System resources required to run this test are not available. The port may be busy with a valid call. Use the **display port PCSSpp** command to determine the trunk group/member number of the port. Use the **status trunk** command to determine the service state of the port. If the service state indicates that the port is in use, then the port is unavailable for certain tests. You must wait until the port is idle before retesting. 1. If the port status is idle, retry the command at 1-minute intervals for a maximum of 5 times.
1018	ABORT	The test was disabled via administration. Verify that the 'Maintenance Test' field on the 'Trunk Group' form is set to 'n'. To enable the test, issue the 'change trunk-group x' command (x equals the number of the trunk group to be tested). Then, change the entry in the 'Maintenance Test' field on the form to 'y'. 1. Retry the command at 1-minute intervals a maximum of 5 times.
2000	ABORT	Response to the test was not received within the allowable time period.
2100	ABORT	Could not allocate the necessary system resources to run this test. 1. Retry the command at 1-minute intervals a maximum of 5 times.

Continued on next page

Table 3-84. TEST #33 Loop Around and Conference Circuit Test — *Continued*

Error Code	Test Result	Description/ Recommendation
7,	FAIL	The conference capabilities of the port failed (Error Code 7).
129,		The reflective 404-Hz Tone Test failed. No transmission was detected to or from the port (Error Code 129).
131, or		The reflective 1004-Hz Tone Test failed. No transmission was detected to or from the port (Error Code 131).
133		The reflective 2804-Hz Tone Test failed. No transmission was detected to or from the port (Error Code 133). FAULT ISOLATION: Proceed as follows unless power or tone problems are suspected (see note below). 1. To make sure the problem is on-board, disconnect the port from the CO and retry the test. Coordinate this with the CO, or do it after busy hours; otherwise, the CO may put the connection out of service. 2. If the retry fails, replace the circuit pack. 3. If the retry passes and no troubles have been reported, disable the test. If the retry passes and troubles have been reported, refer the problem to the CO. **NOTE:** If the loop around and conference circuit test fails for all ports on a circuit pack, a -5 volt power problem is indicated. When the tone errors are cleared, rerun the test. If the test fails again, see FAULT ISOLATION above.
	PASS	CO Trunk Loop Around and Conference Test is successful. User-reported troubles on this port should be investigated by using other port tests and by examining trunk or external wiring.
0	NO BOARD	The test could not relate the internal ID to the port (no board). 1. Check to ensure that the board translations are correct. Translate the board, if necessary. 2. Issue the **busyout board** command. 3. Issue the **reset board** command. 4. Issue the **release busy board** command. 5. Issue the **test board** command. This should re-establish the linkage between the internal ID and the port.

Port Audit Update Test (#36)

This test sends updates of the CO port translation for all ports on the circuit pack that have been translated. The update is non-disruptive and guards against possible corruption of translation data contained on the circuit pack. No response message is expected from the circuit pack once it receives translation updates. The port translation data includes: ground or loop start trunk, tone or rotary dialing trunk, rotary dialing inter-digit timing, network balance R/RC, and disconnect timing.

Table 3-85. TEST #36 Port Audit Update Test

Error Code	Test Result	Description/ Recommendation
	ABORT	Could not allocate the necessary system resources to run this test. 1. Retry the command at 1-minute intervals a maximum of 5 times.
1006	ABORT	The port has been placed out of service, perhaps by craft busyout. Use the **display port PCSSpp** command to determine the trunk group/member number of the port. Use the **status trunk** command to determine the service state of the port. If the service state indicates that the port is in use, then the port is unavailable for certain tests. You must wait until the port is idle before retesting. 1. If the port status is idle, retry the command at 1-minute intervals a maximum of 5 times.
2100	ABORT	System resources required to run this test were not available. 1. If the port status is idle, retry the command at 1-minute intervals a maximum of 5 times.
	FAIL	Internal system error 1. Retry the command at 1-minute intervals a maximum of 5 times.
	PASS	This test passed. Translation information was successfully updated on the circuit pack. User-reported troubles on this port should be investigated by using other port tests and by examining trunk or external wiring. If the trunk is busied out, the test does not run, but returns PASS. To verify that the trunk is in-service: 1. Enter **status-command** to verify that the trunk is in-service. If the trunk is in-service, no further action is necessary. If the trunk is out-of-service, continue to Step 2. 2. Enter **release-trunk** command to put the trunk back into in-service. 3. Retry the test command.

Continued on next page

Table 3-85. TEST #36 Port Audit Update Test — *Continued*

Error Code	Test Result	Description/ Recommendation
0	NO BOARD	The test could not relate the internal ID to the port (no board). 1. Check to ensure that the board translations are correct. Translate the board, if necessary. 2. Issue the **busyout board** command. 3. Issue the **reset board** command. 4. Issue the **release busy board** command. 5. Issue the **test board** command. This should re-establish the linkage between the internal ID and the port.

Transmission Test (#844-848)

This test is non-destructive.

NOTE:
Tests #844-848 are not supported on a International switch.

These tests are run by the Automatic Transmission Measurement System (ATMS). They are not part of the long or short trunk test sequences. Instead, they are run on demand with the **test analog-testcall** command or as part of ATMS scheduled testing.

The test call attempts to seize a port and make a call to a terminating test line (TTL) on the trunk's far end. Transmission performance measurements are made and compared to administered thresholds. Errors are generated when results fall outside of ''marginal'' or ''unacceptable'' thresholds. Detail and summary measurement reports are obtainable via the **list testcalls** command.

Table 3-86. TEST #844-848 Transmission Test

Error Code	Test Result	Description/ Recommendation
1000	ABORT	System resources required to run this test are not available. The port may be busy with a valid call. Use **display port PCSSpp** to determine the trunk group/member number of the port. Use the **status trunk** command to determine the service state of the port. If the service state indicates that the port is in use, then the port unavailable for this test. You must wait until the port is idle before retesting. 1. If the port status is idle, then retry the command at 1-minute intervals a maximum of 5 times.
1001	ABORT	Could not allocate the necessary system resources to run this test. 1. Retry the command at 1-minute intervals a maximum of 5 times.
1002	ABORT	The system could not allocate timeslots for the test. The system may be under heavy traffic conditions or it may have timeslots out of service due to TDM bus errors. Refer to TDM Bus Maintenance to diagnose any active TDM bus errors. 1. If system has no TDM bus errors and is not handling heavy traffic, repeat test at 1-minute intervals a maximum of 5 times.
1004	ABORT	The port has been seized by a user for a valid call. Use status trunk to determine when the port is available for testing. 1. Retry the command at 1-minute intervals a maximum of 5 times. 2. If the test continues to abort and the port is not in use, escalate the problem.
1005	ABORT	Trunk has been administered as incoming-only; transmission tests can only be run on outgoing trunks.
1115	ABORT	The near end test line could not be allocated. 1. Verify that the TN798 circuit pack's port 1 is administered and in service with the **status port** command. 2. Retry the command at 1-minute intervals a maximum of 5 times.
1900	ABORT	The test completion message was not received from the TN798 circuit pack. 1. Test the TN798 circuit pack.
1901	ABORT	This error occurs when the TN798 circuit pack uplinks a message that is not the proper response for this test. The anticipated uplink messages are seize, ring or answer. 1. Verify that the Trunk is administered properly.

Continued on next page

Table 3-86. TEST #844-848 Transmission Test — *Continued*

Error Code	Test Result	Description/ Recommendation
1905	ABORT	Intercept tone detected from far end. 1. Get the test line data and verify it with the far end. Dial the test number manually to see if the TTL is reached. If it is not, then either the number is wrong, or the far end is administered incorrectly.
1906	ABORT	Reorder tone detected from far end. 1. See actions for error code 1905.
1907	ABORT	Other unexpected tone detected from far end. 1. See actions for error code 1905.
1913	ABORT	Audible Ring detected from far end. 1. See actions for error code 1905.
1914	ABORT	Unidentified interrupted tone detected from far end. 1. See actions for error code 1905
1915	ABORT	Busy tone detected from far end. 1. Since the test line at the far end was busy. Try the test again. 2. If the test continues to abort, the problem is with the far end system.
1918	ABORT	Test progress tone not removed from far end (type 105 test line only). 1. The problem is with the far end system; a technician at the far end should test the test line.
1919	ABORT	Unexpected far end release 1. The problem is with the far end system; a technician at the far end should test the test line.
1920	ABORT	No response from far end. 1. The problem is with the far end system; a technician at the far end should test the test line.
1921	ABORT	No data returned from far end. 1. The problem is with the far end system; a technician at the far end should test the test line.
1922	ABORT	Steady, unidentifiable tone from far end 1. See actions for error code 1905.
1923	ABORT	Broadband energy detected from far end (such as voice or announcement). 1. See actions for error code 1905.

Continued on next page

Table 3-86. TEST #844-848 Transmission Test — *Continued*

Error Code	Test Result	Description/ Recommendation
1924	ABORT	No test tone from far end 1. See actions for error code 1905.
1938	ABORT	Near-end self test failed. 1. Test the TN798 circuit pack.
1939	ABORT	Loss self check at 0dBm at 1004 Hz failed. 1. Test the TN798 circuit packs. 2. If the test continues to abort escalate the problem.
1940	ABORT	Far end noise self check failed. 1. The problem is with the far end system; a technician at the far end should test the test line.
1941	ABORT	High frequency singing return loss self check failed. 1. Test the TN798 circuit packs.
1942	ABORT	Echo return loss self check failed. 1. Test the TN798 circuit packs.
1943	ABORT	Singing return loss self check failed. 1. Test the TN798 circuit packs.
1944	ABORT	Loss self check at -16 dBm at 1004 Hz failed. 1. Test the TN798 circuit packs
1945	ABORT	Loss self check at -16 dBm at 404 Hz failed. 1. Test the TN798 circuit packs.
1946	ABORT	Loss self check at -16 dBm at 2804 Hz failed. 1. Test the TN798 circuit packs.
1947	ABORT	Noise with tone self check failed. 1. Test the TN798 circuit packs.
2000	ABORT	The test timed out while waiting for a response from the TN798 circuit pack. 1. Retry the command at 1-minute intervals a maximum of 5 times.
2012	ABORT	An internal software error occurred. 1. Retry the command at 1-minute intervals a maximum of 5 times.
2053	ABORT	The test call could not be established, but no information on why is available. 1. Retry the command at 1-minute intervals a maximum of 5 times.

Continued on next page

Table 3-86. TEST #844-848 Transmission Test — *Continued*

Error Code	Test Result	Description/ Recommendation
2056	ABORT	An error occurred while trying to obtain results from the TN798 circuit pack. 1. Test the TN798 circuit pack.
	FAIL	Measured transmission performance was in the unacceptable range as administered on the trunk group form. Retrieve a measurement report via the **list testcalls** command. Make sure that ATMS thresholds are set properly on page 4 of the trunk group form. Besides the facility, test failures can be caused by faulty test lines or switch paths. If the measurements point to a facility problem, report the results to the trunk vendor.
8000	FAIL	Measured transmission performance was in the marginal range as administered on the trunk group form. This generally means that the trunk is usable but has an undesirable amount of noise or loss. If the user does not report unacceptable effects, it may not be necessary to take any action. Retrieve a measurement report via the **list testcalls** command. Make sure that ATMS thresholds are set properly on page 4 of the trunk group form.

CONFIG (System Configuration)

MO Name (in Alarm Log)	Alarm Level	Initial Command to Run	Full Name of MO
CONFIG	none	none	System Configuration

The System Configuration maintenance object (MO) oversees logical insertion and removal of circuit packs in the system. When Switch Control detects that a circuit pack is present in a port slot, it informs System Configuration and System Configuration queries the circuit pack to determine the type and vintage of the circuit pack. Similarly, when Switch Control detects that a circuit pack has been removed from a port slot, it informs System Configuration.

There are no alarms or tests for System Configuration, but three types of errors are logged to the Hardware Error Log (see below).

Hardware Error Log Entries and Test to Clear Values

Error Type	Aux Data	Associated Test	Alarm Level	On/Off Board	Test to Clear Value
0[1]	0	Any	Any	Any	none
2-117(a)	0-2	none			
257(b)		none			
1002-1117(c)	0-2	none			

1. Run the Short Test Sequence first. If all tests pass, run the Long Test Sequence. Refer to the appropriate test description and follow the recommended procedures.

Notes:

a. This error indicates that a Port circuit pack in the system did not respond to a circuit pack type inquiry. Follow the procedures outlined in (c) to determine if there is an error.

b. This error indicates that less than 25% of Trunk Group is available.

c. This error indicates that a Port circuit pack in the system did not respond to a vintage inquiry.

As a result of either of these errors, a Port circuit pack may be physically inserted in a Port slot, but the system may not recognize it.

CUST-ALM (Customer-Provided Alarming Device)

MO Name (in Alarm Log)	Alarm Level	Initial Command to Run[1]	Full Name of MO
CUST-ALM	none	test customer-alarm PC	Customer-Provided Alarming Device

1. Where PC is an appropriate port network number and carrier.

The system provides customers a way to connect their own alarm indication device to a switch. The CUST-ALM maintenance object represents this Customer-Provided Alarming Device (CPAD). When an alarm occurs at least to the level to which the CPAD is administered, the CPAD in the Processor Port Network (PPN)is activated. The CPAD is administered by the Maintenance-Related System-Parameters Form (CPE Alarm Activation Level field). The CPAD is connected to the Processor circuit pack. The valid levels to which to set the CPE Alarm Activation Level are: *none, warning, minor,* or *major.* The CPAD is also activated within a cabinet whenever Emergency Transfer is invoked within that cabinet. The CUST-ALM MO is not maintained by the system and does not generate any alarms. If a problem is suspected with the CPAD, it may be tested using the **test customer-alarm** command, which activates the device by closing the relay on the Processor circuit pack for 1 minute. The repeat parameter may be used to close the relay for a longer length of time (5 minutes is the suggested repeat value).

The CPAD is also activated within a cabinet whenever Emergency Transfer is invoked within that cabinet. The CUST-ALM MO is not maintained by the system, and does not generate any alarms. If a problem is suspected with the CPAD, it may be tested using the **test customer-alarm** command, which activates the device by closing the relay on either the Processor circuit pack for 1 minute. The repeat parameter may be used to close the relay for a longer length of time (5 minutes is the suggested repeat value).

Error Log Entries and Test to Clear Values

Error Type	Aux Data	Associated Test	Alarm Level	On/Off Board	Test to Clear Value
none	none	none			

System Technician-Demanded Tests: Descriptions and Error Codes

There are no errors associated with the CPAD CUST-ALM MO. The **test customer-alarm PC** command is provided to allow a technician to check that the customer-provided alarming device is correctly installed and functional. It is recommended that this test be run at least once after both the switch and the customer alarm have been installed.

Always investigate tests in the order presented in the table below when inspecting errors in the system. By clearing error codes associated with the *Customer-Provided Alarming Device Test*, for example, you may also clear errors generated from other tests in the testing sequence.

Order of Investigation	Short Test Sequence	Long Test Sequence	D/ND[1]
Customer-Provided Alarming Device Test (#115)	X	X	ND

1. D = Destructive; ND = Nondestructive

Customer-Provided Alarming Device Test (#115)

This test closes the relay that activates the CPAD for 1 minute only within the port network specified. If it takes longer than 1 minute to check that the CPAD has been activated, the Repeat field on the **test customer-alarm PC** command can be used to close the relay for up to 99 minutes. Note that when the repeat option is used, the results for Test #115 come back immediately and, for each test that passed, the CPAD is kept on for that many minutes. The CPAD does not go off after 1 minute and then come back on. Instead, the CPAD is kept on continuously for the entire time. If the CPAD is being activated and deactivated in a flickering fashion, there is a problem with either the CPAD or the Processor circuit pack.

Table 3-87. TEST #115 Customer-Provided Alarming Device Test

Error Code	Test Result	Description/Recommendation
(blank) 1000 2029	ABORT	Internal system error 1. Try the command at 1-minute intervals a maximum of 5 times.
	PASS	The switch software successfully sent the request to the Processor circuit pack to turn on the CPAD. The CPAD must be physically inspected to verify that it is working. If the CPAD is working and the customer has complained that the CPAD did not indicate a system alarm when it occurred, then check the administered levels for turning on the CPAD via the Display System-Parameter Maintenance screen form. Compare these levels with the customer's specifications. If Test #115 passes, and the CPAD is not being activated, check the connection of the CPAD to the Processor circuit pack. If the CPAD can be activated but cannot be deactivated, first check to make sure Emergency Transfer is not activated in the affected port network via the **status system** command. Emergency Transfer can be forced to manual OFF by the Emergency Transfer switch on the Processor circuit pack. If Emergency Transfer is OFF and the CPAD still cannot be deactivated, check the administered levels for the CPAD with the Display System-Parameter Maintenance screen form and compare against the alarm levels currently present in the system (**display alarms** command).

DATA-BD (Data Channel Processor Circuit Pack)

MO Name (in Alarm Log)	Alarm Level	Initial Command to Run	Full Name of MO
DATA-BD	WARNING	test network-control	Network Control Circuit Pack
DATA-BD	MINOR	test network-control	Network Control Circuit Pack
DATA-BD	WARNING	test network-control	Network Control Circuit Pack

The DATA-BD is a generic hardware that supports the Data Channels on the Processor circuit pack. All circuit packs that have an interface with the TDM Bus have a common set of generic hardware that provides the TDM Bus interface. Consequently, these circuit packs share a common set of tests that verify the integrity of the generic hardware. The circuit packs and common set of tests that they share are described in XXX-BD (Common Port Circuit Pack) Maintenance documentation. Because the Processor circuit pack has this common set of hardware, it is classified in the XXX-BD Maintenance documentation as a service port circuit pack.

The DATA-BD MO is different from other XXX-BD MO in that the DATA-BD MO is always inserted (because it is part of the Processor circuit pack). Also because the DATA-BD MO is part of the Processor circuit pack, some board commands do not apply to this MO. To access the DATA-BD MO, use the **test network-control [short | long]** command.

Error Log Entries and Test to Clear Values

Table 3-88. Data Channel Processor Circuit Pack Error Log Entries

Error Type	Aux Data	Associated Test	Alarm Level	On/Off Board	Test to Clear Value
0[1]	0	Any	Any	Any	test data-module <ext> sh r 1
1 (a)	0	Data Channel Reset Test (#107)	MINOR	ON	test data-module <ext> l
23 (b)	0	None	WNG	OFF	
257	Any	Control Channel Test (#52)	MINOR	ON	test network-control [a | b] sh r 20
257 (c)	0	None			
513 (d)	Any	None			

Continued on next page

Table 3-88. Data Channel Processor Circuit Pack Error Log Entries — *Continued*

Error Type	Aux Data	Associated Test	Alarm Level	On/Off Board	Test to Clear Value
769 (e)	4358	None			
1025 (f)	4363	NPE Audit Test (#50)			test network-control [a | b] sh
1538 (g)		Data Channel Reset Test (#107)	MINOR	ON	test data-module <ext> l
3840 (h)	Any	None			
3999(i)	Any	None			

1. Run the Short Test Sequence first. If all tests pass, run the Long Test Sequence. Refer to the appropriate test description and follow the recommended procedures.

Notes:

a. This error indicates the DATA-BD portion of the Processor circuit pack stopped functioning. Since the Processor circuit pack cannot be reset via the **reset board PCSS** command, the Data Channel Reset Test (#107) in the Long Test Sequence for the DATA-CHLs must be used to reset it as follows:

1. Issue the **list data** command to determine if one, or more, Data Channels (DATA-CHLs) is administered.

NOTE:
A Data Channel (DATA-CHL) is identified by a "type" value of "netcon."

2. If a Data Channel (DATA-CHL) is not administered, use the **add data-module [<ext> | next]** command to administer a DATA-CHL.
3. From the form resulting from the **list data** command, choose a Data Channel (DATA-CHL).
4. Issue the **test data-module <ext> long** command using the extension for the DATA-CHL chosen in Step 3.

WARNING:
Issuing this command drops all data channel extensions. See DATA-CHL (Data Channel) Maintenance documentation first.

If the red LED stays on, then replace the Processor circuit pack.

b. The circuit pack has been logically administered but not physically installed. The alarm is cleared when the circuit pact is installed.

c. This error indicates transient communications problems with this circuit pack. This error is not service-affecting and no action is required.

d. This error indicates the circuit pack has reported a hardware failure on the circuit pack. The circuit pack should be replaced.

e. This error can be ignored, but look for other errors on this circuit pack.

f. This error is not service-affecting and no action is required.

g. This error indicates the DATA-BD portion of the Processor circuit pack is out-of-service. Since the Processor circuit pack cannot be reset via the **reset board PCSS** command, the Data Channel Reset Test (#107) in the Long Test Sequence for the DATA-CHL must be used to reset it as follows:

   1. Issue the **list data** command to determine if one or more Data Channels (DATA-CHLs) are administered.

      NOTE:
      A Data Channel (DATA-CHL) is identified by a "type" value of "netcon."

   2. If a Data Channel (DATA-CHL) is not administered, use the **add data-module [<ext> | next]** command to administer a DATA-CHL.

   3. From the form resulting from the **list data** command, choose a Data Channel (DATA-CHL).

      - Refer to “DATA-CHL” before issuing the **test network-control long** command to determine if CDR, System Printer, Journal Printer, and/or PMS Links are using the DATA-CHLs and how to busyout these links prior to running destructive tests on the DATA-CHLs.

      - Refer to “SW-CTL” before issuing the **reset switch-control** command to determine the consequences of running the Switch Control Reset Test (Test #93).

   4. Issue the **test data-module <ext> long** command using the extension for the DATA-CHL chosen in Step 3.

      If the error happens again within 15 minutes, then replace the circuit pack.

h. This error is not service-affecting and no action is required.

i. Error type 3999— Indicates that the circuit pack sent a large number of control channel messages to the switch within a short period of time. If error type 1538 is also present, then the circuit pack was taken out-of-service due to hyperactivity. If error type 1538 is not present, then the circuit pack has not been taken out-of-service, but it has generated 50% of the messages necessary to be considered hyperactive. This may

be completely normal during heavy traffic periods. However, if this error type is logged when the circuit pack is being lightly used, it may indicate a problem with the circuit pack or the equipment attached to it.

System Technician-Demanded Tests: Descriptions and Error Codes

Always investigate tests in the order presented in the table below. By clearing error codes associated with the *NPE Audit Test*, for example, you may also clear errors generated from other tests in the testing sequence.

Order of Investigation	Short Test Sequence	Long Test Sequence	D/ND[1]
NPE Audit Test (#50) (a)		X	ND
Control Channel Loop Around Test (#52)	X	X	ND

1. D = Destructive; ND = Nondestructive

Note:

a. Refer to “DATA-CHL” and “SW-CTL” for other tests associated with DATA-BD maintenance.

NPE Audit Test (#50)

The system sends a message to the on-board microprocessor to update the network connectivity information for all the NPEs on the circuit pack.

Table 3-89. TEST #50 NPE Audit Test

Error Code	Test Result	Description/Recommendation
	ABORT	Could not allocate the necessary system resources to run this test.
2100	ABORT	Could not allocate the necessary system resources to run this test.
1019	ABORT	Test already in progress.
	FAIL	Internal system error 1. Retry the command at 1-minute intervals a maximum of 5 times.
	PASS	The circuit pack’s NPEs have been updated with their translation.

Control Channel Loop Around Test (#52)

This test queries the circuit pack for its circuit pack code and vintage and verifies its records.

Table 3-90. TEST #52 Control Channel Loop Around Test

Error Code	Test Result	Description/Recommendation
	ABORT	Could not allocate the necessary system resources to run this test.
	FAIL	Internal system error 1. Retry the command at 1-minute intervals a maximum of 5 times.
	PASS	Communication with this circuit pack is successful.

DATA-CHL (Data Channel)

MO Name (in Alarm Log)	Alarm Level	Initial Command to Run	Full Name of MO
DATA-CHL[1]	MINOR	test data-module l <ext>	Data Channel
DATA-CHL[2]	WARNING	test data-module sh <ext>[3]	Data Channel

1. The **test data-module <ext> long** command drops all sessions on all of the Data Channels. Refer to Data Channel Reset Test (#107).
2. <ext> is the extension of the Data Channel to be tested. The extension can be determined by issuing the **list data-module** command from the administration terminal. The resulting form provides a mapping from the 1CXXpp designation of the Data Channel to its corresponding extension, where pp indicates which one of the four Data Channels is alarmed (01, 02, 03, or 04) and C indicates the carrier on which the alarmed Data Channel resides.
3. The **test data-module <ext> long** command drops all sessions on all of the Data Channels. Refer to Data Channel Reset Test (#107).

The four Data Channels (DATA-CHLs) provide a data communications interface that allows data terminal equipment connected to port circuit packs to communicate with software applications running on the system. Each DATA-CHL represents a dial-up/dial-out asynchronous communications port that interfaces to the TDM Bus. Data is transported between the terminal equipment and the software application over the DATA-CHL. Data Channels may be used to support the following features and functions:

- Establishment of a connection over which to log CDR data to a printer or other storage unit. This connection is called PRI-CDR/SEC-CDR (PRI-CDR Link).
- Establishment of connections over which to log PMS, Automatic Wakeup, and Emergency Access to Attendant data to a Journal printer. This connection is called PMS-PRINT/JRNL-PRNT (PMS Printer Link).
- Establishment of a connection to a customer-owned PMS. This connection is called the PMS-LINK.
- Establishment of a connection to system printer. This connection is called the System Printer Link (SYS-PRNT).
- Establishment of connection(s) for up to two secondary administration terminals.
- Saving announcements from the ANN-BD (Announcement Circuit Pack).
- Restoring announcements to the ANN-BD (Announcement Circuit Pack).
- Maintenance testing of the DATA-CHLs.

From the viewpoint of administration, the four DATA-CHLs on the TN798 Processor circuit pack are numbered 01 through 04. Each DATA-CHL may be

assigned a unique extension using the **add data-module [<ext> | next]** command. These extensions are called *active* extensions. When assigning an active extension to a DATA-CHL XX (where XX is 01, 02, 03, or 04) the Add Data-Module form also requires the user to assign a unique *maintenance* extension. The maintenance extension is required.

1. Determine if CDR, System Printer, Journal Printer, and/or PMS Links are using the DATA-CHLs and busyout these links if it is necessary to use the **test network-control long** command.
2. Refer to ''SW-CTL (Switch Control)'' Maintenance documentation before executing the **reset switch-control** command to determine the consequences of running the Switch Control Reset Test (Test #93).
3. Refer to ''IO-PROCR (I/O Processor)'' Maintenance document before executing the **reset io-processor** command to determine the consequences of resetting the IO Processor.

Status of Data Channels

In order to perform maintenance testing on the DATA-CHLs, the DATA-CHLs cannot be busy with one of the functions described previously. A series of system technician commands can be used to determine if the DATA-CHLs are busy and, if so, to determine the function for which they are being used. This series of system technician commands is described below and should be done before testing the DATA-CHLs.

Issue the **list data-module** command to determine the extensions for the administered Data Channels.

NOTE:
A Data Channel is identified by a "type" value of "netcon."

For each Data Channel, determine if the DATA-CHL is busy by issuing the **status data-module <ext>** command using the DATA-CHL's extension. If the DATA-CHL is busy, the Service State field in the resulting form will be in service/active. However, the form does not indicate the reason the DATA-CHL is busy. This must be determined using other system technician commands.

Use the procedures below to determine whether busy Data Channels are being used for CDR, Journal Printer, or PMS Links. If a DATA-CHL is busy with one of these links then, in order to test the DATA-CHL, the link must be busied out using **busyout smdr-link**, **busyout journal-printer wakeup-log**, **busyout journal-printer pms-log**, or **busyout pms-link** command, respectively. Do not issue any of these busyout commands unless instructed to do so while investigating Error Codes according to the "System Technician-Demanded Tests: Descriptions and Error Codes" subsection. If one of these links must be busied out to perform maintenance testing, restore the link to service according to PRI-CDR/SEC-CDR (PRI-CDR Link), PMS-PRNT/JNL-PRNT (PMS Printer Link), and PMS-LINK Maintenance documentation, respectively.

If a DATA-CHL is busy but is not being used for one of these links, then it is being used for a secondary administration terminal connection or for maintenance testing. If it is being used for a secondary administration terminal connection, then in order to test the DATA-CHL that the connection is using, the DATA-CHL must be busied out using the **busyout data-module <ext>** command.

NOTE:
The **busyout data-module <ext>** command causes the connection over the associated DATA-CHL to be dropped. Do not issue this command unless instructed to do so.

If the DATA-CHL must be busied out in order to perform maintenance testing, the secondary administration terminal connection must be re-established by redialing the DATA-CHL.

CDR Links

1. Issue the **status smdr-link** command to see if an CDR Link has been established. If the `Link State` field is `Up`, then the CDR Link may be using one of the Data Channels (DATA-CHLs).
2. Issue the **display system features** command and go to the CDR subsection on Page 2 of the resulting form. Note the values in the Primary Output Extension and Secondary Output Extension fields. If the values are extensions, then the CDR Link is using one of the Data Channels (DATA-CHLs).
3. For each of the extensions in the Primary Output Extension and Secondary Output Extension fields, issue the **status data-module <ext>** command using the extension. Note the value in the Connected Ports field of the resulting form. If there is a port value in the field, then the indicated port is a Data Channel (DATA-CHL).
4. Issue the **list data-module** command, locate each port indicated in the Connected Ports fields, and determine if that port has a "type" value of "netcon." If so, then there is an CDR Link over that DATA-CHL.

System Printer Links

1. Issue the **status sp-link** command to see if a System Printer Link has been established. If the `Link State` field is `Up`, then the System Printer Link may be using one of the Data Channels (DATA-CHLs).
2. Issue the **display system features** command and go to the System Printer subsection on Page 2 of the resulting form. Note the values in the Primary Output Extension and Secondary Output Extension fields. If the values are extensions, then the System Printer Link is using one of the Data Channels (DATA-CHLs).

3. For each of the extensions in the Primary Output Extension and Secondary Output Extension fields, issue the **status data-module <ext>** command using the extension. Note the value in the Connected Ports field of the resulting form. If there is a port value in the field, then the indicated port is a Data Channel (DATA-CHL).
4. Issue the **list data-module** command, locate each port indicated in the `Connected Ports` fields, and determine if that port has a "type" value of `netcon`. If so, then there is a System Printer Link over that DATA-CHL.

Journal Printer Links

1. Issue the **status journal-link wakeup-log** and **status journal-link pms-log** commands to see if one or both of these Journal Printer Links have been established. If the `Link State` field is `Up` for either of these, then that Journal Printer Link may be using one of the Data Channels (DATA-CHLs).
2. Issue the **display system hospitality** command and note the values in the Extension of Journal/System Printer and Extension of PMS Log Printer fields. If either of these values are extensions, then that Journal Printer Link is using one of the Data Channels (DATA-CHLs).
3. For each of the extensions in the Extension of Journal/Schedule Printer and Extension of PMS Log Printer fields, issue the **status data-module <ext>** command using the extension. Note the value in the `Connected Ports` field of the resulting form. If there is a port value in the field, then the indicated port is a Data Channel (DATA-CHL).
4. Issue the **list data-module** command, locate each port indicated in the `Connected Ports` fields, and determine if that port has a "type" value of `netcon`. If so, then there is a Journal Printer Link over that DATA-CHL.

PMS Link

1. Issue the **status pms-link** command to see if a PMS Link has been established. If the `Link State` field is `Up`, the PMS Link may be using one of the Data Channels (DATA-CHLs).
2. Issue the **display system hospitality** command and note the value in the Extension of the `PMS` field. If this value is an extension, the PMS Link is using one of the Data Channels (DATA-CHLs).
3. For the extension in the Extension of PMS field, issue the **status data-module <ext>** command using the extension. Note the value in the `Connected Ports` field of the resulting form. If there is a port value in the field, the indicated port is a Data Channel (DATA-CHL).
4. Issue the **list data-module** command, locate the port indicated in the `Connected Ports` field, and determine if that port has a "type" value of `netcon`. If so, there is a PMS Link over that DATA-CHL.

Error Log Entries and Test to Clear Values

Table 3-91. Data Channel Error Log Entries

Error Type	Aux Data	Associated Test	Alarm Level	On/Off Board	Test to Clear Value
0[1](a)	0	Any	Any	Any	test data-module <ext> sh r 1
1	Any	Local Loop Back Test (#111)	MINOR	ON	test data-module <ext> sh r 3
18	0	busyout data-module <ext>	WARNING	OFF	release data-module <ext>
130		None	WARNING	ON	test data-module <ext> sh
257	Any	Remote Maintenance Loop Around Test (#109)	MINOR	ON	test data-module <ext> sh r 5
513	Any	Crosstalk Test (#110)	MINOR	ON	test data-module <ext> sh r 3
769	Any	Dual Port RAM Test (#108)	MINOR	ON	test data-module <ext> l r 3

1. Run the Short Test Sequence first. If all tests pass, run the Long Test Sequence. Refer to the appropriate test description and follow the recommended procedures.

Notes:

a. This error type indicates that the circuit pack has been removed or has been insane for more than 11 minutes. To clear the error, reinsert or replace the circuit pack.

System Technician-Demanded Tests: Descriptions and Error Codes

There are two system technician test commands that include the Data Channels (DATA-CHLs). The **test data-module <ext> [short | long]** command tests the single DATA-CHL that has the extension specified by <ext>. The **test network-control [short | long]** command tests each administered DATA-CHL that resides on the Processor circuit pack in the specified carrier.

Always investigate tests in the order presented in the following tables when inspecting errors in the system. By clearing error codes associated with the *Data Channel Reset Test,* for example, you may also clear errors generated from other tests in the testing sequence.

Order of Investigation	Short Test Sequence	Long Test Sequence	D/ND[1]
Data Channel Reset Test (#107) (a)		X	D
Data Channel Dual Port Ram Test (#108) (a)		X	D
Data Channel Remote Maintenance Loop Around Test (#109)	X	X	ND
Data Channel Local Loop Back Test (#111)	X	X	ND
Data Channel Crosstalk Test (#110)	X	X	ND

1. D = Destructive; ND = Nondestructive

Note:

a. Determine if CDR, System Printer, Journal Printer, and/or PMS Links are using the DATA-CHLs and busyout these links if it is necessary to use the **test network-control long** command.

Table 3-92. System Technician-Demanded Tests: DATA-CHL

Order of Investigation	Short Test Sequence	Long Test Sequence	D/ND[1]
Control Channel Test (Common Port Circuit Pack) (#52) (a)		X	ND
NPE Audit Test (Common Port Circuit Pack) (#50) (a)	X	X	ND
Data Channel Reset Test (#107)		X	D
Data Channel DPR Test (#108)		X	D
Data Channel Maintenance Loop Around Test (#109)	X	X	ND
Data Channel Crosstalk Test (#110)	X	X	ND
Data Channel Local Loop Back Test (#111)	X	X	ND
Switch Control Reset Test (#93) (b) (d)			D
Time-of-Day Clock Test (#95) (b)	X	X	ND
Control Channel Interface Test (#92) (b)	X	X	ND
Control Channel Transmission Test (#94) (b)	X	X	ND
12 Volt Power Supply Test (#701) (c)	X	X	ND
Memory Card Insertion Test (#695) (c)	X	X	ND
Memory Card Format and Read Test (#696) (c)	X	X	ND
Memory Card Match Test (#697) (c)	X	X	ND

Continued on next page

Table 3-92. System Technician-Demanded Tests: DATA-CHL — *Continued*

Order of Investigation	Short Test Sequence	Long Test Sequence	D/ND[1]
Memory Card Write-Protected Test (#698) (c)	X	X	ND
Memory Card Directory Recovery Test (#699) (c)	X	X	ND
Memory Card Translation Data Integrity Test (#694) (c)		X	ND
Memory Card Erase/Write/Read Test (#693) (c)	X		ND

1. D = Destructive, ND = Non-destructive

Notes:

a. Refer to DATA-BD (Network Control Circuit Pack) Maintenance documentation for a description of these tests.

b. Refer to SW-CTL (Switch Control) Maintenance documentation for a description of these tests.

c. Refer to CARD-MEM for information on this test.

d. This test is only run as part of the **reset switch-control** command.

Data Channel Reset Test (#107)

This test is destructive.

This test resets the entire data communications interface provided by the four DATA-CHLs. All existing connections over the DATA-CHLs are dropped.

Table 3-93. TEST #107 Data Channel Reset Test

Error Code	Test Result	Description/Recommendation
1000	ABORT	System resources required to run this test are not available. 1. Try the command at 1-minute intervals a maximum of 5 times.

Continued on next page

Table 3-93. TEST #107 Data Channel Reset Test — *Continued*

Error Code	Test Result	Description/Recommendation
2100	ABORT ABORT	System resources required for this test are unavailable. An ABORT has one of two different meanings: 1. System resources required to run this test are not available. 2. Internal system error
10704	ABORT	Internal system error 1. Try the command at 1-minute intervals a maximum of 5 times.
Any	FAIL	The circuit pack failed to reset. 1. Execute the command again. 2. If the problem persists, replace the Processor circuit pack. After the Processor circuit pack has been replaced, its Time-of-Day clock must be set using the **set time** command.
	PASS	The circuit pack initializes correctly.

Data Channel Dual Port RAM Test (#108)

This test is destructive.

This is a coordinated test of the dual port RAM that is shared between the hardware and software. Control messages and data are passed through this dual port RAM to establish and tear down connections over the DATA-CHLs. This test requests each side to read and write the dual port RAM, first one at a time and then simultaneously in alternate locations.

This test prevents any control stimuli from being received from or sent to the TDM Bus control channel preventing the establishment of new connections over the DATA-CHLs. However, existing connections are not (and cannot) be dropped.

Table 3-94. TEST #108 Data Channel Dual Port RAM Test

Error Code	Test Result	Description/Recommendation
1000	ABORT	System resources required to run this test are not available. 1. Retry the command at 1-minute intervals a maximum of 5 times.

Continued on next page

Table 3-94. TEST #108 Data Channel Dual Port RAM Test — *Continued*

Error Code	Test Result	Description/Recommendation
	FAIL	The dual port RAM is not functioning correctly. Either the software cannot correctly read from it and/or write to it or the hardware cannot correctly read from it and/or write to it. Connections cannot be established over the DATA-CHLs. 1. Execute the command again. 2. If the problem persists, replace the Processor circuit pack. After the Processor circuit pack has been replaced, its Time-of-Day clock must be set using the **set time** command.
	PASS	The dual port RAM is functioning. Connections can be established over the DATA-CHLs.

Data Channel Remote Maintenance Loop Around Test (#109)

This test verifies the integrity of the entire DATA-CHL (that is, the software, dual port RAM, and hardware that compose it). It verifies that a connection can be established over the DATA-CHL and that the DATA-CHL can correctly send and receive data over the connection (that is, over the TDM Bus). The test actually involves two DATA-CHLs: the DATA-CHL that is the target of the test and a second, arbitrary, unbusy DATA-CHL. A connection is set up by placing a call out from the arbitrary DATA-CHL and into the target DATA-CHL. Data is looped over the connection in each direction (that is, the target DATA-CHL is tested as both a sender of data and a receiver of data). The test checks that the data received by one DATA-CHL is the same as the data that was sent by the other DATA-CHL.

Because it establishes a connection between two Data Channels (DATA-CHLs) across the TDM Bus, this test does more than just verify the integrity of the target DATA-CHL. It also verifies the integrity of the TDM Bus and Tone-Clock circuit pack (by sending and receiving data).

If this test aborts or fails, it is impossible to determine from this test alone whether the defective DATA-CHL is the target DATA-CHL or the arbitrarily chosen DATA-CHL, or if the problem lies with the TDM Bus, or Tone-Clock circuit pack. The results of running Tests #107, #108, #110, and #111 on the DATA-CHL can be used to determine whether the target DATA-CHL is defective.

NOTE:
If an Error Code is encountered recommending that an CDR, System Printer, Journal Printer, and/or PMS Link be busied out, restore each busied

out link to service according to PRI-CDR/SEC-CDR (PRI-CDR Link), SYS-PRNT (System Printer Link), JNL-PRNT (Journal Printer Link), or PMS-PRNT/JNL-PRNT (PMS Printer Link) Maintenance documentation, respectively, before concluding work on the problem.

Table 3-95. TEST #109 Data Channel Remote Maintenance Loop Around Test

Error Code	Test Result	Description/Recommendation
4	ABORT	For this test, an Error Code of 4 can have 2 different meanings: a. The target DATA-CHL is busy and, therefore, not available for use. b. Internal system error Note the results of Tests #110 and #111 in the Short Test Sequence for the target DATA-CHL. If the results of Tests #110 and #111 are both PASS, then there is a high probability that the target DATA-CHL is not defective. Proceed with the remaining steps **only if it is necessary to completely test the target DATA-CHL:** 1. Determine if the target DATA-CHL is in use for some other function (that is, CDR Link, System Printer Link, Journal Printer Link, PMS Link, or secondary administration terminal connection) as described previously in the "Status of Data Channels" section. If so, check for errors on the function that is using the DATA-CHL. If there are no errors, there is a high probability that the DATA-CHL is not defective. Proceed with the remaining steps **only if it is necessary to completely test the target DATA-CHL.** 2. If the target DATA-CHL is in use for some other function, busyout the function (CDR Link, System Printer Link, Journal Printer Link, PMS Link) or the DATA-CHL (secondary administration terminal connection **only**). 3. Retry the command at 1-minute intervals a maximum of 5 times.Restore any busied out CDR, System Printer, Journal Printer, or PMS Link to service before moving on to another activity.
30 31 32 33 40 41 70 75	ABORT	Internal system error 1. Retry the command at 1-minute intervals a maximum of 5 times.

Continued on next page

Table 3-95. TEST #109 Data Channel Remote Maintenance Loop Around Test — *Continued*

Error Code	Test Result	Description/Recommendation
1000	ABORT	For this test, an Error Code of 1000 can have one of several different meanings: a. The target DATA-CHL is busy and, therefore, not available for use. b. No other DATA-CHLs are administered and, therefore, not available to place the call to the target DATA-CHL. c. All other DATA-CHLs are busy and, therefore, not available to place the call to the target DATA-CHL. d. System resources required to run this test are not available. e. Internal system error Note the results of Tests #110 and #111 in the Short Test Sequence for the target DATA-CHL. If the results of Tests #110 and #111 are both PASS, then there is a high probability that the target DATA-CHL is not defective. Proceed with the remaining steps **only if it is necessary to completely test the target DATA-CHL:** 1. Determine if the target DATA-CHL is in use for some other function (that is, CDR Link, System Printer Link, Journal Printer Link, PMS Link, or secondary administration terminal connection) as described previously in the "Status of network Control Data Channels" section. If so, check for errors on the function that is using the DATA-CHL. If there are no errors, there is a high probability that the DATA-CHL is not defective. Proceed with the remaining steps **only if it is necessary to completely test the target DATA-CHL.** 2. If the target DATA-CHL is in use for some other function, busyout the function (CDR Link, System Printer Link, Journal Printer Link, PMS Link) or the DATA-CHL (secondary administration terminal connection **only)**. *(Continued)*

Continued on next page

Table 3-95. TEST #109 Data Channel Remote Maintenance Loop Around Test — *Continued*

Error Code	Test Result	Description/Recommendation
1000	ABORT *(cont'd.)*	3. Issue the **list data-module** command to determine if other DATA-CHLs are administered. If no other DATA-CHLs are administered, administer at least one at this time. 4. Determine if the DATA-CHLs OTHER THAN the target DATA-CHL are **all** in use for some other function (that is, CDR Link, System Printer Link, Journal Printer Link, PMS Link, or secondary administration terminal connection) as described previously in the "Status of Data Channels" section. If so, **and if it is necessary to completely test the target DATA-CHL,** use the following preference guidelines to free **one** of the DATA-CHLs for testing. a. If a DATA-CHL is being used for a secondary administration terminal connection, busyout that DATA-CHL. b. Otherwise, if a DATA-CHL is being used for a PMS Link, busyout the PMS Link. c. Otherwise, if a DATA-CHL is being used for a Journal Printer Link, busyout the Journal Printer Link. d. Otherwise, if a DATA-CHL is being used for an CDR Link, busyout the CDR Link. e. Otherwise, if a DATA-CHL is being used for a System Printer Link, busyout the System Printer Link. 5. Retry the command at 1-minute intervals a maximum of 5 times. 6. Restore any busied out CDR, System Printer, Journal Printer, or PMS Link to service before moving on to another activity.
1006	ABORT	For this test, an Error Code of 1006 can have one of several different meanings: a. No other DATA-CHLs are administered and, therefore, not available to place the call to the target DATA-CHL. b. All other DATA-CHLs are busy and, therefore, not available to place the call to the target DATA-CHL. c. System resources required to run this test are not available. d. Internal system error Note the results of Tests #110 and #111 in the Short Test Sequence for the target DATA-CHL. If the results of Tests #110 and #111 are both PASS, then there is a high probability that the target DATA-CHL is not defective. Proceed with the remaining steps **only if it is necessary to completely test the target DATA-CHL:**

Continued on next page

Table 3-95. TEST #109 Data Channel Remote Maintenance Loop Around Test — *Continued*

Error Code	Test Result	Description/Recommendation
1006	ABORT *(cont'd.)*	1. Issue the **list data-module** command to determine if other DATA-CHLs are administered. If no other CATA-CHLs are administered, administer at least one at this time. 2. Determine if the target DATA-CHL is in use for some other function (that is, CDR Link, System Printer Link, Journal Printer Link, PMS Link, or secondary administration terminal connection) as described previously in the "Status of Network Control Data Channels" section. If so, check for errors on the function that is using the DATA-CHL. If there are no errors, there is a high probability that the DATA-CHL is not defective. Proceed with the remaining steps **only if it is necessary to completely test the target DATA-CHL.** a. If a DATA-CHL is being used for a secondary administration terminal connection, busyout that DATA-CHL. b. Otherwise, if a DATA-CHL is being used for a PMS Link, busyout the PMS Link. c. Otherwise, if a DATA-CHL is being used for a Journal Printer Link, busyout the Journal Printer Link. d. Otherwise, if a DATA-CHL is being used for an CDR Link, busyout the CDR Link. e. Otherwise, if a DATA-CHL is being used for a System Printer Link, busyout the System Printer Link. 3. Retry the command at 1-minute intervals a maximum of 5 times. 4. Restore any busied out CDR, System Printer, Journal Printer, or PMS Link to service before moving on to another activity.
1016	ABORT	Resources for this test are not available. 1. Retry the command at 1-minute intervals a maximum of 5 times.
1018	ABORT	Test disabled via software patch.
2003	ABORT	Internal system error
2004	ABORT	Internal system error 1. Check the dial plan to make sure that the extensions of the data channel are set up as local extensions rather than remote or UDP extensions. 2. Retry the command at 1-minute intervals a maximum of 5 times.

Continued on next page

Table 3-95. TEST #109 Data Channel Remote Maintenance Loop Around Test — *Continued*

Error Code	Test Result	Description/Recommendation
40 41 2000 2003 2004	FAIL	In the case of Error Codes 40 and 41, the Remote Maintenance Loop Around Test failed because the data received over the connection did not match the data sent over the connection (data was corrupted). In the case of Error Codes 2000, 2003, and 2004, the Remote Maintenance Loop Around Test failed because the data looped over the connection was not received (data was lost). However, because it involves two DATA-CHLs, the test's failure is not sufficient to indict either one of the two DATA-CHLs as defective. 1. Check the dial plan to make sure that the extensions of the data channel are set up as local extensions rather than remote or UDP extensions. 2. Determine which of the DATA-CHLs is in use for some other function (that is, CDR Link, System Printer Link, Journal Printer Link, PMS Link, or secondary administration terminal connection) as described in the "Status of Data Channels" section. 3. Note the test results for Tests #110 and #111 in the Short Test Sequence for the target DATA-CHL and refer to Steps 4, 5, and/or 6 to determine the appropriate actions to take based on those results. 4. If the result of Test #110 is PASS and the result of Test #111 is PASS for the target DATA-CHL, then the most likely problem is that the arbitrarily chosen DATA-CHL is defective. ■ Run the Short Test Sequence for each DATA-CHL that is **not** in use for some other function. Note the test results for Tests #110 and #111 for each of them. ■ If the results of Tests #110 and #111 are both FAIL for at least one of the other DATA-CHLs, investigate the possibility of a defective arbitrarily chosen DATA-CHL. a. Issue the **remove data-module <ext>** for each DATA-CHL for which the results of Tests #110 and #111 were both FAIL to remove the DATA-CHL from operation. b. Repeat the test. c. Replace the Processor circuit pack at your earliest convenience. Replace the circuit pack as described in Chapter 5, "Routine Maintenance Procedures". After the Processor circuit pack has been replaced, its Time-of-Day clock must be set using the **set time** command. 5. If the results of Tests #110 and #111 are not **both** FAIL for any one of the other DATA-CHLs that are not in use for some other function, investigate the possibility of a defective TDM Bus as described in Step 5.

Continued on next page

Table 3-95. TEST #109 Data Channel Remote Maintenance Loop Around Test — *Continued*

Error Code	Test Result	Description/Recommendation
40 41 2000 2003 2004	FAIL *(cont'd.)*	6. If the result of Test #110 is FAIL and the result of Test #111 is PASS for the target DATA-CHL, then the most likely problem is that the TDM Bus or Tone-Clock circuit pack is defective. ■ Check for the existence of TDM Bus (TDM-BUS) and/or Tone-Clock circuit pack (TONE-BD, TONE-PT, and TDM-CLK) errors and alarms. If they exist: a. Refer to the corresponding Maintenance documentation to clear the errors and alarms. b. Repeat the test. ■ If TDM Bus (TDM-BUS) and/or Tone-Clock circuit pack (TONE-BD, TONE-PT, and TDM-CLK) errors and alarms do not exist, investigate the possibility that the target DATA-CHL, or the Processor circuit pack is defective as described in Step 6. 7. If the result of Test #110 is either PASS or FAIL and the result of test #111 is FAIL for the target DATA-CHL, then the most likely problem is that the target DATA-CHL is defective, or the Processor circuit pack is defective. ■ Busyout **all** functions that are using the Data Channels (DATA-CHLs). **CAUTION:** *All functions must be busied out because Test #107 is destructive and terminates all established connections over the DATA-CHLs.* ■ Issue the **test data-module <ext> long** for the target DATA-CHL. Note the test results for Test #107 and #108. a. If the result of Test #107 is FAIL, then the Processor circuit pack is defective. ■ Replace the Processor circuit pack at your earliest convenience. After the Processor circuit pack has been replaced, its Time-of-Day clock must be set using the **set time** command. ■ Repeat the test. b. If the result of Test #107 is PASS and the result of Test #108 is FAIL, then the Processor circuit pack is defective. ■ Although all DATA-CHLs are unusable, the SW-CTL is still operational. Based on the customer's use of DATA-CHLs, replace the Processor circuit pack at the customer's convenience. After the Processor circuit pack has been replaced, its Time-of-Day clock must be set using the **set time** command. ■ Repeat the test.

Continued on next page

Table 3-95. TEST #109 Data Channel Remote Maintenance Loop Around Test — *Continued*

Error Code	Test Result	Description/Recommendation
40 41 2000 2003 2004	FAIL *(cont'd.)*	If the result of Test #107 is PASS and the result of Test #108 is PASS, then the target DATA-CHL is defective. ■ Issue the **remove data-module <ext>** for the target DATA-CHL to remove it from operation. ■ Replace the Processor circuit pack at your earliest convenience. After the Processor circuit pack has been replaced, its Time-of-Day clock must be set using the **set time** command. 8. Restore any busied out CDR, Journal Printer, System Printer, or PMS Link to service before moving on to another activity.
	PASS	The target DATA-CHL, Processor circuit pack, TDM Bus (TDM-BUS), and Tone-Clock circuit pack (TONE-BD, TONE-PT, TDM-CLK) are functioning. Connections can be established over the DATA-CHLs.

Data Channel Crosstalk Test (#110)

This test verifies the integrity of the entire DATA-CHL, that is, the software, dual port RAM, and hardware that composes it. However, unlike the Remote Maintenance Loop Around Test (#109), this test only involves the single DATA-CHL that is the target of the test. A loop around connection is established over the TDM Bus from the DATA-CHL back to itself. Data is looped over the connection in each direction, that is, the DATA-CHL is tested as both a sender of data and a receiver of data. The test checks that the data received by the DATA-CHL is the same as the data that was sent by the DATA-CHL.

Because it establishes a loop around connection from the Network Control DATA-CHL back to itself across the TDM Bus, this test does more than just verify the integrity of the target DATA-CHL. It also verifies the integrity of the TDM Bus and Tone-Clock circuit pack (by sending and receiving data).

If this test aborts or fails, it is impossible to determine from this test alone whether the target DATA-CHL is defective or if the problem lies with the TDM Bus, or Tone-Clock circuit pack. The results of running Tests #107, #108, and #111 on the DATA-CHL can be used to determine whether the target DATA-CHL is defective.

NOTE:
If an Error Code is encountered that recommends that an CDR Link, System Printer Link, PMS Log Printer, Wakeup-Log Printer Link, and/or PMS Link be busied out, restore each busied-out link to service according to the

PRI-CDR/SEC-CDR (PRI-CDR Link), SYS-PRNT, or PMS-LINK Maintenance documentation, respectively, before concluding work on the problem.

Table 3-96. TEST #110 Data Channel Crosstalk Test

Error Code	Test Result	Description/Recommendation
4	ABORT	For this test, an Error Code of 4 can have one of two different meanings: a. The target DATA-CHL is busy and, therefore, not available for use. b. Internal system error Determine if the target DATA-CHL is in use for some other function (that is, CDR Link, System Printer Link, Journal Printer Link, PMS Link, or secondary administration terminal connection) as described previously in the "Status of Data Channels" section. If so, check for errors on the function that is using the DATA-CHL. If there are no errors, there is a high probability that the DATA-CHL is not defective. Proceed with the remaining steps **only if it is necessary to completely test the target DATA-CHL:** 1. If the target DATA-CHL is in use for some other function, busyout the function (CDR Link, System Printer Link, Journal Printer Link, PMS Link) or the DATA-CHL (secondary administration terminal connection **only).** 2. Retry the command at 1-minute intervals a maximum of 5 times. 3. Restore any busied out CDR, System Printer, Journal Printer, or PMS Link to service before moving on to another activity.
40 70 75	ABORT	Internal system error 1. Retry the command at 1-minute intervals a maximum of 5 times.

Continued on next page

Table 3-96. TEST #110 Data Channel Crosstalk Test — *Continued*

Error Code	Test Result	Description/Recommendation
1000	ABORT	For this test, an Error Code of 1000 can have one of several different meanings: a. The target DATA-CHL is busy and, therefore, not available for use. b. System resources required to run this test are not available. c. Internal system error Determine if the target DATA-CHL is in use for some other function (that is, CDR Link, System Printer Link, Journal Printer Link, PMS Link, or secondary administration terminal connection) as described previously in the "Status of Data Channels" section. If so, check for errors on the function that is using the DATA-CHL. If there are no errors, there is a high probability that the DATA-CHL is not defective. Proceed with the remaining steps **only if it is necessary to completely test the target DATA-CHL:** 1. If the target DATA-CHL is in use for some other function, busyout the function (PRI-CDR/SEC-CDR, SYS-PRNT, PMS-PRNT/JNL-PRNT, PMS-LINK) or the DATA-CHL (secondary administration terminal connection **only**). 2. Retry the command at 1-minute intervals a maximum of 5 times. 3. Restore any busied out PRI-CDR/SEC-CDR, SYS-PRNT, PMS-PRNT/JNL-PRNT, PMS-LINK MOs to service before moving on to another activity.
1002	ABORT	For this test, an Error Code of 1002 can have one of two different meanings: 1. System resources required to run this test are not available. 2. Internal system error
1006	ABORT	System resources required to run this test are not available.
1016	ABORT	Resources for the test are not available. 1. Retry the command at 1-minute intervals a maximum of 5 times.
1018	ABORT	Test disabled via software patch.
2000	ABORT	Resources for the test are not available.
2003	ABORT	Internal system error 1. Retry the command at 1-minute intervals a maximum of 5 times.

Continued on next page

Table 3-96. TEST #110 Data Channel Crosstalk Test — *Continued*

Error Code	Test Result	Description/Recommendation
14 16 40 2000 2003 2004	FAIL	In the case of Error Code 40, the Crosstalk Test failed because the data received over the connection did not match the data sent over the connection (data was corrupted). In the case of Error Code 2000, 2003, and 2004, the crosstalk test failed because the data looped over the connection was not received (data was lost). 1. Determine which of the DATA-CHLs are in use for some other function (that is, CDR Link, System Printer Link, Journal Printer Link, PMS Link, or secondary administration terminal connection) as described previously in the "Status of Data Channels" section. 2. Note the test result for Test #111 in the Short Test Sequence for the target DATA-CHL and refer to Steps 3 and/or 4 to determine the appropriate actions to take based on those results. 3. If the result of Test #111 is PASS, then the most likely problem is that the TDM Bus or Tone-Clock circuit pack is defective. a. Check for the existence of TDM Bus (TDM-BUS) and/or Tone-Clock circuit pack (TONE-BD, TONE-PT, and TDM-CLK) errors and alarms. If they exist: 1. Refer to the corresponding Maintenance documentation to clear the errors and alarms. 2. Repeat the test. b. If TDM Bus (TDM-BUS) and/or Tone-Clock circuit pack (TONE-BD, TONE-PT, and TDM-CLK) errors and alarms do not exist, investigate the possibility that the target DATA-CHL, or the Processor circuit pack is defective as described in Step 4.

Continued on next page

Table 3-96. TEST #110 Data Channel Crosstalk Test — *Continued*

Error Code	Test Result	Description/Recommendation
14 16 40 2000 2003 2004	FAIL *(cont'd.)*	4. If the result of Test #111 is FAIL, then the most likely problem is that the target DATA-CHL is defective, or the Processor circuit pack is defective. Busyout **all** functions that are using the Data Channels (DATA-CHLs). **CAUTION:** *All functions must be busied out because Test #107 is destructive and terminates all established connections over the DATA-CHLs.* a. Issue the **test data-module <ext> long** command for the target DATA-CHL. Note the test results for Tests #107 and #108. 1. If the result of Test #107 is FAIL, then the Processor circuit pack is defective. (a). Replace the Processor circuit pack at your earliest convenience. After the Processor circuit pack has been replaced, its Time-of-Day clock must be set using the **set time** command. (b). Repeat the test. 2. If the result of Test #107 is PASS and the result of Test #108 is FAIL: (a). Although all DATA-CHLs are unusable, the SW-CTL is still operational. Based on the customer's use of DATA-CHLs, replace the Processor circuit pack at the customer's convenience. After the Processor circuit pack has been replaced, its Time-of-Day clock must be set using the **set time** command. (b). Repeat the test. 3. If the result of Test #107 is PASS and the result of Test #108 is PASS, then the target DATA-CHL is defective. (a). Issue the **remove data-module <ext>** command for the target DATA-CHL to remove it from operation. (b). Replace the Processor circuit pack at your earliest convenience. After the Processor circuit pack has been replaced, its Time-of-Day clock must be set using the **set time** command. 4. Restore any busied out function (PRI-CDR/SEC-CDR, SYS-PRNT, PMS-PRNT/JNL-PRNT, PMS-LINK) to service before moving on to another activity. *(Continued)*

Continued on next page

Table 3-96. TEST #110 Data Channel Crosstalk Test — *Continued*

Error Code	Test Result	Description/Recommendation
	PASS	The target DATA-CHL, Processor circuit pack, TDM Bus (TDM-BUS), and Tone-Clock circuit pack (TONE-BD, TONE-PT, TDM-CLK) are functioning. Connections can be established over the target DATA-CHL.

Data Channel Local Loop Back Test (#111)

This test verifies the integrity of the dual port RAM that is shared between the software and hardware that composes the DATA-CHL. The dual port RAM is placed in local loop back mode such that data to be sent by the DATA-CHL is instead looped back to be received by the DATA-CHL. The loop back is done within the dual port RAM, that is, the data is never sent over the TDM Bus. The test checks that the data received by the DATA-CHL is the same as the data that was sent by the DATA-CHL.

NOTE:
If an Error Code is encountered that recommends that an CDR Link, System Printer Link, PMS Log Printer, Wakeup-Log Printer, and/or PMS Link be busied out, restore each busied-out link to service according to the PRI-CDR/SEC-CDR (PRI-CDR Link), SYS-PRNT (System Printer Link), PMS-PRNT/JNL-PRNT (PMS Printer Link), or PMS-LINK (Property Management System Link) Maintenance documentation, respectively, before concluding work on the problem.

Table 3-97. TEST #111 Data Channel Local Loop Back Test

Error Code	Test Result	Description/Recommendation
4	ABORT	For this test, an Error Code of 4 can have one of two different meanings: b. The target DATA-CHL is busy and, therefore, not available for use. c. Internal system error Determine if the target DATA-CHL is in use for some other function (that is, CDR Link, System Printer Link, Journal Printer Link, PMS Link, or secondary administration terminal connection) as described previously in the "Status of Data Channels" section. If so, check for errors on the function that is using the DATA-CHL. If there are no errors, there is a high probability that the DATA-CHL is not defective. Proceed with the remaining steps **only if it is necessary to completely test the target DATA-CHL.** 1. If the target DATA-CHL is in use for some other function, busyout the function (PRI-CDR/SEC-CDR, SYS-PRNT, PMS-PRNT/JNL-PRNT, PMS-LINK) or the DATA-CHL (secondary administration terminal connection **only**). 2. Retry the command at 1-minute intervals a maximum of 5 times. 3. Restore any busied out PRI-CDR/SEC-CDR, SYS-PRNT, PMS-PRNT/JNL-PRNT, PMS-LINK MOs to service before moving on to another activity.
40 70 75	ABORT	Internal system error 1. Retry the command at 1-minute intervals a maximum of 5 times.

Continued on next page

Table 3-97. TEST #111 Data Channel Local Loop Back Test — *Continued*

Error Code	Test Result	Description/Recommendation
1000	ABORT	For this test, an Error Code of 1000 can have one of several different meanings: a. The target DATA-CHL is busy and, therefore, not available for use. b. System resources required to run this test are not available. c. Internal system error Determine if the target DATA-CHL is in use for some other function (that is, CDR Link, System Printer Link, Journal Printer Link, PMS Link, or secondary administration terminal connection) as described previously in the "Status of Data Channels" section. If so, check for errors on the function that is using the DATA-CHL. If there are no errors, there is a high probability that the DATA-CHL is not defective. Proceed with the remaining steps **only if it is necessary to completely test the target DATA-CHL:** 1. If the target DATA-CHL is in use for some other function, busyout the function (PRI-CDR/SEC-CDR, SYS-PRNT, PMS-PRNT/JNL-PRNT, PMS-LINK) or the DATA-CHL (secondary administration terminal connection **only**). 2. Retry the command at 1-minute intervals a maximum of 5 times. 3. Restore any busied out PRI-CDR/SEC-CDR, SYS-PRNT, PMS-PRNT/JNL-PRNT, PMS-LINK MOs to service before moving on to another activity.
1006	ABORT	For this test, an Error Code of 1006 can have one of several different meanings: a. System resources required to run this test are not available. b. Internal system error. Retry the command at 1-minute intervals a maximum of 5 times.
1016	ABORT	Resources for the test are not available. 1. Retry the command at 1-minute intervals a maximum of 5 times.
1018	ABORT	Test disabled via software patch.
2000	ABORT	Internal system error
2003	ABORT	Internal system error 1. Retry the command at 1-minute intervals a maximum of 5 times.

Continued on next page

Table 3-97. TEST #111 Data Channel Local Loop Back Test — *Continued*

Error Code	Test Result	Description/Recommendation
40 2000 2003 2004	FAIL	In the case of Error Code 40, the Local Loop Back Test failed because the data received over the connection did not match the data sent over the connection (data was corrupted). In the case of Error Code 2000, 2003, and 2004, the Local Loop Back Test failed because the data looped over the connection was not received (data was lost). 1. Determine which of the DATA-CHLs are in use for some other function (that is, PRI-CDR/SEC-CDR, SYS-PRNT, PMS-PRNT/JNL-PRNT, PMS-LINK or secondary administration terminal connection) as described previously in the "Status of Data Channels" section. 2. The most likely problem is that the target DATA-CHL is defective. Busyout ***all*** functions that are using the Data Channels (DATA-CHLs). **CAUTION:** *All functions must be busied out because Test #107 is destructive and terminates all established connections over the DATA-CHLs.* 3. Issue the **test data-module <ext> long** command for the target DATA-CHL. Note the test results for Tests #107 and #108. a. If the result of Test #107 is FAIL, then the Processor circuit pack is defective. 1. Replace the Processor circuit pack at your earliest convenience. After the Processor circuit pack has been replaced, its Time-of-Day clock must be set using the **set time** command. 2. Repeat the test. b. If the result of Test #107 is PASS and the result of Test #108 is FAIL: 1. Although all DATA-CHLs are unusable, the SW-CTL is still operational. Based on the customer's use of DATA-CHLs, replace the Processor circuit pack at the customer's convenience. After the Processor circuit pack has been replaced, its Time-of-Day clock must be set using the **set time** command. 2. Repeat the test.

Continued on next page

Table 3-97. TEST #111 Data Channel Local Loop Back Test — *Continued*

Error Code	Test Result	Description/Recommendation
	FAIL	c. If the result of Test #107 is PASS and the result of Test #108 is PASS, then the target DATA-CHL is defective. 1. Issue the **remove data-module** command. ■ Replace the Processor circuit pack at your earliest convenience. After the Processor circuit pack has been replaced, its Time-of-Day clock must be set using the **set time** command. 2. Restore any busied out function (PRI-CDR/SEC-CDR, SYS-PRNT, PMS-PRNT/JNL-PRNT, PMS-LINK) to service before moving on to another activity.
	PASS	The target DATA-CHL is functioning. Connections can be established over the target DATA-CHL.

DATA-CON (Network Control Driver)

MO Name (in Alarm Log)	Alarm Level	Initial Command to Run	Full Name of MO
DATA-CON	MINOR	none	Network Control Driver

The TN798 Processor circuit pack contains the following objects: the SW-CTL (Switch Control), four DATA-CHLs (Data Channels), the DATA-CON (Network Control Driver), and the generic hardware that interfaces with the TDM Bus (DATA-BD). The DATA-CON (Network Control Driver) is the subject of this section. The DATA-CHLs (Network Control Channels) are also described.

Together the 4 DATA-CHLs and the DATA-CON provide a data communications interface that allows DTE equipment connected to port circuit packs to communicate with software applications running on the system. The DATA-CON represents the interface to the control channel of the TDM Bus. Each DATA-CHL represents a dial-up/dial-out asynchronous communication port that interfaces to the TDM Bus. The DATA-CON supports the signaling required to establish and tear down a connection between the terminal equipment and a software application. Data is transported between the terminal equipment and the software over the connection established over the DATA-CHL.

From an external (user) point of view, the DATA-CON is not directly accessible via a system technician command; that is, there is no object command word that represents it. Instead, the DATA-CON is tested under the guise of the DATA-CHLs that it controls. The **test data-module <ext> [short | long]** command tests the DATA-CON along with the DATA-CHL designated by <ext> but all Test Results are associated with the DATA-CHL Maintenance Name.

From an internal (system software) point of view, the DATA-CON uses the same set of tests as the DATA-CHLs. Therefore, the DATA-CON assumes the same Error Type and Aux Data values as the DATA-CHLs in the Hardware Error Log. It is also alarmed at the same Alarm Level (that is, MINOR, ON BOARD) in the Alarm Log. In both logs, the Maintenance Name is DATA-CON.

Error Log Entries and Test to Clear Values

Table 3-98. Network Control Driver Error Log Entries

Error Type	Aux Data	Associated Test	Alarm Level	On/Off Board	Test to Clear Value (a)
0[1]	0	Any	Any	Any	none
1		Local Loop Back Test (#111)	MINOR	ON	none
257	Any	Remote Maintenance Loop Around Test (#109)	MINOR	ON	none
513		Crosstalk Test (#110)	MINOR	ON	none
769	Any	Dual Port RAM Test (#108)	MINOR	ON	none

1. Run the Short Test Sequence first. If all tests pass, run the Long Test Sequence. Refer to the appropriate test description and follow the recommended procedures.

Note:

a. As previously described, the DATA-CON is not directly accessible via a system technician command so there is no Test to Clear value that can be used to directly clear errors and alarms raised against the DATA-CON. However, since the DATA-CON and the DATA-CHLs share the same set of tests (that is, test the same set of hardware, firmware, and software), DATA-CON errors and alarms are accompanied by DATA-CHL errors and alarms.

Therefore, the strategy to clear DATA-CON errors and alarms is to first clear all DATA-CHL errors and alarms. After DATA-CHL errors and alarms have been cleared, allow about 60 minutes for maintenance software to run internally and to automatically clear the DATA-CON errors and alarms.

System Technician-Demanded Tests: Descriptions and Error Codes

Because the DATA-CON uses the same set of tests as the DATA-CHLs, refer to the "System Technician-Demanded Tests: Descriptions and Error Codes" in the DATA-CHL (Network Control Data Channel) Maintenance documentation for a description of the tests and their associated error codes.

DAT-LINE (Data Line)

MO Name (in Alarm Log)	Alarm Level	Initial Command to Run[1]	Full Name of MO
DAT-LINE	MINOR	test port PCSSpp l	Data Line
DAT-LINE	WARNING	test port PCSSpp sh	Data Line

1. Where P is the port network number (1 for PPN); C is the carrier designation (for example, A, B, or C); and SS is the address of the slot in the carrier where the circuit pack is located (for example, 01, 02, ..., etc.).

The TN726 Data Line circuit pack is a port circuit that provides connectivity from the system to asynchronous CPE having RS232-compatible serial interfaces. There are eight data lines (DAT-LINEs) on the Data Line circuit pack. If there are errors associated with the DT-LN-BD (Data Line Circuit Pack), refer to the XXX-BD (Common Port Circuit Pack) Maintenance documentation.

Data Lines are administered via the administration terminal **add data-module** command. The data module type is *data-line*. The **list data-module** command lists all administered data modules in the system.

The TN750 Announcement circuit pack has one Data Line on it. The Data Line is used for saving and restoring announcements. For a description of this feature, refer to ANN-BD (Announcement Circuit Pack) Maintenance documentation. Also, if there are errors associated with the Announcement circuit pack, refer to the ANN-BD Maintenance documentation.

NOTE:
If the tests for the Data Line in question pass and there are still user-reported problems, there is probably an external problem. Test the ADU, following the procedures outlined in *User Manual Z3A Asynchronous Data Unit*, 555-401-701. If the ADU appears to be working properly, check the external wiring and, finally, check the customer equipment.

Error Log Entries and Test to Clear Value

Table 3-99. Data Line Error Log Entries

Error Type	Aux Data	Associated Test	Alarm Level	On/Off Board	Test to Clear Value
0[1]	0	Any	Any	Any	test port PCSSpp sh r 1
1		Digital Loop Around Test (#171)	MINOR	ON	test port PCSSpp sh r 2
15(a)	Any	Audit Update Test (#36)			
18	0	busyout port PCSSpp	WARNING	OFF	release port PCSSpp
130 (b)		None	WARNING	ON	test port PCSSpp sh
257		Conference Circuit Test (#7)	MINOR	ON	test port PCSSpp l r 2
513		NPE Crosstalk Test (#6)	MINOR	ON	test port PCSSpp l r 2
769(a)	Any (c)	None			

1. Run the Short Test Sequence first. If all tests pass, run the Long Test Sequence. Refer to the appropriate test description and follow the recommended procedures.

Notes:

a. This is a software audit error that does not indicate any hardware malfunction. Run the Short Test Sequence and investigate errors (if any).

b. This error type indicates that the circuit pack has been removed or has been insane for more than 11 minutes. To clear the error, reinsert or replace the circuit pack.

c. This error is logged when the Data Line circuit pack finds an error with the transmit/receive circuitry of an administered Data Line on circuit pack insertion. Perform the following procedure:

   1. Issue the **busyout board PCSS** command to busyout the Data Line circuit pack on which this port resides.

   2. Issue the **reset board PCSS** command. Check the Hardware Error Log to determine if Error Type 769 is logged again for the DAT-LINE MO.

NOTE:
When displaying errors, set the `Active Alarms Only` field to **n**.

If Error Type 769 reappears, replace the DAT-LINE circuit pack. If Error Type 769 does not reappear, proceed to Step 3.

3. Issue the **release board PCSS** command to release the Data Line circuit pack on which this port resides.

System Technician-Demanded Tests: Descriptions and Error Codes

Always investigate tests in the order presented in the table below when inspecting errors in the system. By clearing error codes associated with the *Digital Loop Around Test,* for example, you may also clear errors generated from other tests in the testing sequence.

Order of Investigation	Short Test Sequence	Long Test Sequence	D/ND[1]
Digital Loop Around Test (#171)	X	X	ND
NPE Crosstalk Test (#6)		X	ND
Conference Circuit Test (#7)		X	ND
Audit Update Test (#36)	X	X	ND

1. D = Destructive; ND = Nondestructive

NPE Crosstalk Test (#6)

The NPE Crosstalk Test verifies that this port's NPE channel talks on the selected time slot and never crosses over to time slots reserved for other connections. If the NPE is not working correctly, one-way and noisy connections may be observed. This test is usually part of a port's Long Test Sequence and takes about 20 to 30 seconds to complete.

Table 3-100. TEST #6 NPE Crosstalk Test

Error Code	Test Result	Description/Recommendation
	ABORT	Could not allocate the necessary system resources to run this test. 1. Retry the command at 1-minute intervals a maximum of 5 times.

Continued on next page

Table 3-100. TEST #6 NPE Crosstalk Test — *Continued*

Error Code	Test Result	Description/Recommendation
1000	ABORT	System resources required to run this test are not available. The port may be in use on a valid call. Use **status data-module** to determine when the port is available for testing. 1. Retry the command at 1-minute intervals a maximum of 5 times.
1001	ABORT	Could not allocate the necessary system resources to run this test. 1. Retry the command at 1-minute intervals a maximum of 5 times.
1002	ABORT	The system could not allocate time slots for the test. The system may be under heavy traffic conditions or it may have time slots out-of-service due to TDM-BUS errors. Refer to “TDM-BUS” to diagnose TDM-BUS errors. 1. If system has no TDM-BUS errors and is not handling heavy traffic, repeat test at 1-minute intervals a maximum of 5 times.
1003	ABORT	The system could not allocate a tone receiver for the test. The system may be oversized for the number of Tone Detectors present or some Tone Detectors may be out-of-service. 1. Resolve any TTR-LEV errors. 2. Resolve any TONE-PT errors. 3. If neither condition exists, retry the test at 1-minute intervals a maximum of 5 times.
1004	ABORT	The port has been seized by a user for a valid call. Use **status data-module** to determine when the port is available for testing. 1. Retry the command at 1-minute intervals a maximum of 5 times.
1020	ABORT	The test did not run due to an already existing error on this port (Error Type 769). 1. Refer to the procedure for Error Type 769. If Error Type 769 still occurs on this port, replace the circuit pack.
2000	ABORT	Response to the test request was not received within the allowable time period.
2100	ABORT	Could not allocate the necessary system resources to run this test. 1. Retry the command at 1-minute intervals a maximum of 5 times.
Any	FAIL	The NPE of the tested port was found to be transmitting in error. This causes noisy and unreliable connections. 1. Replace the circuit pack.
	PASS	The port is correctly using its allocated time slots. User-reported troubles on this port should be investigated using other port tests, examining the ADU, external wiring, and customer equipment.

Conference Circuit Test (#7)

The Conference Circuit Test verifies that the NPE channel for the port being tested can correctly perform the conferencing function. The NPE is instructed to listen to several different tones and conference the tones together. The resulting signal is then measured by a Tone Detector port. If the level of the tone is within a certain range, the test passes.

Table 3-101. TEST #7 Conference Circuit Test

Error Code	Test Result	Description/Recommendation
	ABORT	Could not allocate the necessary system resources to run this test. 1. Retry the command at 1-minute intervals a maximum of 5 times.
1000	ABORT	System resources required to run this test are not available. The port may be in use on a valid call. Use **status data-module** to determine when the port is available for testing.
1004	ABORT	The port has been seized by a user for a valid call. Use **status data-module** to determine when the port is available for testing. 1. Retry the command at 1-minute intervals a maximum of 5 times.
1020	ABORT	The test did not run due to an already existing error on this port (Error Type 769). 1. Refer to the procedure for Error Type 769. If Error Type 769 still occurs on this port, replace the circuit pack.
2000	ABORT	Response to the test request was not received within the allowable time period.
2100	ABORT	Could not allocate the necessary system resources to run this test. 1. Retry the command at 1-minute intervals a maximum of 5 times.
Any	FAIL	The conference circuit test failed (possible off-board problem). 1. Busyout and release the port (data line), and then retest. 2. Replace the circuit pack if the test continues to fail.
	PASS	The port can correctly conference multiple connections. User-reported troubles on this port should be investigated using other port tests, examining the ADU, external wiring, and customer equipment.

Audit Update Test (#36)

This audit makes sure that the hardware state of the Data Line is consistent with the system translations. When this audit is run, the port is queried for the switchhook state, and the software state is updated according to the returned value. Also, the data line options are sent down to the port.

Table 3-102. TEST #36 Audit Update Test

Error Code	Test Result	Description/ Recommendation
1006	ABORT	The test did not run due to an already existing error on this port (Error Type 769). 1. Refer to the procedure for Error Type 769. If Error Type 769 still occurs on this port, replace the circuit pack.
2000	ABORT	Response to the test request was not received within the allowable time period.
2100	ABORT	Could not allocate the necessary system resources to run this test. 1. Retry the command at 1-minute intervals a maximum of 5 times.
7	FAIL	Internal system error 1. Retry the command at 1-minute intervals a maximum of 5 times.
	PASS	The hardware port state is consistent with the software state. User-reported troubles on this port should be investigated using other port tests, examining the ADU, external wiring, and customer equipment.

Digital Loop Around Test (#171)

The Digital Loop Around Test checks the Data Line's ability to transmit and receive data on the TDM Bus. Data is sent through Data Channel 3 (data channel port 3) over the TDM Bus, internally looped through the Data Line back onto the TDM Bus, and received again by Data Channel 3.

If data channel 3 is in use or not administered, this test aborts. This test may fail if Network Control Data Channel 3 is not functioning properly. If there are any DATA-CHL errors in the Error Log, refer to the DATA-BD (Data Channel Processor circuit pack) Maintenance documentation to clear them up first. This test passes regardless of any customer equipment that may be connected to the port, as long as the port is not in use by the equipment.

Table 3-103. TEST #171 Digital Loop Around Test

Error Code	Test Result	Description/Recommendation
	ABORT	Internal system error 1. Retry the command at 1-minute intervals a maximum of 5 times.

Continued on next page

Table 3-103. TEST #171 Digital Loop Around Test — *Continued*

Error Code	Test Result	Description/Recommendation
1000	ABORT	System resources required to run this test are not available. The port may be in use on a valid call. Use **status data-module** to determine when the port is available for testing. 1. Retry the command at 1-minute intervals a maximum of 5 times.
1005 1007	ABORT	Data Channel 3 is not administered. This port is required to run this test. 1. Verify that data channel 3 is not administered with the **list data-module** command. Administer data channel 3 with the **add data-module** command, and run this test again.
1016	ABORT	Data Channel 3 is busy. The port may be in use on a valid call. Use **status data-module** to determine when the port is available for testing. 1. Retry the command at 1-minute intervals a maximum of 5 times.
1020	ABORT	The test did not run due to an already existing error on this port (Error Type 769). 1. Reseat the circuit pack and look in the Error Log. If Error Type 769 still occurs on this port, replace the circuit pack.
2003	ABORT	Failed to receive an off-hook from the Data Line. 1. Retry the command at 1-minute intervals a maximum of 5 times.
2004 2005	ABORT ABORT	Failed to receive an off-hook from the Data Channel. The handshake between the data channel and the data line port failed. 1. Look for DATA-CHL errors in the Error Log. If present, refer to DATA-BD (Data Channel Processor circuit pack) Maintenance documentation. 2. Retry the command at 1-minute intervals a maximum of 5 times. 3. If the test still aborts, replace the circuit pack.
2100	ABORT	Could not allocate the necessary system resources to run this test. 1. Retry the command at 1-minute intervals a maximum of 5 times.
	FAIL	The test failed because the data received did not match the data sent. This would indicate that there is a fault somewhere in the transmit/receive path to the TDM Bus, which probably results in data corruption over this port. This test may fail if Data Channel 3 is not functioning properly. 1. Look for DATA-CHL errors in the Error Log. If present, refer to DATA-BD (Data Channel Processor circuit pack) Maintenance documentation. 2. Repeat this test. 3. If the test fails again, replace the Data Line circuit pack.

Continued on next page

Table 3-103. TEST #171 Digital Loop Around Test — *Continued*

Error Code	Test Result	Description/Recommendation
2000	FAIL	The test failed waiting for the transmitted data to be looped back. 1. Look for DATA-CHL errors in the Error Log. If present, refer to DATA-BD (Data Channel Processor circuit pack) Maintenance documentation. 2. Repeat this test. 3. If the test fails again, replace the Data Line circuit pack.
	PASS	The port can correctly transmit/receive data. User-reported troubles on this port should be investigated by examining the ADU, external wiring, and customer equipment.

DETR-BD (International Version)

MO Name (in Alarm Log)	Alarm Level	Initial Command to Run[1]	Full Name of MO
DETR-BD	MINOR	test board PCSS	Tone Detector Circuit Pack
DETR-BD	WARNING	test board PCSS	Tone Detector Circuit Pack

1. Where P is the port network number (1 for PPN); C is the carrier number (for example, A, B, or C); SS is the address of the slot in the carrier where the circuit pack is located (for example, 01, 02, ..., etc.).

The companding mode of the DETR-BD circuit pack must match the administered mode for the system for proper tone detection. The companding mode is administered on the System-Parameters Country-Options form. Refer to *DEFINITY Enterprise Communications Server Release 6 Administration and Feature Description*, 555-230-522.

For all DETR-BD circuit pack level errors, refer to "XXX-BD (Common Port Circuit Pack)" Maintenance documentation.

DID-BD (Direct Inward Dial Trunk Circuit Pack)

MO Name (in Alarm Log)	Alarm Level	Initial Command to Run[1]	Full Name of MO
DID-BD	MIN	test board PCSS sh	Direct Inward Dial Trunk Circuit Pack
DID-BD	WRN	test board PCSS sh	Direct Inward Dial Trunk Circuit Pack

1. Where P is the port network number (1 for PPN); C is the carrier designation (for example, A, B, or C); and SS is the address of the slot in the carrier where the circuit pack is located (for example, 01, 02, ..., etc.).

Refer to XXX-BD (Common Port Circuit Pack) Maintenance documentation for circuit pack level errors. See also DID-TRK (DID Trunk) Maintenance documentation for related trunk information.

DID-DS1 (DS1 DID Trunk)

MO Name (in Alarm Log)	Alarm Level	Initial Command to Run	Full Name of MO
DID-DS1	MAJOR[1]	test trunk <grp>/<mbr> l	Direct Inward Dial Trunk
DID-DS1	MINOR	test trunk <grp>/<mbr> l	Direct Inward Dial Trunk
DID-DS1	WARNING	test trunk <grp>/<mbr>	Direct Inward Dial Trunk

1. A major alarm on a trunk indicates that alarms on these trunks are not downgraded by the **set options** command and that at least 75 percent of the trunks in this trunk group are alarmed.

The DID-DS1 trunk provides a digital DID trunk from a CO switch into the system through a DS1 link. A 24 channel DS1 link can support up to 24 DID-DS1 trunk calls simultaneously. A 32 channel DS1 link can support up to 30 DID-DS1 trunk calls simultaneously. A DID-DS1 trunk can be used for both voice and data communications with appropriate DS1 signaling mode (for example, common channel signaling). Only the TN767 and TN464 DS1 Interface circuit packs support the DID-DS1 trunk call processing signalings, wink-start, and immediate-start.

DID-DS1 trunk maintenance provides a means to maintain a DID trunk on a port of DS1 Interface circuit pack. Information included covers the in-line errors log, initialization tests, periodic tests, system technician demand tests, and alarms escalation and elimination. Two trunk service states are specified in the DID-DS1 trunk maintenance. They are: *out-of-service*, the trunk is in a deactivated state and can't be used for incoming calls; *in-service*, the trunk is in an activated state and can be used for incoming calls. If the DS1 Interface circuit pack is out-of-service, then all trunks on the DS1 Interface circuit pack are put into out-of-service state and a Warning alarm is raised.

Hardware Error Log Entries and Test to Clear Values

Table 3-104. DID-DS1 Error Log Entries

Error Type	Aux Data	Associated Test	Alarm Level	On/Off Board	Test to Clear Value
0[1]	0	Any	Any	Any	test trunk <grp>/<mbr> sh r 1
1 (a)	Any				

Continued on next page

Table 3-104. DID-DS1 Error Log Entries — *Continued*

Error Type	Aux Data	Associated Test	Alarm Level	On/Off Board	Test to Clear Value
15 (b)	Any	Port Audit and Update Test (#36)			
18 (c)			WARNING	OFF	release trunk <grp>/mbr>
130 (d)		None	WARNING	ON	test trunk <grp>/<mbr>
257 (e)	57474 57473				
513 (f)	57392	None	MIN/MAJ[2]	OFF	
769 (g)	57393	None	MIN/MAJ[2]	OFF	
1281		Conference Circuit Test (#7)	MAJ/MIN/ WRN[3]	ON	test trunk <grp>/<mbr> l
1537		NPE Crosstalk Test (#6)	MAJ/MIN/ WRN[3]	ON	test trunk <grp>/<mbr> l
1793 (h)				ON	test board PCSS l
2305(i)	50944	None	MIN/MAJ[2]	OFF	
3840 (j)		Port Audit and Update Test (#36)			

1. Run the Short Test Sequence first. If all tests pass, run the Long Test Sequence. Refer to the appropriate test description and follow the recommended procedures.
2. This alarm will only be raised when the System-Parameter Country form has the Base Tone Generator field set to 4 (Italy). This alarm will be a MINOR alarm unless 75% or more trunks in this trunk group are out of service, then the alarm will be upgraded to a MAJOR alarm.
3. Minor alarms on this MO may be downgraded to Warning alarms based on the values used in the **set options** command. If the Minor alarm is not downgraded by the **set options** values, the Minor alarm is upgraded to a Major alarm if 75 percent of the trunks in this trunk group are alarmed.

Notes:

a. DS1 Interface circuit pack detects a hardware error. The Aux Data field contains the Error Type: 57476, on-hook before wink; 57477, on-hook before ready to receive digits; 57485, wink too short for valid signal.

b. This is a software audit error that does not indicate any hardware malfunction. Run the Short Test Sequence and investigate errors (if any).

c. System Technician has busied out the trunk to out-of-service state. No calls can be made on this trunk.

d. This error type indicates that the circuit pack has been removed or has been insane for more than 11 minutes. To clear the error, reinsert or replace the circuit pack.

e. DS1 Interface circuit pack detects a hardware error. The Aux Data field contains the Error Type: 57474, rotary dial rate above 12 pulses per second; 57473, rotary dial rate below eight pulses per second.

f. DS1 Interface circuit pack detects a hardware error. The Aux Data field contains the Error Type: 57392, no external release on PBX disconnect.

g. DS1 Interface circuit pack detects a hardware error. The Aux Data field contains the Error Type: 57393, belated external release on PBX disconnect.

h. DS1 Interface circuit pack is out-of-service. Look for DS1-BD errors in Hardware Error Log. Refer to the DS1-BD (DS1 Trunk Circuit Pack) Maintenance documentation for details.

i. Error Type 2305—This error indicates that a signaling change was detected by the PBX trunk circuit pack which is inconsistent with the present state of the trunk.

j. Port Audit and Update Test (#36) failed due to an internal system error. Enter **status trunk** command to verify the status of the trunk. If the trunk is out-of-service, then enter the **release trunk** command to put it back to in-service. Retry the test command.

System Technician-Demanded Tests: Descriptions and Error Codes

Always investigate tests in the order they are presented in the table below when inspecting errors in the system. By clearing error codes associated with the *NPE Crosstalk Test,* for example, you may also clear errors generated from other tests in the testing sequence..

Order of Investigation	Short Test Sequence	Long Test Sequence	D/ND[1]
NPE Crosstalk Test (#6)		X	ND
Conference Circuit Test (#7)		X	ND
Port Audit and Update Test (#36)		X	ND

1. D = Destructive; ND = Nondestructive

NPE Crosstalk Test (#6)

One or more NPEs reside on each circuit pack with a TDM Bus interface. The NPE controls port connectivity and gain, and provides conferencing functions on a per-port basis. The NPE Crosstalk Test verifies that this port's NPE channel talks on the selected time slot and never crosses over to time slots reserved for

other connections. If the NPE is not working correctly, one-way and noisy connections may be observed. This test is usually only part of a port's Long Test Sequence and takes about 20 to 30 seconds to complete.

Table 3-105. TEST #6 NPE Crosstalk Test

Error Code	Test Result	Description/ Recommendation
	ABORT	System resources required for this test are not available. 1. Retry the command at 1-minute intervals a maximum of 5 times.
1000	ABORT	System resources required to run this test were not available. The port may be busy with a valid call. Use the **display port PCSSpp** command to determine the trunk group/member number of the port. Use the **status trunk** command to determine the service state of the port. If the service state indicates that the port is in use, then the port is unavailable for certain tests. You must wait until the port is idle before retesting. 1. If the port status is active but the port is not in use (no calls), check the error log for error type 1025 (see the Error Log table for a description of this error and required actions). The port may be locked up. 2. If the port status is idle, retry the command at 1 minute intervals for a maximum of 5 times.
1001	ABORT	System resources required for this test are not available. 1. Retry the command at 1-minute intervals a maximum of 5 times.
1002	ABORT	The system could not allocate time slots for the test. The system may be under heavy traffic conditions or it may have time slots out-of-service due to TDM BUS error. Refer to TDM-BUS (TDM Bus) Maintenance documentation to diagnose any active TDM Bus errors. 1. If system has no TDM-BUS errors and is not handling heavy traffic, repeat test at 1-minute intervals a maximum of 5 times.
1003	ABORT	The system could not allocate a tone receiver for the test. The system may be oversized for the number of Tone Detectors present or some Tone Detectors may be out-of-service. 1. Look for TTR-LEV errors in the Error Log. If present, refer to TTR-LEV (TTR Level) Maintenance documentation. 2. Look for TONE-PT errors in the Error Log. If present, refer to TONE-PT (Tone Generator) Maintenance documentation. 3. If neither condition exists, retry the test at 1-minute intervals a maximum of 5 times.

Continued on next page

Table 3-105. TEST #6 NPE Crosstalk Test — *Continued*

Error Code	Test Result	Description/ Recommendation
1004	ABORT	The port was seized by a user for a valid call. Use the **display port PCSSpp** command to determine the trunk group/member number of the port. Use the **status trunk** command to determine the service state of the port. If the service state indicates that the port is in use, then the port is unavailable for certain tests. You must wait until the port is idle before retesting. 1. If the port status is idle, retry the command at 1 minute intervals for a maximum of 5 times.
1020	ABORT	The test did not run due to a previously existing error on the specific port or a more general circuit pack error. 1. Examine Error Log for existing errors against this port or the circuit pack and attempt to diagnose the previously existing error.
2000	ABORT	Response to the test request was not received within the allowable time period.
2100	ABORT	System resources required for this test are not available. 1. Retry the command at 1-minute intervals a maximum of 5 times.
2053	ABORT	At least one of the following errors is found on the DS1 circuit pack: 1281—Loss of signal, 1793—Blue Alarm, 2049—Red Alarm, 2305—Yellow Alarm, 1537—Hyperactivity. Look for the above error types in the Hardware Error Log and follow the procedures given in the appropriate DS1-BD or UDS1-BD maintenance documentation for the listed error types.
ANY	FAIL	The test failed. This can be due to on-board or off-board problems. Off-board problems of concern include EXP-PN and EXP-INTF faults, TDM-BUS faults, and faults associated with the tone detectors/tone generators. Clear all off-board problems before replacing the board. Keep in mind that a TDM-BUS problem is usually the result of a faulty board connected to the backplane or bent pins on the backplane. 1. Look for EXP-PN and/or EXP-INTF errors in the error log. If present, refer to the EXP-PN and the EXP-INTF Maintenance documentation. 2. Look for TDM-BUS errors in the error log. If present, refer to the TDM-BUS Maintenance documentation. 3. Look for TONE-BD and/or TONE-PT errors in the error log. If present, refer to the TONE-BD and the TONE-PT Maintenance documentation. 4. Retest when the faults from steps 1, 2, and 3 are cleared. Replace the board only if the test fails.
	PASS	The port is correctly using its allocated time slots. User-reported troubles on this port should be investigated using other port tests and by examining station, trunk, or external wiring.

Continued on next page

Table 3-105. TEST #6 NPE Crosstalk Test — *Continued*

Error Code	Test Result	Description/ Recommendation
0	NO BOARD	The test could not relate the internal ID to the port (no board). This could be due to incorrect translations, no board is inserted, an incorrect board is inserted, or an insane board is inserted. 1. Check to ensure that the board translations are correct. Use the **list config** command and resolve any problems that are found. 2. If the board was found to be correctly inserted in step 1, issue the **busyout board** command. 3. Issue the **reset board** command. 4. Issue the **release busy board** command. 5. Issue the **test board long** command. This should re-establish the linkage between the internal ID and the port. If this is not the case, check to see that there is a valid board inserted.

Conference Circuit Test (#7)

One or more NPEs reside on each circuit pack with a TDM Bus interface. The NPE controls port connectivity and gain, and provides conferencing functions on a per-port basis. The Conference Circuit Test verifies that the NPE channel for the port being tested can correctly perform the conferencing function. The NPE is instructed to listen to several different tones and conference the tones together. The resulting signal is then measured by a Tone Detector port. If the level of the tone is within a certain range, the test passed.

Table 3-106. TEST #7 Conference Circuit Test

Error Code	Test Result	Description/ Recommendation
	ABORT	Could not allocate the necessary system resources to run this test. 1. Retry the command at 1-minute intervals a maximum of 5 times.

Continued on next page

Table 3-106. TEST #7 Conference Circuit Test — *Continued*

Error Code	Test Result	Description/ Recommendation
1000	ABORT	System resources required to run this test were not available. The port may be busy with a valid call. Use the **display port PCSSpp** command to determine the trunk group/member number of the port. Use the **status trunk** command to determine the service state of the port. If the service state indicates that the port is in use, then the port is unavailable for certain tests. You must wait until the port is idle before retesting. 1. If the port status is active but the port is not in use (no calls), check the error log for error type 1025 (see the Error Log table for a description of this error and required actions). The port may be locked up. 2. If the port status is idle, retry the command at 1-minute intervals for a maximum of 5 times.
1002	ABORT	The system could not allocate time slots for the test. The system may be under heavy traffic conditions, or it may have time slots out of service due to TDM-BUS errors. Refer to the TDM-BUS (TDM bus) Maintenance documentation to diagnose any active TDM-BUS errors. 1. If the system has no TDM-BUS errors and is not handling heavy traffic and the port status is idle, retry the command at 1-minute intervals for a maximum of 5 times.
1003	ABORT	The system could not allocate a tone receiver for the test. The system may be oversized for the number of tone detectors present or some of the tone detectors may be out of service. Issue the **list measurements tone-receiver** command to display basic information about the system's tone receivers. 1. Look for TTR-LEV errors in the error log. If present, refer to the TTR-LEV Maintenance documentation. 2. Look for TONE-PT errors in the error log. If present, refer to the TONE-PT Maintenance documentation. 3. If neither condition exists, retry the test at 1-minute intervals for a maximum of 5 times.
1004	ABORT	The port was seized by a user for a valid call. Use the **display port PCSSpp** command to determine the trunk group/member number of the port. Issue the **status trunk** command to determine the service state of the port. If the service state indicates that the port is in use, then the port is unavailable for certain tests. You must wait until the port is idle before retesting. 1. If the port status is idle, retry the command at 1-minute intervals for a maximum of 5 times.

Continued on next page

Table 3-106. TEST #7 Conference Circuit Test — *Continued*

Error Code	Test Result	Description/ Recommendation
1018	ABORT	The test was disabled via translation. You may want to determine why the test has been disabled before you enable it. 1. Verify that the 'Maintenance Test' field on the 'Trunk Administration' screen is set to 'n'. To enable the test, change the trunk administration and enter 'y' into the 'Maintenance Test' field. 2. Repeat the test.
1020	ABORT	The test did not run due to a previously existing error on the specific port or a more general circuit pack error. 1. Examine Error Log for existing errors against this port or the circuit pack and attempt to diagnose the previously existing error.
2000	ABORT	Response to the test request was not received within the allowable time period.
2100	ABORT	Could not allocate the necessary system resources to run this test. 1. Retry the command at 1-minute intervals a maximum of 5 times.
2053	ABORT	At least one of the following errors is found on the DS1 circuit pack: 1281—Loss of signal, 1793—Blue Alarm, 2049—Red Alarm, 2305—Yellow Alarm, 1537—Hyperactivity. Look for the above error types in the Hardware Error Log and follow the procedures given in the appropriate DS1-BD or UDS1-BD maintenance documentation for the listed error types.

Continued on next page

Table 3-106. TEST #7 Conference Circuit Test — *Continued*

Error Code	Test Result	Description/ Recommendation
	FAIL	The NPE of the tested port did not conference the tones correctly. This can cause noisy and unreliable connections. 1. Enter the **list configuration board PCSS** command. If the circuit pack is a TN767B vintage 8 or 9, replace the circuit pack with a TN767C V3 or later. The error log may have error type 1281. 2. Test all administered trunks on the board. If one fails, this could be an off-board problem (such as an incoming seizure or an off-hook port seizure during the test). Retest the board. 3. If all of the ports fail, check the CABINET (see note below). 4. If several ports fail, check the error log for TONE-BD or TONE-PT errors. If there are such errors, take the appropriate action. When the TONE errors have cleared, rerun the test. 5. If the retry passes and troubles have been reported, coordinate isolation with the CO. Make sure that the switch, the CO, and any NTCE equipment (the CSUs) have the correct administration. 6. Replace the circuit pack. **NOTE:** If the conference circuit test fails for all ports on a circuit pack, a -5 volt power problem is indicated.
	PASS	The port can correctly conference multiple connections. User-reported troubles on this port should be investigated using other port tests and by examining station, trunk, or external wiring. **NOTE:** This test always passes for TN742 Analog circuit packs prior to Vintage 4.
0	NO BOARD	The test could not relate the internal ID to the port (no board). This could be due to incorrect translations, no board is inserted, an incorrect board is inserted, or an insane board is inserted. 1. Check to ensure that the board translations are correct. Use the **llst config** command and resolve any problems that are found. 2. If the board was found to be correctly inserted in step 1, issue the **busyout board** command. 3. Issue the **reset board** command. 4. Issue the **release busy board** command. 5. Issue the **test board long** command. This should re-establish the linkage between the internal ID and the port. If this is not the case, check to see that there is a valid board inserted.

Port Audit and Update Test (#36)

This test sends port level translation data from the switch processor to the DS1 Interface circuit pack to assure that the trunk's translation is correct. Translation updates include the following data: trunk type (in/out), dial type, timing parameters, and signaling bits enabled. The port audit operation verifies the consistency of the current state of the trunk as kept in the DS1 Interface circuit pack and in the switch software.

Table 3-107. TEST #36 Port Audit and Update Test

Error Code	Test Result	Description/ Recommendation
	ABORT	Internal system error 1. Retry the command at 1-minute intervals a maximum of 5 times.
1000	ABORT	The port may be busy with a valid call. Issue the **display port PCSSpp** command to determine the trunk group/member number of the port. Use the **status trunk** command to determine the service state of the port. If the service state indicates that the port is in use, then the port is unavailable for certain tests. You must wait until the port is idle before retesting. 1. If the port status is active but the port is not in use (no calls), check the error log for error type 1025 (see the Error Log table for a description of this error and required actions). The port may be locked up. 2. If the port status is idle, retry the command at 1-minute intervals a maximum of 5 times.
1006	ABORT	The test was aborted because the trunk is out of service. 1. Use the **status trunk** command to verify that the trunk is out of service. 2. If the trunk is out of service, determine why. 3. If it is OK to put the trunk back in service, issue the **release trunk** command to put the trunk back in service, and then retry the test.
2000	ABORT	Response to the test was not received within the allowable time period.
2100	ABORT	Could not allocate resources to run this test. 1. Retry the command at 1-minute intervals for a maximum of 5 times.
	FAIL	Test failed due to Internal system error 1. Retry the command at 1-minute intervals a maximum of 5 times.

Continued on next page

Table 3-107. TEST #36 Port Audit and Update Test — *Continued*

Error Code	Test Result	Description/ Recommendation
	PASS	Trunk translation has been updated successfully. The current trunk states kept in the DS1 Interface circuit pack and switch software are consistent. If the trunk is busied out, the test does not run, but returns PASS. To verify that the trunk is in-service: 1. Enter **status-command** to verify that the trunk is in-service. If the trunk is in-service, no further action is necessary. If the trunk is out-of-service, continue to Step 2. 2. Enter **release-trunk** command to put trunk back into in-service. 3. Retry the test command.
0	NO BOARD	The test could not relate the internal ID to the port (no board). This could be due to incorrect translations, no board is inserted, an incorrect board is inserted, or an insane board is inserted. 1. Check to ensure that the board translations are correct. Use the **list config** command, and resolve any problems that are found. 2. If the board was found to be correctly inserted in step 1, issue the **busyout board** command. 3. Issue the **reset board** command. 4. Issue the **release busy board** command. 5. Issue the **test board long** command. This should re-establish the linkage between the internal ID and the port. If this is not the case, check to see that there is a valid board inserted.

DID-TRK (DID Trunk)

MO Name (in Alarm Log)	Alarm Level	Initial Command to Run[1]	Full Name of MO
DID-TRK	MAJOR[2]	test port PCSSpp l	DID Trunk
DID-TRK	MINOR	test port PCSSpp l	DID Trunk
DID-TRK	WARNING	test port PCSSpp l	DID Trunk

1. Where P is the port network number (1 for PPN); C is the carrier designation (for example, A, B, or C); and SS is the address of the slot in the carrier where the circuit pack is located (for example, 01, 02, ..., etc.).
2. A MAJOR alarm on a trunk indicates that alarms on these trunks are not downgraded by the **set options** command and that at least 75 percent of the trunks in this trunk group are alarmed.

Direct Inward Dial (DID) trunks coming from the Central Office (CO) allow outside parties to call directly to an extension in the system. DID Trunk circuit packs include:

TN753	United States
TN2146	Belgium and the Netherlands
TN2139	Italy
TN 436	Australia
TN459	United Kingdom

The DID Trunk circuit packs support eight, incoming-only, ports. Each port provides an interface between the 2-wire analog line from the CO and the DEFINITY system. The DID port receives 3 to 5 digits from the CO that is used to directly connect an outside caller to the called station without assistance from an attendant. See Figure 3-8.

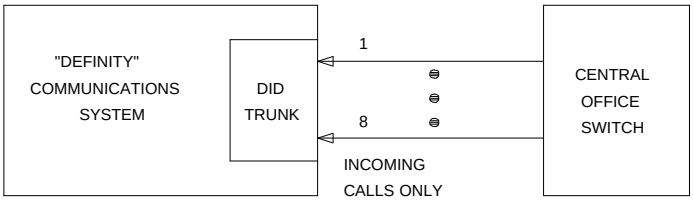

Figure 3-8. DID Trunk Interactions

For each call, the CO switch signals the system by opening and closing individual DID loops (one of the eight ports) and causing the starting or stopping of loop current.

A DID trunk operation involves three significant aspects:

1. Transmission—deals with the interface requirements regarding all AC signals. Transmission includes gain, analog to digital encoding, and digital to analog decoding.
2. Signaling—involves interpretation of DC signals appearing on Tip and Ring to and from the CO. These signals include off-hook, on-hook, and dial pulse detection.
3. Switch Connection—involves the connection between the trunk circuitry and the TDM Bus of the system. It operates the switchhook connection to the TDM Bus.

Four tests are implemented to diagnose the health of a DID trunk. All of them test on-board circuitry only. They are:

1. Loop Around and Conference Circuit Test—verifies the transmission operation of the circuit pack (loop around within the port), and checks the conference capabilities of all ports.

   This test may fail due to noise induced by adjacent electric power lines. Customers having this problem should resolve it with their local power company. To temporarily alleviate the alarm caused by the failure of this test, the test may be disabled from trunk administration Test field. (This also disables the port diagnostic test).

2. NPE Crosstalk Test—verifies the switch connection operation of the circuit pack. The test also verifies that the trunk circuitry only talks on the selected time slot on the TDM Bus and never crosses over to time slots reserved for other connections.

3. Port Diagnostic Test—the battery feed circuitry is tested for hook detection.
4. Port Audit Update Test—updates the DID translation information on individual ports of the DID trunk. The port translation data consists of signaling parameters whose values depend on the CO switch connected to the trunk. These parameters include:
   - wink (signal indicating PBX is ready to receive digits) or immediate start
   - dial tone or rotary dialing trunk
   - rotary dialing inter-digit timing
   - network balance R/RC
   - disconnect timing

Additional in-line testing is performed while a call is in progress. Thus, in-line errors may occur during operation. See Error Log table for a description of these errors. These errors may be reproduced by using the trunk (that is, placing a call) and checking their occurrence in the Hardware Error Log.

Problems detected during signaling may be caused by faults off-board (in the CO switch or connections) for which a Warning alarm is raised.

Before a maintenance test can be run on a port, the port must be idle. If an incoming call seizes the port which is being tested by maintenance, the test is aborted, and the incoming call proceeds.

For transmission and signaling standard specification, refer to Digital PBX Standards document RS4648.

Hardware Error Log Entries and Test to Clear Values

Table 3-108. DID Trunk Error Log Entries

Error Type	Aux Data	Associated Test	Alarm Level	On/Off Board	Test to Clear Value
0[1]	0	Any	Any	Any	test port PCSSpp sh r 1
1 (a)	Any	None	WRN	OFF	
1 (b)	57476	None	WRN	OFF	
1 (c)	57477	None	WRN	OFF	
1 (d)	57483	None	WRN	OFF	

Continued on next page

Table 3-108. DID Trunk Error Log Entries — *Continued*

Error Type	Aux Data	Associated Test	Alarm Level	On/Off Board	Test to Clear Value
15 (e)	Any	Port Audit Update (#36)			
18	0	busyout trunk <grp/mbr>	WRN	OFF	release trunk <grp/mbr>
130 (f)		None	WRN	ON	test trunk <grp>/<mbr>
257 (g)	57472	None	WRN	OFF	
257 (h)	57473	None	WRN	OFF	
257 (i)	57474	None	WRN	OFF	
257 (j)	57475	None	WRN	OFF	
513 (k)	57392	None	MAJ/MIN/ WRN[2]	OFF	
510 (l)	57393	None			
769	Any	Port Diagnostic (#35)	MAJ/MIN/ WRN[2]	ON	test port PCSSpp r 3
1025		Loop Around and Conference (#33)	MAJ/MIN/ WRN[2]	ON	test port PCSSpp r 3
1281		NPE Crosstalk (#6)	MAJ/MIN/ WRN[2]	ON	test port PCSSpp r 3
1537	Any	Port Diagnostic (#35)	MAJ/MIN/ WRN[2]	OFF	test port PCSSpp r 3
1793 (m)	57489	None	None		

1. Run the Short Test Sequence first. If all tests pass, run the Long Test Sequence. Refer to the appropriate test description and follow the recommended procedures.
2. Minor alarms on this MO may be downgraded to Warning alarms based on the values used in the **set options** command. If the Minor alarm is not downgraded by the **set-options** values, the Minor alarm is upgraded to a Major alarm if 75 percent of the trunks in this trunk group are alarmed.

Notes:

A common trouble on DID trunks, which reports no errors or alarms, occurs when the CO busies out the port (disconnects port). This situation occurs when the CO thinks there are problems with the DID port. In this case, no incoming calls are possible through this port. In addition to complaints received from outside callers trying unsuccessfully to call in, this problem can be diagnosed by listing measurements on lightly used trunks. If a particular port is detected as not in use, a call to the CO is necessary to get the connection back in service.

a. This condition occurs when the tone detector times out waiting for digits.

1 – Verify trunk administered wink/immediate-start parameter.

2 – Verify the dial type.

3 – Refer problem to the CO.

b. Rotary dial before wink – This condition occurs when the CO starts dialing before the PBX sends wink on a wink-start trunk. 1 – Verify trunk administered wink/immediate-start parameter.

2 – Refer problem to CO.

c. Rotary dial too early – This condition occurs when the CO starts dialing too soon after seizure on an immediate-start trunk.

1 – Verify trunk administered wink/immediate-start parameter.

2 – Refer problem to CO.

d. Rotary dial pulse during wink – This condition occurs when the CO sends rotary dial digits too soon after seizure on a wink-start trunk.

1 – Verify trunk administered wink/immediate-start parameter.

2 – Refer problem to CO.

e. This is a software audit error that does not indicate any hardware malfunction. Run the Short Test Sequence and investigate associated errors (if any).

f. This error type indicates that the circuit pack has been removed or has been insane for more than 11 minutes. To clear the error, reinsert or replace the circuit pack.

g. Rotary dial pulse on-hook longer than 105 msec – Break between rotary pulses is too long.

1 – Test trunk by performing an incoming test call.

2 – Refer problem to CO.

h. Rotary dial rate below eight pulses/sec – More than 135 msec between two successive breaks.

1 – Verify trunk administered interdigit-timing parameters.

2 – Refer problem to CO.

i. Rotary dial rate above 12 pulses/sec – Less than 75 msec between two successive breaks.

1 – Verify trunk administered interdigit-timing parameters.

2 – Refer problem to CO.

j. Digit detection – Co is starting new rotary dial digit within 150 msec of previous digit.

1 – Verify trunk administered interdigit timing parameters.

2 – Refer problem to CO.

k. Loop current active – CO not releasing trunk after PBX disconnect. Occurs when the PBX end drops first and the CO does not release the trunk within four minutes.

   1 – Verify the interface to the network with a hand telephone set. If calls are placed correctly, then refer problem to the CO.

   2 – If unable to place calls or this equipment is not available, check the status on port using the **status trunk** command. If active but not connected, disconnect bridging clips at the network interface. Check status on the trunk. If trunk went idle, then replace clips. If trunk is still active but unable to place calls, refer problem to the CO.

l. Late CO trunk release – This event only happens after the occurrence of Error Type 513. The CO released the trunk four minutes after the PBX dropped the call. This event decrements the severity (error count) of Error Type 513, or may mean the problem related to Error Type 513 has been fixed.

   1 – Verify that Error Type 513 does not occur again. Refer to Error 513.

m. Incomplete Dial timer expired. This error applies only to the TN459. Problem with incoming dialing stream. Refer problem to the CO.

System Technician-Demanded Tests: Descriptions and Error Codes

Always investigate tests in the order presented in the table below when inspecting errors in the system. By clearing error codes associated with the *DID-TRK Loop Around and Conference Circuit Test,* for example, you may also clear errors generated from subsequent tests in the testing sequence.

Order of Investigation	Short Test Sequence	Long Test Sequence	D/ND[1]
NPE Crosstalk Test (#6)		X	ND
Port Diagnostic Test (#35)	X	X	ND
Loop Around and Conference Circuit Test (#33)		X	ND
Port Audit Update Test (#36)	X	X	ND

1. D = Destructive; ND = Nondestructive

NPE Crosstalk Test (#6)

One or more NPEs reside on each circuit pack with a TDM Bus interface. The NPE controls port connectivity and gain, and provides conferencing functions on a per-port basis. The NPE Crosstalk Test verifies that this port's NPE channel talks on the selected time slot and never crosses over to time slots reserved for

other connections. If the NPE is not working correctly, one-way and noisy connections may be observed. This test is usually only part of a port's Long Test Sequence and takes about 20 to 30 seconds to complete.

Table 3-109. TEST #6 NPE Crosstalk Test

Error Code	Test Result	Description/ Recommendation
	ABORT	Could not allocate the necessary system resources to run this test. 1. Retry the command at 1-minute intervals a maximum of 5 times.
1000	ABORT	System resources required to run this test are not available. The port may be busy with a valid call. Use the **display port PCSSpp** command to determine the station extension, attendant number, or trunk group/member number of the port. Use the **status station**, **status attendant**, or **status trunk** command to determine the service state of the port. If the service state indicates that the port is in use, then the port is unavailable for certain tests. You must wait until the port is idle before retesting. Attendants are always in use (off-hook) if the handset is plugged in and the port is not busied out. 1. If the port status is active but the port is not in use (no calls), then check the Error Log for Error Type 513 (see Error Log table for description of this error and required actions). The port may be locked up. 2. If the port status is idle, then retry the command at 1-minute intervals a maximum of 5 times.
1001	ABORT	Could not allocate the necessary system resources to run this test. This could be due to a failure to seize the port. 1. Retry the command at 1-minute intervals a maximum of 5 times.
1002	ABORT	The system could not allocate time slots for the test. The system may be under heavy traffic conditions or it may have time slots out-of-service due to TDM-BUS errors. Refer to TDM-BUS (TDM Bus) Maintenance documentation to diagnose any active TDM-BUS errors. 1. If system has no TDM-BUS errors and is not handling heavy traffic, repeat test at 1-minute intervals a maximum of 5 times.
1003	ABORT	The system could not allocate a tone receiver for the test. The system may be oversized for the number of Tone Detectors present or some Tone Detectors may be out-of-service. 1. Look for TTR-LEV errors in the Error Log. If present, refer to TTR-LEV (TTR Level) Maintenance documentation. 2. Look for TONE-PT errors in the Error Log. If present, refer to TONE-PT (Tone Generator) Maintenance documentation. 3. If neither condition exists, retry the test at 1-minute intervals a maximum of 5 times.

Continued on next page

Table 3-109. TEST #6 NPE Crosstalk Test — *Continued*

Error Code	Test Result	Description/ Recommendation
1004	ABORT	The port was seized by a valid call during the test. The test has been aborted. Use the **display port PCSSpp** command to determine the station extension, attendant number, or trunk group/member number of the port. Use the **status station**, **status attendant**, or **status trunk** command to determine the service state of the port. If the service state indicates that the port is in use, then the port is unavailable for certain tests. You must wait until the port is idle before retesting. Attendants are always in use (off-hook) if the handset is plugged in and the port is not busied out. 1. Retry the command at 1-minute intervals a maximum of 5 times.
2000	ABORT	Response to the test request was not received within the allowable time period.
2100	ABORT	Could not allocate the necessary system resources to run this test. This could be due to a failure to seize the port. 1. Retry the command at 1-minute intervals a maximum of 5 times.
Any	FAIL	This test can fail due to on-board or off-board problems. Off-board problems of concern include EXP-INTF faults, TDM-BUS faults, and faults associated with the tone detectors/tone generators. Clear all off-board problems before replacing the board. Keep in mind that a TDM-BUS problem is usually the result of a faulty board connected to the backplane or bent pins on the backplane. 1. Look for EXP-INTF errors in the error log. If present, refer to the EXP-INTF Maintenance documentation. 2. Look for TDM-BUS errors in the error log. If present, refer to the TDM-BUS Maintenance documentation. 3. Look for TONE-BD and/or TONE-PT errors in the error log. If present, refer to the TONE-BD Maintenance documentation and the TONE-PT Maintenance documentation. 4. Test the board when the faults from steps 1, 2, and 3 are cleared. Replace the board only if the test fails.
	PASS	The port is correctly using its allocated time slots. User-reported troubles on this port should be investigated using other port tests and by examining station, trunk, or external wiring.

Continued on next page

Table 3-109. TEST #6 NPE Crosstalk Test — *Continued*

Error Code	Test Result	Description/ Recommendation
0	NO BOARD	The test could not relate the internal ID to the port (no board). 1. Check to ensure that the board translations are correct. Translate the board, if necessary. 2. Issue the **busyout board** command. 3. Issue the **reset board** command. 4. Issue the **release busy board** command. 5. Issue the **test board** command. This should re-establish the linkage between the internal ID and the port.

Loop Around and Conference Circuit Test (#33)

This test checks the reflective and non-reflective loop around and conference capabilities of a DID port circuit. The test that uses 404-Hz, 1004-Hz, and 2804-Hz tones is an on-board test only. Each tone is separately transmitted to and from the port (loop around within the port) and verified.

This test may fail due to noise induced by adjacent electric power lines. Customers having this problem should resolve it with their local power company. To temporarily alleviate the alarm caused by the failure of this test, the test may be disabled from trunk administration Test field. (This also disables the port diagnostic test.

Table 3-110. TEST #33 Loop Around and Conference Circuit Test

Error Code	Test Result	Description/ Recommendation
	ABORT	Could not allocate the necessary system resources to run this test. This could be due to a failure to seize the port. 1. Retry the command at 1-minute intervals a maximum of 5 times.

Continued on next page

Table 3-110. TEST #33 Loop Around and Conference Circuit Test — *Continued*

Error Code	Test Result	Description/ Recommendation
1000	ABORT	System resources required to run this test are not available. The port may be busy with a valid call. Use the **display port PCSSpp** command to determine the station extension, attendant number, or trunk group/member number of the port. Use the **status station**, **status attendant**, or **status trunk** command to determine the service state of the port. If the service state indicates that the port is in use, then the port is unavailable for certain tests. You must wait until the port is idle before retesting. Attendants are always in use (off-hook) if the handset is plugged in and the port is not busied out. 1. If the port status is active but the port is not in use (no calls), check the Error Log for Error Type 513 (see Error Log table for description of this error and required actions). The port may be locked up. 2. If the port status is idle, then retry the command at 1-minute intervals a maximum of 5 times.
1004	ABORT	The port was seized by a valid call during the test. The test has been aborted. Use the **display port PCSSpp** command to determine the station extension, attendant number, or trunk group/member number of the port. Use the **status station**, **status attendant**, or **status trunk** command to determine the service state of the port. If the service state indicates that the port is in use, then the port is unavailable for certain tests. You must wait until the port is idle before retesting. Attendants are always in use (off-hook), if the handset is plugged in and the port is not busied out. 1. Retry the command at 1-minute intervals a maximum of 5 times.
1018	ABORT	Test disabled via administration. Verify that the "Maintenance Tests?" field on the Trunk Group Form is set to "n." To enable the test, issue the **change trunk-group x** command where "x" equals the number of the trunk group to be tested. Then change the entry in the "Maintenance Tests?" field on the form to "y."
2000	ABORT	Response to the test was not received within the allowable time period. 1. Retry the command at 1-minute intervals for a maximum of 5 times.
2100	ABORT	System resources required to run this test are not available. This may be due to the port being seized. 1. This abort code is usually associated with tone-clock (TONE-BD, TONE-PT, and TDM-CLK) resources. First, clear any tone errors in the error log. 2. Retry the command at 1-minute intervals for a maximum of 5 times.

Continued on next page

Table 3-110. TEST #33 Loop Around and Conference Circuit Test — *Continued*

Error Code	Test Result	Description/ Recommendation
3	FAIL	The nonreflective 1004 Hz tone test of the port failed. An echo was detected from the port. Poor quality transmission was detected to or from the port. The problem may be off-board.
7		The conference capabilities of the port failed. Poor quality transmission was detected to or from the port. The problem may be off-board.
129		The reflective 404-Hz tone test failed. Poor quality transmission was detected to or from the port. The problem may be off-board.
131		The reflective 1004-Hz tone test failed. Poor quality transmission was detected to or from the port. The problem may be off-board.
133		The reflective 2804-Hz tone test failed. Poor quality transmission was detected to or from the port. The problem may be off-board. **CAUTION:** *The port may still be operational, or the fault may be off-board (connections or CO). Off-board problems also include incoming seizures or off-hook port seizures during the test and, perhaps somewhat unlikely, noise induced by adjacent electric power lines. Customers having this problem should resolve it with their local power company to temporarily alleviate the alarm caused by the failure of this test. The test may be disabled from trunk administration 'Test' field. This turns off all testing for that trunk group except for tests 6 and 36.* FAULT ISOLATION: Proceed as follows unless power or tone problems are suspected (see note below). 1. To make sure the problem is on-board, disconnect the port from the far-end and retry the test. Coordinate this with the CO, or do it after busy hours. 2. If the retry fails, replace the circuit pack. 3. If the retry passes and no troubles have been reported, disable the test in the trunk group administration. If the retry passes and troubles have been reported, coordinate isolation with the CO. If the loop around and conference circuit test fails for all ports on a circuit pack, a -5 volt power problem is indicated.
	PASS	DID Trunk Loop Around and Conference Test is successful. This port is functioning properly. 1. If users are reporting troubles, examine loop connections to the port and refer problem to the CO.

Continued on next page

Table 3-110. TEST #33 Loop Around and Conference Circuit Test — *Continued*

Error Code	Test Result	Description/ Recommendation
0	NO BOARD	The test could not relate the internal ID to the port (no board). 1. Check to ensure that the board translations are correct. Translate the board, if necessary. 2. Issue the **busyout board** command. 3. Issue the **reset board** command. 4. Issue the **release busy board** command. 5. Issue the **test board** command. This should re-establish the linkage between the internal ID and the port.

Port Diagnostic Test (#35)

This test checks a port's battery feed circuitry. The battery feed circuitry is tested for on-/off-hook detection, battery shutdown, and battery reversal (WINK) capabilities.

Table 3-111. TEST #35 Port Diagnostic Test

Error Code	Test Result	Description/ Recommendation
	ABORT	System resources required to run this test were not available. 1. Retry the command at 1-minute intervals a maximum of 5 times.

Continued on next page

Table 3-111. TEST #35 Port Diagnostic Test — *Continued*

Error Code	Test Result	Description/ Recommendation
1000	ABORT	System resources required to run this test were not available. The port may be busy with a valid call. Use the **display port PCSSpp** command to determine the trunk group/member number of the port. Use the **status trunk** command to determine the service state of the port. If the service state indicates that the port is in use, then the port is unavailable for certain tests. You must wait until the port is idle before retesting. 1. If the port status is active but the port is not in use (no calls), then check the error log for error type 513 (refer to the Error Log table for a description of this error and required actions). The port may be locked up. 2. If the port status is idle, busyout and release the trunk, and then retry the command at 1-minute intervals for a maximum of 5 times. 3. If the test continues to abort, check for wiring errors toward the CO which may cause the trunk to lock up. 4. If the wiring is OK and the test continues to abort, replace the TN753.
1004	ABORT	The port was seized by a valid call during the test. The test has been aborted. Use the **display port PCSSpp** command to determine the station extension, attendant number, or trunk group/member number of the port. Use the **status station**, **status attendant**, or **status trunk** command to determine the service state of the port. If the service state indicates that the port is in use, then the port is unavailable for certain tests. You must wait until the port is idle before retesting. Attendants are always in use (off-hook) if the handset is plugged in and the port is not busied out. 1. Retry the command at 1-minute intervals a maximum of 5 times.
1018	ABORT	Test has been disabled by trunk group administration. Verify that the `Maintenance Tests?` field on the Trunk Group Form is set to **n**. To enable the test, issue the **change trunk-group x** command where "x" equals the number of the trunk group to be tested. Then change the entry in the `Maintenance Tests?` field on the form to **y**.
2000	ABORT	Response to the test request was not received within the allowable time period.
2100	ABORT	Could not allocate the necessary system resources to run this test. 1. Retry the command at 1-minute intervals a maximum of 5 times.

Continued on next page

Table 3-111. TEST #35 Port Diagnostic Test — *Continued*

Error Code	Test Result	Description/ Recommendation
61446	FAIL	Battery feed test failed. A loop current fault was detected. This is most probably an incoming CO-line problem. This failure code is only reported by the TN2139 Italian DID circuit pack. 1. Check the incoming CO-line for loop current. If none is detected refer the problem to the CO. 2. If the CO-line checks out OK, the failure must be on the DID port. Replace the circuit pack.
61456	FAIL	Battery feed test failed. An on-board problem was detected. This port is out-of-service. 1. Replace circuit pack.
61472	FAIL	Battery feed test failed. A problem with the incoming CO-line was detected. 1. Check the incoming CO-line for proper operation. If warranted, refer the problem to the CO. 2. If the CO-line checks out OK, the failure must be on the DID port. Replace the circuit pack.
	PASS	Current flow was detected for this port. 1. User-reported troubles on this port should be investigated using other port tests and by examining connections. 2. Refer problem to the CO.
0	NO BOARD	The test could not relate the internal ID to the port (no board). 1. Check to ensure that the board translations are correct. Translate the board, if necessary. 2. Issue the **busyout board** command. 3. Issue the **reset board** command. 4. Issue the **release busy board** command. 5. Issue the **test board** command. This should re-establish the linkage between the internal ID and the port.

Port Audit Update Test (#36)

This test sends updates of the DID port translation for all ports on the circuit pack that have been translated. The update is non-disruptive and guards against possible corruption of translation data contained on the circuit pack. No response message is expected from the circuit pack once it receives translation

updates. The port translation data includes: wink or immediate start trunk, dial tone or rotary dialing trunk, rotary dialing inter-digit timing, Network balance R/RC, and disconnect timing.

Table 3-112. TEST #36 Port Audit Update Test

Error Code	Test Result	Description/ Recommendation
	ABORT	Could not allocate the necessary system resources to run this test. 1. Retry the command at 1-minute intervals a maximum of 5 times.
1006	ABORT	The port has been placed out of service, perhaps by craft busyout. Use the **display port PCSSpp** command to determine the trunk group/member number of the port. Use the **status trunk** command to determine the service state of the port. If the service state indicates that the port is out of service, then the port is unavailable for certain tests. You must wait until the port is in service and idle before retesting. 1. If the port status is in service and idle, then retry the command at 1-minute intervals for a maximum of 5 times.
2100	ABORT FAIL	Could not allocate the necessary system resources to run the test. Internal system error 1. Retry the command at 1-minute intervals a maximum of 5 times.
	PASS	This test passed. Translation information was successfully updated on the circuit pack. 1. If signaling troubles are reported (Error Types 1, 257, or 513 in Error Log table), verify translation information for this port. 2. Refer problem to the CO. If the trunk is busied out, the test does not run, but returns PASS. To verify that the trunk is in-service: 1. Enter **status-command** to verify that the trunk is in-service. If the trunk is in-service, no further action is necessary. If the trunk is out-of-service, continue to Step 2. 2. Enter **release-trunk** command to put trunk back into in-service. 3. Retry the test command.

Continued on next page

Table 3-112. TEST #36 Port Audit Update Test — *Continued*

Error Code	Test Result	Description/ Recommendation
0	NO BOARD	The test could not relate the internal ID to the port (no board). 1. Check to ensure that the board translations are correct. Translate the board, if necessary. 2. Issue the **busyout board** command. 3. Issue the **reset board** command. 4. Issue the **release busy board** command. 5. Issue the **test board** command. This should re-establish the linkage between the internal ID and the port.

DIG-BD (Digital Line Circuit Pack)

MO Name (in Alarm Log)	Alarm Level	Initial Command to Run[1]	Full Name of MO
DIG-BD	MIN	test board PCSS sh	Digital Line Circuit Pack
DIG-BD	WRN	test board PCSS sh	Digital Line Circuit Pack

1. Where P is the port network number (1 for PPN); C is the carrier designation (for example, A, B, or C); and SS is the address of the slot in the carrier where the circuit pack is located (for example, 01, 02, ..., etc.).

Refer to XXX-BD (Common Port Circuit Pack) Maintenance documentation for circuit pack level errors. See also DIG-LINE (Digital Line) Maintenance documentation for related line information.

DIG-LINE (Digital Line)

MO Name (in Alarm Log)	Alarm Level	Initial Command to Run[1]	Full Name of MO
DIG-LINE	MINOR	test port PCSSpp l	Digital Line
DIG-LINE	WARNING	test port PCSSpp sh	Digital Line

1. Where P is the port network number (1 for PPN); C is the carrier designation (for example, A, B, or C); SS is the address of the slot in the carrier where the circuit pack is located (for example, 01, 02, ..., etc.); and pp is the 2-digit port number (for example, 01).

DIG-LINE maintenance monitors and tests ports on Digital Line circuit packs and the hardware connected to those ports for lines administered as a digital station. These include stations with just a digital voice terminal and stations with a digital voice terminal and a linked data module. Stand-alone data modules, and data adaptors in stand-alone mode, are covered by the PDMODULE and TDMODULE maintenance objects. Circuit pack-level maintenance is covered by DIG-BD whose strategy is described in the XXX-BD section of this chapter. The following circuit packs support digital lines:

Table 3-113. Digital Line Circuit Packs

Code	Ports	Type	Companding	Endpoints
TN754	8	4-wire DCP	mu-law	7400 series digital voice terminals, attendant consoles, 510D personal terminals, MT515 BCTs, DCP data modules
TN754B	8	4-wire DCP	A-law/mu-law	
TN2181	16	2-wire IDCP	A-law/mu-law	
TN2224	24	2-wire IDCP	A-law/mu-law	
TN2136	8	2-Wire IDCP	A-law/mu-law	Data Adaptors (DA), Italtel Digital Telephone Models 1 and 2 (IDT1/2).
TN2181	16	2-wire IDCP	A-law/mu-law	
TN2224	24	2-wire IDCP	A-law/mu-law	

Each digital line port supports two 64 kbps information channels (primary and secondary) and one 8kbps signaling channel. Digital voice terminals always use the primary information channel. Thus only one voice terminal can be connected to each port. The secondary information channel can be used to connect a data terminal via a Digital Terminal Data Module (DTDM) or a Data Adaptor (DA). All other devices currently supported by Digital Line circuit packs communicate on the primary information channel. Figure 10-26 shows examples of digital line connectivity.

Only the TN754B or TN2136 should be used in out-of-building applications. For important information pertaining to protection required for out-of-building digital

voice terminals, see *DEFINITY Enterprise Communications Server Release 6 Installation and Test for Single-Carrier Cabinet,* 555-230-894.

It should be noted that TN2181 and TN2224 support both modes as shown in Figure 3-9 and Figure 3-10.

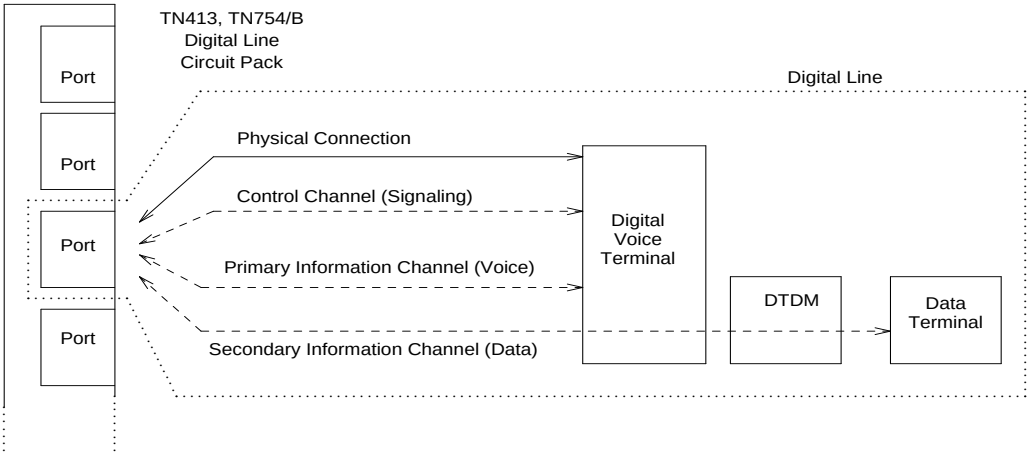

Figure 3-9. Digital Line Connectivity

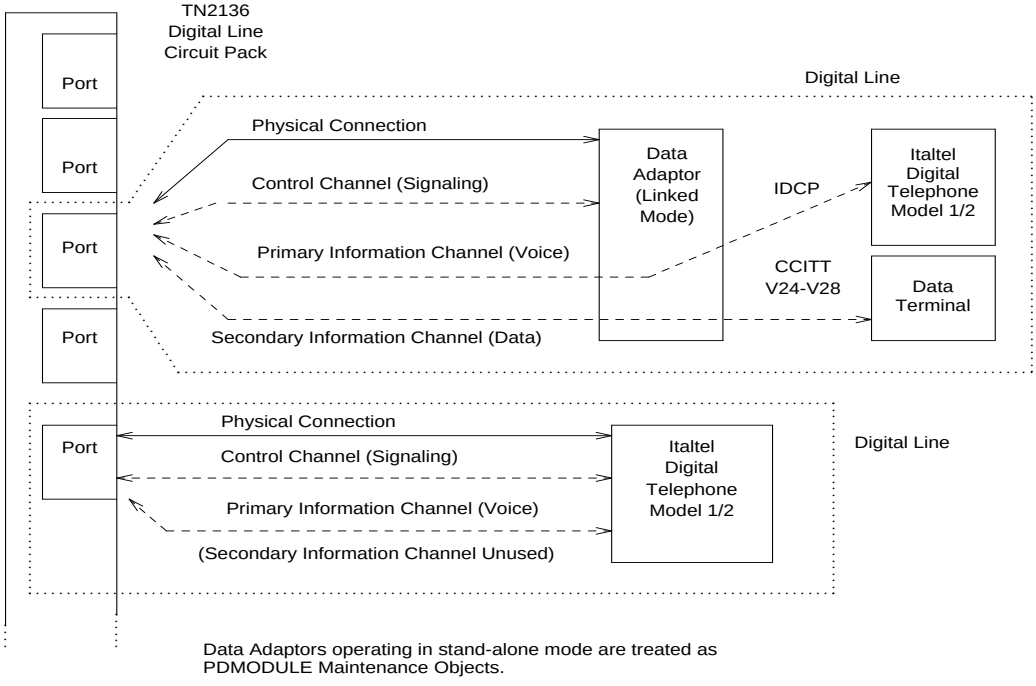

Figure 3-10. Digital Line Connections

Only 2-wire Italtel Digital Telephone Models 1 and 2 (IDT1/2) or DAs can be directly connected to a TN2136. Lucent DCP (4-wire) digital voice terminals and data modules can be connected to these circuit packs via Italtel's 2/4-wire adapter. DAs can operate in either of two modes which are covered by different maintenance objects:

DA Mode	Administered as:	Endpoint	Maintenance Object
Stand-alone	PDM	Data endpoint only	PDMODULE
Linked	DTDM	IDT1/2 and optional data terminal	DIG-LINE

Digital Line maintenance interacts with Digital Line circuit pack (DIG-BD) maintenance, and results of DIG-LINE testing can be affected by the health of the Digital Line circuit pack. Keep this in mind when investigating reported Digital Line problems.

There are instances where the service state of a station is mentioned. It is helpful to understand what os ment by the different service states that may exist. The

different service states which apply to digital line station are explained as follows.:

Out-of-Service	The port, and thus the station, have been removed from service. Busyouts put the port in the out-of-service state.
Ready-for-Service	The port on the circuit pack has been put into service, but the voice terminal has not yet established signaling communications with the port.
In-Service	The voice terminal has established signaling communications with the port, and the system is ready to process calls to and from that station. A terminal in the ready-for-service state will progress to the in-service state if it is functioning normally. It can also be forced into the in-service state by going off-hook.

Downloading of Terminal Parameters

Programmable Terminals

The following information is presented as background information to help understand how maintenance software interacts with terminal parameter downloading.

Terminal Types:

The following terminals can be downloaded:

a. 84xx multibutton digital voice terminals (8403D01A, 8410B, 8410D02A, 8434D01A) with optional expansion module.

b. 603A1 and 603D1 Callmaster terminals for telemarketing applications.

c. 302B1 attendant console.

Circuit Packs

1. 8400x, 302B1 Terminals
   a. TN754 (4-wire, Mu-law)

      Minimum usable vintage for 8410D and 8434D terminals - V11

   b. TN754B (4-wire, A-law/Mu-law selectable)
   c. TN2181 (2-wire, 16-port, A-law/Mu-law selectable)
   d. TN2224 (2-wire, 24-port, A-law/mu-law selectable)
2. 603A1/D1 Terminals
   a. TN754 (4-wire, Mu-law),
   b. TN754B (4-wire, A-law/Mu-law selectable)

Downloadable Terminal Parameters

The following parameters are downloaded to programmable terminals:

Table 3-114. Downloadable Parameters

Parameter	Scope	Terminal
International Flags (A-law/Mu-law, Display Mode, DLI Voltage level)	System level	84xx, 603x, 302B1
Primary Levels (Transmission & Sidetone)	System level	84xx, 603x, 302B1
Adjunct Levels (Transmission & Sidetone)	System level	84xx
Handset Expander Option	System level	84xx
Administrable Options (Speakerphone & Mute Button)	Per-terminal	84xx
Administrable Softkeys	Per-terminal, System level	8410D, 8434D

Nonvolatile Memory

Nonvolatile memory is used to store downloadable parameters in programmable terminals. Therefore, once the terminal has been downloaded, it is not be necessary to download it again, even if power is removed from the terminal.

If the nonvolatile memory fails with power still present, the terminal reverts to its default factory settings except for its A-law/mu-law companding settings which are stored in RAM. If power is removed after the nonvolatile memory fails, the terminal reverts to its factory default settings.

Mu-law companding is assigned as a default setting at the factory, so, for domestic use, a programmable terminal can place calls even though it has not been downloaded from the PBX.

Download Actions

There are several different scenarios that will cause a terminal to be downloaded. As described below, these can occur as part of background maintenance activity or on demand from the System Access Terminal or from a station.

For the background actions described below, the terminal will be downloaded automatically if a download retry flag for the terminal is set in software. This flag is set at the time translation is loaded at boot time, when translation which affects the parameters of a terminal is changed as part of system administration actions, and when a port is inserted in software as a result of board insertion or translation change.

Automatic Download Actions

1. System Reboot/Restart

   A global download action is started when periodic maintenance tests start after a system reboot/restart regardless of whether the parameters have been downloaded previously.

2. Periodic Tests

   If the download flag is still set when periodic tests are run on a terminal, a download action will occur. This operation is required in case a terminal could not be downloaded previously because it was off-hook at the time the system first booted or because the terminal was off-hook at the time translation associated with downloadable parameters was changed.

   Note that it may take more than an hour for periodic tests to reach the terminal that needs to be downloaded.

3. Terminal Administration

   A downloadable terminal is automatically downloaded when translation changes associated with downloadable parameters are made as part of system administration. As shown in Table 10-128, these changes can be for a specified terminal or may be system-wide. If the change is for system-level parameter, a background global update request is made to download all programmable terminals.

   This global update may take more than an hour for a system with several thousand programmable terminals.

4. Port Insertion

   Whenever maintenance software initiates a request to place a port into service, a terminal download action is started on that terminal if that terminal is programmable. This port insertion action occurs under the following circumstances:

   a. A digital line circuit pack that is physically inserted into the system has ports currently administered for programmable terminals.

      If more than 20 port insertion requests are received within a few seconds, a global download request is started up as a background task. This action updates all programmable terminals instead of just those being inserted. This is done to avoid system overload for situations where there is massive board insertion.

   b. A station port is added to the system by a "**add station**" or "**change station**" command.

   c. A TTI port is activated.

5. Audits

   As part of periodic maintenance, the hardware status audit test queries programmable terminals to determine which levels and/or options are being used. If the reported values are not equal to the administered values, the system will initiate a terminal download action. This audit does NOT check the parameters used for softkeys.

6. Activation of TTI

   A terminal is downloaded automatically when it is activated using the Terminal Translation Initialization feature. Therefore, no special user actions are required for TTI.

   NOTE:
   Plugging the station cord into a terminal does not automatically cause the terminal to be downloaded. If this terminal has factory defaults or if the terminal has been previously downloaded with parameters different than those desired, use one of the demand download actions described below to download the terminal.

Demand Download Actions

1. Busyout/Release Command

   A maintenance demand busyout/release request for a station will cause the terminal to be downloaded regardless of its previous download status.

2. Feature Access Code

   A Refresh Terminal Parameters Feature Access Code can be used to request a terminal download action. When this code is followed by a "#", the programmable parameters for the current terminal are downloaded when the terminal goes on hook. When this code is followed by an extension, the programmable parameters for the specified station are downloaded.

   This Refresh Terminal Parameters Feature Access Code is assigned on the second page of the "feature-access-codes" screen.

   A confirmation is returned if the download request is accepted. A busy tone is returned if the request is made from a different station when the target station is off-hook.

   The first three green call appearance LEDs on the 84xx 603x terminal will be turned on for three seconds if the station was successfully downloaded as a result of an entry of a Refresh Terminal Parameters Facility Access Code. This is not true for the 302B1 terminal.

   There is no visible display on a station for the other background or demand download actions. As described below, the "status station" and "status attendant" screens can be used to check the download status of a specified terminal.

Status of Parameter Downloads

The "status station" and "status attendant" screens display the current download status of individual 84xx, 603, and 301B1 terminals in the Download Status field. The possible download states are:

Table 3-115. Terminal Download Status

Status	Terminal Down Load State
Complete	Terminal successfully downloaded sometime in the past.
Pending	System waiting to download the terminal. This may require the execution of a background periodic test which could take more than an hour. A demand download as described above may also be used to initiate an immediate download.
Not Applicable	Not a programmable terminal.

Possible reasons for terminal being not downloaded include:

— Terminal is off-hook.

— Terminal detected a bad checksum.

— Terminal detected a bad or missing EEPROM (refer to hardware error log).

— Terminal is busy programming data from a previous PROGRAM message.

— Terminal is in the Programming Disabled state.

— Terminal is in the Local Program Options Mode.

— Terminal is disconnected or out of service (use **status station** command).

Hardware Error Log Entries and Test to Clear Values

Table 3-116. DIG-LINE Error Log Entries

Error Type	Aux Data	Associated Test	Alarm Level	On/Off Board	Test to Clear Value
0[1]	0	Any	Any	Any	test port PCSSpp sh r 1
1 (a)	40987	None	WARNING	OFF	
1 (b)	1 to 20	None	WARNING	OFF	
18 (c)	0	busyout port PCSSpp	WARNING	OFF	rel port PCSSpp
130 (d)		None	WARNING	ON	test port PCSSpp sh
257 (e)	40971	None			

Continued on next page

Table 3-116. DIG-LINE Error Log Entries — *Continued*

Error Type	Aux Data	Associated Test	Alarm Level	On/Off Board	Test to Clear Value
513	0	Station (Digital) Audits Test (#17)	WARNING(o)	OFF	test port PCSSpp sh r 6
767 (f)	40964	None	WARNING	OFF	
769 (g)	40963 40988	None	WARNING	OFF	
1026(o)		NONE	WARNING	OFF	
1281	Any	Station (Digital) Audits Test (#17)	WARNING	OFF	test port PCSSpp sh r 4
1537 (h)	40968	None	WARNING	OFF	
1793		Voice & Ctrl. Local Loop Test (#13)	MINOR/ WARNING[2]	ON	test port PCSSpp l r 3
2049		NPE Crosstalk Test (#9)	MINOR/ WARNING[3]	ON	test port PCSSpp l r 3
2304 (n)		None			
2305 (i)	32770	None			
2305 (h)	40967	None			
3840 (k)	40965	None			
3840 (l)	40989	None			
3841 (m)	41029	None			

1. Run the Short Test Sequence first. If all tests pass, run the Long Test Sequence. Refer to the appropriate test description and follow the recommended procedures.
2. Major alarms on this MO may be downgraded to Warning alarms based on the value used in the set options command.
3. Major alarms on this MO may be downgraded to Warning alarms based on the value used in the set options command.

Notes:

a. Could experience a noisy port or link. This is an off-board problem detected by the port circuit. Check for defective wiring, a defective voice terminal, or move voice terminal closer to the switch (in terms of feet of wire from the jack to the switch). If the problem still exists, replace the circuit pack. Once the problem has been resolved, the alarm will be retired after a predetermined amount of time.

b. This Error Type and Aux Data will occur when at least 15 off-board problems have been detected with the link to the terminal. When an error with the link is detected, an on-board counter is incremented.

The user could experience a noisy port or link. This is an off-board problem detected by the port circuit. Check for defective wiring, a defective voice terminal, or move voice terminal closer to the switch (in terms of feet of wire from the jack to the switch). If the problem still exists, replace the circuit pack. Once the problem has been resolved, the alarm will be retired after a predetermined amount of time.

c. This error type is logged when the port in question is busied out by maintenance personnel. Make sure port is released from busyout via the **release port PCSSpp** command.

d. This error type indicates that the circuit pack has been removed or has been insane for more than 21 minutes. To clear the error, reinsert or replace the circuit pack.

e. Problems transmitting to the voice terminal. This problem can be caused by defective wiring. Defective wiring can cause varying degrees of problems on different types of sets. Sets such as the 7410 appear to be more susceptible to wiring problems than other sets. This is usually an on-board problem and can be ignored if no user complaints are received.

f. This is an in-line event that produces this error type when a favorable response is received from running the Digital Line Electronic Power Feed Test (#11). No craft action is necessary. This alarm will be resolved with the passing of time.

g. With Aux Data 40963, this error type is a result of an unfavorable response to the Electronic Power Feed/ Positive Temperature Coefficient Test (#11). With Aux Data 40988, this error type indicates that the EPF/PTC circuit has been turned off due to an overcurrent condition.

   For TN754 vintage 13 or earlier, the EPF circuit senses an overcurrent condition at the voice terminal. Check for a short in the wiring, a damaged jack, an incorrect type of voice terminal, or a defective voice terminal.

   For TN754 vintage 14 or later, TN754B and TN2136, the PTC will open if there is a short on the power line for 1/2 second or longer. The voice terminal is probably not operating properly. Unplug the voice terminal for 30 seconds and then plug it back in. If the voice terminal still does not operate, then check for a short in the wiring, a damaged jack, an incorrect type of voice terminal, or a defective voice terminal.

   Once the problem has been resolved, it may take up to 1 hour for the alarm to clear due to ‘‘leaky bucket’’ strategy. If the problem cannot be resolved by one of the steps above, then replace the circuit pack.

h. An in-line maintenance error has generated an off-board warning due to some problem with the link to the voice terminal. This can be ignored if no user complaints are received. Otherwise, make sure the voice terminal is connected, check for defective wiring, check for a defective voice terminal, and move voice terminal to a jack that is closer to the switch (in terms of feet of wiring between the jack and the switch). If the problem still exists, replace the circuit pack. Once the problem has been resolved, the alarm will be retired after a predetermined amount of time.

i. This indicates that the station went off-hook while it was in the ready-for-service state. Use the **status station** command to determine the state of the station. The off-hook should have moved the station to ready-for-service. No craft action is necessary.

j. This is the code that is generated when the link between the circuit pack and the voice terminal is successfully reset. No craft action is necessary.

k. No terminal is connected to the Digital Line board. No maintenance action is required.

l. An uplink message has been logged indicating that the Electric Power Feed (EPF) is on with no load on it. No action is necessary.

m. The circuit pack's message buffer is full. This may be caused by having many display phones with heavy traffic connected to the circuit pack. No action is necessary.

n. Internal system error. No action is necessary.

o. There is a problem with the voice terminal EEPROM. When the voice terminal is repaired the alarm will be resolved with the passing of time.

System Technician-Demanded Tests: Descriptions and Error Codes

Always investigate tests in the order presented in the table below when inspecting errors in the system. By clearing error codes associated with the *Voice and Control Channel Local Loop Around Test,* for example, you may also clear errors generated from other tests in the testing sequence.

Table 3-117. System Technician-Demanded Tests: DIG-LINE

Order of Investigation	Short Test Sequence	Long Test Sequence	D/ND[1]
Digital Terminal Remote Loop Around Test (#1201)		X	D
Voice and Control Channel Local Loop Around Test (#13)		X	ND
Digital Line NPE Crosstalk Test (#9)		X	ND
Digital Line Electronic Power Feed Test (#11)		X	ND
DIG-LINE Station Lamp Updates Test (#16)	X	X	ND
Station (Digital) Audits Test (#17)	X	X	ND

1. D = Destructive, ND = Non-destructive

Digital Terminal Remote Loop Around Test (#1201)

This test checks the integrity of the connection between the SPE and the attached Digital Terminal and the ability of the terminal and the associated port to send and receive data. This test is based, in principal, on procedure 622 used in system 85 to help isolate digital terminal problems.

A request is presented to the terminal to go into loop back mode. Then data is sent to the terminal and when received back, checked for consistency. This test is run as a part of the craft command "test long" procedure. It is not included in any error recovery strategy and generates no Error Log entries or alarms. To begin the test, Maintenance will ask Call Processing to make the associated end point and port " Maintenance Busy". This test will succeed if the endpoint is "idle". If the reserve request fails then the test will abort. If the request succeeds then the SPE sends a message to loop around both information channels for the digital terminal. First the primary information (voice, Information Channel 1 or I1) channel loop back test is run. The test is performed by sending a digital count from the Tone/Clock circuit pack on the primary information channel time slot and receiving the same digital count with a general purpose tone detector.

If the primary information channel test is successful, the loop around test for the secondary information (data, Information Channel 2 or I2) channel is then performed. This test is the same as the primary information channel loop around test and is performed only if a DTDM is administered, which is also the case for a linked DA.

Only one value (Pass. Fail, or Abort) is generated as a result of the two tests run. If any test fails aborts, the sequence is stopped. Upon completion of this test the associated endpoint and port are moved back into the previous service state.

Table 3-118. TEST #1201 Digital Terminal Remote Loop Around Test

Error Code	Test Result	Description/ Recommendation
	ABORT	Internal system error 1. Retry the command at 1-minute intervals a maximum of 5 times.

Continued on next page

Table 3-118. TEST #1201 Digital Terminal Remote Loop Around Test — *Continued*

Error Code	Test Result	Description/ Recommendation
1000	ABORT	System resources required to run this test are not available. The port may be busy with a valid call. Use the **display port PCSSpp** command to determine the station extension or attendant number of the port. Use **status station** or **status attendant** to determine the service state of the port. If the service state indicates that the port is in use, then the port is unavailable for certain test. You must wait until the port is idle before re-testing. Attendants are always in use (off-hook) if the handset is plugged in and the port is not busied out. 1. If the port status is idle, then retry the command at 1-minute intervals a maximum of 5 times.
1001	ABORT	System resources required to run this test are not available. 1. If the port status is idle, then retry the command at 1-minute intervals a maximum of 5 times.
1002	ABORT	The system could not allocate time slots for the test. The system may be under heavy traffic conditions or it may have time slots out-of-service due to TDM-BUS errors. Refer to TDM-BUS (TDM-Bus) Maintenance to diagnose any active TDM-BUS errors. 1. If the system has no TDM-BUS errors and is not handling heavy traffic, repeat test at 1-minute intervals a maximum of 5 times.
1003	ABORT	The system could not allocate a tone receiver for the test. The system may be oversized for the number of Tone Detectors present or some Tone Detectors may be out of service. 1. Look for TTR-LEV errors in the Error Log. If present refer to TTR-LEV (TTR-Level) Maintenance documentation. 2. Look for TONE-PT errors in the Error Log. If present, refer to TONE-PT (Tone Generator) Maintenance documentation. 3. If neither condition exist, retry the command at 1-minute intervals a maximum of 5 times.
1004	ABORT	The port was seized by a valid call during the test. The test has been aborted. Use the **display port**PCSSpp command to determine the station extension or attendant number of the port. Use **status station** or **status attendant** to determine the service state of the port. If the service state indicates that the port is in use, then the port is unavailable for certain test. You must wait until the port is idle before resetting. Attendants are always in use (off-hook) if the handset is plugged in and the port is not busied out. 1. Retry the command at 1-minute intervals a maximum of 5 times.
1005	ABORT	The installed circuit pack does not support this operation.

Continued on next page

Table 3-118. TEST #1201 Digital Terminal Remote Loop Around Test — *Continued*

Error Code	Test Result	Description/ Recommendation
2000	ABORT	Response to the test request was not received within the allowable time period. 1. Retry the command at 1-minute intervals a maximum of 5 times.
2100	ABORT	System resources required to run this test are not available. 1. Make sure terminal is connected and repeat test. 2. If test fails replace terminal and repeat test. 3. Retry the command at 1-minute intervals a maximum of 5 times.
14	FAIL	The primary channel (voice, Information Channel 1 or I1) is not operating properly. User impact may range from noticing nothing to not being able to use the port. Check the results of Voice and Control Channel Local Loop Test (#13). If that test fails, suspect the Digital Line circuit pack. If that test passes then replace the terminal. If both tests fail and component replacement does not change the results, then: 1. Run circuit pack tests to check the tone generator circuit pack and the Tone Detector circuit pack using the **test board PCSSpp** command. 2. Resolve any problems that are detected on the Tone Generator circuit pack or Tone Detector circuit pack. 3. If the Tone Generator and Tone Detector circuit pack are functioning properly, and the tests still fail, escalate the problem.
1015	ABORT	The system will not allow this test to be run because the station is/has not been busied out. Busy out the station with the **busyout station** command.
16	FAIL	The secondary channel (data Information Channel 2 or I2 is not operating properly. User impact may range from noticing nothing to not being able to use this terminal. Check the results of Voice and Control Channel Local Loop Test (#13). If that test fails, suspect the Digital Line circuit pack. If that test passes then replace the terminal. If both test fail, and component replacement does not change the results, then: 1. Run circuit pack tests to check the tone generator circuit pack and the Tone Detector circuit pack using the **test board PCSSpp** command. 2. Resolve any problems that are detected on the Tone Generator circuit pack or Tone Detector circuit pack. 3. If the Tone Generator and Tone Detector circuit pack are functioning properly, and the tests still fail, escalate the problem.

Continued on next page

Table 3-118. TEST #1201 Digital Terminal Remote Loop Around Test — *Continued*

Error Code	Test Result	Description/ Recommendation
	PASS	Voice and Control Channel Local Loop test passed. All channels are transmitting properly. 1. To be sure that this is not an intermittent problem, repeat this test up to a maximum of ten times to make sure it continues to pass. 2. If complaints persist (noisy connections for voice. corrupted data transfer for data), examine the station, connections, and wiring.

Digital Line NPE Crosstalk Test (#9)

One or more Network Processing Elements (NPEs) reside on each circuit pack with a TDM Bus interface. The NPE controls port connectivity and gain, and provides conferencing functions on a per-port basis. The NPE Crosstalk Test verifies that this port's NPE channel talks on the selected time slot and never crosses over to time slots reserved for other connections. If the NPE is not working correctly, one-way and noisy connections may be observed. This test is part of a port's Long Test Sequence and takes about 20 to 30 seconds to complete. Crosstalk testing is performed on both the primary information channel (voice) and the secondary information channel (data) associated with each digital station port. If this test fails on either channel, the station and the DTDM are taken out-of-service.

Table 3-119. TEST #9 Digital Line NPE Crosstalk Test

Error Code	Test Result	Description/ Recommendation
1	ABORT	During testing of the primary information channel, system resources may not have been available. Also, the port may have been busy during the test. 1. Check the port status. Use the **display port PCSSpp** command to determine the station extension of the port. Use the **status station** command to determine the service state of the port. If the service state indicates that the port is in use, then the port is unavailable for this test. You will have to wait until the port is idle. 2. If the port status is idle, then retry the command a 1-minute intervals a maximum of 5 times.

Continued on next page

Table 3-119. TEST #9 Digital Line NPE Crosstalk Test — *Continued*

Error Code	Test Result	Description/ Recommendation
2	ABORT	During testing of DTDM, system resources may not have been available. Also, the port may have been busy during the test. 1. Check if port is being used. If possible, disconnect by toggling disconnect button on DTDM. Retry command after 1 minute. **WARNING:** *This action will drop the call in progress.*
1000	ABORT	System resources required to run this test are not available. The port may be busy with a valid call. Use **display port PCSSpp** to determine the station extension or attendant number of the port. Use **status station** or **status attendant** to determine the service state of the port. If the service state indicates that the port is in use, then the port is unavailable for certain tests. You must wait until the port is idle before retesting. Attendants are always in use (off-hook) if the handset is plugged in and the port is not busied out. 1. If the port status is idle, then retry the command at 1-minute intervals a maximum of 5 times.
1001	ABORT	System resources required to run this test are not available. 1. Retry the command at 1-minute intervals a maximum of 5 times.
1002	ABORT	The system could not allocate time slots for the test. The system may be under heavy traffic conditions or it may have time slots out-of-service due to TDM-BUS errors. Refer to TDM-BUS (TDM Bus) Maintenance to diagnose any active TDM-BUS errors. 1. If system has no TDM-BUS errors and is not handling heavy traffic, repeat test at 1-minute intervals a maximum of 5 times.
1003	ABORT	The system could not allocate a tone receiver for the test. The system may be oversized for the number of Tone Detectors present or some Tone Detectors may be out-of-service. 1. Look for TTR-LEV errors in the Error Log. If present, refer to TTR (TTR Level) Maintenance documentation. 2. Look for TONE-PT errors in the Error Log. If present, refer to TONE-PT (Tone Generator) Maintenance documentation. 3. If neither condition exists, retry the command at 1-minute intervals a maximum of 5 times.

Continued on next page

Table 3-119. TEST #9 Digital Line NPE Crosstalk Test — *Continued*

Error Code	Test Result	Description/ Recommendation
1004	ABORT	The port was seized by a valid call during the test. The test has been aborted. Use **display port PCSSpp** to determine the station extension or attendant number of the port. Use **status station** or **status attendant** to determine the service state of the port. If the service state indicates that the port is in use, then the port is unavailable for certain tests. You must wait until the port is idle before retesting. Attendants are always in use (off-hook) if the handset is plugged in and the port is not busied out.
1020	ABORT	Test disabled via background testing. Use **status station** command to determine when station is available for testing.
2000	ABORT	Response to the test request was not received within the allowable time period. 1. Retry the command at 1-minute intervals a maximum of 5 times.
1 2	FAIL	The Network Processing Element (NPE) of the tested port was found to be transmitting in error. This will cause noisy and unreliable connections. Failure code 1 indicates that the Crosstalk test failed on the primary channel. Failure code 2 indicates that the Crosstalk test failed on the secondary channel. 1. Replace circuit pack.
	PASS	The port is correctly using its allocated time slots. 1. To be sure that this is not an intermittent problem, repeat this test up to a maximum of 10 times to make sure it continues to pass. 2. If complaints persist, examine the station, connections, and wiring.

Continued on next page

Digital Line Electronic Power Feed/Positive Temperature Coefficient/PPF Test (#11)

For TN754 vintage 13 or earlier, this is an Electronic Power Feed (EPF) restoral test. In this test, the processor requests that the EPF be turned on for a given port, and an attempt is made to turn on the power supply to the station. If no current is drawn, the station is probably not connected. If an overcurrent condition is sensed, there may be a short in the loop. A message is returned reporting that either the EPF was successfully turned on, or that an overcurrent condition was sensed. This test is repeated again 5 seconds later.

For TN754 vintage 14 or later, TN754B and TN2136 this is a Positive Temperature Coefficient (PTC) restoral test. In this test, the processor requests that the PTC be turned on for a given port, and an attempt is made to turn on the power supply to the station. If an overcurrent condition is sensed, there is probably a short on the power line that causing the PTC to open and disconnect the voice terminal. Since the PTC does not have self-restoral capability, the voice terminal must be

manually unplugged for 30 seconds and then plugged back in to restore the PTC. A message is returned reporting that either the PTC was successfully turned on successfully with no problem or an overcurrent condition was sensed. This test is repeated again 5 seconds later.

TN2181 and TN2224 boards carry a Protected Power Feed (PPF) relays, one for each port. Therefore this will be a Protected Power Feed restoral test. The test procedure and its response is same as that of EPF. One of differences between EFP and PPF is that, if the port goes into a overcurrent state, PPF does not report this change of state because it is a transient state which will not last more than 50ms. If the over current persists the power will be shut off automatically and an EPF_off_overcurrent message is sent uplink.

Table 3-120. TEST #11 Digital Line Electronic Power Feed Test

Error Code	Test Result	Description/ Recommendation
	ABORT	Internal System Error 1. Retry the command at 1-minute intervals a maximum of 5 times.
1000	ABORT	System resources required to run this test are not available. The port may be busy with a valid call. Use **display port PCSSpp** to determine the station extension or attendant number of the port. Use **status station** or **status attendant** to determine the service state of the port. If the service state indicates that the port is in use, then the port is unavailable for certain tests. You must wait until the port is idle before retesting. Attendants are always in use (off-hook) if the handset is plugged in and the port is not busied out. 1. If the port status is idle, then retry the command at 1-minute intervals a maximum of 5 times.
	FAIL	Internal system error 1. Retry the command at 1-minute intervals a maximum of 5 times.

Continued on next page

Table 3-120. TEST #11 Digital Line Electronic Power Feed Test — *Continued*

Error Code	Test Result	Description/ Recommendation
	PASS	Electronic Power Feed Test passed. The message to turn on the power to the station was successfully sent to the port. 1. Although this test will never actually return a FAIL result except for the Internal system error (naught/FAIL) described above, it will log an error indicating the real results of the test. Check the Error Log for any entries with Error Types 767 or 769 after the test completes. 2. If Error Type 767 appears in the Error Log, this should indicate that the test sensed no problems with the power to the station. To verify that the station is powered up correctly, run a self-test on the station, if available, and check that all the feature buttons are operating. 3. If Error Type 769 appears in the Error Log, this indicates some problem with the power to the station. Check for a short in the wiring, a damaged jack, a defective voice terminal, or an incorrect type of terminal.

Voice and Control Channel Local Loop Test (#13)

These tests check the information and control channels between the Switch Processing Element (SPE) and the Digital Line port circuit. The SPE sends a message to loop around both the information and control channels for the port. First, the primary information (voice) channel loop back test is run. The test is performed by sending a digital count from the Tone-Clock circuit pack on the primary information channel time slot and receiving the same digital count with a general purpose Tone Detector.

While the primary information channel is still looped around, the Control Channel Loop Around Test is performed. This test consists of sending four different transparent patterns to the on-board microprocessor, receiving them back, and comparing them.

The Loop Around Test for the secondary information (data) channel is then performed. This test is the same as the primary information channel loop around test and is performed only if a DTDM is administered.

A Conference Test is done next for the primary information channel. This test is the same as Conference Test #6.

Only one value (Pass, Fail, or Abort) is generated as a result of four tests run. If any test fails or aborts, the sequence is stopped.

Table 3-121. TEST #13 Voice and Control Channel Local Loop Test

Error Code	Test Result	Description/ Recommendation
	ABORT	Internal system error 1. Retry the command at 1-minute intervals a maximum of 5 times.
1000	ABORT	System resources required to run this test are not available. The port may be busy with a valid call. Use **display port PCSSpp** to determine the station extension or attendant number of the port. Use **status station** or **status attendant** to determine the service state of the port. If the service state indicates that the port is in use, then the port is unavailable for certain tests. You must wait until the port is idle before retesting. Attendants are always in use (off-hook) if the handset is plugged in and the port is not busied out. 1. If the port status is idle, then retry the command at 1-minute intervals a maximum of 5 times.
1001	ABORT	System resources required to run this test are not available. 1. Retry the command at 1-minute intervals a maximum of 5 times.
1002	ABORT	The system could not allocate time slots for the test. The system may be under heavy traffic conditions or it may have time slots out-of-service due to TDM-BUS errors. Refer to TDM-BUS (TDM Bus) Maintenance to diagnose any active TDM-BUS errors. 1. If system has no TDM-BUS errors and is not handling heavy traffic, repeat test at 1-minute intervals a maximum of 5 times.
1003	ABORT	The system could not allocate a tone receiver for the test. The system may be oversized for the number of Tone Detectors present or some Tone Detectors may be out-of-service. 1. Look for TTR-LEV errors in the Error Log. If present, refer to TTR-LEV (TTR Level) Maintenance documentation. 2. Look for TONE-PT errors in the Error Log. If present, refer to TONE-PT (Tone Generator) Maintenance documentation. 3. If neither condition exists, retry the command at 1-minute intervals a maximum of 5 times.
1004	ABORT	The port was seized by a valid call during the test. The test has been aborted. Use **display port PCSSpp** to determine the station extension or attendant number of the port. Use **status station** or **status attendant** to determine the service state of the port. If the service state indicates that the port is in use, then the port is unavailable for certain tests. You must wait until the port is idle before retesting. Attendants are always in use (off-hook) if the handset is plugged in and the port is not busied out. 1. Retry the command at 1-minute intervals a maximum of 5 times.

Continued on next page

Table 3-121. TEST #13 Voice and Control Channel Local Loop Test — *Continued*

Error Code	Test Result	Description/ Recommendation
2000	ABORT	Response to the test request was not received within the allowable time period.
2100	ABORT	Could not allocate the necessary system resources to run this test. 1. Rerun the test at 1-minute intervals a maximum of 5 times.
7	FAIL	Conference Test failed on primary channel. In some cases, users may not notice disruption in service. In extreme cases, conferencing feature may not work at all.
14	FAIL	The primary voice channel is not transmitting properly. User impact may range from noticing nothing to not being able to use this port.
15	FAIL	The control channel between the processor and digital circuit pack is not transmitting properly. User impact may range from noticing nothing to not being able to use the port. Could also be disruptive to other users.
16	FAIL	The secondary voice channel is not transmitting properly. User impact may range from noticing nothing to not being able to use this port. 1. Run circuit pack tests to check the Tone Generator circuit pack and the Tone Detector circuit pack using the **test board PCSSpp** command. 2. Resolve any problems that are detected on the Tone Generator circuit pack or Tone Detector circuit pack. 3. If the Tone Generator and Tone Detector circuit packs are functioning properly, and the test still fails, replace the Digital Line circuit pack.
	PASS	Voice and Control Channel Local Loop test passed. All channels are transmitting properly. 1. To be sure that this is not an intermittent problem, repeat this test up to a maximum of 10 times to make sure it continues to pass. 2. If complaints persist (noisy connections for voice, corrupted data for data transfer), examine the station, connections, and wiring.

DIG-LINE Station Lamp Updates Test (#16)

This test lights all lamps on the terminal as specified. The lamp updates will run only if the station is in-service. The status of the station is checked and the lamp updates are blocked from taking place if the station is not in the in-service state. This test does not affect the status of the Message Waiting lamp.

Table 3-122. TEST #16 DIG-LINE Station Lamp Updates Test

Error Code	Test Result	Description/ Recommendation
	ABORT	Internal system error 1. Retry the command at 1-minute intervals a maximum of 5 times.
1	ABORT	This port may have been busied out by system technician. 1. Look in the Error Log for Error Type 18 (port busied out) for this port. If this error type is present, then release the port via the **release station <extension>** command and run the test again. 2. Make sure that the terminal is connected. 3. Retry the command at 1-minute intervals a maximum of 5 times.
3	ABORT	Station may be in ready-for-service or out-of-service state. 1. Use **status station** command to verify state of station. 2. Make sure the terminal is connected. 3. Retry the command at 1-minute intervals a maximum of 5 times.
1000	ABORT	System resources required to run this test are not available. The port may be busy with a valid call. Use **display port PCSSpp** to determine the station extension or attendant number of the port. Use **status station** or **status attendant** to determine the service state of the port. If the service state indicates that the port is in use, then the port is unavailable for certain tests. You must wait until the port is idle before retesting. Attendants are always in use (off-hook) if the handset is plugged in and the port is not busied out. 1. If the port status is idle, then retry the command at 1-minute intervals a maximum of 5 times.
1392	ABORT	This port is currently a TTI port and the test will not execute on it. 1. Verify that the port is a TTI port using either the **display port** command (the display shows that the port is a TTI port) or the **list config** command (the display shows a `t` for the port). 2. If either **list config** or **display port** indicates that the port is *not* a TTI port, escalate the problem. If both commands indicate that the port is a TTI port, the abort is correct, and no action is necessary.
	FAIL	Internal system error 1. Retry the command at 1-minute intervals a maximum of 5 times.

Continued on next page

Table 3-122. TEST #16 DIG-LINE Station Lamp Updates Test — *Continued*

Error Code	Test Result	Description/ Recommendation
	PASS	The message to light all of the station lamps was sent successfully to the port. 1. Observe the station lamps being lit when running the test. If all lamps do not light successfully, the other Digital Line test results may indicate related problems that will not allow the lamps to light. 2. Investigate by using other Digital Line port tests, and by examining the station, wiring, and connections.

Digital Station Audits Test (#17)

This is a series of six tests which are classified as audits. The SPE sends messages to the on-board microprocessor to perform the following tests. These audits run only if the station is in-service.

- Switchhook Inquiry Test — This is an update of the SPE records according to the circuit pack's records. This inquiry is sent all the way to the voice terminal.
- Bad Scan Inquiry Test — A message is sent uplink which contains a count that is generated due to certain events relating to the link conditions. This can be an indication of communications problems between the Processor and Digital Port circuit pack.
- EPF/PTC Inquiry Test — For a TN754 vintage 13 or earlier, the status of the Electronic Power Feed (EPF) is sent uplink. Possible conditions are: EPF-on-ok, EPF-off, and EPF-no-load. For TN754 vintage 14 or later, TN754B or TN2136, TN2181, TN2224, the status of the Positive Temperature Coefficient (PTC) is sent uplink. Possible conditions are: PTC-on-ok, PTC-off, and PTC-no-load.
- ID Request Test — A request is made to the station for its status. The station sends its configuration information and health information back. This information is checked and a pass/fail result is provided.
- Ringer Update Test — This updates the digital telephone ringer state according to the processor records.
- DTMF Administration Update Test — This is a message to the digital station to refresh the default value which causes the station to send touch-tones only in the primary information channel. This value is set initially when the station is put in-service and every time the station's state changes from other states to in-service.

Table 3-123. TEST #17 Station (Digital) Audits Test

Error Code	Test Result	Description/ Recommendation
1	ABORT	Switchhook audit timed out.
2	ABORT	ID request fails, health bit returned from voice terminal is bad. 1. Make sure voice terminal is connected and repeat test. 2. If test fails, replace voice terminal and repeat test.
3	ABORT	The EPF/PTC has detected an overcurrent condition. 1. For a TN754 vintage 13 or earlier Digital Line circuit pack, issue the **test PCSSpp long** command. If Test #11 passes, then the EPF/PTC condition has been cleared. Rerun the Short Test Sequence. If Test #11 does not pass, follow the repair procedures described for Test #11. 2. Look for Error Type 769 logged against DIG-LINE and follow the procedures in the associated footnote. If any additional problems are found after completion of maintenance procedures, rerun the test.
4	ABORT	Internal system error 1. Resolve any outstanding circuit pack maintenance problems. 2. Retry the command at 1-minute intervals a maximum of 5 times.
5	ABORT	Ringer update aborted due to station being in ready-for-service or out-of-service state.
6	ABORT	This port may have been busied out by system technician. 1. Look in the Error Log for Error Type 18 (port busied out) for this port. If this error type is present, the release the port via the **release station** 2. Make sure that the terminal is connected. 3. Retry the command at 1-minute intervals a maximum of 5 times.
1000	ABORT	System resources required to run this test are not available.
1392	ABORT	This port is currently a TTI port and the test will not execute on it. 1. Verify that the port is a TTI port using either the **display port** command (the display shows that the port is a TTI port) or the **list config** command (the display shows a `t` for the port). 2. If either **list config** or **display port** indicate that the port is *not* a TTI port, escalate the problem. If both commands indicate that the port is a TTI port, the abort is correct, and no action is necessary.

Continued on next page

Table 3-123. TEST #17 Station (Digital) Audits Test — *Continued*

Error Code	Test Result	Description/ Recommendation
2000	ABORT	Response to the test request was not received within the allowable time period.
	FAIL	Internal system error 1. Retry the command at 1-minute intervals a maximum of 5 times.
	PASS	Station Audits passed. This Digital Port circuit pack is functioning properly. 1. If complaints persist, investigate by using other port tests, and by examining the station, wiring, and connections.

DIOD-DS1 (DS1 DIOD Trunk)

MO Name (in Alarm Log)	Alarm Level	Initial Command to Run	Full Name of MO
DIOD-DS1	MAJOR[1]	test trunk *group# member#* l	DS1 DIOD Trunk
DIOD-DS1	MINOR	test trunk *group# member#* l	DS1 DIOD Trunk
DIOD-DS1	WARNING	test trunk *group# member#*	DS1 DIOD Trunk

1. A Major alarm on a trunk indicates that alarms on these trunks are not downgraded by the **set options** command and that at least 75 percent of the trunks in this trunk group are alarmed.

NOTE:
Many trunk problems are caused by incorrect settings of parameters on the trunk group administration form. Settings must be compatible with the local environment and with parameter settings on the far-end. Refer to *DEFINITY Enterprise Communications Server Release 6 Administration and Feature Description,* 555-230-522, for information on how to administer trunks. The Application Notes section of that book shows the correct settings for administrable timers and other parameters on a country-by-country basis.

A DS1 DIOD trunk provides a link for digitized voice or data communications between the system and a central office switch. There are two types of DS1 interfaces:

- 24 DS0 channels on a 1.544 Mbps link
- 31 DS0 channels + 1 framing channel on a 2.048 Mbps link
- 32-channel mode is supported only on TN464 circuit packs and on G3r V2 systems.

The DS1-DIOD maintenance object monitors and maintains a DIOD trunk port on a TN464 UDS1 Interface circuit pack. See UDS1-BD in this chapter for more information about this circuit pack. The DS1 circuit pack supports low level CO trunk signaling interfaces for both ground-start and loop-start trunks. This maintenance strategy covers the in-line errors log, initialization tests, periodic tests, scheduled tests, demand tests, and alarm resolution and escalation.

Three trunk service states are specified by DS1 DIOD trunk maintenance:

out-of-service	The trunk is in a deactivated state and cannot be used for either incoming or outgoing calls.
in-service	The trunk is in an activated state and can be used for both incoming and outgoing calls.
disconnect (ready-for-service)	The trunk is in an activated state but can only be used for an incoming call.

Hardware Error Log Entries and Test to Clear Values

Table 3-124. DS1 DIOD Error Log Entries

Error Type	Aux Data	Associated Test	Alarm Level	On/Off Board	Test to Clear Value
0[1]	0	Any	Any	Any	test trunk <grp>/<mbr>
1(a)	57408				
1(a)	57487 57476 57477 57485				
15(b)	Any	Port Audit and Update Test (#36)			
18(c)	0	busyout trunk <grp>/<mbr>	WARNING	OFF	release trunk <grp>/<mbr>
130(d)		None	WARNING	ON	test trunk <grp>/<mbr>
257(e)	57392	DS1 CO Dial Tone Seizure Test (#314)	MIN/MAJ[2]	OFF	
513(f)	57393	DS1 Tie Trunk Seizure Test (#136)	MIN/MAJ[2]	OFF	
769(g)	57484				
1025(h)	51200				
1025		DS1 CO Dial Tone Seizure Test (#314)	MIN/ WRN[3]	OFF	test trunk <grp>/<mbr> r 2
1281		Conference Circuit Test (#7)	MIN/ WRN[3]	ON	test trunk <grp>/<mbr> l r 4
1537		NPE Crosstalk Test (#6)	MIN/ WRN[3]	ON	test trunk <grp>/<mbr> l r 3
1793(i)					test board PCSS l

Continued on next page

Table 3-124. DS1 DIOD Error Log Entries — *Continued*

Error Type	Aux Data	Associated Test	Alarm Level	On/Off Board	Test to Clear Value
2049(j)	57473 57474 57475				
2305(k)	50944				
2562(l)	16665				
2817(m)	52992				
3840(n)		Port Audit and Update Test (#36)			

1. Run the Short Test Sequence first. If all tests pass, run the Long Test Sequence. Refer to the appropriate test description and follow the recommended procedures.
2. This alarm will only be raised when the System-Parameter Country form has the Base Tone Generator field set to 4 (Italy). This alarm will be a MINOR alarm unless 75% or more trunks in this trunk group are out of service, then the alarm will be upgraded to a MAJOR alarm.
3. Major alarms on this MO may be downgraded to Warning alarms based on the value used in the set options command.

Notes:

a. Error Type 1—Aux Data 57408—No tip ground is detected on an outgoing call.

Aux Data 57476—Rotary Dial before Wink.

Aux Data 57477—Rotary Dial pulse too early.

Aux Data 57485—Wink too short for a valid signal.

Aux Data 57487—PBX could not get ‘‘loop close’’ signal

The DS1 Interface circuit pack detected a hardware fault. These errors will cause the Dial Tone Test (#314) to run and are only considered a problem if the Dial Tone Test fails (in which case Error Type 1025 will also show up). In this case, the trunk may be put in the ready-for-service state (shown as ‘‘disconnected’’ by the status command), which allows only incoming calls. Run the Dial Tone Test (#314) and follow the procedures.

b. Error Type 15—This is a software audit error that does not indicate any hardware malfunction. Run Short Test Sequence and investigate associated errors (if any).

c. Error Type 18—System Technician has busied out the trunk to the out-of-service state. No calls can be made on this trunk except the Facility Access Test Call. For details on this feature, refer to "Facility Test Calls" section in Chapter 5, "Routine Maintenance Procedures".

d. Error Type 130—This error type indicates that the circuit pack has been removed or has been insane for more than 11 minutes. To clear the error, reinsert or replace the circuit pack.

e. Error Type 257—The DS1 Interface circuit pack detects a hardware fault. Aux Data 57392 indicates no external release on PBX disconnect.

f. Error Type 513—The DS1 Interface circuit pack detects a hardware fault. Aux Data 57393 indicates belated external release on PBX disconnect.

g. Error Type 769—The DS1 Interface circuit pack detects a hardware fault. The Aux Data field contains the following error type:—57484, fault is detected on tip/ring.

h. The DS1Interface circuit pack detects a hardware fault, and the Aux Data field contains the following error type: 51200, port is unavailable. Run the Dial Tone Test (#314) and follow procedures.

i. Error Type 1793—DS1 Interface circuit pack is out-of-service. Look for UDS1-BD errors in the Hardware Error Log if the port is on a TN464 UDS1 board. Refer to the UDS1-BD (DS1 Trunk Circuit Pack) Maintenance documentation for details

j. Error Type 2049—With the following Aux Data:

   Aux Data 57473—Rotary dial rate below 8 pulses per second.

   Aux Data 57474—Rotary dial rate above 12 pulses per second.

   Aux Data 57475—Rotary Dial interdigit time is too short.

   The DS1 interface circuit pack detects a hardware error on the DS1 DIOD trunk. The trunk can not communicate with the far-end because it is unable to interpret digits sent from the far-end switch. Check with the far-end switch or Operating Company for proper trunk connection.

k. Error Type 2305—Recorder message, trunk could not be seized (Aux Data 50944). Run Test #314 and follow the outlined procedures.

l. Error Type 2562—Retry Failure error. This error is logged only. It is not a hardware failure and hence does not start any testing or generate any alarms. This error comes from call processing and is generated when a second attempt (retry) to seize an outgoing trunk fails.

m. Error Type 2817—Glare error. This error is logged only. It is not a hardware failure and hence does not start any testing or generate any alarms. This error is the result of a simultaneous seizure of a two-way trunk from both the near-end and the far-end. Attempt to place the call again. If the error persists, execute the Dial Tone Seizure Test (#314) and follow those procedures.

n. Error Type 3840—Port Audit and Update Test (#36) failed due to an internal system error. Enter the **status trunk** command to verify the status of the trunk. If the trunk is out-of-service, then enter the **release trunk** command to put it back into in-service. Retry the test command.

System Technician-Demanded Tests: Descriptions and Error Codes

Always investigate tests in the order they are presented in the table below when inspecting errors in the system. By clearing error codes associated with the *NPE Crosstalk Test,* for example, you may also clear errors generated from other tests in the testing sequence.

Order of Investigation	Short Test Sequence	Long Test Sequence	D/ND[1]
NPE Crosstalk Test (#6)		X	ND
Conference Circuit Test (#7)		X	ND
DS1 Dial Tone Test (#314)	X	X	ND
Port Audit and Update Test (#36)	X	X	ND

1. D = Destructive; ND = Nondestructive

NPE Crosstalk Test (#6)

One or more Network Processing Elements (NPEs) resides on each circuit pack with a TDM Bus interface. (The TN464 UDS1 circuit pack has one SCOTCH-NPE chip instead of several NPE chips.) The NPE controls port connectivity and gain, and provides conferencing functions on a per-port basis. The NPE Crosstalk Test verifies that this port's NPE channel talks on the selected time slot and never crosses over to time slots reserved for other connections. If the NPE is not working correctly, one-way and noisy connections may be observed. This test is usually only part of a port's Long Test Sequence and takes about 20 to 30 seconds to complete.

Table 3-125. TEST #6 NPE Crosstalk Test

Error Code	Test Result	Description/ Recommendation
	ABORT	System resources required for this test are not available. 1. Retry the command at 1-minute intervals a maximum of 5 times.
1000	ABORT	System resources required to run this test are not available. The port may be in use on a valid call. Use the **status station** or **status trunk** command to determine when the port is available for testing. 1. Retry the command at 1-minute intervals a maximum of 5 times.

Continued on next page

Table 3-125. TEST #6 NPE Crosstalk Test — *Continued*

Error Code	Test Result	Description/ Recommendation
1001	ABORT	System resources required for this test are not available. 1. Retry the command at 1-minute intervals a maximum of 5 times.
1002	ABORT	The system could not allocate time slots for the test. The system may be under heavy traffic conditions or it may have time slots out-of-service due to TDM-BUS errors. The **status health** command can be used to determine if the system is experiencing heavy traffic. Refer to the TDM-BUS (TDM Bus) Maintenance documentation to diagnose any active TDM-BUS errors. 1. If system has no TDM-BUS errors and is not handling heavy traffic, repeat test at 1-minute intervals a maximum of 5 times.
1003	ABORT	The system could not allocate a tone receiver for the test. The system may be oversized for the number of Tone Detectors present or some tone detectors may be out-of-service. The **list measurements tone-receiver** command will display information on the system's tone receivers. 1. Look for TTR-LEV errors in the Error Log. If present, refer to TTR-LEV (TTR Level) Maintenance documentation. 2. Look for TONE-PT errors in the Error Log. If present, refer to TONE-PT (Tone Generator) Maintenance documentation. 3. If neither condition exists, retry the test at 1-minute intervals a maximum of 5 times.
1004	ABORT	The port has been seized by a user for a valid call. Use the **status trunk** command to determine when the port is available for testing. 1. Retry the command at 1-minute intervals a maximum of 5 times.
1020	ABORT	The test did not run due to a previously existing error on the specific port or a more general circuit pack error. 1. Examine Error Log for existing errors against this port or the circuit pack and attempt to diagnose the already existing error.
2000	ABORT	Response to the test request was not received within the allowable time period.
2100	ABORT	System resources required for this test are not available. 1. Retry the command at 1-minute intervals a maximum of 5 times.

Continued on next page

Table 3-125. TEST #6 NPE Crosstalk Test — *Continued*

Error Code	Test Result	Description/ Recommendation
2053	ABORT	At least one of the following errors is found on the DS1 circuit pack: 1281—Loss of signal 1793—Blue Alarm 2049—Red Alarm 2305—Yellow Alarm 1537—Hyperactivity Look for the above error types in the Hardware Error Log and follow the procedures given in the appropriate DS1-BD or UDS1-BD maintenance documentation for the listed error types.
	FAIL	The NPE of the tested port was found to be transmitting in error. This will cause noisy and unreliable connections. 1. Replace the circuit pack.
	PASS	The port is correctly using its allocated time slots. User-reported troubles on this port should be investigated using other port tests and examining station, trunk, or external wiring.

Conference Circuit Test (#7)

One or more Network Processing Elements (NPEs) reside on each circuit pack with a TDM Bus interface. (The TN464 UDS1 circuit pack has one SCOTCH-NPE chip instead of several NPE chips). The NPE controls port connectivity and gain, and provides conferencing functions on a per-port basis. The Conference Circuit Test verifies that the NPE channel for the port being tested can correctly perform the conferencing function. The NPE is instructed to listen to several different tones and conference the tones together. The resulting signal is then measured by a tone detector port. If the level of the tone is within a certain range, the test passes.

Table 3-126. TEST #7 Conference Circuit Test

Error Code	Test Result	Description/ Recommendation
	ABORT	System resources required for this test are not available. 1. Retry the command at 1-minute intervals a maximum of 5 times.
1000	ABORT	System resources required to run this test are not available. The port may be in use on a valid call. Use the **status station** or **status trunk** command to determine when the port is available for testing.
1004	ABORT	The port has been seized by a user for a valid call. Use the **status station** or **status trunk** command to determine when the port is available for testing. 1. Retry the command at 1-minute intervals a maximum of 5 times.
1018	ABORT	Test disabled via administration. This only applies to analog stations. 1. To enable test, set the Test field on the station administration screen for the particular analog station being tested to ‘‘y.’’ Use the **change station extension** command.
1020	ABORT	The test did not run due to a previously existing error on the specific port or a more general circuit pack error. 1. Examine Error Log for existing errors against this port or the circuit pack and attempt to diagnose the previously existing error.
2000	ABORT	Response to the test request was not received within the allowable time period.
2100	ABORT	System resources required for this test are not available. 1. Retry the command at 1-minute intervals a maximum of 5 times.
2053	ABORT	At least one of the following errors is found on the DS1 circuit pack: 1281—Loss of signal 1793—Blue Alarm 2049—Red Alarm 2305—Yellow Alarm 1537—Hyperactivity Look for the above error types in the Hardware Error Log and follow the procedures given in the appropriate DS1-BD or UDS1-BD maintenance documentation for the listed error types.
	FAIL	The NPE of the tested port did not conference the tones correctly. This will cause noisy and unreliable connections. 1. Replace the circuit pack.
	PASS	The port can correctly conference multiple connections. User-reported troubles on this port should be investigated by using other port tests and by examining station, trunk, or external wiring.

Port Audit and Update Test (#36)

This test sends port level translation data from switch processor to the DS1 Interface circuit pack to assure that the trunk's translation is correct. Translation updates include the following data: trunk type (in/out), dial type, timing parameters, and signaling bits enabled. The port audit operation verifies the consistency of the current state of trunk kept in the DS1 Interface circuit pack and in the switch software.

Table 3-127. TEST #36 Port Audit and Update Test

Error Code	Test Result	Description/ Recommendation
	ABORT	Internal system error 1. Retry the command at 1-minute intervals a maximum of 5 times.
2000	ABORT	Response to the test request was not received within the allowable time period.
2100	ABORT	Could not allocate the necessary system resources to run this test. 1. Retry the command at 1-minute intervals a maximum of 5 times.
	FAIL	Test failed due to internal system error. 1. Retry the command at 1-minute intervals a maximum of 5 times.
	PASS	Trunk translation has been updated successfully. The current trunk states kept in the DS1 Interface circuit pack and switch software are consistent. If the trunk is busied out, the test will not run but will return PASS. To verify that the trunk is in-service: 1. Enter the **status trunk** command to verify that the trunk is in-service. If the trunk is in-service, no further action is necessary. If the trunk is out-of-service, continue to step 2. 2. Enter the **release trunk** command to put the trunk back into in-service. 3. Retry the test command.

DS1 CO Dial Tone Seizure Test (#314)

DS1 CO Dial Tone Seizure Test checks the trunk's signaling capability provided by the DS1 Interface circuit pack. The maintenance software initiates the test by sending a ''seizure'' message to the DS1 Interface circuit pack and expects an ''active'' reply from the DS1 interface circuit pack. If the ''active'' message is received, then the test passes. If no message is received and the timer expires, the test is aborted. If the DS1 Interface circuit pack sends a ''reorder'' message back to maintenance software, then the test fails.

This test cannot be run on a trunk in any of the following conditions:

- The trunk direction is administered as an incoming only trunk.
- The trunk has been seized by a normal trunk call.
- The trunk is administered with maintenance test disabled.

Table 3-128. TEST #314 DS1 CO Dial Tone Seizure Test

Error Code	Test Result	Description/ Recommendation
	ABORT	Internal system error 1. Retry the command at 1-minute intervals a maximum of 5 times.
1000	ABORT	System resources required to run this test are not available. The port may be in use on a valid call. Use the **status trunk** command to determine when the port is available for testing.
1004	ABORT	The port has been seized by a user for a valid call. Use the **status trunk** command to determine when the port is available for testing. 1. Retry the command at 1-minute intervals a maximum of 5 times.
1005	ABORT	Test failed due to incompatible configuration administered in trunk group form. 1. Look at the trunk group administration form and see whether the trunk is incoming only, port 24 on a DS1 Interface with common control channel signaling, or an automatic CO type such as FX. Under any of these conditions this is a normal abort.
1018	ABORT	Test has been disabled via administration. 1. Verify that the `Maintenance Tests` field on the Trunk Group Form is set to **n**. To enable the test, issue the **change trunk-group x** command where "x" equals the number of the trunk group to be tested. Then change the entry in the `Maintenance Tests` field on the form to **y**. 2. Repeat the test.
1020	ABORT	The DS1 Interface circuit pack is out-of-service. 1. Look for UDS1-BD errors in the Hardware Error Log. If present, refer to the UDS1-BD (DS1/UDS1 Trunk Circuit Pack) Maintenance documentation. 2. Retry the command.
2000	ABORT	Response to the test request was not received within the allowable time period.
2100	ABORT	Could not allocate the necessary system resources to run this test. 1. Retry the command at 1-minute intervals for a maximum of 5 times.

Continued on next page

Table 3-128. TEST #314 DS1 CO Dial Tone Seizure Test — *Continued*

Error Code	Test Result	Description/ Recommendation
2053	ABORT	At least one of the following errors is found on the DS1 circuit pack: 1281—Loss of signal 1793—Blue Alarm 2049—Red Alarm 2305—Yellow Alarm 1537—Hyperactivity Look for the above error types in the Hardware Error Log and follow the procedures given in the appropriate DS1-BD or UDS1-BD maintenance documentation for the listed error types.
	FAIL	The trunk cannot be seized for an outgoing call. 1. Verify that the Trunk Type field on the trunk administration screen form matches the trunk type administered on far end switch. 2. Look for UDS1-BD errors in Hardware Error Log. If present, refer to the UDS1-BD (DS1/UDS1 Trunk Circuit Pack) Maintenance documentation. 3. Retry the test at 1-minute intervals for a maximum of 5 times.
	PASS	The trunk can be seized for an outgoing call.

DIOD-TRK (DIOD Trunk), DIOD-BD (DIOD Circuit Pack)

MO Name (in Alarm Log)	Alarm Level	Initial Command to Run[1]	Full Name of MO
DIOD-BD[2]	MINOR	test port PCSS s	DIOD Circuit Pack

1. Where P is the port network number (1 for PPN); C is the carrier designation (for example, A, B, or C); and SS is the address of the slot in the carrier where the circuit pack is located (for example, 01, 02, ...etc.)
2. Where **l** is long, **s** is short, and **r** is repeat. Refer to the XXX-BD (Common Port Board) Maintenance documentation.

DIOD-TRK (DIOD Trunk)

MO Name (in Alarm Log)	Alarm Level	Initial Command to Run[1]	Full Name of MO
DIOD-TRK	MAJOR[2]	test port PCSSpp l	DIOD Trunk
DIOD-TRK	MINOR	test port PCSSpp l	DIOD Trunk
DIOD-TRK	WARNING	test port PCSSpp l	DIOD Trunk

1. Where P is the port network number (1 for PPN); C is the carrier designation (for example, A, B, or C); and SS is the address of the slot in the carrier where the circuit pack is located (for example, 01, 02, ...etc.).
2. A MAJOR alarm on a trunk indicates that alarms on these trunks are not downgraded by the **set options** command and that at least 75 percent of the trunks in this trunk group are alarmed.

Direct Inward and Outward Dial (TN429 DIOD) trunks are 2-wire analog lines to the CO which support the following services:

- both incoming and outgoing CO calls
- DID trunk
- DID Trunk and 1-way Outgoing DIOD

The DIOD Trunk circuit pack provides eight ports for loop-start CO. The circuit pack is an interface between the 2-wire analog line from the CO and the system's (4-wire) TDM Bus.

Loop start operation

Idle State - Tip = ground, Ring = CO Battery

A. Outgoing Call

1. PBX Off-Hook (Seize Message): Closes the Tip-Ring Loop
   a. CO Response: DC loop current + Dial tone
2. PBX On-Hook (Drop Message): Open Tip-Ring loop, no loop current
   a. CO Response: CO goes to idle state (see Note)

B. Incoming Call

1. CO Applies Ringing Voltage
   a. PBX Response: Detect ringing current
2. PBX Off-Hook (Answer Message): Close loop
   a. CO Response: Trip ringing, provide loop current

3. PBX On-Hook (Drop Message): Open Tip-Ring loop, no loop current
    a. CO Response: CO goes to idle state (see Note)

C. Direct Inward Dialing (DID)

1. CO Applies Ringing Voltage
    a. PBX Response: Detect ringing current and close loop
    b. CO Response: Send DTMF digits
    c. PBX Response: Acknowledge of Number dialed and open loop
2. PBX Off-Hook (Answer Message): Close loop
    a. CO Response: Trip ringing, provide loop current
3. PBX On-Hook (Drop Message): Open Tip-Ring loop, no loop current
    a. CO Response: CO goes to idle state (see Note)

NOTE:
CO does not normally provide an On-Hook (Disconnect) signal.

Hardware Error Log Entries and Test to Clear Values

Table 3-129. DIOD Trunk Error Log Entries

Error Type	Aux Data	Associated Test	Alarm Level	On/Off Board	Test to Clear Value
0[1]	0	Any	Any	Any	test port PCSSpp sh r 1
15 (b)	any	Port Audit Update Test (#36)			
18	0	busyout trunk <grp>/<mbr>			
769 (a)	57392	None	MAJ/MIN/ WRN[2]	ON	
1537		Dial Tone Test (#0)	MAJ/MIN/ WRN[2]	ON	test port PCSS l r 2
1793		Loop Around and Conference Test (#33)	MAJ/MIN/ WRN[2]	ON	test port PCSS l r 3
2049		NPE Cross Talk Test (#6)	MAJ/MIN/ WRN[2]	ON	test port PCSS l r 3
2561 (a,d)	57345	None			
2817 (a,e)	57393	None			

Continued on next page

Table 3-129. DIOD Trunk Error Log Entries — *Continued*

Error Type	Aux Data	Associated Test	Alarm Level	On/Off Board	Test to Clear Value
3073 (a,c)	57376	None			
3073 (a,c)	57424	None			
3585 (a,c)	57424	None			

1. Run the Short Test Sequence first. If all tests pass, run the Long Test Sequence. Refer to the appropriate test description and follow the recommended procedures.
2. Minor alarms on this MO may be downgraded to warning alarms based on the values used in the **set options** command. If the Minor alarm is not downgraded by the **set-options** values, the Minor alarm is upgraded to a Major alarm if 75 percent of the trunks in this trunk group are alarmed.

Notes:

a. These are in-line errors that have no specific test associated with them. Refer to the following table for an explanation and appropriate action.

b. This is a software audit error that does not indicate any hardware malfunction. Run the Short Test Sequence and investigate associated errors (if any).

c. Aux data 57376 - No loop current on incoming call

Aux data 57424 - No loop current on outgoing call

These errors cause the Dial Tone Test (#0) to run and are only considered a problem if the Dial Tone Test fails (in which case Error Type 1537 also shows up). In this case, the trunk may be put in "Ready-for-Service" state (shown as "disconnected" by status command), which allows only incoming calls. Run the Dial Tone Test (#0) and follow its outlined procedures.

d. Single polarity ringing current - This error results from abnormal ringing current, but does not prevent the incoming call from being accepted. This error code is only logged as an informational event and causes no other testing to occur.

e. Late CO Trunk release - This error indicates that the CO releases the trunk at least four minutes after the PBX dropped the call. This error code is only logged as an informational event and causes no other testing to occur.

Table 3-130. DIOD Trunk Errors with NO Tests

Error Type	Aux Data	Description and System Action	System Technician Action
769	57392	CO not releasing after call is dropped from PBX end (TN747B), or the loop is not open after a disconnect (TN765). After several occurrences, an off-board (TN747B) or on-board (TN465) warning alarm is generated.	Refer problem to CO.
2561	57345	Single polarity ringing current. This error results from abnormal ringing current, but does not prevent the incoming call from being accepted. One cause could be that the reverse current detector associated with the port is failing. (Will not be detected by any tests.) The other cause could be that normal current is not detected. In this case, neither incoming nor outgoing calls can be completed, and the dial tone test also fails.	Check for other errors.
2817	57393	CO released the trunk at least four minutes after the PBX dropped the call. This error code is log only and causes no other testing to occur. No alarm is generated.	Check for other errors.
3073	57376	No loop current on incoming call. The incoming destination has already answered and no loop current has been detected. If this is a hard fault, the dial tone test and all outgoing calls should also fail.	Check for other errors.
3585	57424	No loop current on outgoing call. This error occurs on attempt to seize a loop or ground-start trunk for an outgoing call. An error occurs if loop current is not detected or the caller hangs up before it is detected.	See Note at end of table.

NOTE:
At the administration terminal, busyout the affected port, and run a Long test. If Dial Tone Test #0 passes, ignore this error. Release the port.

System Technician-Demanded Tests: Descriptions and Error Codes

Always investigate tests in the order they are presented in the table below when inspecting errors in the system. By clearing error codes associated with the *NPE Crosstalk Test,* for example, you may also clear errors generated from other tests in the testing sequence.

For example, you may also clear errors generated from other tests in the testing sequence.

Order of Investigation	Short Test Sequence	Long Test Sequence	D/ND[1]
NPE Crosstalk Test (#6)		X	ND
Dial Tone Test (#0)		X	ND
Loop Around and Conference Test (#33)		X	ND
Audit Update Test (#36)	X	X	ND

1. D = Destructive; ND = Nondestructive

Dial Tone Test (#0)

This test attempts to seize a port and checks for the return of a dial tone.

Table 3-131. TEST #0 Dial Tone Test

Error Code	Test Result	Description/ Recommendation
	ABORT	Could not allocate system resources to run this test. 1. Retry the command at 1-minute intervals a maximum of 5 times.
1000	ABORT	System resources required to run this test are not available. The port may be busy with a valid call. Use the command **display port PCSSpp** to determine the trunk group/member number of the port. Use the **status trunk** command to determine the service state of the port. If the service state indicates that the port is in use, then the port is unavailable for certain tests. You must wait until the port is idle before retesting. 1. If the port status is idle, then retry the command at 1-minute intervals a maximum of 5 times.
1001	ABORT	Could not allocate the necessary system resources to run this test. 1. Retry the command at 1-minute intervals a maximum of 5 times.
1002	ABORT	The system could not allocate time slots for the test. The system may be under heavy traffic conditions or it may have time slots out-of-service due to TDM-BUS errors. Refer to TDM-BUS (TDM Bus) Maintenance documentation to diagnose any active TDM-BUS errors. 1. If the system has no TDM-BUS errors and is not handling heavy traffic, repeat test at 1-minute intervals a maximum of 5 times.
1004	ABORT	The port has been seized by a user for a valid call. Use the **status trunk** command to determine when the port is available for testing. 1. Retry the command at one minute intervals a maximum of 5 times.

Continued on next page

Table 3-131. TEST #0 Dial Tone Test — *Continued*

Error Code	Test Result	Description/ Recommendation
1018	ABORT	Test has been disabled via administration. 1. Verify that the `Maintenance Tests?` field on the Trunk Group Form is set to **n**. To enable the test, issue the **change trunk-group x** command where "x" equals the number of the trunk group to be tested. Then change the entry in the `Maintenance Tests?` field on the form to **y**.
1005	ABORT	Trunk has been administered as incoming-only; or DID trunk group type; dial tone can only be obtained on outgoing trunks. This is a normal condition.
2000	ABORT	Response to the test was not received within the allowable time period. 1. Retry the command at 1-minute intervals a maximum of 5 times.
	FAIL	Trunk was seized, but dial tone could not be detected. 1. Check for errors on TONE-BD or TONE-PT. Clear any errors found and repeat test. 2. If error has still not cleared, refer problem to CO.
2002	FAIL	Seizure portion of test failed due to hardware problem. Fault is usually caused by a disconnected trunk. 1. Check trunk wiring to ensure good connection; repeat test if wiring correction made. 2. Locate another identical CO trunk and swap its wiring with one under test. Repeat test on both trunks and determine if problem follows trunk or remains at original port. If problem follows trunk, refer problem to CO. If problem remains at port, replace circuit pack and repeat test.
1009	PASS	Detected tone was not pure dial tone. No action required.
	PASS	Trunk was seized, and dial tone was detected. User-reported troubles on this port should be investigated by using other port tests and by examining trunk or external wiring.

NPE Crosstalk Test (#6)

One or more NPEs reside on each circuit pack with a TDM Bus interface. The NPE controls port connectivity and gain, and provides conferencing functions on a per port basis. The NPE Crosstalk Test verifies that this port's NPE channel talks on the selected time slot and never crosses over to time slots reserved for other connections. If the NPE is not working correctly, one way and noisy connections may be observed. This test is usually only part of a port's long test sequence and takes approximately 20 to 30 seconds to complete.

Table 3-132. TEST #6 NPE Crosstalk Test

Error Code	Test Result	Description/ Recommendation
	ABORT	Could not allocate the necessary system resources to run this test. 1. Retry the command at 1-minute intervals a maximum of 5 times.
1000	ABORT	System resources required to run this test are not available. The port may be busy with a valid call. Use the **display port PCSSpp** command to determine the trunk group/member number of the port. Use the **status trunk** command to determine the service state of the port. If the service state indicates that the port is in use, then the port is unavailable for certain tests. You must wait until the port is idle before retesting. 1. If the port status is idle, then retry the command at 1-minute intervals a maximum of 5 times.
1001	ABORT	Could not allocate the necessary system resources to run this test. 1. Retry the command at 1-minute intervals a maximum of 5 times.
1002	ABORT	The system could not allocate time slots for the test. The system may be under heavy traffic conditions or it may have time slots out-of-service due to TDM-BUS errors. Refer to TDM-BUS (TDM-Bus) Maintenance documentation to diagnose any active TDM-BUS errors. 1. If system has no TDM-BUS errors and is not handling heavy traffic, repeat test at 1-minute intervals a maximum of 5 times.
1003	ABORT	The system could not allocate a tone receiver for the test. The system may be oversized for the number of tone detectors present or some tone detectors may be out-of-service. 1. Look for TTR-LEV errors in the Error Log. If present, refer to TTR-LEV Maintenance documentation. 2. Look for TONE-PT errors in the Error Log. If present, refer to TONE-PT Maintenance documentation. 3. If neither condition exists, retry the test at 1-minute intervals a maximum of 5 times.
1004	ABORT	The port was seized by a valid call during the test. The test has been aborted. Use the **display port PCSSpp** command to determine the trunk group/member number of the port. Use the **status trunk** command to determine the service state of the port. If the service state indicates that the port is in use, then the port is unavailable for certain tests. You must wait until the port is idle before retesting.
2000	ABORT	Response to the test request was not received within the allowable time period.
2100	ABORT	Could not allocate the necessary system resources to run this test. 1. Retry the command at 1-minute intervals a maximum of 5 times.

Continued on next page

Table 3-132. TEST #6 NPE Crosstalk Test — *Continued*

Error Code	Test Result	Description/ Recommendation
Any	FAIL	The NPE of the tested port was found to be transmitting in error. This causes noisy and unreliable connections. 1. Replace the circuit pack.
	PASS	The port is correctly using its allocated time slots. User-reported troubles on this port should be investigated by using other port tests and by examining trunk or external wiring.

Loop Around and Conference Circuit Test (#33)

This test checks the reflective loop and conference abilities of a CO port circuit. The test uses 404 Hz, 1004 Hz, and 2804 Hz tones. Each tone is transmitted separately through the loop and checked.

Table 3-133. TEST #33 Loop Around and Conference Circuit Test

Error Code	Test Result	Description/ Recommendation
	ABORT	Could not allocate system resources to run this test.
7	ABORT	Conference Circuit Test aborted.
1000	ABORT	System resources required to run this test are not available. The port may be busy with a valid call. Use the **display port PCSSpp** command to determine the trunk group/member number of the port. Use the **status trunk** command to determine the service state of the port. If the service state indicates that the port is in use, then the port is unavailable for certain tests. You must wait until the port is idle before retesting. 1. If the port status is idle, then retry the command at 1-minute intervals a maximum of 5 times.
1004	ABORT	The port has been seized by a user for a valid call. Use the **status trunk** command to determine when the port is available for testing. 1. Retry the command at 1-minute intervals a maximum of 5 times.
2100	ABORT	Could not allocate the necessary system resources to run this test. 1. Retry the command at 1-minute intervals a maximum of 5 times.

Continued on next page

Table 3-133. TEST #33 Loop Around and Conference Circuit Test — *Continued*

Error Code	Test Result	Description/ Recommendation
7	FAIL	1. Check for errors on TONE-BD or TONE-PT. If there are errors, take the appropriate actions. 2. If the Reflective Loop Around Test fails for all ports on a circuit pack, a -5 volt power problem is indicated. 3. Rerun the test. 4. If the test fails again, replace the circuit pack.
	PASS	CO Trunk Loop Around and Conference Test is successful. User-reported troubles on this port should be investigated by using other port tests and by examining trunk or external wiring.

Port Audit Update Test (#36)

This test sends updates of the CO port translation for all ports on the circuit pack which have been translated. The update is non-disruptive and guards against possible corruption of translation data contained on the circuit pack. No response message is expected from the circuit pack once it receives translation updates. The port translation data includes: ground or loop start trunk, tone or rotary dialing trunk, rotary dialing inter-digit timing, network balance R/RC, and disconnect timing.

Table 3-134. TEST #36 Port Audit Update Test

Error Code	Test Result	Description/ Recommendation
	ABORT	Could not allocate the necessary system resources to run this test. 1. Retry the command at 1-minute intervals a maximum of 5 times.

Continued on next page

Table 3-134. TEST #36 Port Audit Update Test — *Continued*

Error Code	Test Result	Description/ Recommendation
2100	ABORT	Could not allocate the necessary system resources to run the test.
	FAIL	Internal system error 1. Retry the command at 1-minute intervals a maximum of 5 times.
	PASS	This test passed. Translation information was successfully updated on the circuit pack. User-reported troubles on this port should be investigated by using other port tests and by examining trunk or external wiring. If the trunk is busied out, the test does not run, but returns PASS. To verify that the trunk is in-service: 1. Enter **status-command** to verify that the trunk is in-service. If the trunk is in-service, no further action is necessary. If the trunk is out-of-service, continue to Step 2. 2. Enter **release-trunk** command to put trunk back into in-service. 3. Retry the test command.

DLY-MTCE (MO-DAILY)

MO Name (in Alarm Log)	Alarm Level	Initial Command to Run	Full Name of MO
DLY-MTCE	MINOR	NONE	DLY-MTCE
DLY-MTCE	MAJOR	NONE	DLY-MTCE

The DLY-MTCE maintenance object monitors daily translation saves. If a translation save times out or fails to run, an error is logged against this maintenance object. If the save fails three times in a row, a MINOR alarm is raised; if the save fails for seven consecutive attempts, a MAJOR alarm is raised.

DS1-BD (DS1 Interface Circuit Pack)

MO Name (in Alarm Log)	Alarm Level	Initial Command to Run[1]	Full Name of MO
DS1-BD	MAJOR	test board PCSS sh	DS1 Interface Circuit Pack
DS1-BD	MINOR	test board PCSS l	DS1 Interface Circuit Pack
DS1-BD	WARNING	test board PCSS sh	DS1 Interface Circuit Pack

1. P is the universal cabinet number (1 for PPN). C is the carrier designation (A, B, or C). SS is the number of the slot in which the circuit pack resides (01 to 21).

The DS1 Interface circuit pack provides an interface to an external DS1 facility and supports 24 DS0 channels carried on a 1.544 Mbps DS1 link. These DS0 channels can be administered as either trunks to other switches or lines to off-premises stations. The TN464C and later suffix Universal DS1 Interface also supports a 32-channel interface on a 2.048Mbps link. The functions and maintenance strategy for the TN464 circuit packs are covered under a separate maintenance object, UDS1-BD.

DS1-BD maintenance logs in-line errors reported by the DS1 Interface circuit pack, runs tests for error diagnosis and recovery, and raises and clears alarms. The following table shows the capabilities of each DS1 circuit pack.

Circuit Pack Code	24 Channel	32 Channel	Tie Trunk Signaling	CO Trunk Signaling	DID Trunk Signaling	OPS Line Signaling
TN767/B/C/D/E	x		x	x	x	x
TN464C/D/E/F	x	x	x	x	x	x (24-chl only)

ISDN-PRI Trunk signaling (for example, Q.921, Q.931) requires a TN464D and is handled by system software. The TN464 is covered in the "UDS1-BD (UDS1 Interface Circuit Pack)" section of Chapter 9.

Each trunk and line have their own maintenance strategies. However, they all depend on the health of the DS1 Interface circuit pack. Refer to the following sections for details: TIE-DS1, CO-DS1, DID-DS1, OPS-LINE, ISDN-TRK, and ISDN-PLK. Signaling over the DS1 link must be synchronized between the transmitting and receiving ends to ensure error-free communication. Refer to "SYNC (Synchronization)" for details.

The TN767E circuit pack combined with a 120A2 CSU Module forms an Enhanced Integrated CSU. The 120A2, when combined with the functionality provided by the TN767E hardware and firmware, and switch software, provides

functionality equivalent to an external stand-alone ESF T1 CSU. The 120A2 CSU Module connects to the TN767E circuit pack on the I/O connector panel on the back of the port carrier. The new CSU Module, thus becomes an integrated part of the DEFINITY. system. Throughout the document, the term 120A will mean a 120A2 or later suffix CSU Module.

The Enhanced Integrated CSU is for use in the United States of America with 1.544 Mbps DS1 service. For further details on the 120A CSU Module see *DEFINITY. Communications System Generic 1, Generic 2, and Generic 3 V1 and V2 - Integrated CSU Module Installation and Operation, 555-230-193.*

The TN767E and 120A CSU Module support on-demand loopback tests that assist in the detection of faults between the TN767E circuit pack and the CSU Module, between the Integrated CSU and the optional Customer Premises Loopback Jack, or between the Integrated CSU and remote CSU. These loopback tests are explained in detail later in this DS1-BD section, but Figure 3-11 gives a high level overview of the loopback points.

The following list of acronym definitions are for Figure 3-11:

- PLB = Payload Loopback
- BLB = Board Loopback
- ELB = Equipment Loopback
- LLB = Line Loopback
- RLB = Repeater Loopback
- CLJ = Loopback Jack Loopback
- R-LLB = Remote Line Loopback
- SMRT = Smart Jack
- LPBK = Loopback

For more information about DS1 interfaces, see the *DEFINITY Communications System DS1/CEPT1/ISDN-PRI Reference*, 555-025-107.

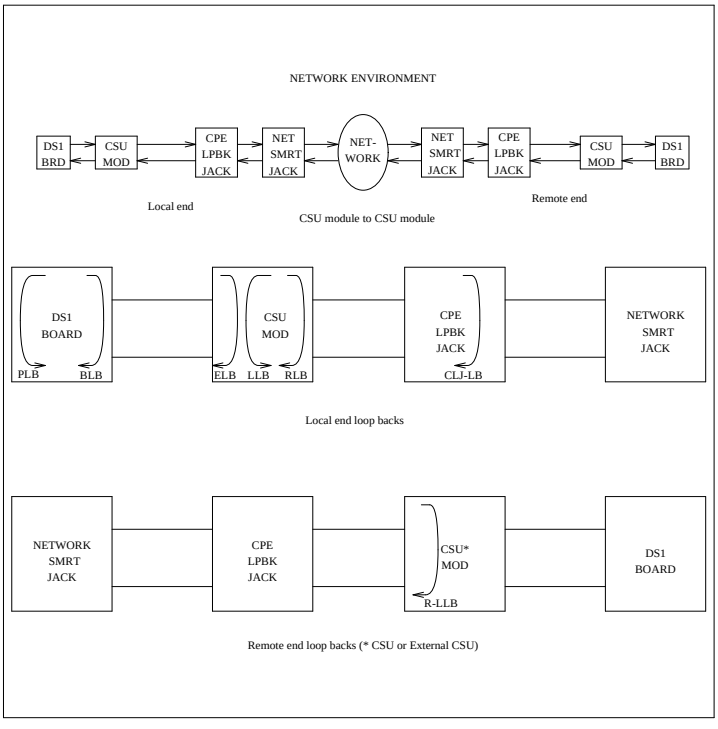

Figure 3-11. High Level Overview Of Loopback Points

Error Log Entries and Test to Clear Values

Table 3-135. DS1 Interface Circuit Pack Maintenance Error Log Entries

Error Type	Aux Data	Associated Test	Alarm Level	On/Off Board	Test to Clear Value
0[1]	0	Any	Any	Any	test board PCSS
1 (a)	0	Circuit pack removed or SAKI Test (#53)	MIN/WRN[2]	ON	
18 (b)	0	busy-out board PCSS	WARNING	OFF	release board PCSS
23 (c)	0		WARNING	OFF	add ds1 PCSS

Continued on next page

Table 3-135. DS1 Interface Circuit Pack Maintenance Error Log Entries — *Continued*

Error Type	Aux Data	Associated Test	Alarm Level	On/Off Board	Test to Clear Value
12 5(d)		None	MINOR	ON	
257	65535	Control Channel Loop Test (#52)	MINOR	ON	test board PCSS l r 20
257 (e)	Any	None			
513 (f)	Any		MINOR	ON	
769 (g)	4358				
1025 (e)	4363	NPE Audit Test (#50)			
1281	Any	Loss of Signal Alarm Inquiry Test (#138)	MIN/WRN[3]	OFF	test board PCSS
1300 (h)	Any	Loss Of Signal Alarm Inquiry Test (#138)	WARNING	OFF	test board PCSS
1301 (i)	Any	Loss Of Signal Alarm Inquiry Test (#138)	WARNING	OFF	test board PCSS
1302 (j)	Any	Loss Of Signal Alarm Inquiry Test (#138)	MIN/WRN[3]	OFF	test board PCSS
1303 (k)	Any	Loss Of Signal Alarm Inquiry Test (#138)	MIN/WRN[3]	ON	test board PCSS
1310 (l)	Any	Board Loopback Test (#1209)	MINOR	ON	test ds1-loop PCSS ds1/csu-loopback-tests
1311 (m)	Any	Equipment Loopback Test (#1210)	MIN/WRN[3]	OFF	test ds1-loop PCSS ds1/csu-loopback-test
1312 (n)	Any	Repeater Loopback Test (#1211)	MIN/WRN[3]	OFF	test ds1-loop PCSS ds1/csu-loopback-tests
1313 (o)	Any	CPE Loopback Jack Test (#1212)	MIN/WRN[3]	OFF	test ds1-loop PCSS end-loopback/span-test
1314 (p)	Any	Far CSU Loopback Test (#1213)	MIN/WRN[3]	OFF	test ds1-loop PCSS end-loopback/span-test
1320	Any	Loss of Signal Alarm Inquiry Test (#138)	MIN/WRN[3]	OFF	test board PCSS
1321	Any	Loss of Signal Alarm Inquiry Test (#138)	MIN/WRN[3]	OFF	test board PCSS
1322	Any	Loss of Signal Alarm Inquiry Test (#138)	MINOR	ON	test board PCSS
1323	Any	Loss of Signal Alarm Inquiry Test (#138)	MIN/WRN[3]	OFF	test board PCSS

Continued on next page

Table 3-135. DS1 Interface Circuit Pack Maintenance Error Log Entries — *Continued*

Error Type	Aux Data	Associated Test	Alarm Level	On/Off Board	Test to Clear Value
1324	Any	Loss of Signal Alarm Inquiry Test (#138)	WARNING	OFF	test board PCSS
1538 (q)	Any		MINOR	ON	
1793	Any	Blue Alarm Inquiry Test (#139)	MAJ/MIN/ WRN **	OFF	test board PCSS
1794	Any	Blue Alarm Inquiry Test (#139)	MAJ/MIN/ WRN **	OFF	test board PCSS
1795	Any	Blue Alarm Inquiry Test (#139)	MAJ/MIN/ WRN **	OFF	test board PCSS
2049	Any	Red Alarm Inquiry Test (#140)	MIN/WRN[3]	OFF	test board PCSS
2305	Any	Yellow Alarm Inquiry Test (#141)	MINOR	OFF	test board PCSS
2306	Any	Yellow Alarm Inquiry Test (#141)	MINOR	OFF	test board PCSS
2561	Any	Major Alarm Inquiry Test (#142)	MIN/WRN[3]	OFF	test board PCSS
2817		Minor Alarm Inquiry Test (#143)	MIN/WRN[3]	OFF	test board PCSS
3073 to 3160 (r)	Any	Slip Alarm Inquiry Test (#144)	MIN/WRN[3]	OFF	test board PCSS r 6
3329 to 3345 (s)	Any	Misframe Alarm Inquiry Test (#145)	MIN/WRN[3]	OFF	test board PCSS r 6
3840(t)	Any	None			
3900(u)	Any	CPE Loopback Jack Test (#1212)			

Continued on next page

Table 3-135. DS1 Interface Circuit Pack Maintenance Error Log Entries — *Continued*

Error Type	Aux Data	Associated Test	Alarm Level	On/Off Board	Test to Clear Value
3901(v)	Any	Far CSU Loopback Test (#1213)			
3902(w)	Any	One-Way Span Test (#1214)			
3999 (x)	Any	None			

1. Run the Short Test Sequence first. If all tests pass, run the Long Test Sequence. Refer to the appropriate test description and follow the recommended procedures.
2. If ports are assigned to the circuit pack, then a minor alarm is raised. If no ports are assigned to the circuit pack, then a warning alarm is raised. The alarm is raised after the circuit pack has been missing for 15 minutes. Warning alarms are also raised against any ports administered on the circuit pack.
3. Off-board minor alarms on this maintenance object may be downgraded to Warning alarms based on the values used in the **set options** command.

Notes:

a. This error indicates that the circuit pack has stopped functioning or is not completely administered. The alarm is logged about 15 minutes after the circuit pack has been removed or 11 minutes after the SAKI Test (#53) fails.

   To be completely administered, a DS1 circuit pack must meet all 3 of the following conditions:

   1. Have an entry in the circuit plan via the **change circuit pack** command
   2. Be administered via the **add ds1 PCSS** command
   3. Be physically inserted in the appropriate slot

   If the circuit pack has an entry in the circuit plan and either of the other two conditions are *not* met, a MINOR alarm is logged. To resolve the error either

   1. Make sure all conditions for administration are met and that a functioning DS1 circuit pack is inserted in the correct slot.
   2. Completely remove the DS1-BD from the system using the following steps:

      a. Remove any administered DS1 trunks or access endpoints associated with the circuit pack from their trunk groups.

      b. Execute the **remove ds1 PCSS** and **change circuit pack PCSS commands.**

If all the administration conditions are met for this circuit pack and the red LED is still on, follow the instructions for *LED Alarms with Error Type 1* in Chapter 7.

b. The DS1 Interface circuit pack has been busied out by a **busy-out board** PCSS command.

c. The DS1-BD circuit pack is not completely administered. A completely administered DS1-BD circuit pack should have an entry in the circuit plan via the **change circuit pack** command, should have been administered via the **add ds1 PCSS** command, and should have been inserted into the appropriate port slot.

d. The circuit pack in the slot does not match the type administered to that position. Either replace the circuit pack with one of the type administered, or use **change circuit-pack** to readminister the slot. This error may also indicate that the 24/32-channel selection on the DS1 administration form does not match the configuration of the circuit pack.

e. This error is associated with the Common Port Circuit Pack Maintenance Test. Refer to "XXX-BD (Common Port Circuit Pack)" for details.

f. The DS1 Interface circuit pack has detected a transient hardware problem (for example, external RAM failure, internal RAM failure, internal ROM failure, or instruction set failure). This error will disappear when no faults are detected for 30 minutes. The value in the Aux Data field indicates the type of hardware problem. However, when this error is reported with Aux Data in the range of 4352 to 4358, it indicates the circuit pack has reported a hardware failure such that the circuit pack should be replaced.

g. The DS1 Interface circuit pack has detected a transient hardware logic error (for example, program logic inconsistency). This error will disappear when no faults are detected for 100 minutes. The value in Aux Data field indicates the type of hardware problem.

h. CSU Module missing. The `Near-End CSU Type` field on the **add ds1** form has been administered as `integrated` but the 120A CSU Module is not physically connected (or is improperly connected) to the TN767E board on the back of the port carrier.

   If using the 120A CSU Module, plug (or replug) the CSU Module into the TN767E circuit pack's connector on the I/O connector panel on back of the carrier. Otherwise, change the `Near-End CSU Type` field using the **change ds1** form to `other`.

   If this error remains after plugging the CSU Module into the board's connector, there could be a problem with the I/O connector panel.

i. CSU Module not expected. The 120A CSU Module is physically connected to the TN767E board on the back of the port carrier but the `Near-End CSU Type` field on the **add ds1** form has not been administered as `integrated`.

If the 120A CSU Module is to be used, use the **change ds1** command to change the `Near-End CSU Type` field to `integrated`. Otherwise, physically remove the 120A CSU Module from the back of the port carrier.

j. DS1 configuration error. Attempting to use the 120A CSU Module with a TN767E circuit pack that is configured for 32-channel (2.048 Mbps) operation. The CSU Module only works with a DS1 board configured for 24-channel (1.544 Mbps) operation in the United States of America.

k. DS1 circuit pack suffix incorrect for CSU Module. The `Near-End CSU Type` field on the **add ds1** form has been administered as `integrated` but the DS1 circuit pack is not a TN767E or later suffix DS1 board.

   If the 120A CSU Module is to be used, remove the circuit pack and replace it with a TN767E or later suffix board. Otherwise, use the **change ds1** command to change the `Near-End CSU Type` field to `other`.

l. BLB failure. This error occurs when the DS1 Board Loopback (BLB) demand test fails. Repeat the test using the following commands: **busyout board PCSS**, **test ds1-loop PCSS ds1/csu-loopback-tests**, **release board PCSS**. If the BLB test continues to fail, then the TN767E circuit pack needs to be replaced.

m. ELB failure. This error occurs when the Integrated CSU (I-CSU) Module Equipment Loopback (ELB) test fails. This test is executed by the I-CSU during I-CSU power-up/reset (i.e., TN767E board physically inserted and 120A CSU Module already installed) or when the 120A CSU Module is plugged on to an already initialized DS1 board. The ELB test is also executed as part of the command **test ds1-loop PCSS ds1/csu-loopback-tests**.

   Attempt to clear the alarm via the following commands: **busyout board PCSS**, **test ds1-loop PCSS ds1/csu-loopback-tests**, and **release board PCSS**. If the ELB test continues to fail, then either the TN767E board, the CSU Module, or the I/O cable between the backplane and the CSU module (or any combination thereof) has failed. Attempt to isolate where the failure is occurring by re-executing the test by replacing one piece of hardware at a time.

n. RLB failure. This error occurs when the Integrated CSU (I-CSU) Module Repeater Loopback (RLB) test fails. This test is executed by the I-CSU during I-CSU power-up/reset (i.e., TN767E board physically inserted and 120A CSU Module already installed) or when the 120A CSU Module is plugged on to an already initialized DS1 board. The RLB test is also executed as part of the command **test ds1-loop PCSS ds1/csu-loopback-tests**.

   Attempt to clear the alarm via the following commands: **busyout board PCSS**, **test ds1-loop PCSS ds1/csu-loopback-tests**, and **release board PCSS**. If the RLB test continues to fail, then the CSU Module needs to be replaced.

o. CPE Loopback Jack deactivation error. This error occurs when the TN767E circuit pack could not deactivate a CPE Loopback Jack loopback.

   Attempt to clear the alarm via the following commands: **busyout board PCSS**, **test ds1-loop PCSS end-loopback/span-test**, and **release board PCSS**. If the attempt to deactivate the CPE Loopback Jack loopback continues to fail, other steps must be taken to deactivate the loopback.

p. Far CSU Loopback deactivation error. This error occurs when the TN767E circuit pack could not deactivate a far-end CSU loopback on power-up/reset or upon software request.

   Attempt to clear the alarm via the following commands: *busyout board PCSS*, *test ds1-loop PCSS end-loopback/span-test*, *release board PCSS*. If the attempt to deactivate the Far CSU loopback continues to fail, then escalate the problem.

q. The hyperactive circuit pack is out-of-service and may exhibit one or more of the following symptoms:

   1. The common circuit pack level tests such as Test #51 and/or Test #220 are aborting with error code 2000.
   2. The tests run on the ports of this circuit pack are returning NO BOARD.
   3. A busy-out/release of the circuit pack has no affect on test results.
   4. A **list configuration** command shows that the circuit pack and ports are properly installed.

   The circuit pack is isolated from the system and all trunks of this circuit pack are placed into the out-of-service state. The system will try to restore the circuit pack within 15 minutes. When no faults are detected for 15 minutes, the DS1 Interface circuit pack is restored to normal operation. All trunks of the DS1 Interface circuit pack are then returned to the in-service state. If the error recurs after 15 minutes, then replace the circuit pack.

r. For later releases of G3V4 and beyond, only error 3073 will show that this board is receiving Slips and the AUX data shows the last Slip count that was reported.

s. For later releases of G3V4 and beyond, only error 3329 will show that this board is receiving misframes and the AUX data shows the last misframe count that was reported.

t. This error is not service-affecting and can be ignored.

u. Error 3900 is used to give status information on a CPE Loopback Jack Test. The value in the Aux Data field indicates the status of the loopback test.

1 — Test is currently running.

2 — Test failed because loopback could not be activated.

3 — Test failed because test pattern could not be detected.

4 — Test has been terminated.

v. Error 3901 is used to give status information on a Far CSU Loopback Test. The value in the Aux Data field indicates the status of the loopback test.

1 — Test is currently running.

2 — Test failed because loopback could not be activated.

3 — Test failed because test pattern could not be detected.

4 — Test has been terminated.

w. Error 3902 is used to give status information on a One-Way Span Test. The value in the Aux Data field indicates the status of the span test.

1 — Test is currently running.

2 — Test has failed because test could not be activated.

3 — Test pattern was not received from the far end.

4 — Test has been terminated.

x. Error type 3999 indicates that the circuit pack sent a large number of control channel messages to the switch within a short period of time. If error type 1538 is also present, then the circuit pack was taken out-of-service due to hyperactivity. If error type 1538 is not present, then the circuit pack has not been taken out-of-service, but it has generated 50% of the messages necessary to be considered hyperactive. This may be completely normal during heavy traffic periods. However, if this error type is logged when the circuit pack is being lightly used, it may indicate a problem with the circuit pack or the equipment attached to it.

System Technician-Demanded Tests: Descriptions and Error Codes

Always investigate tests in the order they are presented in Table 3-136. By clearing error codes associated with the *NPE Connection Audit Test,* for example, you may also clear errors generated from other tests in the testing sequence

Table 3-136. System Technician-Demanded Tests: DS1-BD

Order of Investigation	Short Test Sequence	Long Test Sequence	Reset Board Sequence	test ds1-loop Command	D/ND[1]
NPE Connection Audit Test (#50)		X			ND
Control Channel Loop Test (#52)		X			ND
Loss of Signal Alarm Inquiry Test (#138)	X	X			ND
Blue Alarm Inquiry Test (#139)	X	X			ND
Red Alarm Inquiry Test (#140)	X	X			ND
Yellow Alarm Inquiry Test (#141)	X	X			ND
Major Alarm Inquiry Test (#142)	X	X			ND
Minor Alarm Inquiry Test (#143)	X	X			ND
Slip Alarm Inquiry Test (#144)	X	X			ND
Misframe Alarm Inquiry Test (#145)	X	X			ND
Translation Update Test (#146)	X	X			ND
ICSU Status LEDs Test (#1227)	X	X			ND
SAKI Sanity Test (#53)			X		D
Internal Looparound Test (#135)			X		D
DS1/CSU Loopback Tests				X	D
DS1 Board Loopback Test (#1209)				X	D
CSU Equipment Loopback Test (#1210)				X	D
CSU Repeater Loopback Test (#1211)				X	D
CPE Loopback Jack Test (#1212)				X	D
Far CSU Loopback Test (#1213)				X	D
One-Way Span Test (#1214)				X	D
Inject Single Bit Error (#1215)				X	D
End Loopback/Span Test (#1216)				X	D

1. D = Destructive, ND = Non-destructive

NPE Connection Audit Test (#50):

The system sends a message to the on-board microprocessor to update the network connectivity translation for all the Network Processing Elements (NPEs) on the circuit pack.

Table 3-137. TEST #50 NPE Connection Audit Test

Error Code	Test Result	Description/ Recommendation
None 2100	ABORT	System resources required for this test are not available.
1019	ABORT	Test already in progress.
	FAIL	Internal system error 1. Retry the command at 1-minute intervals a maximum of 5 times.
	PASS	The circuit pack's NPEs have been updated with their translation.
0	NO BOARD	The test could not relate the internal ID to the port (no board). This could be due to incorrect translations, no board is inserted, an incorrect board is inserted, or an insane board is inserted. 1. Check to ensure that the board translations are correct. Use the **add ds1 PCSS** command to administer the DS1 interface if it is not already administered. 2. If board was already administered correctly, check the error log to determine if the board is hyperactive. If this is the case, the board is shut down. Reseating the board will re-initialize the board. 3. Issue the **busyout board** command. 4. Issue the **reset board** command. 5. Issue the **release busy board** command. 6. Issue the **test board long** command. This should re-establish the linkage between the internal ID and the port.

Control Channel Looparound Test (#52)

This test queries the circuit pack for its circuit pack code and vintage and verifies its records.

Table 3-138. TEST #52 Control Channel Looparound Test

Error Code	Test Result	Description/ Recommendation
None 2100	ABORT	System resources required for this test are not available. 1. Retry the command at 1-minute intervals a maximum of 5 times.
	FAIL	The test failed because the circuit pack did not return the circuit pack code or vintage. **NOTE:** Error type 1538 in the error log indicates hyperactivity. The hyperactive circuit pack is out of service and one or more of the following symptoms may be exhibited. 1. The DS1-BD tests (such as Test 138 and Test 139) are aborting with error code 2000. 2. The tests run on the ports of this circuit pack are returning a no board result. 3. A **busyout** or a **release** command has no affect on the test result. 4. A **list config** command shows that the circuit pack and the ports are properly installed. When hyperactivity occurs, the circuit pack is isolated from the system, and all of the trunks for this circuit pack are placed into the out of service state. The system will try to restore the circuit pack within 15 minutes. When no faults are detected for 15 minutes, the DS1 interface circuit pack is restored to normal operation. All of the trunks for the DS1 interface circuit pack are then returned to the in service state. Hyperactivity is often caused by the associated facility. In such a case, faults (such as slips, misframes, or blue alarms) would be entered in the error log. In addition, many hardware errors would be logged against the associated trunk circuits. If the facility is OK and the error occurs again after 15 minutes, replace the circuit pack. 1. Retry the command for a maximum of 5 times. 2. If the problem continues, check for hyperactivity. Resolve the problem, as appropriate. 3. If there is no longer hyperactivity, retry the command for a maximum of 5 times. 4. If the test continues to fail, replace the circuit pack.
	PASS	Communication with this circuit pack is successful.

Continued on next page

Table 3-138. TEST #52 Control Channel Looparound Test — *Continued*

Error Code	Test Result	Description/ Recommendation
0	NO BOARD	The test could not relate the internal ID to the port (no board). This could be due to incorrect translations, no board is inserted, an incorrect board is inserted, or an insane board is inserted. 1. Check to ensure that the board translations are correct. Use the **add ds1 PCSS** command to administer the DS1 interface if it is not already administered. 2. If board was already administered correctly, check the error log to determine if the board is hyperactive. If this is the case, the board is shut down. Reseating the board will re-initialize the board. 3. If the board was found to be correctly inserted in step 1, issue the **busyout board** command. 4. Issue the **reset board** command. 5. Issue the **release busy board** command. 6. Issue the **test board long** command. This should re-establish the linkage between the internal ID and the port.

SAKI Sanity Test (#53)

This test is destructive. This test resets the circuit pack.

Table 3-139. TEST #53 SAKI Sanity Test

Error Code	Test Result	Description/ Recommendation
None	ABORT	System resources required for this test are not available. 1. Retry the command at 1-minute intervals a maximum of 5 times.
1005	ABORT	Wrong circuit pack configuration to run this test. This error applies only to DS1 Interface circuit packs. It means the DS1 Interface circuit pack is providing timing for the system and, therefore, it cannot be reset without major system disruptions. 1. If the circuit pack needs to be reset, then set synchronization to another DS1 Interface circuit pack or to the Tone-Clock circuit pack and try again. Refer to "SYNC (Synchronization)" documentation.

Continued on next page

Table 3-139. TEST #53 SAKI Sanity Test — *Continued*

Error Code	Test Result	Description/ Recommendation
1015	ABORT	Port is not out-of-service. 1. Busyout the circuit pack. 2. Execute the command again.
2100	ABORT	System resources required for this test are not available. 1. Retry the command at 1-minute intervals a maximum of 5 times.
1	FAIL	The circuit pack failed to reset.
2	FAIL	The circuit pack failed to restart. 1. Execute the command again. 2. If the problem persists, replace the circuit pack.
	PASS	The circuit pack initializes correctly. 1. Run the Short Test Sequence.
0	NO BOARD	The test could not relate the internal ID to the port (no board). This could be due to incorrect translations, no board is inserted, an incorrect board is inserted, or an insane board is inserted. 1. Check to ensure that the board translations are correct. Use the **add ds1 PCSS** command to administer the DS1 interface if it is not already administered. 2. If board was already administered correctly, check the error log to determine if the board is hyperactive. If this is the case, the board is shut down. Reseating the board will re-initialize the board. 3. If the board was found to be correctly inserted in step 1, issue the **busyout board** command. 4. Issue the **reset board** command. 5. Issue the **release busy board** command. 6. Issue the **test board long** command. This should re-establish the linkage between the internal ID and the port.

Internal Looparound Test (#135)

This test is destructive.

The Internal Looparound Test is run by looping the transmitted DS1 bit stream back into the DS1's board receiver. The loop occurs just before the DS1 facility

interface. The test is highly destructive and can only be initiated by a system technician-demanded **reset board PCSS** command.

All trunks on the DS1 Interface circuit pack must be busied out via the system technician **busy-out board** command before running the Internal Looparound Test. When the Internal Looparound Test is initiated, maintenance software sends appropriate messages to the DS1 Interface circuit pack to start the test. The test uses the Tone Generator and Tone Detector to exercise a bit pattern consistency test for all ports. If the transmitted and received bit patterns on a trunk are different, the test fails.

When the test is complete, the maintenance software sends a stop loop around message to the DS1 Interface circuit pack to put the circuit pack back into the normal operation mode. All trunks of the DS1 Interface circuit pack are restored to the in-service state after the **release board** command is entered

Table 3-140. TEST #135 Internal Looparound Test

Error Code	Test Result	Description/ Recommendation
2012	ABORT	Internal system error 1. Retry the command at 1-minute intervals a maximum of 5 times.
1002	ABORT	The system could not allocate time slots for the test. The system may be under heavy traffic conditions or it may have time slots out-of-service due to TDM-BUS errors. Refer to “TDM-BUS” to diagnose TDM-BUS errors. 1. If system has no TDM-BUS errors and is not handling heavy traffic, repeat test at 1-minute intervals a maximum of 5 times.
1003	ABORT	The system could not allocate a tone receiver for the test. The system may be oversized for the number of Tone Detectors present or some Tone Detectors may be out-of-service. 1. Resolve any “TTR-LEV” errors in the Error Log. 2. Resolve any “TONE-PT” errors in the Error Log. 3. If neither condition exists, retry the test at 1-minute intervals a maximum of 5 times.
1004	ABORT	Received an incoming call on a port of the DS1 circuit pack during the test. 1. Enter the **busy-out board PCSS** command to put all trunks of DS1 Interface circuit pack to out-of-service state. 2. Retry the command at 1-minute intervals a maximum of 5 times.
1015	ABORT	Ports on DS1 Interface circuit pack have not been busied out. 1. Enter the **busy-out board PCSS** command to put all trunks of the DS1 Interface circuit pack into out-of-service state. 2. Retry the command.

Continued on next page

Table 3-140. TEST #135 Internal Looparound Test — *Continued*

Error Code	Test Result	Description/ Recommendation
1039	ABORT	The DS1 Interface circuit pack is providing timing for the system. Therefore, it cannot be reset without major system disruption. 1. If the DS1 Interface circuit pack needs to be tested, set the synchronization reference to another DS1 Interface circuit pack or to the Tone-Clock circuit pack via the following command sequence: ■ Issue the **disable synchronization-switch** command. ■ Next, issue the **set synchronization PCSS** command. ■ Lastly, issue the **enable synchronization-switch** command.
2000	ABORT	The test was aborted. Response to the test was not received within the allowable time period. This may be due to hyperactivity. Error type 1538 in the error log indicates hyperactivity. The hyperactive circuit pack is out of service and one or more of the following symptoms may be exhibited. 1. The DS1-BD tests (such as Test 139 and Test 140) are aborting with error code 2000. 2. The tests run on the ports of this circuit pack are returning a no board result. 3. A **busyout** or a **release** command has no affect on the test results. 4. A **list config** command shows that the circuit pack and the ports are properly installed. **NOTE:** When hyperactivity occurs, the circuit pack is isolated from the system, and all of the trunks for this circuit pack are placed into the out of service state. The system will try to restore the circuit pack within 15 minutes. When no faults are detected for 15 minutes, the DS1 interface circuit pack is restored to normal operation. All of the trunks for the DS1 interface circuit pack are then returned to the in service state. Hyperactivity is often caused by the associated facility. In such a case, faults (such as slips, misframes, or blue alarms) would be entered in the error log. In addition, many hardware errors would be logged against the associated trunk circuits. If the facility is OK and the error occurs again after 15 minutes, replace the circuit pack.
2100	ABORT	Could not allocate the necessary system resources to run this test. 1. Retry the command at 1-minute intervals for a maximum of 5 times.

Continued on next page

Table 3-140. TEST #135 Internal Looparound Test — *Continued*

Error Code	Test Result	Description/ Recommendation
	FAIL	DS1 Interface circuit pack failed in the Internal Looparound Test. 1. Retry the command at 1-minute intervals a maximum of 5 times. 2. If the DS1 Interface circuit pack is TN767, enter the **list measurement ds1-log PCSS** command to read the error seconds measurement. Otherwise, skip this step. 3. Verify that both endpoints of the DS1 link are administered using the same signaling mode, framing mode, and line coding. 4. Check the physical connectivity of DS1 Interface circuit packs and cable. 5. If all of the above are OK, replace the local DS1 Interface circuit pack and repeat the test. 6. Contact T1 Network Service to diagnose remote DS1 endpoint.
	PASS	All administered trunks of DS1 Interface circuit pack pass the Internal Looparound Test. The bit pattern consistency test is executed successfully over the path that covers a DS1 port, cable, and the external NCTE device.
0	NO BOARD	The test could not relate the internal ID to the port (no board). This could be due to incorrect translations, no board is inserted, an incorrect board is inserted, or an insane board is inserted. 1. Check to ensure that the board translations are correct. Use the **add ds1 PCSS** command to administer the DS1 interface if it is not already administered. 2. If board was already administered correctly, check the error log to determine if the board is hyperactive. If this is the case, the board is shut down. Reseating the board will re-initialize the board. 3. If the board was found to be correctly inserted in step 1, issue the **busyout board** command. 4. Issue the **reset board** command. 5. Issue the **release busy board** command. 6. Issue the **test board long** command. This should re-establish the linkage between the internal ID and the port.

Loss of Signal Alarm Inquiry Test (#138)

This test verifies the synchronization status and continuity of the DS1 link. The Loss of Signal alarm indicates that the DS1 Interface circuit pack is unable to derive the synchronization clock from the DS1 facility. When the DS1 Interface

circuit pack detects a Loss of Signal alarm, it stops providing the synchronization clock for the system if it is administered as a timing source and transmits a Yellow alarm to the remote DS1 endpoint.

When the Loss of Signal alarm is confirmed, the maintenance software places all trunks or ports of the DS1 Interface circuit pack into the out-of-service state. The inquiry test will run every 10 minutes until the loss of signal has been restored. The DS1 Interface circuit pack raises a Loss of Signal alarm after the signal has been lost for about 1second. It will not retire the alarm until the signal has returned for about 10 seconds.

This test is also used to maintain the new 120A CSU Module. This Module, when combined with the functionality provided by the TN767E circuit pack, provides functionality equivalent to an external standalone ESF T1 CSU.

If a TN767E circuit pack detects certain ICSU hardware errors, it will notify maintenance. When the maintenance subsystem receives notification of the I-CSU error, it will execute this Loss of Signal Inquiry test. The test, in addition to querying for a Loss Of Signal alarm condition, will also query the TN767E board to confirm the I-CSU error. A Minor or Warning alarm will be raised depending on the severity of the ICSU error. The trunks on the board may be taken out of service if the ICSU error is deemed serious.

If a Loss Of Signal alarm and an ICSU error co-exist, the Loss Of Signal alarm condition will take priority and the board and all trunks on the board will be put in the out-of-service state. Errors will be logged, however, for both.

When the maintenance subsystem receives notification that the ICSU hardware error condition no longer exists, maintenance will restore the board and all trunks to their previous service state if the alarm can be cleared (no other ICSU errors or Loss Of Signal alarm exist)

Table 3-141. TEST #138 Loss of Signal Alarm Inquiry Test

Error Code	Test Result	Description/ Recommendation
	ABORT	Internal system error
2100	ABORT	Could not allocate the necessary system resources to run this test. 1. Retry the command at 1-minute intervals a maximum of 5 times.

Continued on next page

Table 3-141. TEST #138 Loss of Signal Alarm Inquiry Test — *Continued*

Error Code	Test Result	Description/ Recommendation
2000	ABORT	Response to the test was not received within the allowable time period. This may be due to hyperactivity. Error type 1538 in the error log indicates hyperactivity. The hyperactive circuit pack is out of service and one or more of the following symptoms may be exhibited. 1. The DS1-BD tests (such as test 138 and test 139) are aborting with error code 2000. 2. The tests run on the ports of this circuit pack are returning a no board result. 3. A **busyout** or a **release** command has no affect on the test results. 4. A **list config** command shows that the circuit pack and the ports are properly installed. **NOTE:** When hyperactivity occurs, the circuit pack is isolated from the system, and all of the trunks for this circuit pack are placed into the out of service state. The system will try to restore the circuit pack within 15 minutes. When no faults are detected for 15 minutes, the DS1 interface circuit pack is restored to normal operation. All of the trunks for the DS1 interface circuit pack are then returned to the in service state. Hyperactivity is often caused by the associated facility. In such a case, faults (such as slips, misframes, or blue alarms) would be entered in the error log. In addition, many hardware errors would be logged against the associated trunk circuits. If the facility is OK and the error occurs again after 15 minutes, replace the circuit pack.
	FAIL	DS1 Interface circuit pack detects a Loss of Signal alarm. The physical link is broken or the remote DS1 endpoint is down. All trunks or ports of this DS1 interface circuit pack are out-of-service. If the DS1 Interface circuit pack is designated as the supplier of the system synchronization source, then the system synchronization maintenance will adopt a source elsewhere. Refer to "SYNC (Synchronization)" section for details. 1. If the DS1 Interface circuit pack connects to a T1 facility, call the vendor of the T1 carrier to diagnose the remote DS1 endpoint. If the DS1 Interface circuit pack connects directly to a switch, call the system technician of the remote switch to diagnose the DS1 endpoint. 2. Check the physical connection of the DS1 Interface circuit pack and the cable. If a 120A CSU Module is physically connected to a TN767E board on the back of the port carrier, check the physical connection of the CSU Module and make sure the Network Interface cable is plugged into the CSU Module's NETWORK jack.

Continued on next page

Table 3-141. TEST #138 Loss of Signal Alarm Inquiry Test — *Continued*

Error Code	Test Result	Description/ Recommendation
1300	FAIL	The CSU Module is missing. The *Near-End CSU Type* field on the *add ds1* form has been administered as *integrated* but the 120A CSU Module is not physically connected to the TN767E board on the back of the port carrier. 1. If using the 120A CSU Module, plug the CSU Module into the TN767E circuit pack's connector on the I/O connector panel on back of the carrier. Otherwise, change the *Near-End CSU Type* field using the *change ds1* form to *other*. 2. Run the test again.
1301	FAIL	The 120A CSU Module is physically connected to the TN767E board on the back of the port carrier but the *Near-End CSU Type* field on the *add ds1* form has not been administered as *integrated*. 1. If the 120A CSU Module is to be used, use the *change ds1* command to change the *Near-End CSU Type* field to *integrated*. Otherwise, physically remove the 120A CSU Module from the back of the port carrier. 2. Run the test again.
1302	FAIL	Attempting to use the 120A CSU Module with a TN767E circuit pack that is configured for 32-channel (2.048 Mbps) operation. The CSU Module only works with a DS1 board configured for 24-channel (1.544 Mbps) operation in the United States of America. 1. If the 120A CSU Module is to be used, physically remove the TN767E circuit pack and reconfigure for 24-channel (1.544 Mbps) operation. 2. Reinsert the circuit pack and run the test again.
1303	FAIL	The DS1 circuit pack Suffix is incorrect for CSU Module administration. The *Near-End CSU Type* field on the *add ds1* form has been administered as *integrated* but the DS1 circuit pack is not a TN767E or later suffix DS1 board. 1. If the CSU Module is to be used, and the `Near-End CSU` Type field is set to `integrated`, to allow for CSU module administration, remove the circuit pack and replace it with a TN767E or later suffix board. Otherwise use the **change ds1** command to change the `Near-End CSU Type` field to **other**.
1310	FAIL	The DS1 Board Loopback (BLB) demand test (#1209) failed. 1. Repeat the test using the **test ds1-loop PCSS ds1/csu-loopback-tests** command. 2. If the BLB test continues to fail, then replace the TN767E circuit pack. 3. Run this test again.

Continued on next page

Table 3-141. TEST #138 Loss of Signal Alarm Inquiry Test — *Continued*

Error Code	Test Result	Description/ Recommendation
1311	FAIL	The Integrated CSU (I-CSU) Module Equipment Loopback (ELB) test (#1210) failed. This test is executed by the ICSU during ICSU power-up/reset (TN767E board physically inserted and 120A CSU Module already installed) or when the 120A CSU Module is plugged on to an already initialized DS1 board. The ELB test is also executed as part of the command **test ds1-loop PCSS ds1/csu-loopback-tests**. 1. Execute **test ds1-loop PCSS ds1/csu-loopback-tests**. 2. If the ELB test continues to fail, then either the TN767E board, the CSU Module, or the I/O cable between the backplane and the CSU module (or any combination thereof) has failed. Attempt to isolate the problem to one of these areas. Begin by replacing the CSU Module and running the ***t*est ds1-loop PCSS ds1/csu-loopback-tests** command again. 3. If the ELB test continues to fail, then replace the TN767E board and run **test ds1-loop PCSS ds1/csu-loopback-tests** again. 4. If the ELB test continues to fail, the problem could be in the I/O cable between the backplane and the CSU module.
1312	FAIL	The Integrated CSU (I-CSU) Module Repeater Loopback (RLB) test (#1211) failed. This test is executed by the ICSU during ICSU power-up/reset (TN767E board physically inserted and 120A CSU Module already installed) or when the 120A CSU Module is plugged on to an already initialized DS1 board. The RLB test is also executed as part of the command ***t*est ds1-loop PCSS ds1/csu-loopback-tests**. 1. Execute **test ds1-loop PCSS ds1/csu-loopback-tests**. 2. If the RLB test continues to fail, then replace the CSU Module. 3. Run this test again.
1313	FAIL	The TN767E circuit pack could not deactivate a CPE Loopback Jack loopback. 1. Execute ***t*est ds1-loop PCSS end-loopback/span-test**. 2. If the attempt to deactivate the CPE Loopback Jack is not successful, check the cabling and investigate the problem at the CPE Loopback Jack. 3. Run the test again.
1314	FAIL	The TN767E circuit pack could not deactivate a far-end CSU loopback. 1. Execute **test ds1-loop PCSS end-loopback/span-test**.

Continued on next page

Table 3-141. TEST #138 Loss of Signal Alarm Inquiry Test — *Continued*

Error Code	Test Result	Description/ Recommendation
1320	FAIL	A 120A CSU module hardware failure or an ICSU serial interface audit failure was detected by the TN767E DS1 circuit pack. 1. Replace the CSU module, and then run the test again. 2. If the test continues to fail with this error code, replace the TN767E and run the test again. 3. If the test continues to fail with this error code, the problem could be in the I/O cable between the backplane and the CSU module.
1321	FAIL	DTE LOS (loss of signal) was detected between the TN767E DS1 board and the 120A CSU Module. Either the TN767E board, the 120A CSU Module, or the I/O cable between the backplane and the CSU module (or any combination thereof) has failed. Attempt to isolate the problem to one of these areas. 1. Replace the CSU Module and run the test again. 2. If the test continues to fail with this error code, then replace the TN767E board and run the test again. 3. If the test continues to fail with this error code, the problem could be in the I/O cable between the backplane and the CSU module.
1322	FAIL	No 5 volts power detected from the TN767E circuit pack to the 120A CSU Module. Problem probably due to an open fuse on the DS1 board or a faulty ICSU. **NOTE** *Do not swap DS1 boards as this may open the fuse on the new board*. 1. Remove the TN767E from the system and reinsert. 2. Run the test again once the board has finished its reset. 3. If the test continues to fail with this error code, then replace the CSU Module and run the test again. 4. If the test continues to fail with this error code, then replace the TN767E board and run the test again. 5. If the test continues to fail with this error code, the problem could be in the I/O cable between the backplane and the CSU module.
1323	FAIL	A service affecting CSU Module audit failure was detected by the TN767E DS1 circuit pack. All administered ports on the DS1 circuit pack are affected and maintenance software will place the ports into the out-of-service state. 1. Replace the 120A CSU Module.
1324	FAIL	A non-service affecting CSU Module audit failure was detected by the TN767E DS1 circuit pack. No ports should be affected. No immediate action is required. These errors indicate that the CSU Module hardware may have a problem, and that it should be replaced when practical to avoid further deterioration.

Continued on next page

Table 3-141. TEST #138 Loss of Signal Alarm Inquiry Test — *Continued*

Error Code	Test Result	Description/ Recommendation
	PASS	DS1 signal is present and the physical link is healthy. In addition, no Integrated CSU errors are detected.
0	NO BOARD	The test could not relate the internal ID to the port (no board). This could be due to incorrect translations, no board is inserted, an incorrect board is inserted, or an insane board is inserted. 1. Check to ensure that the board translations are correct. Use the **add ds1 PCSS** command to administer the DS1 interface if it is not already administered. 2. If board was already administered correctly, check the error log to determine if the board is hyperactive. If this is the case, the board is shut down. Reseating the board will re-initialize the board. 3. If the board was found to be correctly inserted in step 1, issue the **busyout board** command. 4. Issue the **reset board** command. 5. Issue the **release busy board** command. 6. Issue the **test board long** command. This should re-establish the link between the internal ID and the port.

Blue Alarm Inquiry Test (#139)

The Blue Alarm is a signal sent by the remote DS1 endpoint when it is out-of-service. The Blue Alarm Inquiry Test checks the blue alarm status of the remote DS1 endpoint.

When the DS1 Interface circuit pack detects a Blue Alarm signal from the remote DS1 endpoint, the circuit pack will transmit a Yellow alarm to the remote DS1 endpoint and send a BLUE ALARM message to the maintenance software. When the Blue alarm is confirmed, the maintenance software places all trunks of the DS1 Interface circuit pack into the out-of-service state. The inquiry test will be run every 10 minutes until the Blue alarm is cleared.

The DS1 Interface circuit pack takes 2 seconds to recognize and report a Blue alarm and 16 seconds to recognize and report the resolution of a Blue alarm. When the Blue alarm is cleared, the DS1 Interface circuit pack stops transmitting the Yellow alarm and places the trunks back into the service state before the Blue alarm occurs.

Line Loopback Alarm

The Line Loopback (LLB) is used by the remote DS1 endpoint to put the ICSU or DS1 into a loopback mode. When the ICSU or DS1 Board is in the LLB mode, the arriving bit pattern is regenerated and sent back. Line Loopback (LLB) Alarm is activated when the in-band activate LLB bit pattern has been arriving continuously for 5 seconds on the DS1 line. LLB is deactivated when the in-band deactivate LLB bit pattern has been arriving continuously for 5 seconds on the DS1 line.

Since LLB is a maintenance condition rendering all DS0 channels unavailable for signaling or bearer traffic, maintenance software treats this the same as a Blue Alarm.

Payload Loopback Alarm

The Payload Loopback (PLB) is used by the remote DS1 endpoint to put the switch DS1 into a loopback mode. PLB Alarm is activated when a network protocol activate bit pattern arrives over the 4-Kbps ESF data link on the DS1 line. PLB is deactivated when a network protocol deactivate bit pattern arrives over the 4-Kbps ESF data link on the DS1 line.

Since PLB is a maintenance condition rendering all DS0 channels unavailable for signaling or bearer traffic, maintenance software treats this the same as a Blue Alarm

Table 3-142. TEST #139 Blue Alarm Inquiry Test

Error Code	Test Result	Description/ Recommendation
	ABORT	Internal system error
2100	ABORT	Could not allocate the necessary system resources to run this test. 1. Retry the command at 1-minute intervals a maximum of 5 times.

Continued on next page

Table 3-142. TEST #139 Blue Alarm Inquiry Test — *Continued*

Error Code	Test Result	Description/ Recommendation
2000	ABORT	Response to the test was not received within the allowable time period. This may be due to hyperactivity. Error type 1538 in the error log indicates hyperactivity. The hyperactive circuit pack is out of service and one or more of the following symptoms may be exhibited. 1. The DS1-BD tests (such as test 138 and test 139) are aborting with error code 2000. 2. The tests run on the ports of this circuit pack are returning a no board result. 3. A **busyout** or a **release** command has no affect on the test results. 4. A **list config** command shows that the circuit pack and the ports are properly installed. **NOTE:** When hyperactivity occurs, the circuit pack is isolated from the system, and all of the trunks for this circuit pack are placed into the out of service state. The system will try to restore the circuit pack within 15 minutes. When no faults are detected for 15 minutes, the DS1 interface circuit pack is restored to normal operation. All of the trunks for the DS1 interface circuit pack are then returned to the in service state. Hyperactivity is often caused by the associated facility. In such a case, faults (such as slips, misframes, or blue alarms) would be entered in the error log. In addition, many hardware errors would be logged against the associated trunk circuits. If the facility is OK and the error occurs again after 15 minutes, replace the circuit pack.
	FAIL	The remote DS1 endpoint is out-of-service. 1. If the DS1 interface circuit pack connects to a T1 facility, call the vendor of the T1 carrier to diagnose the remote endpoint. 2. If the DS1 interface circuit pack connects directly to a switch, call the system technician of the remote switch to diagnose the DS1 endpoint.
1794	FAIL	The DS1 Interface circuit pack detects a Line Loopback Alarm (LLB). 1. If the DS1 interface circuit pack connects to a T1 facility, call the vendor of the T1 carrier to diagnose the remote DS1 endpoint. 2. If the DS1 interface circuit pack connects directly to a switch, call the system technician of the remote switch to diagnose the DS1 endpoint. 3. If the DS1 interface circuit pack connects directly to a line-side terminating device (for example, a PRI terminal adapter), call the vendor of the terminating device to diagnose the equipment.

Continued on next page

Table 3-142. TEST #139 Blue Alarm Inquiry Test — *Continued*

Error Code	Test Result	Description/ Recommendation
1795	FAIL	The DS1 Interface circuit pack detects a Payload Loopback Alarm (PLB). If the DS1 Interface circuit pack connects to a leased T1 facility, call the vendor of the T1 carrier to diagnose the remote DS1 endpoint. If the DS1 Interface circuit pack connects directly to another DS1 board, call the system technician of the remote switch to diagnose the DS1 endpoint.
	PASS	Remote DS1 endpoint is in-service. Neither a Blue alarm nor a Line Loopback alarm nor a Payload Loopback alarm is detected in the DS1 Interface circuit pack.
0	NO BOARD	The test could not relate the internal ID to the port (no board). This could be due to incorrect translations, no board is inserted, an incorrect board is inserted, or an insane board is inserted. 1. Check to ensure that the board translations are correct. Use the **add ds1 PCSS** command to administer the DS1 interface if it is not already administered. 2. If board was already administered correctly, check the error log to determine if the board is hyperactive. If this is the case, the board is shut down. Reseating the board will re-initialize the board. 3. If the board was found to be correctly inserted in step 1, issue the **busyout board** command. 4. Issue the **reset board** command. 5. Issue the **release busy board** command. 6. Issue the **test board long** command. This should re-establish the link between the internal ID and the port.

Red Alarm Inquiry Test (#140)

DS1 Interface circuit pack raises a Red alarm when the framing pattern of the incoming DS1 bit stream has been lost. The Red Alarm Inquiry Test checks the framing status of a DS1 Interface circuit pack. DS1 Interface circuit pack takes 3 seconds to recognize and report a Red alarm and 10 seconds to recognize and report the resolution of a Red alarm.

When the DS1 Interface circuit pack detects a Red alarm, the circuit pack will transmit a Yellow alarm to the remote DS1 endpoint and send a RED ALARM message to the maintenance software. After the Red alarm is confirmed, the maintenance software places all trunks of the circuit pack into the out-of-service state. The inquiry test will be run every 10 minutes until the Red alarm is cleared.

When the Red alarm is cleared, the DS1 Interface circuit pack will stop transmitting the Yellow alarm to the remote DS1 endpoint. The maintenance software restores all trunks of the DS1 Interface circuit pack to the service state before the Red alarm occurs.

Loss of Multiframe Alarm: If the DS1 Interface circuit pack is administered using DMI-BOS signaling, the DS1 Interface circuit pack raises a Loss of Multiframe Alarm (LMA) when it cannot interpret the incoming signaling bits to synchronize to the multiframe pattern received in the 24th channel. Once DS1 Interface circuit pack detects an LMA, the circuit pack will transmit a Remote Multiframe Alarm (RMA) to the remote DS1 endpoint. Maintenance software handles both Red alarm and LMA alarm(s) using the same mechanism.

Table 3-143. TEST #140 Red Alarm Inquiry Test

Error Code	Test Result	Description/ Recommendation
	ABORT	Internal system error
2100	ABORT	Could not allocate the necessary system resources to run this test. 1. Retry the command at 1-minute intervals a maximum of 5 times.
2000	ABORT	Response to the test was not received within the allowable time period. This may be due to hyperactivity. Error type 1538 in the error log indicates hyperactivity. The hyperactive circuit pack is out of service and one or more of the following symptoms may be exhibited. 1. The DS1-BD tests (such as test 138 and test 139) are aborting with error code 2000. 2. The tests run on the ports of this circuit pack are returning a no board result. 3. A **busyout** or a **release** command has no affect on the test results. 4. A **list config** command shows that the circuit pack and the ports are properly installed. **NOTE:** When hyperactivity occurs, the circuit pack is isolated from the system, and all of the trunks for this circuit pack are placed into the out of service state. The system will try to restore the circuit pack within 15 minutes. When no faults are detected for 15 minutes, the DS1 interface circuit pack is restored to normal operation. All of the trunks for the DS1 interface circuit pack are then returned to the in service state. Hyperactivity is often caused by the associated facility. In such a case, faults (such as slips, misframes, or blue alarms) would be entered in the error log. In addition, many hardware errors would be logged against the associated trunk circuits. If the facility is OK and the error occurs again after 15 minutes, replace the circuit pack.

Continued on next page

Table 3-143. TEST #140 Red Alarm Inquiry Test — *Continued*

Error Code	Test Result	Description/ Recommendation
	FAIL	The DS1 Interface circuit pack detects a Red alarm. An out-of-frame condition occurs on the DS1 Interface circuit pack. DS1 Interface circuit pack will transmit a Yellow alarm to the remote DS1 endpoint until the Red alarm is retired. 1. Verify that both endpoints of the DS1 link are administered using the same signaling mode, framing mode, and line coding. Likewise, verify that any intermediate CSU's are administered correctly. 2. If the DS1 interface circuit pack connects to a T1 facility, call the vendor of the T1 carrier to diagnose the remote DS1 endpoint. If the DS1 interface circuit pack connects directly to a switch, call the system technician of the remote switch to diagnose the DS1 endpoint. 3. Check the physical connectivity of the DS1 pack and of the cable. 4. Replace the local DS1 interface circuit pack, and repeat the test.
1	FAIL	The DS1 interface circuit pack detected a loss of multiframe alarm (LMA). An out of frame condition occurred on the DS1 interface circuit pack. The DS1 interface circuit pack will transmit a remote multiframe alarm (RMA) to the remote DS1 endpoint until the LMA is retired. 1. Verify that both endpoints of the DS1 link are administered using the same signaling mode, framing mode, and line coding. Likewise, verify that any intermediate CSU's are administered correctly. 2. If the DS1 interface circuit pack connects to a T1 facility, call the vendor of the T1 carrier to diagnose the remote DS1 endpoint. If the DS1 interface circuit pack connects directly to a switch, call the system technician of the remote switch to diagnose the DS1 endpoint. 3. Check the physical connectivity of the DS1 pack and of the cable. 4. Replace the local DS1 interface circuit pack, and repeat the test.
	PASS	No Red alarm is detected on DS1 Interface circuit pack.

Continued on next page

Table 3-143. TEST #140 Red Alarm Inquiry Test — *Continued*

Error Code	Test Result	Description/ Recommendation
0	NO BOARD	The test could not relate the internal ID to the port (no board). This could be due to incorrect translations, no board is inserted, an incorrect board is inserted, or an insane board is inserted. 1. Check to ensure that the board translations are correct. Use the **add ds1 PCSS** command to administer the DS1 interface if it is not already administered. 2. If board was already administered correctly, check the error log to determine if the board is hyperactive. If this is the case, the board is shut down. Reseating the board will re-initialize the board. 3. If the board was found to be correctly inserted in step 1, issue the **busyout board** command. 4. Issue the **reset board** command. 5. Issue the **release busy board** command. 6. Issue the **test board long** command. This should re-establish the linkage between the internal ID and the port.

Yellow Alarm Inquiry Test (#141)

Receiving a Yellow alarm from remote DS1 endpoint indicates that the remote DS1 endpoint has an out-of-frame condition. The Yellow Alarm Inquiry Test is used to determine whether the remote DS1 endpoint is transmitting a Yellow alarm. The DS1 Interface circuit pack takes 500 msec to recognize and report a Yellow alarm and 500 msec to recognize and report that a Yellow alarm condition is cleared.

When the DS1 Interface circuit pack detects a Yellow alarm from the remote DS1 endpoint, it will send a YELLOW-ALARM uplink message to the maintenance software. After the maintenance software receives the YELLOW-ALARM message, the Yellow Alarm Inquiry Test is run to confirm the Yellow alarm. Once the Yellow alarm is confirmed, the maintenance software places all trunks on the circuit pack into the out-of-service state. The Inquiry Test will be run every 10 minutes until the Yellow alarm is cleared.

When the Yellow alarm is cleared, the maintenance software restores all trunks on the DS1 Interface circuit pack back to their previous service state before the Yellow alarm is raised.

This Yellow Alarm corresponds to the yellow F2 state documented in CCITT recommendation I.431.

Remote Multiframe Alarm: Remote Multiframe Alarm (RMA) indicates that the remote DS1 endpoint is in a Loss of Multiframe Alarm condition while the DS1 Interface circuit pack is administered using the DMI-BOS common channel signaling. The RMA is handled as a Yellow alarm.

Yellow F5 State Alarm: For 32-channel E1 operation with CRC4 on, the F5 fault state is defined as a fault in the user-network interface, specifically in the direction from the user (PBX) to the network. Refer to CCITT recommendation I.431

Table 3-144. TEST #141 Yellow Alarm Inquiry Test

Error Code	Test Result	Description/ Recommendation
	ABORT	Internal system error
2100	ABORT	Could not allocate the necessary system resources to run this test. 1. Retry the command at 1-minute intervals a maximum of 5 times.
2000	ABORT	Response to the test was not received within the allowable time period. This may be due to hyperactivity. Error type 1538 in the error log indicates hyperactivity. The hyperactive circuit pack is out of service and one or more of the following symptoms may appear. 1. The DS1-BD tests (such as test 138 and test 139) are aborting with error code 2000. 2. The tests run on the ports of this circuit pack are returning a no board result. 3. A **busyout** or a **release** command has no affect on the test results. 4. A **list config** command shows that the circuit pack and the ports are properly installed. **NOTE:** When hyperactivity occurs, the circuit pack is isolated from the system, and all of the trunks for this circuit pack are placed into the out of service state. The system will try to restore the circuit pack within 15 minutes. When no faults are detected for 15 minutes, the DS1 interface circuit pack is restored to normal operation. All of the trunks for the DS1 interface circuit pack are then returned to the in service state. Hyperactivity is often caused by the associated facility. In such a case, faults (such as slips, misframes, or blue alarms) would be entered in the error log. In addition, many hardware errors would be logged against the associated trunk circuits. If the facility is OK and the error occurs again after 15 minutes, replace the circuit pack.

Continued on next page

Table 3-144. TEST #141 Yellow Alarm Inquiry Test — *Continued*

Error Code	Test Result	Description/ Recommendation
	FAIL	The DS1 interface circuit pack detected a yellow alarm sent by the remote DS1 endpoint. An out of frame condition occurred at the DS1 endpoint.
1	FAIL	The DS1 Interface circuit pack detects a Remote Multiframe Alarm sent by the remote DS1 endpoint. An out-of-frame condition occurs on the remote DS1 endpoint.
2	FAIL	The DS1 Interface circuit pack is reporting a yellow F5 State alarm. There is a fault in the user-network interface from the user (PBX) to the network. 1. Verify that both endpoints of the DS1 link are administered using the same signaling mode, framing mode, and line coding. Likewise, verify that any intermediate CSUs are administered correctly. 2. If the DS1 interface circuit pack connects to a T1 facility, call the vendor of the T1 carrier to diagnose the remote DS1 endpoint. If the DS1 interface circuit pack connects directly to a switch, call the system technician of the remote switch to diagnose the DS1 endpoint. 3. Check the physical connectivity of the DS1 pack and of the cable. 4. Replace the local DS1 interface circuit pack, and repeat the test.
	PASS	No Yellow alarm nor Remote Multiframe Alarm nor F5 State Alarm is received from the remote DS1 endpoint.
0	NO BOARD	The test could not relate the internal ID to the port (no board). This could be due to incorrect translations, no board is inserted, an incorrect board is inserted, or an insane board is inserted. 1. Check to ensure that the board translations are correct. Use the **add ds1 PCSS** command to administer the DS1 interface if it is not already administered. 2. If board was already administered correctly, check the error log to determine if the board is hyperactive. If this is the case, the board is shut down. Reseating the board will re-initialize the board. 3. If the board was found to be correctly inserted in step 1, issue the **busyout board** command. 4. Issue the **reset board** command. 5. Issue the **release busy board** command. 6. Issue the **test board long** command. This should re-establish the linkage between the internal ID and the port.

Major Alarm Inquiry Test (#142)

The Major alarm raised by a DS1 Interface circuit pack indicates that the average bit error rate on the DS1 facility is greater than 1/1000. The Major Alarm Inquiry Test is used to determine that the received DS1 bit error rate is greater than 1/1000. When D4 framing mode is selected, the DS1 Interface circuit pack takes 16 seconds to recognize and report a Major alarm and 16 seconds to recognize and report that a Major alarm condition is cleared. If ESF framing mode is selected, the DS1 Interface circuit pack takes 10 seconds to recognize and report a Major alarm and 10 seconds to recognize and report that a Major alarm condition is cleared.

When the DS1 Interface circuit pack detects a Major alarm, it will send a MAJOR-ALARM message to the maintenance software. After the maintenance software receives a MAJOR-ALARM message, the Major Alarm Inquiry Test is initiated to confirm the Major alarm on the DS1 Interface circuit pack. The Inquiry Test will be run every 10 minutes until the Major alarm is cleared. The maintenance software places all trunks on the circuit pack in the out-of-service state if the Major alarm persists for more than 20 minutes.

When the Major alarm is cleared, the maintenance software restores all trunks on the circuit pack to their previous service state before a Major alarm occurs.

Table 3-145. TEST #142 Major Alarm Inquiry Test

Error Code	Test Result	Description/ Recommendation
	ABORT	Internal system error
2100	ABORT	Could not allocate the necessary system resources to run this test. 1. Retry the command at 1-minute intervals a maximum of 5 times.

Continued on next page

Table 3-145. TEST #142 Major Alarm Inquiry Test — *Continued*

Error Code	Test Result	Description/ Recommendation
2000	ABORT	Response to the test was not received within the allowable time period. This may be due to hyperactivity. Error type 1538 in the error log indicates hyperactivity. The hyperactive circuit pack is out of service and one or more of the following symptoms may be exhibited. 1. The DS1-BD tests (such as test 138 and test 139) are aborting with error code 2000. 2. The tests run on the ports of this circuit pack are returning a no board result. 3. A **busyout** or a **release** command has no affect on the test results. 4. A **list config** command shows that the circuit pack and the ports are properly installed. **NOTE:** When hyperactivity occurs, the circuit pack is isolated from the system, and all of the trunks for this circuit pack are placed into the out of service state. The system will try to restore the circuit pack within 15 minutes. When no faults are detected for 15 minutes, the DS1 interface circuit pack is restored to normal operation. All of the trunks for the DS1 interface circuit pack are then returned to the in service state. Hyperactivity is often caused by the associated facility. In such a case, faults (such as slips, misframes, or blue alarms) would be entered in the error log. In addition, many hardware errors would be logged against the associated trunk circuits. If the facility is OK and the error occurs again after 15 minutes, replace the circuit pack.
	FAIL	The DS1 Interface circuit pack detects a Major alarm. The DS1 bit error rate is greater than 1/1000. 1. The performance of DS1 link between DS1 Interface circuit pack and remote DS1 endpoint is very poor. If the DS1 Interface circuit pack is TN767, enter **list measurement ds1-log PCSS** command to read the error seconds measurement. 2. Verify that both endpoints of the DS1 link are administered using the same signaling mode, framing mode, and line coding. 3. If the DS1 interface circuit pack connects to a T1 facility, call the vendor of the T1 carrier to diagnose the remote DS1 endpoint. If the DS1 interface circuit pack connects directly to a switch, call the system technician of the remote switch to diagnose the DS1 endpoint. 4. Check the physical connectivity of the DS1 pack and of the cable. 5. Replace the local DS1 interface circuit pack, and repeat the test.
	PASS	No Major alarm is detected in DS1 Interface circuit pack.

Continued on next page

Table 3-145. TEST #142 Major Alarm Inquiry Test — *Continued*

Error Code	Test Result	Description/ Recommendation
0	NO BOARD	The test could not relate the internal ID to the port (no board). This could be due to incorrect translations, no board is inserted, an incorrect board is inserted, or an insane board is inserted. 1. Check to ensure that the board translations are correct. Use the **add ds1 PCSS** command to administer the DS1 interface if it is not already administered. 2. If board was already administered correctly, check the error log to determine if the board is hyperactive. If this is the case, the board is shut down. Reseating the board will re-initialize the board. 3. If the board was found to be correctly inserted in step 1, issue the **busyout board** command. 4. Issue the **reset board** command. 5. Issue the **release busy board** command. 6. Issue the **test board long** command. This should re-establish the link between the internal ID and the port.

Minor Alarm Inquiry Test (#143)

The Minor alarm raised by a DS1 Interface circuit pack indicates that the average bit error rate on the DS1 facility is greater than 1/1,000,000, but less than 1/1000. The Minor Alarm Inquiry Test is used to determine that the received DS1 bit error rate is greater than 1/1,000,000 and less than 1/1000. When D4 framing mode is selected, the DS1 Interface circuit pack takes 41 minutes to recognize and report a Minor alarm and 41 minutes to recognize and report that a Minor alarm condition is cleared. If ESF framing mode is selected, the DS1 Interface circuit pack takes 10 minutes to recognize and report a Minor alarm and 10 minutes to recognize and report that a Minor alarm condition is cleared.

When the DS1 Interface circuit pack detects a Minor alarm condition, it will send a MINOR-ALARM message to the maintenance software. After the maintenance software receives a MINOR-ALARM message, the Minor Alarm Inquiry Test is initiated to confirm the Minor alarm. All trunks on the circuit pack are kept in the in-service state after the Minor alarm is confirmed. The Minor Alarm Inquiry Test is run every 10 minutes until the Minor alarm is cleared.

Table 3-146. TEST #143 Minor Alarm Inquiry Test

Error Code	Test Result	Description/ Recommendation
	ABORT	Internal system error
2100	ABORT	Could not allocate the necessary system resources to run this test. 1. Retry the command at 1-minute intervals a maximum of 5 times.
2000	ABORT	Response to the test was not received within the allowable time period. This may be due to hyperactivity. Error type 1538 in the error log indicates hyperactivity. The hyperactive circuit pack is out of service and one or more of the following symptoms may be exhibited. 1. The DS1-BD tests (such as test 138 and test 139) are aborting with error code 2000. 2. The tests run on the ports of this circuit pack are returning a no board result. 3. A **busyout** or a **release** command has no affect on the test results. 4. A **list config** command shows that the circuit pack and the ports are properly installed. **NOTE:** When hyperactivity occurs, the circuit pack is isolated from the system, and all of the trunks for this circuit pack are placed into the out of service state. The system will try to restore the circuit pack within 15 minutes. When no faults are detected for 15 minutes, the DS1 interface circuit pack is restored to normal operation. All of the trunks for the DS1 interface circuit pack are then returned to the in service state. Hyperactivity is often caused by the associated facility. In such a case, faults (such as slips, misframes, or blue alarms) would be entered in the error log. In addition, many hardware errors would be logged against the associated trunk circuits. If the facility is OK and the error occurs again after 15 minutes, replace the circuit pack.

Continued on next page

Table 3-146. TEST #143 Minor Alarm Inquiry Test — *Continued*

Error Code	Test Result	Description/ Recommendation
	FAIL	The DS1 Interface circuit pack detects a Minor alarm. The DS1 bit error rate is greater than 1/1,000,000 and less than 1/1000. 1. The performance of DS1 link between DS1 Interface circuit pack and remote DS1 endpoint is poor. If DS1 Interface circuit pack is TN767, enter **list measurement ds1-log PCSS** command to read the error seconds measurement. 2. Verify that both endpoints of the DS1 link are administered using the same signaling mode, framing mode, and line coding. 3. If the DS1 interface circuit pack connects to a T1 facility, call the vendor of the T1 carrier to diagnose the remote DS1 endpoint. If the DS1interface circuit pack connects directly to a switch, call the system technician of the remote switch to diagnose the DS1 endpoint. 4. Check the physical connection of the DS1 pack and of the cable. 5. Replace the local DS1 interface circuit pack, and repeat the test.
	PASS	No Minor alarm is detected in DS1 Interface circuit pack.
0	NO BOARD	The test could not relate the internal ID to the port (no board). This could be due to incorrect translations, no board is inserted, an incorrect board is inserted, or an insane board is inserted. 1. Check to ensure that the board translations are correct. Use the **add ds1 PCSS** command to administer the DS1 interface if it is not already administered. 2. If board was already administered correctly, check the error log to determine if the board is hyperactive. If this is the case, the board is shut down. Reseating the board will re-initialize the board. 3. If the board was found to be correctly inserted in step 1, issue the **busyout board** command. 4. Issue the **reset board** command. 5. Issue the **release busy board** command. 6. Issue the **test board long** command. This should re-establish the link between the internal ID and the port.

Slip Alarm Inquiry Test (144)

Slips occur when transmitter and receiver are not running at precisely the same clock rate. The DS1 Interface circuit pack can detect both positive and negative slips on the DS1 facility. The Slip Alarm Inquiry Test is used to acquire the total number of slips occurred on a DS1 link.

When the DS1 Interface circuit pack detects a slip condition, the circuit pack will increase the on-board slip counter by 1. A SLIP-COUNT message is spontaneously sent to the system software after the counter reaches a threshold (for example, 88). When the maintenance software receives the SLIP-COUNT message, the Slip Alarm Inquiry Test is initiated to query the slip counters on DS1 Interface circuit pack and total the slip counts in the maintenance software.

If the count of slips is over the threshold, a Minor alarm is raised against the DS1 Interface circuit pack. All trunks of the DS1 Interface circuit pack are still in the in-service state. If the DS1 Interface circuit pack is used to supply the system synchronization source, the MINOR alarm will initiate a synchronization source switch. See “TDM-BUS” and "SYNC (Synchronization)" for details.

Table 3-147. TEST #144 Slip Alarm Inquiry Test

Error Code	Test Result	Description/ Recommendation
	ABORT	Internal system error
2100	ABORT	Could not allocate the necessary system resources to run this test. 1. Retry the command at 1-minute intervals a maximum of 5 times.
2000	ABORT	Response to the test was not received within the allowable time period. This may be due to hyperactivity. Error type 1538 in the error log indicates hyperactivity. The hyperactive circuit pack is out of service and one or more of the following symptoms may be exhibited. 1. The DS1-BD tests (such as test 138 and test 139) are aborting with error code 2000. 2. The tests run on the ports of this circuit pack are returning a no board result. 3. A **busyout** or a **release** command has no affect on the test results. 4. A **list config** command shows that the circuit pack and the ports are properly installed. **NOTE:** When hyperactivity occurs, the circuit pack is isolated from the system, and all of the trunks for this circuit pack are placed into the out of service state. The system will try to restore the circuit pack within 15 minutes. When no faults are detected for 15 minutes, the DS1 interface circuit pack is restored to normal operation. All of the trunks for the DS1 interface circuit pack are then returned to the in service state. Hyperactivity is often caused by the associated facility. In such a case, faults (such as slips, misframes, or blue alarms) would be entered in the error log. In addition, many hardware errors would be logged against the associated trunk circuits. If the facility is OK and the error occurs again after 15 minutes, replace the circuit pack.

Continued on next page

Table 3-147. TEST #144 Slip Alarm Inquiry Test — *Continued*

Error Code	Test Result	Description/ Recommendation
1 to 88	FAIL	The DS1 interface circuit pack detected a slip alarm. The error code equals the number of slips detected by the DS1 interface circuit pack since the last slip alarm inquiry test. 1. Retry the command at 1-minute intervals a maximum of 5 times. 2. If the DS1 interface circuit pack is a TN767, enter the **list measurement ds1-log PCSS** command to read the error seconds measurement. 3. Verify that both endpoints and all intermediate equipment of the DS1 link are administered using the same signaling mode, framing mode, and line coding. 4. If the DS1 interface circuit pack connects to a T1 facility, call the vendor of the T1 carrier to diagnose the remote DS1 endpoint. If the DS1 interface circuit pack connects directly to a switch, call the system technician of the remote switch to diagnose the DS1 endpoint. 5. Check the active alarm and error logs for recent alarms and errors against the synchronization (SYNC). Follow the suggested repair procedure for these errors. 6. Check the physical connectivity of the DS1 pack and of the cable. 7. Replace the local DS1 interface circuit pack and repeat the test.
	PASS	No Slip alarm is detected on the DS1 Interface circuit pack.
0	NO BOARD	The test could not relate the internal ID to the port (no board). This could be due to incorrect translations, no board is inserted, an incorrect board is inserted, or an insane board is inserted. 1. Check to ensure that the board translations are correct. Use the **add ds1 PCSS** command to administer the DS1 interface if it is not already administered. 2. If board was already administered correctly, check the error log to determine if the board is hyperactive. If this is the case, the board is shut down. Reseating the board will re-initialize the board. 3. If the board was found to be correctly inserted in step 1, issue the **busyout board** command. 4. Issue the **reset board** command. 5. Issue the **release busy board** command. 6. Issue the **test board long** command. This should re-establish the link between the internal ID and the port.

Misframe Alarm Inquiry Test (#145)

Misframe Alarm indicates that framing bits observed on a DS1 Interface circuit pack are in error. Misframe Alarm Inquiry Test queries the total number of misframes that occurred on a DS1 Interface circuit pack since the last inquiry.

When the DS1 Interface circuit pack detects a misframe error, it will increase its misframe counter by 1. If the counter reaches the threshold, a MISFRAME-COUNT message is automatically sent to the switch maintenance software. After the maintenance software receives the MISFRAME-COUNT message, the Misframe Alarm Inquiry Test is initiated to collect the misframe counts from the DS1 Interface circuit pack.

When the threshold of misframes is reached, if the DS1 Interface circuit pack is supplying the system synchronization source, then a switching synchronization source message is sent to the TDM Bus Clock. See TDM-BUS (TDM Bus) Maintenance documentation for details. A Minor alarm against the DS1 Interface circuit pack is raised, but all trunks of the DS1 Interface circuit pack are still in the in-service state.

Table 3-148. TEST #145 Misframe Alarm Inquiry Test

Error Code	Test Result	Description/ Recommendation
	ABORT	Internal system error
2100	ABORT	Could not allocate the necessary system resources to run this test. 1. Retry the command at 1-minute intervals a maximum of 5 times.

Continued on next page

Table 3-148. TEST #145 Misframe Alarm Inquiry Test — *Continued*

Error Code	Test Result	Description/ Recommendation
2000	ABORT	Response to the test was not received within the allowable time period. This may be due to hyperactivity. Error type 1538 in the error log indicates hyperactivity. The hyperactive circuit pack is out of service and one or more of the following symptoms may appear. 1. The DS1-BD tests (such as test 138 and test 139) are aborting with error code 2000. 2. The tests run on the ports of this circuit pack are returning a no board result. 3. A **busyout** or a **release** command has no affect on the test results. 4. A **list config** command shows that the circuit pack and the ports are properly installed. **NOTE:** When hyperactivity occurs, the circuit pack is isolated from the system, and all of the trunks for this circuit pack are placed into the out of service state. The system will try to restore the circuit pack within 15 minutes. When no faults are detected for 15 minutes, the DS1 interface circuit pack is restored to normal operation. All of the trunks for the DS1 interface circuit pack are then returned to the in service state. Hyperactivity is often caused by the associated facility. In such a case, faults (such as slips, misframes, or blue alarms) would be entered in the error log. In addition, many hardware errors would be logged against the associated trunk circuits. If the facility is OK and the error occurs again after 15 minutes, replace the circuit pack.

Continued on next page

Table 3-148. TEST #145 Misframe Alarm Inquiry Test — *Continued*

Error Code	Test Result	Description/ Recommendation
ANY	FAIL	The test failed because the DS1 interface circuit pack detected errors in the received framing bits pattern. The error code equals the number of misframes detected by the DS1 interface circuit pack since the last misframe alarm inquiry test. Major bit and minor bit error rate (error types 2561 and 2817) error logs often accompany misframe alarms. Clearing the cause of these error logs may clear the misframes which are occurring. 1. Retry the command at 1-minute intervals a maximum of 5 times. 2. If the DS1 interface circuit pack is a TN767, enter the **list measurement ds1-log PCSS** command to read the error seconds measurement. 3. Verify that both endpoints and all intermediate equipment of the DS1 link are administered using the same signaling mode, framing mode, and line coding. 4. If the DS1 interface circuit pack connects to a T1 facility, call the vendor of the T1 carrier to diagnose the remote DS1 endpoint. If the DS1 interface circuit pack connects directly to a switch, call the system technician of the remote switch to diagnose the DS1 endpoint. 5. Check the active alarm and error logs for recent alarms and errors against the synchronization (SYNC). Follow the suggested repair procedure for these errors. 6. Check the physical connection of the DS1 pack and of the cable. 7. Replace the local DS1 interface circuit pack, and repeat the test.
	PASS	No Misframe alarm is detected on the DS1 Interface circuit pack.
0	NO BOARD	The test could not relate the internal ID to the port (no board). This could be due to incorrect translations, no board is inserted, an incorrect board is inserted, or an insane board is inserted. 1. Check to ensure that the board translations are correct. Use the **add ds1 PCSS** command to administer the DS1 interface if it is not already administered. 2. If board was already administered correctly, check the error log to determine if the board is hyperactive. If this is the case, the board is shut down. Reseating the board will re-initialize the board. 3. If the board was found to be correctly inserted in step 1, issue the **busyout board** command. 4. Issue the **reset board** command. 5. Issue the **release busy board** command. 6. Issue the **test board long** command. This should re-establish the link between the internal ID and the port.

Translation Update Test (#146)

The Translation Update Test sends the circuit-pack-level information specified by System Administration to the DS1 Interface circuit pack. Translation includes the following data administered for a DS1 Interface circuit pack (see output of **display ds1 PCSS** command): DS1 Link Length between two DS1 endpoints, Synchronization Source Control, All Zero Suppression, Framing Mode, Signaling Mode, Time Slot Number of 697-Hz Tone, Time Slot Number of 700-Hz Tone, etc.

If a TN767E or later DS1 circuit pack is combined with a 120A CSU Module to form and Integrated CSU Module, this test will also send the administration for this Integrated CSU to the circuit pack to assure the board's translations are correct. The administration of the CSU Module is done using the DS1 circuit pack administration form. Translation for the CSU Module includes the following data: Transmit LBO, Receive ALBO, Supply CPE Loopback Jack Power?, and so forth.

Table 3-149. TEST #146 Translation Update Test

Error Code	Test Result	Description/ Recommendation
	ABORT	Internal system error 1. Retry the command at 1-minute intervals a maximum of 5 times.
	FAIL	Internal system software error. 1. Enter the **display ds1 PCSS** command to verify the DS1 Interface circuit pack translation.
	PASS	Translation data has been downloaded to the DS1 Interface circuit pack successfully.
0	NO BOARD	The test could not relate the internal ID to the port (no board). This could be due to incorrect translations, no board is inserted, an incorrect board is inserted, or an insane board is inserted. 1. Check to ensure that the board translations are correct. Use the **add ds1 PCSS** command to administer the DS1 interface if it is not already administered. 2. If board was already administered correctly, check the error log to determine if the board is hyperactive. If this is the case, the board is shut down. Reseating the board will re-initialize the board. 3. If the board was found to be correctly inserted in step 1, issue the **busyout board** command. 4. Issue the **reset board** command. 5. Issue the **release busy board** command. 6. Issue the **test board long** command. This should re-establish the link between the internal ID and the port.

DS1 Board Loopback Test (#1209)

This test is destructive.

The DS1 Board Loopback (BLB) Test causes a loopback at the TN767E DS1 board edge and tests DS1 board internal circuitry.

The test is destructive and can only be initiated by a system technician demanded ***t*est ds1-loop PCSS ds1/csu-loopback-tests** command.

All trunks or ports on the DS1 Interface circuit pack must be busied out via the system technician **busyout board** command before running the BLB Test.

When the BLB Test is initiated, maintenance software sends an appropriate message to the TN767E DS1 Interface circuit pack to start the test. The board will set up the BLB loopback, transmit a test pattern, and verify that the pattern is received unaltered through the loopback. If the transmitted and received pattern is different, the test fails.

When the test is complete, all trunks or ports on the TN767E DS1 Interface circuit pack are restored to the in-service state after the **release board** command is entered

Table 3-150. TEST #1209 DS1 Board Loopback Test

Error Code	Test Result	Description/ Recommendation
	ABORT	Internal system error 1. Retry ***t*est ds1-loop PCSS ds1/csu-loopback-tests** at 1-minute intervals a maximum of 5 times.
1005	ABORT	DS1 Board Loopback Test cannot be executed in the current configuration. To run this Test, the TN767E or later suffix DS1 must be administered for 24-channel operation. The `Bit Rate` field on the DS1 circuit pack administration form must be set to **1.544** for 24-channel operation.
1015	ABORT	Ports on the DS1 Interface circuit pack have not been busied out to out-of-service. 1. Enter **busyout board PCSS** to put all trunks or ports of the DS1 Interface circuit pack into the out-of-service state. 2. Retry the command.

Continued on next page

Table 3-150. TEST #1209 DS1 Board Loopback Test — *Continued*

Error Code	Test Result	Description/ Recommendation
1039	ABORT	The DS1 Interface circuit pack is providing timing for the system. Executing this test could cause major system disruption. If the DS1 Interface circuit pack needs to be tested, set the synchronization reference to another DS1 Interface circuit pack or to the Tone-Clock circuit pack via the following command sequence: 1. Issue the **disable synchronization-switch** command. 2. Next, issue the **set synchronization PCSS** command. 3. Lastly, issue the **enable synchronization-switch** command.
1950	ABORT	Another loopback/span test is already executing on the DS1 board or the board is in a network requested loopback mode (Line loopback or Payload loopback). The hardware error log will indicate whether a Customer Loopback Jack Test, Far CSU Loopback Test, or the One-Way Span Test is executing or if the board is in line loopback or payload loopback mode. Only one long-duration loopback/span test can be active at a given time. Thus, if a loopback/span test is already active, that test must be terminated via the *test ds1-loop PCSS end-loopback/span-test* command in order to execute this test.
	ABORT	Internal system error
2100	ABORT	Could not allocate the necessary system resources to run this test. 1. Retry the command at 1-minute intervals for a maximum of 5 times.

Continued on next page

Table 3-150. TEST #1209 DS1 Board Loopback Test — *Continued*

Error Code	Test Result	Description/ Recommendation
2000	ABORT	Response to the test was not received within the allowable time period. This may be due to hyperactivity. Error type 1538 in the error log indicates hyperactivity. The hyperactive circuit pack is out of service and one or more of the following symptoms may be exhibited. 1. The DS1-BD tests (such as test 138 and test 139) are aborting with error code 2000. 2. The tests run on the ports of this circuit pack are returning a no board result. 3. A **busyout** or a **release** command has no affect on the test results. 4. A **list config** command shows that the circuit pack and the ports are properly installed. **NOTE:** When hyperactivity occurs, the circuit pack is isolated from the system, and all of the trunks for this circuit pack are placed into the out of service state. The system will try to restore the circuit pack within 15 minutes. When no faults are detected for 15 minutes, the DS1 interface circuit pack is restored to normal operation. All of the trunks for the DS1 interface circuit pack are then returned to the in service state. Hyperactivity is often caused by the associated facility. In such a case, faults (such as slips, misframes, or blue alarms) would be entered in the error log. In addition, many hardware errors would be logged against the associated trunk circuits. If the facility is OK and the error occurs again after 15 minutes, replace the circuit pack.
	FAIL	DS1 Interface circuit pack failed the DS1 Board Loopback Test. 1. Retry **test ds1-loop PCSS ds1/csu-loopback-tests**. 2. If the BLB test continues to fail, then replace the DS1 circuit pack.
	PASS	The BLB test executed successfully. The test pattern was transmitted and received successfully up to the TN767E DS1 board edge.

Continued on next page

Table 3-150. TEST #1209 DS1 Board Loopback Test — *Continued*

Error Code	Test Result	Description/ Recommendation
0	NO BOARD	The test could not relate the internal ID to the port (no board). This could be due to incorrect translations, no board is inserted, an incorrect board is inserted, or an insane board is inserted. 1. Check to ensure that the board translations are correct. Use the **add ds1 PCSS** command to administer the DS1 interface if it is not already administered. 2. If board was already administered correctly, check the error log to determine if the board is hyperactive. If this is the case, the board is shut down. Reseating the board will re-initialize the board. 3. If the board was found to be correctly inserted in step 1, issue the **busyout board** command. 4. Issue the **reset board** command. 5. Issue the **release busy board** command. 6. Issue the **test board long** command. This should re-establish the link between the internal ID and the port.

CSU Equipment Loopback Test (#1210)

This test is destructive.

The CSU Equipment Loopback (ELB) Test causes a loopback at the near-edge of the local 120A CSU Module and tests the connection from the TN767E DS1 board to the CSU Module (DS1 board edge interconnecting cable, and CSU Module edge). This test will only be performed if the 120A CSU Module is present, administered, and connected to a 1.544Mbps TN767E DS1 circuit pack on the back of the port carrier.

The test is destructive and can only be initiated by a system technician demanded **test ds1-loop PCSS ds1/csu-loopback-tests** command.

All trunks or ports on the DS1 Interface circuit pack must be busied out via the system technician **busyout board** command before running the ELB Test.

When the ELB Test is initiated, maintenance software sends an appropriate message to the TN767E DS1 Interface circuit pack to start the test. The board sets up the ELB loopback, transmit a test pattern, and verify that the pattern is received unaltered through the loopback. If the transmitted and received pattern is different, the test fails.

In addition, the DS1 circuit pack hardware applies a DC current while the test is running in order to detect any broken wires which may not be detected by the loopback pattern.

When the test is complete, all trunks or ports on the TN767E DS1 Interface circuit pack are restored to the in-service state after the **release board** command is entered.

Table 3-151. TEST #1210 CSU Equipment Loopback Test

Error Code	Test Result	Description/ Recommendation
	ABORT	Internal system error 1. Retry ***test ds1-loop PCSS ds1/csu-loopback-tests*** at 1-minute intervals a maximum of 5 times.
1005	ABORT	CSU Equipment Loopback Test cannot be executed in the current configuration. To run this test, the `Near-End CSU Type` field on the DS1 circuit pack administration form must be set to **integrated** and the `Bit Rate` field must be set to **1.544** (24-channel operation). 1. Use the **change ds1 PCSS** command to set the `Near-End CSU Type` field on the DS1 circuit pack administration form to **integrated**, and/or change the `Bit Rate` field to **1.544** if the board is to be used in the 24-channel configuration. 2. Retry **test ds1-loop PCSS ds1/csu-loopback-tests**.
1015	ABORT	Ports on the DS1 Interface circuit pack have not been busied out to out-of-service. 1. Enter the **busyout board PCSS** command to put all trunks or ports of the DS1 Interface circuit pack into the out-of-service state. 2. Retry the command.
1039	ABORT	The DS1 Interface circuit pack is providing timing for the system. Executing this test could cause major system disruption. If the DS1 Interface circuit pack needs to be tested, set the synchronization reference to another DS1 Interface circuit pack or to the Tone-Clock circuit pack via the following command sequence: 1. Issue the **disable synchronization-switch** command. 2. Next, issue the **set synchronization PCSS** command. 3. Lastly, issue the **enable synchronization-switch** command.

Continued on next page

Table 3-151. TEST #1210 CSU Equipment Loopback Test — *Continued*

Error Code	Test Result	Description/ Recommendation
1950	ABORT	Another loopback/span test is already executing on the DS1 board or the board is in a network requested loopback mode (Line loopback or Payload loopback). The hardware error log will indicate whether a Customer Loopback Jack Test, Far CSU Loopback Test, or the One-Way Span Test is executing or if the board is in line loopback or payload loopback mode. Only one long-duration loopback/span test can be active at a given time. Thus, if a loopback/span test is already active, that test must be terminated via the **test ds1-loop PCSS end-loopback/span-test** command in order to execute this test.
1951	ABORT	The CSU Equipment Loopback Test could not be executed because the 120A CSU Module was not physically installed. Physically connect the 120A CSU Module to the TN767E board on the back of the port carrier.
	ABORT	Internal system error
2100	ABORT	Could not allocate the necessary system resources to run this test. 1. Retry the command at 1-minute intervals a maximum of 5 times.
2000	ABORT	Response to the test was not received within the allowable time period. This may be due to hyperactivity. Error type 1538 in the error log indicates hyperactivity. The hyperactive circuit pack is out of service and one or more of the following symptoms may be exhibited. 1. The DS1-BD tests (such as test 138 and test 139) are aborting with error code 2000. 2. The tests run on the ports of this circuit pack are returning a no board result. 3. A **busyout** or a **release** command has no affect on the test results. 4. A **list config** command shows that the circuit pack and the ports are properly installed. **NOTE:** When hyperactivity occurs, the circuit pack is isolated from the system, and all of the trunks for this circuit pack are placed into the out of service state. The system will try to restore the circuit pack within 15 minutes. When no faults are detected for 15 minutes, the DS1 interface circuit pack is restored to normal operation. All of the trunks for the DS1 interface circuit pack are then returned to the in service state. Hyperactivity is often caused by the associated facility. In such a case, faults (such as slips, misframes, or blue alarms) would be entered in the error log. In addition, many hardware errors would be logged against the associated trunk circuits. If the facility is OK and the error occurs again after 15 minutes, replace the circuit pack.

Continued on next page

Table 3-151. TEST #1210 CSU Equipment Loopback Test — *Continued*

Error Code	Test Result	Description/ Recommendation
	FAIL	DS1 Interface circuit pack failed the CSU Equipment Loopback Test. 1. Retry **test ds1-loop PCSS ds1/csu-loopback-tests**. 2. If the ELB test continues to fail, then either the TN767E board, the CSU Module, or the I/O cable between the backplane and the CSU module (or any combination thereof) has failed. Attempt to isolate the problem to one of these areas. Replace the CSU Module and running **test ds1-loop PCSS ds1/csu-loopback-tests** again. 3. If the ELB test continues to fail, then replace the TN767E board and run **test ds1-loop PCSS ds1/csu-loopback-tests** again. 4. If the ELB test continues to fail, the problem could be in the I/O cable between the backplane and the CSU module.
	PASS	The ELB test executed successfully. The test pattern was transmitted and received successfully over the connection from the TN767E DS1 board to the near-edge of the 120A CSU Module.
0	NO BOARD	The test could not relate the internal ID to the port (no board). This could be due to incorrect translations, no board is inserted, an incorrect board is inserted, or an insane board is inserted. 1. Check to ensure that the board translations are correct. Use the **add ds1 PCSS** command to administer the DS1 interface if it is not already administered. 2. If board was already administered correctly, check the error log to determine if the board is hyperactive. If this is the case, the board is shut down. Reseating the board will re-initialize the board. 3. If the board was found to be correctly inserted in step 1, issue the **busyout board** command. 4. Issue the **reset board** command. 5. Issue the **release busy board** command. 6. Issue the **test board long** command. This should re-establish the link between the internal ID and the port.

CSU Repeater Loopback Test (#1211)

This test is destructive.

The CSU Repeater Loopback (RLB) Test causes a loopback at the far-edge of the local 120A CSU Module and tests the connection from the TN767E DS1 board to and including the CSU Module circuitry. This test will only be performed

if the 120A CSU Module is present, administered, and connected to a 1.544 Mbps TN767E DS1 circuit pack on the back of the port carrier.

The test is destructive and can only be initiated by a system technician demanded **test ds1-loop PCSS ds1/csu-loopback-tests** command.

All trunks or ports on the DS1 Interface circuit pack must be busied out via the system technician **busyout board** command before running the RLB Test.

When the RLB Test is initiated, maintenance software sends an appropriate message to the TN767E DS1 Interface circuit pack to start the test. The board will set up the RLB loopback, transmit a test pattern, and verify that the pattern is received unaltered through the loopback. If the transmitted and received pattern is different, the test fails.

In addition, the DS1 circuit pack hardware applies a DC current while the test is running in order to detect any broken wires which may not be detected by the loopback pattern.

When the test is complete, all trunks or ports on the TN767E DS1 Interface circuit pack are restored to the in-service state after the **release board** command is entered

Table 3-152. TEST #1211 CSU Repeater Loopback Test

Error Code	Test Result	Description/ Recommendation
	ABORT	Internal system error 1. Retry **test ds1-loop PCSS ds1/csu-loopback-tests** at 1-minute intervals a maximum of 5 times.
1005	ABORT	CSU Equipment Loopback Test cannot be executed in the current configuration. To run this test, the `Near-End CSU Type` field on the DS1 circuit pack administration form must be set to **integrated** and the `Bit Rate` field must be set to **1.544** (24-channel operation). 1. Use the **change ds1 PCSS** command to set the `Near-End CSU Type` field on the DS1 circuit pack administration form to **integrated**, and/or change the `Bit Rate` field to **1.544** if the board is to be used in the 24-channel configuration. 2. Retry **test ds1-loop PCSS ds1/csu-loopback-tests**.
1015	ABORT	Ports on the DS1 Interface circuit pack have not been busied out to out-of-service. 1. Enter the **busyout board PCSS** command to put all trunks or ports of the DS1 Interface circuit pack into the out-of-service state. 2. Retry the command.

Continued on next page

Table 3-152. TEST #1211 CSU Repeater Loopback Test — *Continued*

Error Code	Test Result	Description/ Recommendation
1039	ABORT	The DS1 Interface circuit pack is providing timing for the system. Executing this test could cause major system disruption. If the DS1 Interface circuit pack needs to be tested, set the synchronization reference to another DS1 Interface circuit pack or to the Tone-Clock circuit pack via the following command sequence: 1. Issue the **disable synchronization-switch** command. 2. Next, issue the **set synchronization PCSS** command. 3. Lastly, issue the **enable synchronization-switch** command.
1950	ABORT	Another loopback/span test is already executing on the DS1 board or the board is in a network requested loopback mode (Line loopback or Payload loopback). The hardware error log indicates whether a Customer Loopback Jack Test, Far CSU Loopback Test, or the One-Way Span Test is executing or if the board is in line loopback or payload loopback mode. Only one long-duration loopback/span test can be active at a given time. Thus, if a loopback/span test is already active, that test must be terminated via the **test ds1-loop PCSS end-loopback/span-test** command in order to execute this test.
1951	ABORT	The CSU Repeater Loopback Test could not be executed because the 120A CSU Module was not physically installed. Physically connect the 120A CSU Module to the TN767E board on the back of the port carrier.

Continued on next page

Table 3-152. TEST #1211 CSU Repeater Loopback Test — *Continued*

Error Code	Test Result	Description/ Recommendation
	ABORT	Internal system error
2100	ABORT	Could not allocate the necessary system resources to run this test. 1. Retry the command at 1-minute intervals a maximum of 5 times.
2000	ABORT	Response to the test was not received within the allowable time period. This may be due to hyperactivity. Error type 1538 in the error log indicates hyperactivity. The hyperactive circuit pack is out of service and one or more of the following symptoms may be exhibited. 1. The DS1-BD tests (such as test 138 and test 139) are aborting with error code 2000. 2. The tests run on the ports of this circuit pack are returning a no board result. 3. A **busyout** or a **release** command has no affect on the test results. 4. A **list config** command shows that the circuit pack and the ports are properly installed. **NOTE:** When hyperactivity occurs, the circuit pack is isolated from the system, and all of the trunks for this circuit pack are placed into the out of service state. The system will try to restore the circuit pack within 15 minutes. When no faults are detected for 15 minutes, the DS1 interface circuit pack is restored to normal operation. All of the trunks for the DS1 interface circuit pack are then returned to the in service state. Hyperactivity is often caused by the associated facility. In such a case, faults (such as slips, misframes, or blue alarms) would be entered in the error log. In addition, many hardware errors would be logged against the associated trunk circuits. If the facility is OK and the error occurs again after 15 minutes, replace the circuit pack.
	FAIL	DS1 Interface circuit pack failed the CSU Repeater Loopback Test. 1. Retry **test ds1-loop PCSS ds1/csu-loopback-tests**. 2. If the RLB test continues to fail, and the CSU Equipment Loopback Test (#1210) passed, then replace the CSU Module.
	PASS	The RLB test executed successfully. The test pattern was transmitted and received successfully over the connection from the TN767E DS1 board to the far-edge of the 120A CSU Module.

Continued on next page

Table 3-152. TEST #1211 CSU Repeater Loopback Test — *Continued*

Error Code	Test Result	Description/ Recommendation
0	NO BOARD	The test could not relate the internal ID to the port (no board). This could be due to incorrect translations, no board is inserted, an incorrect board is inserted, or an insane board is inserted. 1. Check to ensure that the board translations are correct. Use the **add ds1 PCSS** command to administer the DS1 interface if it is not already administered. 2. If board was already administered correctly, check the error log to determine if the board is hyperactive. If this is the case, the board is shut down. Reseating the board will re-initialize the board. 3. If the board was found to be correctly inserted in step 1, issue the **busyout board** command. 4. Issue the **reset board** command. 5. Issue the **release busy board** command. 6. Issue the **test board long** command. This should re-establish the link between the internal ID and the port.

CPE Loopback Jack Test (#1212)

This test is destructive.

The CPE Loopback Jack (CLJ-LB) Test causes a loopback at the CPE Loopback Jack and tests the building wiring connection between the TN767E DS1 board and the CPE Loopback Jack.

The test is highly destructive and can only be initiated by a system technician demanded **test ds1-loop PCSS cpe-loopback-jack-test-begin [number-of-bits bit-pattern]** command. The System technician has the choice of entering a loopback activation code on the command line or using the default code (0x47F).

All trunks or ports on the DS1 Interface circuit pack must be busied out via the system technician **busyout board** command before running the CPE Loopback Jack Test.

The CPE Loopback Jack Test has the TN767E DS1 Interface circuit pack transmit a loopback activation code to the CPE Loopback Jack, waits up to 10 seconds for return of the code to verify the loopback has been established, transmits a framed 3-in-24 test pattern, begins counting bit errors in the received test pattern, and returns a PASS result to indicate that the pattern was successfully

sent. If the loopback is not established within the 10 seconds, the test returns FAIL.

The status of the CPE Loopback Jack test will be available in the hardware error log via error type 3900. Several distinct aux values will be used to give the user information of the status of the test.

The **list measurements ds1 summar**y command will display the length of time the test has been running (*Test Duration* field) and number of bit errors detected (*Loopback/Span Test Bit-Error Count* field). If the test pattern is being passed through the loopback cleanly, the number of bit errors should be very low. The command will also display the type of loopback/span test executing (*Test* field), the type of pattern generated for the loopback/span test (*Pattern* field), and whether the pattern (*3-in-24 Pattern*) is synchronized (*Synchronized Field*).

To terminate the test, enter **test ds1-loop PCSS end-loopback/span-test** command or the **release board**. Using the **release board** command restores all trunks or ports on the TN767E DS1 Interface circuit pack to the in-service state.

Table 3-153. TEST #1212 CPE Loopback Jack Test

Error Code	Test Result	Description/ Recommendation
	ABORT	Internal system error 1. Retry **test ds1-loop PCSS cpe-loopback-jack-test-begin** at 1-minute intervals a maximum of 5 times.
1005	ABORT	CPE Loopback Jack Test cannot be executed in the current configuration. To run this Test, the TN767E or later suffix DS1 must be administered for 24-channel operation. The `Bit Rate` field on the DS1 circuit pack administration form must be set to **1.544** for 24-channel operation.
1015	ABORT	Ports on the DS1 Interface circuit pack have not been busied out to out-of-service. 1. Enter the **busyout board PCSS** command to put all trunks or ports of the DS1 Interface circuit pack into the out-of-service state. 2. Retry the command.
1039	ABORT	The DS1 Interface circuit pack is providing timing for the system. Executing this test could cause major system disruption. If the DS1 Interface circuit pack needs to be tested, set the synchronization reference to another DS1 Interface circuit pack or to the Tone-Clock circuit pack via the following command sequence: 1. Issue the **disable synchronization-switch** command. 2. Next, issue the **set synchronization PCSS** command. 3. Lastly, issue the **enable synchronization-switch** command.

Continued on next page

Table 3-153. TEST #1212 CPE Loopback Jack Test — *Continued*

Error Code	Test Result	Description/ Recommendation
1950	ABORT	Another loopback/span test is already executing on the DS1 board or the board is in a network requested loopback mode (Line loopback or Payload loopback). The hardware error log will indicate whether a Customer Loopback Jack Test, Far CSU Loopback Test, or the One-Way Span Test is executing or if the board is in line loopback or payload loopback mode. Only one long-duration loopback/span test can be active at a given time. Thus, if a loopback/span test is already active, that test must be terminated via the **test ds1-loop PCSS end-loopback/span-test** command in order to execute this test.
	ABORT	Internal system error
2100	ABORT	Could not allocate the necessary system resources to run this test. 1. Retry the command at 1-minute intervals for a maximum of 5 times.
2000	ABORT	Response to the test was not received within the allowable time period. This may be due to hyperactivity. Error type 1538 in the error log indicates hyperactivity. The hyperactive circuit pack is out of service and one or more of the following symptoms may be exhibited. 1. The DS1-BD tests (such as test 138 and test 139) are aborting with error code 2000. 2. The tests run on the ports of this circuit pack are returning a no board result. 3. A **busyout** or a **release** command has no affect on the test results. 4. A **list config** command shows that the circuit pack and the ports are properly installed. **NOTE:** When hyperactivity occurs, the circuit pack is isolated from the system, and all of the trunks for this circuit pack are placed into the out of service state. The system will try to restore the circuit pack within 15 minutes. When no faults are detected for 15 minutes, the DS1 interface circuit pack is restored to normal operation. All of the trunks for the DS1 interface circuit pack are then returned to the in service state. Hyperactivity is often caused by the associated facility. In such a case, faults (such as slips, misframes, or blue alarms) would be entered in the error log. In addition, many hardware errors would be logged against the associated trunk circuits. If the facility is OK and the error occurs again after 15 minutes, replace the circuit pack.

Continued on next page

Table 3-153. TEST #1212 CPE Loopback Jack Test — *Continued*

Error Code	Test Result	Description/ Recommendation
2	FAIL	The CLJ-LB test failed because it was not set up properly. The DS1 interface pack could not successfully put the CPE loopback jack into loopback mode. 1. Rerun the **test ds1-loop PCSS cpe-loopback-jack-test-begin** command. 2. If the test continues to fail, the problem could be with the TN767E board, the CPE loopback jack equipment, or somewhere between. Run the **test ds1-loop PCSS ds1/csu-loopback-tests** command to determine if the loopback tests that are closer to the TN767E board are successful. If any of these tests fail, follow the maintenance strategy that is associated with the test that fails.
3	FAIL	The CPE Loopback Jack Test was not set up properly. The framed 3-in-24 test pattern, generated by the DS1 Interface circuit pack and looped back through the CPE Loopback Jack, could not be detected properly by the DS1 circuit pack. 1. Retry ***t*est ds1-loop PCSS cpe-loopback-jack-test-begin**. 2. If the CPE Loopback test continues to fail, the problem could be with the TN767E board, the CPE Loopback Jack equipment, or somewhere in between. Run **test ds1-loop PCSS ds1/csu-loopback-tests** to see if the loopback tests closer to the TN767E board are successful. If any of those loopback tests fail, follow the maintenance strategy associated with those loopbacks.
	PASS	The CPE Loopback Jack test has successfully began executing. The test will continue to run until the system technician enters the ***t*est ds1-loop PCSS end-loopback/span-test** command or the **release board PCSS** command.
0	NO BOARD	The test could not relate the internal ID to the port (no board). This could be due to incorrect translations, no board is inserted, an incorrect board is inserted, or an insane board is inserted. 1. Check to ensure that the board translations are correct. Use the **add ds1 PCSS** command to administer the DS1 interface if it is not already administered. 2. If board was already administered correctly, check the error log to determine if the board is hyperactive. If this is the case, the board is shut down. Reseating the board will re-initialize the board. 3. If the board was found to be correctly inserted in step 1, issue the **busyout board** command. 4. Issue the **reset board** command. 5. Issue the **release busy board** command. 6. Issue the **test board long** command. This should re-establish the link between the internal ID and the port.

Far CSU Loopback Test (#1213)

This test is destructive.

The Far CSU Loopback (R-LLB) Test causes a loopback at the far-end CSU and tests all circuitry and facilities from the local TN767E DS1 board to the far-end CSU.

The test is destructive and can only be initiated by a system technician demanded **test ds1-loop PCSS far-csu-loopback-test-begin** command.

All trunks or ports on the DS1 Interface circuit pack must be busied out via the system technician **busyout board** command before running the Far CSU Loopback Test.

If the far-end CSU is not a 120A CSU Module, and the DS1 is administered for ami-zcs line coding, one's density protection must be disabled on the CSU during the test due to the large number of zero's in the 3-in-24 test pattern.

The Far CSU Loopback Test has the TN767E DS1 Interface circuit pack transmit a loopback activation code to the remote CSU, waits up to 15 seconds for return of the code to verify the loopback has been established, transmits a framed 3-in-24 test pattern, begins counting bit errors in the received test pattern, and returns a PASS result. If the loopback is not established within the 15 seconds, the test fails.

The status of the Far CSU Loopback test will be available in the hardware error log via error type 3901. Several distinct aux values will be used to give the user information of the status of the test.

The *list measurements ds1 summary* command will display the length of time the test has been running (*Test Duration* field) and number of bit errors detected (*Loopback/Span Test Bit-Error Count* field). If the test pattern is being passed through the loopback cleanly, the number of bit errors should be very low. The command will also display the type of loopback/span test executing (*Test* field), the type of pattern generated for the loopback/span test (*Pattern* field), and whether the pattern (*i.e. 3-in-24 Pattern*) is synchronized (*Synchronized* field).

To terminate the test, enter *t***est ds1-loop PCSS end-loopback/span-test** or the **release board** command. Using the **release board** command will restore all trunks or ports on the TN767E DS1 Interface circuit pack to the in-service state.

Table 3-154. TEST #1213 Far CSU Loopback Test

Error Code	Test Result	Description/ Recommendation
	ABORT	Internal system error 1. Retry ***test* ds1-loop PCSS far-csu-loopback-test-begin** at 1-minute intervals a maximum of 5 times.
1005	ABORT	Far CSU Loopback Test cannot be executed in the current configuration. To run this, the TN767E or later suffix DS1 must be administered for 24-channel operation. The "Bit Rate" field on the DS1 circuit pack administration form must be set to "1.544" for 24-channel operation.
1015	ABORT	Ports on the DS1 Interface circuit pack have not been busied out to out-of-service. 1. Enter the **busyout board PCSS** command to put all trunks or ports of the DS1 Interface circuit pack into the out-of-service state. 2. Retry the command.
1039	ABORT	The DS1 Interface circuit pack is providing timing for the system. Executing this test could cause major system disruption. If the DS1 Interface circuit pack needs to be tested, set the synchronization reference to another DS1 Interface circuit pack or to the Tone-Clock circuit pack via the following command sequence: 1. Issue the **disable synchronization-switch** command. 2. Next, issue the **set synchronization PCSS** command. 3. Lastly, issue the **enable synchronization-switch** command.
1950	ABORT	Another loopback/span test is already executing on the DS1 board or the board is in a network requested loopback mode (Line loopback or Payload loopback). The hardware error log will indicate whether a Customer Loopback Jack Test, Far CSU Loopback Test, or the One-Way Span Test is executing or if the board is in line loopback or payload loopback mode. Only one long-duration loopback/span test can be active at a given time. Thus, if a loopback/span test is already active, that test must be terminated via the **test ds1-loop PCSS end-loopback/span-test** command in order to execute this test.
	ABORT	Internal system error
2100	ABORT	Could not allocate the necessary system resources to run this test. 1. Retry the command at 1-minute intervals for a maximum of 5 times.

Continued on next page

Table 3-154. TEST #1213 Far CSU Loopback Test — *Continued*

Error Code	Test Result	Description/ Recommendation
2000	ABORT	Response to the test was not received within the allowable time period. This may be due to hyperactivity. Error type 1538 in the error log indicates hyperactivity. The hyperactive circuit pack is out of service and one or more of the following symptoms may be exhibited. 1. The DS1-BD tests (such as test 138 and test 139) are aborting with error code 2000. 2. The tests run on the ports of this circuit pack are returning a no board result. 3. A **busyout** or a **release** command has no affect on the test results. 4. A **list config** command shows that the circuit pack and the ports are properly installed. **NOTE:** When hyperactivity occurs, the circuit pack is isolated from the system, and all of the trunks for this circuit pack are placed into the out of service state. The system will try to restore the circuit pack within 15 minutes. When no faults are detected for 15 minutes, the DS1 interface circuit pack is restored to normal operation. All of the trunks for the DS1 interface circuit pack are then returned to the in service state. Hyperactivity is often caused by the associated facility. In such a case, faults (such as slips, misframes, or blue alarms) would be entered in the error log. In addition, many hardware errors would be logged against the associated trunk circuits. If the facility is OK and the error occurs again after 15 minutes, replace the circuit pack.

Continued on next page

Table 3-154. TEST #1213 Far CSU Loopback Test — *Continued*

Error Code	Test Result	Description/ Recommendation
2	FAIL	The far CSU Loopback Test was not set up properly. The DS1 Interface circuit pack could not put the far-end CSU into loopback mode.
3	FAIL	The far CSU Loopback Test was not set up properly. The framed 3-in-24 test pattern, generated by the DS1 Interface circuit pack and looped back through the far-end CSU, could not be detected by the DS1 circuit pack. 1. Retry *t***est ds1-loop PCSS far-csu-loopback-test-begin**. 2. If the Far CSU Loopback test continues to fail with this error code, the problem could be with the TN767E board, the far-end CSU equipment, or somewhere in between. Run **test ds1-loop PCSS cpe-loopback-jack-test-begin** to see if the CPE Loopback Jack test which is closer to the TN767E board is successful. (If a CPE Loopback Jack device is not being used, then run **test ds1-loop PCSS ds1/csu-loopback-tests** to see if these even closer loopback tests succeed). If the closer loopback test fails, follow the maintenance strategy associated with that loopback
	PASS	The Far CSU Loopback test has successfully began executing. The test will continue to run until the system technician enters **test ds1-loop PCSS end-loopback/span-test** or the **release board PCSS**.
0	NO BOARD	The test could not relate the internal ID to the port (no board). This could be due to incorrect translations, no board is inserted, an incorrect board is inserted, or an insane board is inserted. 1. Check to ensure that the board translations are correct. Use the **add ds1 PCSS** command to administer the DS1 interface if it is not already administered. 2. If board was already administered correctly, check the error log to determine if the board is hyperactive. If this is the case, the board is shut down. Reseating the board will re-initialize the board. 3. If the board was found to be correctly inserted in step 1, issue the **busyout board** command. 4. Issue the **reset board** command. 5. Issue the **release busy board** command. 6. Issue the **test board long** command. This should re-establish the link between the internal ID and the port.

One-Way Span Test (#1214)

This test is destructive.

The One-Way Span Test allows one-way span testing to and from remote test equipment or another DEFINITY communications system. This will test all circuitry and facilities from the local TN767E DS1 board to the remote test equipment or other DEFINITY communications system.

The test is destructive and can only be initiated by a system technician demanded *test ds1-loop PCSS one-way-span-test-begin* command.

All trunks or ports on the DS1 Interface circuit pack must be busied out via the system technician **busyout board** command before running the One-Way Span Test.

The One-Way Span Test has the TN767E DS1 Interface circuit pack transmit a framed 3-in-24 test pattern and attempt to receive and verify the pattern. If the TN767E board receives a framed 3-in-24 test pattern sent from another DEFINITY G3V3 or test equipment at the far-end of the DS1, it will begin counting bit errors within the received pattern.

The status of the One-Way Span test will be available in the hardware error log via error type 3902. Several distinct aux values will be used to give the user information of the status of the test.

The *list measurements ds1 summary* command will display the length of time the test has been running (*Test Duration* field) and number of bit errors detected (*Loopback/Span Test Bit-Error Count* field). If the test pattern is being sent cleanly over the span from the far-end, the number of bit errors should be very low. The *Test Duration* field will show *0* until the test pattern is received from the far-end. Upon receiving the test pattern, the board will begin calculating the test duration and number of bit errors. The command will also display the type of loopback/span test executing (*Test* field), the type of pattern generated for the loopback/span test (*Pattern* field), and whether the pattern (*i.e. 3-in-24 Pattern*) is synchronized (*Synchronized* field).

To terminate the test, enter the **test ds1-loop PCSS end-loopback/span-test** command or the **release board** command. Using the **release board** command will restore all trunks or ports on the TN767E DS1 Interface circuit pack to the in-service state.

Table 3-155. TEST #1214 One-Way Span Test

Error Code	Test Result	Description/ Recommendation
	ABORT	Internal system error 1. Retry the **test ds1-loop PCSS one-way-span-test-begin** command at 1-minute intervals a maximum of 5 times.

Continued on next page

Table 3-155. TEST #1214 One-Way Span Test — *Continued*

Error Code	Test Result	Description/ Recommendation
1005	ABORT	One-Way Span Test cannot be executed in the current configuration. To run this, the TN767E or later suffix DS1 must be administered for 24-channel operation. The `Bit Rate` field on the DS1 circuit pack administration form must be set to **1.544** for 24-channel operation.
1015	ABORT	Ports on the DS1 Interface circuit pack have not been busied out to out-of-service. 1. Enter the **busyout board PCSS** command to put all trunks or ports of the DS1 Interface circuit pack into the out-of-service state. 2. Retry the command.
1039	ABORT	The DS1 Interface circuit pack is providing timing for the system. Executing this test could cause major system disruption. If the DS1 Interface circuit pack needs to be tested, set the synchronization reference to another DS1 Interface circuit pack or to the Tone-Clock circuit pack via the following command sequence: 1. Issue the **disable synchronization-switch** command. 2. Next, issue the **set synchronization PCSS** command. 3. Lastly, issue the **enable synchronization-switch** command.
1950	ABORT	Another loopback/span test is already executing on the DS1 board or the board is in a network requested loopback mode (Line loopback or Payload loopback). The hardware error log will indicate whether a Customer Loopback Jack Test, Far CSU Loopback Test, or the One-Way Span Test is executing or if the board is in line loopback or payload loopback mode. Only one long-duration loopback/span test can be active at a given time. Thus, if a loopback/span test is already active, that test must be terminated via the **test ds1-loop PCSS end-loopback/span-test** command in order to execute this test.
	ABORT	Internal system error
2100	ABORT	Could not allocate the necessary system resources to run this test. 1. Retry the command at 1-minute intervals for a maximum of 5 times.

Continued on next page

Table 3-155. TEST #1214 One-Way Span Test — *Continued*

Error Code	Test Result	Description/ Recommendation
2000	ABORT	Response to the test was not received within the allowable time period. This may be due to hyperactivity. Error type 1538 in the error log indicates hyperactivity. The hyperactive circuit pack is out of service and one or more of the following symptoms may be exhibited. 1. The DS1-BD tests (such as test 138 and test 139) are aborting with error code 2000. 2. The tests run on the ports of this circuit pack are returning a no board result. 3. A **busyout** or a **release** command has no affect on the test results. 4. A **list config** command shows that the circuit pack and the ports are properly installed. **NOTE:** When hyperactivity occurs, the circuit pack is isolated from the system, and all of the trunks for this circuit pack are placed into the out of service state. The system will try to restore the circuit pack within 15 minutes. When no faults are detected for 15 minutes, the DS1 interface circuit pack is restored to normal operation. All of the trunks for the DS1 interface circuit pack are then returned to the in service state. Hyperactivity is often caused by the associated facility. In such a case, faults (such as slips, misframes, or blue alarms) would be entered in the error log. In addition, many hardware errors would be logged against the associated trunk circuits. If the facility is OK and the error occurs again after 15 minutes, replace the circuit pack.
	PASS	The One-Way Span test has successfully began transmitting a framed 3-in-24 test pattern. The test will continue to run until the system technician enters the **test ds1-loop PCSS end-loopback/span-test** command or the **release board PCSS** command.

Continued on next page

Table 3-155. TEST #1214 One-Way Span Test — *Continued*

Error Code	Test Result	Description/ Recommendation
0	NO BOARD	The test could not relate the internal ID to the port (no board). This could be due to incorrect translations, no board is inserted, an incorrect board is inserted, or an insane board is inserted. 1. Check to ensure that the board translations are correct. Use the **add ds1 PCSS** command to administer the DS1 interface if it is not already administered. 2. If board was already administered correctly, check the error log to determine if the board is hyperactive. If this is the case, the board is shut down. Reseating the board will re-initialize the board. 3. If the board was found to be correctly inserted in step 1, issue the **busyout board** command. 4. Issue the **reset board** command. 5. Issue the **release busy board** command. 6. Issue the **test board long** command. This should re-establish the link between the internal ID and the port.

Inject Single Bit Error Test (#1215)

This test is destructive.

The Inject Single Bit Error Test causes a single bit error to be sent within an active framed 3-in-24 test pattern.

The test is highly destructive and can only be initiated by a system technician demanded **test ds1-loop PCSS inject-single-bit-error** command. An attempt to use this command will be rejected if none of the three long-duration DS1 loopback/span tests (CPE Loopback Jack Test, Far CSU Loopback Test, One-Way Span Test) are active on a TN767E circuit pack.

All trunks or ports on the DS1 Interface circuit pack must be busied out via the system technician **busyout board** command before running the Inject Single Bit Error Test.

The **list measurements ds1 summary** command displays the number of bit errors detected (`Loopback/Span Test Bit-Error Count` field). Injecting this single bit error should increment the bit error count of the loopback/span test by one.

Table 3-156. TEST #1215 Inject Single Bit Error Test

Error Code	Test Result	Description/ Recommendation
	ABORT	Internal system error 1. Retry the `test ds1-loop PCSS inject-single-bit-error` command at 1-minute intervals a maximum of 5 times.
1015	ABORT	Ports on the DS1 Interface circuit pack have not been busied out to out-of-service. 1. Enter the **busyout board PCSS** command to put all trunks or ports of the DS1 Interface circuit pack into the out-of-service state. 2. Retry the command.
	ABORT	Internal system error
2100	ABORT	Could not allocate the necessary system resources to run this test. 1. Retry the command at 1-minute intervals for a maximum of 5 times.
2000	ABORT	Response to the test was not received within the allowable time period. This may be due to hyperactivity. Error type 1538 in the error log indicates hyperactivity. The hyperactive circuit pack is out of service and one or more of the following symptoms may be exhibited. 1. The DS1-BD tests (such as test 138 and test 139) are aborting with error code 2000. 2. The tests run on the ports of this circuit pack are returning a no board result. 3. A **busyout** or a **release** command has no affect on the test results. 4. A **list config** command shows that the circuit pack and the ports are properly installed. **NOTE:** When hyperactivity occurs, the circuit pack is isolated from the system, and all of the trunks for this circuit pack are placed into the out of service state. The system will try to restore the circuit pack within 15 minutes. When no faults are detected for 15 minutes, the DS1 interface circuit pack is restored to normal operation. All of the trunks for the DS1 interface circuit pack are then returned to the in service state. Hyperactivity is often caused by the associated facility. In such a case, faults (such as slips, misframes, or blue alarms) would be entered in the error log. In addition, many hardware errors would be logged against the associated trunk circuits. If the facility is OK and the error occurs again after 15 minutes, replace the circuit pack.
	PASS	A single bit error has been successfully injected into an active framed 3-in-24 test pattern.

Continued on next page

Table 3-156. TEST #1215 Inject Single Bit Error Test — *Continued*

Error Code	Test Result	Description/ Recommendation
0	NO BOARD	The test could not relate the internal ID to the port (no board). This could be due to incorrect translations, no board is inserted, an incorrect board is inserted, or an insane board is inserted. 1. Check to ensure that the board translations are correct. Use the **add ds1 PCSS** command to administer the DS1 interface if it is not already administered. 2. If board was already administered correctly, check the error log to determine if the board is hyperactive. If this is the case, the board is shut down. Reseating the board will re-initialize the board. 3. If the board was found to be correctly inserted in step 1, issue the **busyout board** command. 4. Issue the **reset board** command. 5. Issue the **release busy board** command. 6. Issue the **test board long** command. This should re-establish the link between the internal ID and the port.

End Loopback/Span Test (#1216)

This test is destructive.

The End Loopback/Span Test terminates an active loopback or span test on a TN767E DS1 circuit pack. Bit error counting against the received test pattern stream is terminated and sending of the framed 3-in-24 test pattern is halted. If either the CPE Loopback Jack or the far-end CSU is looped, the appropriate loopback deactivate code is sent. If the loopback could not be deactivated, then the test will FAIL and a MINOR alarm will be noted in the alarm log until the loopback is cleared.

The test is highly destructive and can only be initiated by a system technician demanded **test ds1-loop PCSS end-loopback/span-test** command. Since only one of these three different long-duration loopback/span tests can be active at a time, the TN767E circuit pack knows which loopback/span test to terminate.

All trunks or ports on the DS1 Interface circuit pack must be busied out via the system technician **busyout board** command before running this End Loopback/Span Test.

The **list measurements ds1 summary** command displays the length of time the test ran (`Test Duration` field) and number of bit errors detected (`Loopback/Span Test Bit-Error Count` field).

To restore the trunks or ports on the TN767E DS1 Interface circuit pack to the in-service state, execute the **release board** command.

Table 3-157. TEST #1216 End Loopback/Span Test

Error Code	Test Result	Description/ Recommendation
	ABORT	Internal system error 1. Retry the **test ds1-loop PCSS end-loopback/span-test** command at 1-minute intervals a maximum of 5 times.
1005	ABORT	End Loopback/Span Test cannot be executed in the current configuration. To run this, the TN767E or later suffix DS1 must be administered for 24-channel operation. The `Bit Rate` field on the DS1 circuit pack administration form must be set to **1.544** for 24-channel operation.
1015	ABORT	Ports on the DS1 Interface circuit pack have not been busied out to out-of-service. 1. Enter the **busyout board PCSS** command to put all trunks or ports of the DS1 Interface circuit pack into the out-of-service state. 2. Retry the command.
	ABORT	Internal system error
2100	ABORT	Could not allocate the necessary system resources to run this test. 1. Retry the command at 1-minute intervals for a maximum of 5 times.

Continued on next page

Table 3-157. TEST #1216 End Loopback/Span Test — *Continued*

Error Code	Test Result	Description/ Recommendation
2000	ABORT	Response to the test was not received within the allowable time period. This may be due to hyperactivity. Error type 1538 in the error log indicates hyperactivity. The hyperactive circuit pack is out of service and one or more of the following symptoms may be exhibited. 1. The DS1-BD tests (such as test 138 and test 139) are aborting with error code 2000. 2. The tests run on the ports of this circuit pack are returning a no board result. 3. A **busyout** or a **release** command has no affect on the test results. 4. A **list config** command shows that the circuit pack and the ports are properly installed. **NOTE:** When hyperactivity occurs, the circuit pack is isolated from the system, and all of the trunks for this circuit pack are placed into the out of service state. The system will try to restore the circuit pack within 15 minutes. When no faults are detected for 15 minutes, the DS1 interface circuit pack is restored to normal operation. All of the trunks for the DS1 interface circuit pack are then returned to the in service state. Hyperactivity is often caused by the associated facility. In such a case, faults (such as slips, misframes, or blue alarms) would be entered in the error log. In addition, many hardware errors would be logged against the associated trunk circuits. If the facility is OK and the error occurs again after 15 minutes, replace the circuit pack.
1313	FAIL	The TN767E DS1 circuit pack could not deactivate the loopback through the Customer Loopback Jack. 1. Retry the **test ds1-loop PCSS end-loopback/span-test** command at 1-minute intervals for a maximum of 5 times.
1314	FAIL	The TN767E DS1 circuit pack could not deactivate the loopback through the far-end CSU. 1. Make sure that the far-end DS1 is installed if the far-end CSU is a 120A CSU Module. 2. Retry the command at 1-minute intervals for a maximum of 5 times.
	PASS	The active long-duration loopback or span test on the TN767E circuit pack was successfully terminated.

Continued on next page

Table 3-157. TEST #1216 End Loopback/Span Test — *Continued*

Error Code	Test Result	Description/ Recommendation
0	NO BOARD	The test could not relate the internal ID to the port (no board). This could be due to incorrect translations, no board is inserted, an incorrect board is inserted, or an insane board is inserted. 1. Check to ensure that the board translations are correct. Use the **add ds1 PCSS** command to administer the DS1 interface if it is not already administered. 2. If board was already administered correctly, check the error log to determine if the board is hyperactive. If this is the case, the board is shut down. Reseating the board will re-initialize the board. 3. If the board was found to be correctly inserted in step 1, issue the **busyout board** command. 4. Issue the **reset board** command. 5. Issue the **release busy board** command. 6. Issue the **test board long** command. This should re-establish the link between the internal ID and the port.

ICSU Status LEDs Test (#1227)

The TN767E DS1 circuit pack has four status LEDs on the faceplate in addition to the three standard faceplate LEDs. These four status LEDs are associated with the 120A Channel Service Unit (CSU) Module that can be connected to the TN767E board via the I/O connector panel on the back of the port carrier.

This test is a visual test. It will light the four status LEDs red for 5 seconds, then light them green for 5 seconds, then light them yellow for 5 seconds, then turn the LEDs off and returns control of the status LEDs to the circuit pack.

This test will only be executed on TN767E or later suffix DS1 circuit packs administered for 24-channel operation (1.544 bit rate).

If the 1201 CSU Module is not installed, the status LEDs are always off and this test aborts.

Table 3-158. TEST #1227 ICSU Status LEDs Test

Error Code	Test Result	Description/ Recommendation
	ABORT	Internal system error 1. Retry the command at 1-minute intervals a maximum of 5 times.
1005	ABORT	The ICSU Status LEDs test can not be executed for the current configuration. The test applies only to TN767E or later DS1 circuit packs administered for 24-channel operation (1.544 bit rate). 1. If the circuit pack is a TN767E or later suffix DS1 circuit pack, then retry the command.
1951	ABORT	The ICSU Status LEDs Test can not be executed because a 120A or later suffix CSU Module is not physically installed. If using a 120A CSU Module, physically connect it to the TN767E board on the back of the port carrier otherwise, ignore this abort.
2100	ABORT	Could not allocate the necessary system resources to run this test. 1. Retry the command at 1-minute intervals for a maximum of 5 times.
2500	ABORT	Internal system error. 1. Retry the command.
	PASS	The ICSU Status LEDs test executed successfully. A PASS result, however, does not necessarily mean that the status LEDs behaved properly. It only means that the software successfully attempted to light the status LEDs. This is a visual test. The service technician must visually exam the behavior of the LEDs while the test is running. The LEDs are functioning properly if the four status LEDs are lit red for 5 seconds, then lit green for 5 seconds, then lit yellow for 5 seconds. If the LEDs behave differently, the board should be replaced at the customer's convenience.

Continued on next page

Table 3-158. TEST #1227 ICSU Status LEDs Test — *Continued*

Error Code	Test Result	Description/ Recommendation
0	NO BOARD	The test could not relate the internal ID to the port (no board). This could be due to incorrect translations, no board is inserted, an incorrect board is inserted, or an insane board is inserted. 1. Check to ensure that the board translations are correct. Use the **add ds1 PCSS** command to administer the DS1 interface if it is not already administered. 2. If board was already administered correctly, check the error log to determine if the board is hyperactive. If this is the case, the board is shut down. Reseating the board will re-initialize the board. 3. If the board was found to be correctly inserted in step 1, issue the **busyout board** command. 4. Issue the **reset board** command. 5. Issue the **release busy board** command. 6. Issue the **test board long** command. This should re-establish the linkage between the internal ID and the port.

DT-LN-BD (Data Line Circuit Pack)

MO Name (in Alarm Log)	Alarm Level	Initial Command to Run[1]	Full Name of MO
DT-LN-BD	MIN	test board PCSS sh	Data Line Circuit Pack
DT-LN-BD	WRN	test board PCSS sh	Data Line Circuit Pack

1. Where P is the port network number (1 for PPN); C is the carrier designation (for example, A, B, or C); and SS is the address of the slot in the carrier where the circuit pack is located (for example, 01, 02, ..., etc.).

Refer to XXX-BD (Common Port Circuit Pack) Maintenance documentation for circuit pack level errors. See also DAT-LINE (Data Line Circuit Port) Maintenance documentation for related line information.

DTMR-PT [Dual Tone Multifrequency Port (TTR)]

MO Name (in Alarm Log)	Alarm Level	Initial Command to Run[1]	Full Name of MO
DTMR-PT	MAJOR	test port PCSSpp sh	Dual Tone Multifrequency Receiver Port (TTR)
DTMR-PT	MINOR	test port PCSSpp sh	Dual Tone Multifrequency Receiver Port (TTR)
DTMR-PT	WARNING	release port PCSSpp	Dual Tone Multifrequency Receiver Port (TTR)

1. Where P is the port network number (1 for PPN); C is the carrier designation (for example, A, B, or C); SS is the address of the slot in the carrier where the circuit pack is located (for example, 01, 02, ..., etc.); and pp is the 2-digit port number (for example, 01).

The Dual Tone Multifrequency Receiver Port (DTMR), also known as the Touch-Tone Receiver (TTR), resides on the Tone Detector circuit pack (TN748, TN420) or the TN756 Tone-Clock circuit pack. There are four Dual Tone Multifrequency Receiver (DTMR-PT) ports and two General Purpose Tone Detector (GPTD-PT) ports on a Tone Detector circuit pack. The DTMR port is used to detect touch-tone digits that are placed on the TDM bus. Examples of touch-tone digits are digits 0 through 9, #, and *. The ability of the DTMR port to detect touch-tone digits is essential for maintenance of other circuit packs (for example, Tone-Clock circuit pack) and in placing a station-to-station call. Calls originating from a hybrid station **do not** require a DTMR port.

The Dual Tone Multifrequency Receiver Port maintenance object defines a set of tests to verify that the DTMF digits detection capability of the DTMR port is functioning properly. For all Tone Detector circuit pack level errors (DETR-BD), refer to the XXX-BD (Common Port Circuit Pack) Maintenance documentation.

Hardware Error Log Entries and Test to Clear Values

Dual Tone Multifrequency Receiver Port (TTR) Error Log Entries

Error Type	Aux Data	Associated Test	Alarm Level	On/Off Board	Test to Clear Value
0[1]	0	Any	Any	Any	test port PCSSpp sh r 1
1 (b)	17664	Tone Detector Audit/Update Test (#43)	MAJOR/ MINOR (a)	ON	test port PCSSpp r 2
18	0	busyout port PCSSpp	WARNING	ON	release port PCSSpp
130 (d)		None	WARNING	ON	test port *PCSSpp* sh r 2
257 (c)	17666	Tone Detector Audit/Update Test (#43)	MAJOR/ MINOR (a)	ON	test port PCSSpp r 3
513	Any	Tone Detection Verification Test (#42)	MAJOR/ MINOR (a)	ON	test port PCSSpp r 3

1. Run the Short Test Sequence first. If all tests pass, run the Long Test Sequence. Refer to the appropriate test description and follow the recommended procedures.

Notes:

a. There are two possible alarm levels for this error: Major alarm and Minor alarm. A Major alarm is raised if the total number of DTMR ports currently in service is less than or equal to one half of the administered threshold number. Otherwise, a Minor alarm is raised. In either case, run the Short Test Sequence against the DTMR port and follow the error code procedures for the individual tests.

   The threshold number of DTMR ports for service is administered using the **change system-parameters maintenance** command.

b. This error indicates the DTMR port is having problems detecting touch-tone digits. If this error is being constantly logged, then the Tone Detector circuit pack containing the defective DTMR port should be replaced.

c. The DTMR port lost its translation. Testing the DTMR port is sufficient to reload its translation. If testing the DTMR port does not clear the error, then the Tone Detector circuit pack containing the defective DTMR port should be replaced.

d. This error type indicates that the circuit pack has been removed or has been insane for at least 11 minutes. To clear the error, reinsert or replace the circuit pack.

System Technician-Demanded Tests: Descriptions and Error Codes

Always investigate tests in the order presented in the table below when inspecting errors in the system. By clearing error codes associated with the *Tone Detection Verification Test,* for example, you may also clear errors generated from other tests in the testing sequence.

Order of Investigation	Short Test Sequence	Long Test Sequence	D/ND[1]
Tone Detection Verification Test (#42)	X	X	ND
Tone Detector Audit/Update Test (#43)	X	X	ND

1. D = Destructive; ND = Nondestructive

Tone Detection Verification Test (#42)

This test verifies the "touch-tone digits detection" capability of the DTMR port is functioning properly.

Table 3-159. TEST #42 Tone Detection Verification Test

Error Code	Test Result	Description/ Recommendation
none	ABORT	The system was not able to allocate all the resources needed for this test or there was an internal system error.
1	ABORT	The system could not allocate all the resources needed to test the DTMR port.
1001	ABORT	The system was unable to put the DTMR port in the appropriate mode to test it.
1002	ABORT	The system could not allocate time slots for the test connection. This could happen when the system is heavily loaded. If the system is not heavily loaded, then test the TDM Bus via the **test tdm [a|b]** command. Refer to the TDM-BUS (TDM Bus) Maintenance documentation for details. 1. Retry the command at 1-minute intervals a maximum of 5 times.

Continued on next page

Table 3-159. TEST #42 Tone Detection Verification Test — *Continued*

Error Code	Test Result	Description/ Recommendation
1003	ABORT	The system could not allocate a Tone Generator for the test connection. This could happen when the system is heavily loaded or there is not a Tone-Clock circuit pack in the port network when this test is being executed. 1. Make sure there is a Tone-Clock circuit pack in the same port network. 2. If a Tone-Clock circuit pack is missing, install one in the same port network. 3. Allow about 1 minute for the Tone-Clock maintenance to run on the newly inserted Tone-Clock circuit pack. 4. Retry the command at 1-minute intervals a maximum of 5 times.
2000	ABORT	Response to the test request was not received within the allowable time period.
2100	ABORT	Could not allocate the necessary system resources to run this test. 1. Retry the command at 1-minute intervals a maximum of 5 times.
2006	ABORT	DTMF detection failed. This could be caused by the administered companding mode of the system not matching that of the Tone Detector circuit pack. 1. Make sure that companding mode of the system matches that of the Tone Detector.
1-3	FAIL	DTMF digits were not correctly detected. 1. Run the Short Test Sequence: **test port PCSSpp sh r 1**. 2. If the problem persists, the system is still operating properly but system capacity will be reduced. In order to restore the system performance to normal, replace the Tone Detector circuit pack containing the defective DTMR port.
	PASS	The DTMR port is able to detect all the touch-tone digits.

Tone Detector Audit/Update Test (#43)

The DTMR port is refreshed with all time slot information and sanity audit is performed on the DTMR port.

Table 3-160. TEST #43 Tone Detector Audit/Update Test

Error Code	Test Result	Description/ Recommendation
	ABORT	The system was not able to allocate all the resources needed for this test. 1. Wait one minute and try again.
2000	ABORT	Response to the test request was not received within the allowable time period.
2100	ABORT	Could not allocate the necessary system resources to run this test. 1. Retry the command at 1-minute intervals for a maximum of 5 times.
	FAIL	Hardware audit failed. 1. Run the Short Test Sequence: **test port PCSSpp sh r 1**. 2. If the problem persists, the system is still operating properly but system capacity is reduced. In order to restore the system performance to normal, replace the Tone Detector circuit pack containing the defective DTMR port.
	PASS	The DTMR port has been successfully refreshed with its translation.

E-DIG-BD (Multi Application Platform Board)

MO Name (in Alarm Log)	Alarm Level	Initial Command to Run[1]	Full Name of MO
DIG800-BD	MIN	test board PCSS sh	MO800DIG-BD
DIG800-BD	WRN	test board PCSS sh	MO800DIG-BD

1. Where P is the port network number (1 for PPN); C is the carrier designation (for example, A, B, or C); and SS is the address of the slot in the carrier where the circuit pack is located (for example, 01, 02, ...).

The maintenance strategy for DIG800-BD is the same as the one described for MO-COMBD (MO-XXX-BD). Maintenance testing of the common circuit pack is handled by on-board firmware and SPE-controlled tests. Maintenance software queries the firmware for error and alarm information, status, and test results. The firmware automatically reports error conditions that will result in SPE-controlled testing.

Board Insertion

The switch makes an additional board query if any of the following circuit packs are inserted:

Circuit Pack	Vintage
TN754	49

For any of the above initial board up-links, the switch sends queries requesting additional data from the board for administration purposes, while also telling the board the switch software release and the system type.

For the native mode, the response to the board query downlink messages consists of several CCMS uplink messages that identify the true board code, vintage, suffix, emulation type, and the number of reserved slots it needs.

Hyperactivity

The common circuit pack is considered "hyperactive" if the service dispatcher receives 200 up-link messages from the circuit pack in a 10-second period. Since MAPD has 32 ports, the hyperactivity limit is increased to 500 up-link messages per 10seconds. An alarm is issued and the board taken out of service when the limit reaches 400 or when it hits 500 up-link messages in 10 seconds.

LED Use

The LED Control message 038x requests the Angel to drive the Red, Yellow, and Green LEDs on the face plate of typical port board on or off. On the MAPD, only the Red LED is controlled by this message. Yellow and Green change requests received from the switch by the MAPD drive LCD behavior rather than LED behavior. The switch continues to send the same LED control messages to the MAPD that it currently sends to all other port boards. The MAPD will handle proper interpretation of these messages. You should note that the PC on the MAPD, as well as the switch itself, can control the LEDs and the LCD on the MAPD.

Port Administration

In administration without hardware, the switch allows administration of up to 32 MAPD ports of any port type. If the port type later reported by the board does not match the existing type, the switch assumes the board is a MAPD board with a different configuration and rejects the board. MAPD_DCP_STA and MAPD_ASAI_STA are the only two types of terminals are allowed on a MAPD board. Therefore, while administering ports on MAPD using **add station form**, it will allow only the terminals mentioned above.

NOTE:
Refer to XXX-BD (Common Port Circuit Pack) maintenance documentation for circuit pack level errors. See also DIG-LINE maintenance documentation for related line information.

E-DIG-STA (Emulated Digital Line)

MO Name (in Alarm Log)	Alarm Level	Initial Command to Run[1]	Full Name of MO
E-DIG-STA	MINOR	test port PCSSpp l	Emulated Digital St.
E-DIG-STA	WARNING	test port PCSSpp sh	Emulated Digital St.

1. Where P is the port network number (1 for PPN); C is the carrier designation (for example, A, B, or C); and SS is the address of the slot in the carrier where the circuit pack is located (for example, 01, 02, ...).

There are 4 tests in the Emulated Digital Line station maintenance test sequence and only one test path in the test sequence. Once the test sequence is started, all tests in the test sequence are executed.

E-DIG-ST maintenance monitors and tests ports on the TN800 MAPD circuit pack and the hardware connected to those ports for lines administered as a digital station. These include stations with an emulated digital voice terminal and stations with an emulated digital voice terminal and a linked data module. Stand-alone data modules and data adaptors in stand-alone mode are not supported by the TN800 circuit pack. Circuit pack maintenance is covered by E-DIG-BD.

Hardware Error Log Entries and Test to Clear Values

Table 3-161. Digital Line Error Log Entries

Error Type	Aux Data	Associated Test	Alarm Level	On/Off Board	Test to Clear Value
0[1]	0	Any	Any	Any	test port PCSSpp sh r 1
18 (a)	0	busyout port PCSSpp	WNG	OFF	rel port PCSSpp
130 (b)		None	WNG	ON	test port PCSSpp sh
1793 (c)		Voice and Control Local Loop Test (#13)	MIN/ WNG[2]	ON	test port PCSSpp l r 3
2049 (d)		NPE Crosstalk Test (#9)	MIN/ WNG[2]	ON	test port PCSSpp l r 3
2305 (e)	32770	None			

Continued on next page

Table 3-161. Digital Line Error Log Entries — *Continued*

Error Type	Aux Data	Associated Test	Alarm Level	On/Off Board	Test to Clear Value
3840 (f)	40965	None			
3841 (g)	41029	None			
2304 (h)		None			

1. Run the Short Test Sequence first. If all tests pass, run the Long Test Sequence. Refer to the appropriate test description and follow the recommended procedures.
2. Major alarms may be downgraded to Warning alarms based on the value used in the **set options** command.

Notes:

a. Maintenance personnel has busied out the port in question. Make sure that the port is released from busyout by using the **release port PCSSpp** command.

b. The circuit pack has been removed or has been insane for more than 21 minutes. To clear the error, reinsert or replace the circuit pack.

c. The local loop test failed. Each failure increments the counter by 1 when the local loop test fails. The counter is decremented when the loop test passes. When the counter reaches a threshold of 3, an on-board MINOR alarm is raised. This is the code that is generated when the link between the circuit pack and the voice terminal is successfully reset. No technician action is necessary.

d. The NPE Cross talk test failed. The counter is incremented by 1 when the NPE Cross talk test fails. The counter is decremented by 1 when the NPE Cross talk test passes. When the counter reaches a threshold of 3, an on-board MINOR alarm is raised and the board is taken out of service.

e. The station went off-hook while it was in the ready-for-service state. Use the **status station** command to determine the state of the station. The off-hook should have moved the station to ready-for-service. No technician action is necessary.

f. No terminal is connected to the Digital Line board. No maintenance action is required.

g. The circuit pack's message buffer is full. This may be caused by having many display phones with heavy traffic connected to the circuit pack. No action is necessary.

h. Internal system error; no action is necessary. The error counters 1, 2, 3, 4, 5, 6, 10, 11, 12, 13, 14, 15, and 16 do not have any significance for this MO.

System Technician-Demanded Tests: Descriptions and Error Codes

Always investigate tests in the order presented in the table below when inspecting errors in the system. By clearing error codes associated with the Voice and Control Channel Local Loop Around Test, for example, you may also clear errors generated from other tests in the testing sequence.

Order of Investigation	Short Test Sequence	Long Test Sequence	D/ND[1]
Voice and Control Channel Local Loop Around Test (#13)		X	D
NPE Crosstalk Test (#9)		X	ND
Station Lamp Updates Test (#16)		X	ND

1. D = Destructive; ND = Nondestructive

Digital Line NPE Crosstalk Test (#9)

One or more Network Processing Elements (NPEs) reside on each circuit pack with a TDM Bus interface. The NPE controls port connectivity and gain and provides conferencing functions on a per-port basis. The NPE Crosstalk Test verifies that this port's NPE channel talks on the selected time slot and never crosses over to time slots reserved for other connections. If the NPE is not working correctly, one-way and noisy connections may be observed. This test is part of a port's Long Test Sequence and takes about 20 to 30 seconds to complete. Crosstalk testing occurs on both the primary information channel (voice) and the secondary information channel (data) associated with each digital station port. If this test fails on either channel, the station and the DTDM are taken out-of-service.

Table 3-162. TEST #9 Digital Line NPE Crosstalk Test

Error Code	Test Result	Description/Recommendation
1	ABORT	During testing of the primary information channel, system resources may not have been available or the port was busy during the test. 1. Check the port status. Use the **display port PCSSpp** command to determine the station extension of the port. Use the **status station** command to determine the service state of the port. If the service state indicates that the port is in use, then the port is unavailable for this test. You will have to wait until the port is idle. 2. If the port status is idle, then retry the command at 1-minute intervals a maximum of 5 times.
2	ABORT	During testing of DTDM, system resources may not have been available or he port was busy during the test. 1. Check if port is being used. If possible, disconnect by toggling the disconnect button on DTDM. Retry the command after 1 minute. **WARNING:** *This action drops the call in progress.*
1000	ABORT	System resources required to run this test are not available. The port may be busy with a valid call. Use **display port PCSSpp** to determine the station extension or attendant number of the port. Use **status station** or **status attendant** to determine the service state of the port. If the service state indicates that the port is in use, then the port is unavailable for certain tests. You must wait until the port is idle before retesting. Attendants are always in use (off-hook) if the handset is plugged in and the port is not busied out. 1. If the port status is idle, then retry the command at 1-minute intervals a maximum of 5 times.
1001	ABORT	System resources required to run this test are not available. 1. Retry the command at 1-minute intervals a maximum of 5 times.
1002	ABORT	The system could not allocate time slots for the test. The system is under heavy traffic conditions or has time slots out-of-service due to TDM-BUS errors. Refer to TDM-BUS to diagnose any active TDM-BUS errors. 1. If system has no TDM-BUS errors and is not handling heavy traffic, repeat test at 1-minute intervals a maximum of 5 times.

Continued on next page

Table 3-162. TEST #9 Digital Line NPE Crosstalk Test — *Continued*

Error Code	Test Result	Description/Recommendation
1003	ABORT	The system could not allocate a tone receiver for the test. The system is oversized for the number of Tone Detectors present, or some Tone Detectors are out-of-service. 1. Look for TTR-LEV errors in the Error Log. If present, refer to TTR documentation. 2. Look for TONE-PT errors in the Error Log. If present, refer to TONE-PT documentation. 3. If neither condition exists, retry the command at 1-minute intervals a maximum of 5 times.
1004	ABORT	The port was seized by a valid call during the test. 1. Use **display port PCSSpp** to determine the station extension or attendant number of the port. 2. Use **status station** or **status attendant** to determine the service state of the port. If the service state indicates that the port is in use, then the port is unavailable for certain tests. 3. Wait until the port is idle before retesting. Attendants are always in use (off-hook) if the handset is plugged in and the port is not busied out.
1020	ABORT	Test disabled by background testing. Use the **status station** command to determine when the station is available for testing.
2000	ABORT	Response to the test request was not received within the allowable time period. 1. Retry the command at 1-minute intervals a maximum of 5 times..
1 2	FAIL	The Network Processing Element (NPE) of the tested port is transmitting in error. This causes noisy and unreliable connections. Failure code 1 indicates that the Crosstalk test failed on the primary channel. Failure code 2 indicates that the Crosstalk test failed on the secondary channel. 1. Replace the circuit pack.
	PASS	The port is correctly using its allocated time slots. 1. To ensure that this is not an intermittent problem, repeat this test a maximum of 10 times. 2. If complaints persist, examine the station, connections, and wiring.

Voice and Control Channel Local Loop Test (#13)

These tests check the information and control channels between the Switch Processing Element (SPE) and the Digital Line port circuit. The SPE sends a message to loop around both the information and control channels for the port. First, the primary information (voice) channel loopback test sends a digital count from the Tone-Clock circuit pack on the primary information channel time slot and receives the same digital count with a general purpose tone detector.

While the primary information channel is still looped around, the Control Channel Loop Around Test sends four different transparent patterns to the on-board microprocessor, receives them back, and compares them.

The Loop Around Test for the secondary information (data) channel is the same as the primary information channel loop around test and is performed only if a DTDM is administered.

Next, a Conference Test checks the primary information channel. This test is the same as Conference Test #6.

The four tests will generate only one resulting value (Pass, Fail, or Abort). If any test fails or aborts, the test sequence stops.

Table 3-163. TEST #13 Voice and Control Channel Local Loop Test

Error Code	Test Result	Description/ Recommendation
	ABORT	Internal system error 1. Retry the command at 1-minute intervals a maximum of 5 times.
1000	ABORT	System resources required to run this test are not available. The port may be busy with a valid call. Use **display port PCSSpp** to determine the station extension or attendant number of the port. Use **status station** or **status attendant** to determine the service state of the port. If the service state indicates that the port is in use, then the port is unavailable for certain tests. Wait until the port is idle before retesting. Attendants are always in use (off-hook) if the handset is plugged in and the port is not busied out. 1. If the port status is idle, then retry the command at 1-minute intervals a maximum of 5 times.
1001	ABORT	System resources required to run this test are not available. 1. Retry the command at 1-minute intervals a maximum of 5 times.

Continued on next page

Table 3-163. TEST #13 Voice and Control Channel Local Loop Test — *Continued*

Error Code	Test Result	Description/ Recommendation
1002	ABORT	The system could not allocate time slots for the test. The system is under heavy traffic conditions or it has time slots out-of-service due to TDM-BUS errors. Refer to TDM-BUS to diagnose any active TDM-BUS errors. 1. If system has no TDM-BUS errors and is not handling heavy traffic, repeat test at 1-minute intervals a maximum of 5 times.
1003	ABORT	The system could not allocate a tone receiver for the test. The system is oversized for the number of Tone Detectors present, or some Tone Detectors are out-of-service. 1. Look for TTR-LEV errors in the Error Log. If present, refer to TTR-LEV documentation. 2. Look for TONE-PT errors in the Error Log. If present, refer to TONE-PT documentation. 3. If neither condition exists, retry the command at 1-minute intervals a maximum of 5 times.
1004	ABORT	The port was seized by a valid call during the test. The test has been aborted. Use the **display port PCSSpp** command to determine the station extension or attendant number of the port. Use **status station** or **status attendant** to determine the service state of the port. If the service state indicates that the port is in use, then the port is unavailable for certain tests. Wait until the port is idle before retesting. Attendants are always in use (off-hook) if the handset is plugged in and the port is not busied out. 1. Retry the command at 1-minute intervals a maximum of 5 times.
2000	ABORT	Response to the test request was not received within the allowable time period.
2100	ABORT	Could not allocate the necessary system resources to run this test. 1. Rerun the test at 1-minute intervals a maximum of 5 times.

Continued on next page

Table 3-163. TEST #13 Voice and Control Channel Local Loop Test — *Continued*

Error Code	Test Result	Description/ Recommendation
7	FAIL	Conference Test failed on primary channel. In some cases, users may not notice disruption in service. In extreme cases, conferencing feature may not work at all.
14	FAIL	The primary voice channel is not transmitting properly. User impact may range from noticing nothing to not being able to use this port.
15	FAIL	The control channel between the processor and digital circuit pack is not transmitting properly. User impact may range from noticing nothing to not being able to use the port. This could disrupt other users.
16	FAIL	The secondary voice channel is not transmitting properly. User impact may range from noticing nothing to not being able to use this port. 1. Run circuit pack tests to check the Tone Generator circuit pack and the Tone Detector circuit pack using the **test board PCSSpp** command. 2. Resolve any problems that are detected on the Tone Generator circuit pack or Tone Detector circuit pack. 3. If the Tone Generator and Tone Detector circuit packs are functioning properly and the test still fails, replace the Digital Line circuit pack.
	PASS	The test passed, and all channels are transmitting properly. 1. To ensure that this is not an intermittent problem, repeat this test up to 10 times. 2. If noisy connections for voice or corrupted data for data transfer persist, examine the station, connections, and wiring.

Station Lamp Updates Test (#16)

This test lights all lamps on the terminal as specified. The lamp updates will run only if the station is in-service. The status of the station is checked and the lamp updates are blocked from taking place if the station is not in the in-service state. This test does not affect the status of the Message Waiting lamp.

Table 3-164. TEST #16 DIG-LINE Station Lamp Updates Test

Error Code	Test Result	Description/ Recommendation
	ABORT	Internal system error 1. Retry the command at 1-minute intervals a maximum of 5 times.
1	ABORT	System technician may have busied out the port. 1. Look in the Error Log for Error Type 18 (port busied out) for this port. If this error type is present, then release the port with the **release station <extension>** command and run the test again. 2. Make sure that the terminal is connected. 3. Retry the command at 1-minute intervals a maximum of 5 times.
3	ABORT	Station may be in ready-for-service or out-of-service state. 1. Use the **status station** command to verify state of station. 2. Make sure the terminal is connected. 3. Retry the command at 1-minute intervals a maximum of 5 times.
1000	ABORT	System resources required to run this test are not available. The port is busy with a valid call. Use **display port PCSSpp** to determine the station extension or attendant number of the port. Use **status station** or **status attendant** to determine the service state of the port. If the service state indicates that the port is in use, then the port is unavailable for certain tests. Wait until the port is idle before retesting. Attendants are always in use (off-hook) if the handset is plugged in and the port is not busied out. 1. If the port status is idle, then retry the command at 1-minute intervals a maximum of 5 times.
1392	ABORT	This is currently a TTI port, and the test cannot execute on it. 1. Verify that the port is a TTI port using either the **display port** command (the display shows that the port is a TTI port) or the **list config** command (the display shows a `t` for the port). 2. If either **list config** or **display port** indicates that the port is *not* a TTI port, escalate the problem. If both commands indicate that the port is a TTI port, the abort is correct, and no action is necessary.
	FAIL	Internal system error 1. Retry the command at 1-minute intervals a maximum of 5 times.

Continued on next page

Table 3-164. TEST #16 DIG-LINE Station Lamp Updates Test — *Continued*

Error Code	Test Result	Description/ Recommendation
	PASS	The message to light all of the station lamps was sent successfully to the port. 1. Observe the station lamps being lit when running the test. If all lamps do not light successfully, the other Digital Line test results may indicate related problems that will not allow the lamps to light. 2. Investigate by using other Digital Line port tests and by examining the station, wiring, and connections.

EMG-XFER

Emergency Transfer (SCC Cabinets)

MO Name (in Alarm Log)	Alarm Level	Initial Command to Run[1]	Full Name of MO
EMG-XFER	MAJOR	test environment P	Emergency Transfer
EMG-XFER	WARNING	test environment P	Emergency Transfer

1. Where P is an appropriate port network number determined via the PORT field from the Alarm or Error Log.

The system provides the ability to cut designated analog phones through to CO trunks if the switch cannot provide even minimal phone service. This ability is known as Emergency Transfer. The EMG-XFER MO tracks the control of Emergency Transfer. There is one EMG-XFER MO for the port network. Emergency Transfer can be controlled by the system or can be manually controlled via the Emergency Transfer switch located on the Processor circuit pack. A manual ON position (up) generates a Major alarm. A manual OFF position (down) generates a Warning alarm. Unless a technician is currently working on the system, the switch should be left in the auto position.

Error Log Entries and Test to Clear Values

Table 3-165. Emergency Transfer Error Log Entries

Error Type	Aux Data	Associated Test	Alarm Level	On/Off Board	Test to Clear Value
0[1]	0	Any	Any	Any	test environment P sh r 1
1	Any	Emergency Transfer Query (#124)	MAJOR	ON	test environment P r 3
257	0	Emergency Transfer Query (#124)	WARNING	ON	test environment P r 3

1. Run the Short Test Sequence first. If all tests pass, run the Long Test Sequence. Refer to the appropriate test description and follow the recommended procedures.

System Technician-Demanded Tests: Descriptions and Error Codes

Always investigate tests in the order presented in the following tables. By clearing error codes associated with the *Cabinet Query Test,* for example, you may also clear errors generated from other tests in the testing sequence. For example, you may also clear errors generated from other tests in the testing sequence.

Single Carrier System

Order of Investigation	Short Test Sequence	Long Test Sequence	D/ND[1]
Cabinet Query Test (#122) (a)	X	X	ND
Emergency Transfer Query Test (#124)	X	X	ND
External Alarm Lead Query Test (#120) (b)	X	X	ND
Analog Ring Generator Initialization Test (#117) (c)	X	X	ND
Analog Ring Generator Query Test (#118) (c)	X	X	ND

1. D = Destructive; ND = Nondestructive

Notes:

a. Refer to “CABINET” for a description of this test.

b. Refer to “EXT-DEV” for a description of this test.

c. Refer to “RING-GEN” for a description of this test.

Emergency Transfer Query Test (#124)

This test queries the hardware for the state of the Emergency Transfer switch and reports the result. If the switch is in a position where the system software can control Emergency Transfer, then the test passes. If the switch is in a position where the system software cannot control Emergency Transfer, then the test fails. The Processor controls Emergency Transfer. The system software does not have control of Emergency Transfer within a cabinet if the switch is in the manual ON or manual OFF state.

Table 3-166. TEST #124 Emergency Transfer Query Test

Error Code	Test Result	Description/Recommendation
1000	ABORT	System resources required to run this test are not available. 1. Retry the command at 1-minute intervals a maximum of 5 times.
2000	ABORT	Response to the test request was not received within the allowable time period. 1. Retry the command at 1-minute intervals a maximum of 5 times. 2. If the test continues to ABORT with error code 2000, check for system powering problems with the A carrier. Resolve all CABINET alarms. Then, repeat the test.
2029	ABORT	Internal system error 1. Retry the command at 1-minute intervals a maximum of 5 times.
1	FAIL	Emergency Transfer is manually turned OFF via the Emergency Transfer switch.
2	FAIL	Emergency Transfer is manually turned ON via the Emergency Transfer switch. 1. Place the switch in the AUTO position.
	PASS	The system software has control of Emergency Transfer. If Emergency Transfer is invoked, then there can be a Major alarm in the system that is invoking Emergency Transfer. Table 3-167 lists the error types and MOs that may cause Emergency Transfer. If any or all of these errors appear in the log, then refer to the appropriate Maintenance documentation and resolve those problems first. If none of these errors appear in the log, then check the Emergency Transfer hardware.

Table 3-167. Test #124 Error Log Entries That Cause Emergency Transfer

MO Name	Error Type	Aux Data
SW-CTL	1	
SW-CTL	2	
TONE-BD	1	0
TONE-BD	2305	0

ERR-LOG (Error Log)

MO Name (in Alarm Log)	Alarm Level	Initial Command to Run	Full Name of MO
ERR-LOG	none	none	Error Log

Functional Description

The ERR-LOG MO is responsible for the sanity of the Alarm Log, the Hardware Error Log, and the Software Error Log. If an inconsistency is detected in any one of these logs, all logs are re-initialized and a hardware error is logged against ERR-LOG indicating the time of inconsistency. There are no tests and no alarms for the Error Log MO. This MO exists solely for the purpose of allowing errors to be logged against it.

Hardware Error Log Entries and Test to Clear Values

Error Type	Aux Data	Associated Test	Alarm Level	On/Off Board	Test to Clear Value
0[1]	Any	Any	Any	Any	none
510 (a)	Any	none	none	none	none

1. Run the Short Test Sequence first. If all tests pass, run the Long Test Sequence. Refer to the appropriate test description and follow the recommended procedures.

Notes:

a. This error indicates that an inconsistency was detected in either the Alarm Log, the Hardware Error Log, or the Software Error Log. To recover from this error, all of the logs were cleared and re-initialized. Any alarms that were active at the time of this error have been cleared. There is no associated test for this error.

The Aux data value indicates when the inconsistency was found:

0 Found during a periodic audit of the Error Log

1 Found after an extended reboot

2 Found after a reboot

3 Found after a Reset System 3 (Cold_1)

4 Found after a Reset System 2 (Cold_2)

16	Found after a Warm Start
100	Found after an internal software audit

ETR-PT (Enhanced Tone Receiver Port)

MO Name (in Alarm Log)	Alarm Level	Initial Command to Run[1]	Full Name of MO
ETR-PT(a)	MAJOR	test port PCSSpp sh	Enhanced Tone Receiver Port
ETR-PT	MINOR	test port PCSSpp sh	Enhanced Tone Receiver Port
ETR-PT	WARNING	test port PCSSpp sh	Enhanced Tone Receiver Port

1. P is the port network number (1 for PPN). C is the carrier designation (A, B, or C). SS is the number of the slot in which the circuit pack resides (01 to 21).

NOTE:
Replacing the tone/clock circuit pack requires a special procedure which is described in the documentation for TONE-BD. This section also describes the LED display for this board.

The TN2182 is a combined Tone Generator/Tone Detector board, providing 8 Enhanced Tone receiver (ETR) ports. Each of these ports provides the functions previously found individually on DTMR-PTs, GPTD-PTs and CLAS-PTs ports. Thus, each port on the TN2182 can be used for any tone detection function that was previously done by TN748, TN420 or TN744 Tone detection boards.

The TN2182 provides mu-law or A-law tone detection capability.

Since the TN2182 also provides Tone/Clock function, the TN2182 circuit pack is the only Tone board allowable in the CMC.

Hardware Error Log Entries and Test to Clear Values

Table 3-168. Enhanced Tone Receiver Port (ETR-PT) Error Log Entries

Error Type	Aux Data	Associated Test	Alarm Level	On/Off Board	Test to Clear Value
1	any	Tone Detector Audit/Update Test (#43)	MAJOR/ MINOR (a)	ON	test port PCSSpp r 2
18		busyout port	WARNING	OFF	release port PCSSpp
257 (b)	17666	Tone Detection Audit Update Test (#43)	MAJOR/ MINOR (a)	ON	test port PCSSpp r 3

Continued on next page

Table 3-168. Enhanced Tone Receiver Port (ETR-PT) Error Log Entries — *Continued*

Error Type	Aux Data	Associated Test	Alarm Level	On/Off Board	Test to Clear Value
513 (c)	any	Tone Detection Verification Test (#42)	MAJOR/ MINOR (a)	ON	test port PCSSpp r 3

Notes:

a. There are two possible alarm levels for this error type: major alarm and minor alarm. These alarm levels are dependent on the administered thresholds for TTR, CPTR and CCTR. Each ETR port is capable of operating an any of these.

   A major alarm is raised if the total number of ports capable of TTR, CPTR or CCTR detection currently in-service is less than or equal to 1/2 of the administered TTR, CPTR or CCTR threshold number.

   Otherwise, a minor alarm is raised. In either case, run the short test sequence against the port (ETR-PT) and follow the error code procedures for the individual tests.

   The threshold number of ports for service is administered using the **change system-parameters maintenance** command.

b. The ETR-PT lost its translation. Testing the ETR-PT is sufficient to reload its translation. If testing the ETR port does not clear the error, then the TN2182 circuit pack containing the defective ETR port should be replaced at a time when it is convenient to remove a clock board from the system. Follow the procedures described in the TONE-BD section for replacing a tone/clock circuit pack.

c. This error indicates the (ETR-PT) Enhanced Tone Receiver port is having problems detecting touch tones, call progress or MFC tones. If this error type is persistently logged, then the TN2182 circuit pack containing the defective ETR-PT should be replaced at a time it is convenient to remove a clock board from the system. Follow the procedures described in the TONE-BD section for replacing a tone/clock circuit pack.

d. The ETR-PT lost its translation. Testing the ETR-PT is sufficient to reload its translation. If testing the ETR port does not clear the error, then the TN2182 circuit pack containing the defective ETR port should be replaced at a time when it is convenient to remove a clock board from the system. Follow the procedures described in the TONE-BD section for replacing a tone/clock circuit pack.

System Technician-Demanded Tests: Descriptions and Error Codes

Always investigate tests in the order presented in the following tables when inspecting errors in the system. By clearing error codes associated with the *Tone Detection Verification Test*, for example, you may also clear errors generated from other tests in the testing sequence.

Order of Investigation	Short Test Sequence	Long Test Sequence	D/ND[1]
Tone Detection Verification Test (#42)	X	X	ND
Tone Detection Audit/Update Test (#43)	X	X	ND

1. D = Destructive; ND = Nondestructive

Tone Detection Verification Test (#42)

This test checks out a single ETR port in the touch-tone receiver mode MFC tone detection/generation mode and general purpose tone detection mode. During the first portion of the test, the touch-tone receiver mode is tested. Then general purpose call progress and maintenance tones are tested and lastly MFC tones are tested.

Table 3-169. TEST #42 Tone Detection Verification Test

Error Code	Test Result	Description/ Recommendation
none	ABORT	The system was not able to allocate all the resources needed for this test OR there was an Internal System Error.
1	ABORT	The system could not allocate all the resources needed to test the tones.
1001	ABORT	The system was unable to put the ETR-PT in the appropriate mode to test it.
1002	ABORT	The system could not allocate time slots for the test connection. This situation could occur when the system is heavily loaded. If the system is not heavily loaded, then test the TDM-BUS via the **test tdm** command. Refer to TDM-BUS for details. 1. Retry the command at 1-minute intervals a maximum of 5 times.

Continued on next page

Table 3-169. TEST #42 Tone Detection Verification Test — *Continued*

Error Code	Test Result	Description/ Recommendation
1003	ABORT	The system could not allocate a Tone-Clock for the test connection. This may be caused by a heavy load on the system or by a faulted Tone-Clock. 1. Check to see if there are any alarms against the Tone-Clock in the port network where the test aborted. If so refer to the recommended procedures for TONE-BD or TONE-PT. 2. If a new Tone-Clock has been inserted, allow about 1 minute for maintenance to run on the newly inserted circuit pack. 3. Retry the command at 1-minute intervals a maximum of 5 times.
2000	ABORT	Circuit Pack's response to the test request was not received within the allowable time period. 1. Retry the command at 1-minute intervals a maximum of 5 times.
2006	ABORT	This abort code indicates that the active Tone-Clock circuit pack or a Tone Detector circuit pack may not be functioning properly. On G3r V2 systems, this abort can also be caused by a mismatch between the companding mode administered for the system and that of the Tone Detector circuit pack. 1. [G3r V2] Make sure that the companding mode of the system matches that of the Tone Detector: mu-law for TN748; A-law for TN420. 2. Test the *active* Tone-Clock circuit pack in the port network with the **test tone-clock** PC command and refer to the TONE-BD section for failures. 3. Retry the command at 1-minute intervals a maximum of 5 times.
2100	ABORT	Could not allocate the necessary system resources to run this test. 1. Retry the command at 1-minute intervals a maximum of 5 times.
1-122	FAIL	DTMF digits were not detected correctly. 1. Run the short test sequence via the **test port** PCSSpp **sh r 1** command. 2. If the problem persists, the system is still operating properly but capacity will be reduced. To restore performance to normal, replace the circuit pack containing the defective ETR-PT (Enhanced Tone Receiver Port). Follow the procedures described in the TONE-BD section for replacing a tone/clock circuit pack.

Continued on next page

Table 3-169. TEST #42 Tone Detection Verification Test — *Continued*

Error Code	Test Result	Description/ Recommendation
102	FAIL	2225 Hz Modem Answer Tone was not detected correctly. This will impact call-classification operation. 1. Run the short test sequence via the **test port** PCSSpp sh r 1 command. 2. If the problem persists, the system can still operate properly but capacity will be reduced. In order to restore performance to normal, replace the circuit pack containing the defective port. Follow the procedures described in the TONE-BD section for replacing a tone/clock circuit pack.
130	FAIL	Forward or Backward MFC signals were not correctly generated or detected. This will impact MFC calls. 1. Run the short test sequence via the **test port** PCSSpp sh r 1 command. 2. If the problem persists, the system can still operate properly but capacity will be reduced. In order to restore performance to normal, replace the TN2182 circuit pack containing the defective ETR-PT. Follow the procedures described in the TONE-BD section for replacing a tone/clock circuit pack.
	PASS	Tone Detection Verification is successful. The ETR Port is able to detect/generate all necessary tones.

Tone Detector Audit/Update Test (#43)

A Digital Signal Processor sanity audit is performed on the ETR-PT.

Table 3-170. TEST #43 Tone Detector Audit/Update Test

Error Code	Test Result	Description/ Recommendation
none	ABORT	The system was not able to allocate all the resources needed for this test. 1. Wait 1 minute, and repeat the command a maximum of 5 times.
2000	ABORT	Response to the test request was not received within the allowable time period.
2100	ABORT	Could not allocate the necessary system resources to run this test. 1. Retry the command at 1-minute intervals a maximum of 5 times.

Continued on next page

Table 3-170. TEST #43 Tone Detector Audit/Update Test — *Continued*

Error Code	Test Result	Description/ Recommendation
	FAIL	Hardware audit failed. 1. Run the short test sequence via the **test port PCSSpp sh r 1** command. 2. If the problem persists, the system is still operating properly but system capacity will be reduced. In order to restore system performance to normal, replace the circuit pack containing the defective ETR-PT. Follow the procedures described in the TONE-BD section for replacing a tone/clock circuit pack.
	PASS	The ETR Port has passed the sanity inquiry.

EXT-DEV ADMIN? N (External Device Alarm)

MO Name (in Alarm Log)	Alarm Level	Initial Command to Run[1]	Full Name of MO
EXT-DEV	MAJOR	test environment P	External Device Alarm
EXT-DEV	MINOR	test environment P	External Device Alarm

1. Where P is an appropriate cabinet number determined via the PORT field from the Alarm or Error Log.

NOTE:
Use this Maintenance Object when the `External Device Alarm Admin?` field on the *change system-parameters customer-options* form is set to **n**.

The Processor in carrier A monitors the EXT-DEV alarm leads. The system only recognizes pairs connected to the 1M and 1m (ALARM MONITOR) leads. Refer to the *DEFINITY Communications System Generic 1 and Generic 3i Wiring,* 555-204-111, for more details.

Hardware Error Log Entries and Test to Clear Values

Table 3-171. Hardware Error Log Entries and Test to Clear Values

Error Type	Aux Data	Associated Test	Alarm Level	On/Off Board	Test to Clear Value
0[1]	0	Any	Any	Any	test environment UU r2 or 6
1 or 5	Any	External Device Alarm Test (#120)	MAJOR MINOR[2]	OFF	test environment UU r 2 or 6

1. Run the Short Test Sequence first. If all tests pass, run the Long Test Sequence. Refer to the appropriate test description and follow the recommended procedures.
2. One port generates a MAJOR alarm; the other port generates a MINOR alarm.

System Technician-Demanded Tests: Descriptions and Error Codes

Always investigate tests in the order presented in the table below when inspecting errors in the system. By clearing error codes associated with the *Cabinet Query Test,* you may also clear errors generated from other tests in the testing sequence.

Order of Investigation	Short Test Sequence	Long Test Sequence	D/ND[1]
Cabinet Query Test (#79)	X	X	ND
Emergency Transfer Query Test (#124) (a)	X	X	ND
External Device Alarm Test (MAJOR port) (#120)	X	X	ND
External Device Alarm Test (MINOR port) (#120)	X	X	ND
Analog Ring Generator Initialization Test (#117) (b)	X	X	ND
Analog Ring Generator Query Test (#118) (b)	X	X	ND

1. D = Destructive; ND = Nondestructive

Notes:

a. Refer to EMG-XFER (Emergency Transfer) section for a description of this test.

b. Refer to RING-GEN (Analog Ring Generator) section for a description of this test.

External Device Alarm Test (#120)

The External Device Alarm Test requests the state of the External Device Alarm from the Maintenance circuit pack and reports the results. The test has no effect on the external device itself.

Table 3-172. TEST #120 External Device Alarm Test

Error Code	Test Result	Description/ Recommendation
1000	ABORT	System resources required to run this test are not available. 1. Retry the command at 1-minute intervals a maximum of 5 times.

Continued on next page

Table 3-172. TEST #120 External Device Alarm Test — *Continued*

Error Code	Test Result	Description/ Recommendation
2000	ABORT	Response to the test request was not received within the allowable time period. 1. Retry the command at 1-minute intervals a maximum of 5 times. 2. If the test continues to ABORT with error code 2000, check for system powering problems with the A carrier. Look for and resolve all AC-POWER alarms. Then, repeat the test. 3. If the test continues to ABORT with a 2000 error code, check for and resolve all SYSAM errors. Then, repeat the test.
2029 2319 2320 2500	ABORT	Internal system error 1. Retry the command at 1-minute intervals a maximum of 5 times.
ANY	FAIL	The External Device Alarm has been activated by the external device. 1. Clear the major alarm on the external device, and rerun the test. 2. If the test still fails, then disconnect the External Device Alarms from the Maintenance circuit pack and rerun the test. 3. If the test still fails, then there is a problem with the Maintenance circuit pack that is reporting the alarm. This circuit pack should be replaced. There are failures that can occur on Maintenance circuit pack's that *will not* be detected by their respective maintenance, but which will cause many environment tests to fail. If many environment tests are failing, the suspect circuit pack should be replaced and the test rerun.
	PASS	If there is a problem with the external device, but the Maintenance circuit pack connected to the device reports no alarm, then the External Device may not be properly reporting the problems or the External Device may not be properly connected to the External Device.

EXT-DEV ADMIN? Y (External Device Alarm)

MO Name (in Alarm Log)	Alarm Level	Initial Command to Run	Full Name of MO
EXT-DEV	MAJOR	test eda-external-device-alrm physical location	External Device Alarm
EXT-DEV	MINOR	test eda-external-device-alrm physical location	External Device Alarm
EXT-DEV	WARNING	test eda-external-device-alrm physical location	External Device Alarm

NOTE:
Use this Maintenance Object when the `External Device Alarm Admin?` field on the *change system-parameters customer-options* form is set to **y**. You must have INADS or INIT login permission to administer EXT-DEV Alarm.

Generic 3i Maintenance circuit packs each have alarm leads which can be connected to external devices such as Uninterruptible Power Supplies (UPS) or adjuncts such as AUDIX. Certain conditions on the external device close the contacts on the alarm leads to notify the switch which in turn originates an EXT-DEV alarm.

The special locations UUmajor and UUminor are used to designate the major or minor maintenance board alarm connection for cabinet UU. The major/minor designation specifies the port, not the alarm level associated with the connection; for example, the “major” port can be administered as a major, minor, or warning alarm, and the “minor” port can be administered as a major, minor or warning alarm. In addition Analog line ports can also be administered as external device alarms.

NOTE:
An unadministered maintenance board external device alarm port, that is sensing a contact closure will have an entry in the Error Log and in the Alarm Log. INADS will not receive warning alarms.

The Processor monitors the EXT-DEV alarm leads. The system only recognizes pairs connected to the 1M and 1m (ALARM MONITOR) leads. Refer to the *DEFINITY Communications System Generic 1 and Generic 3i Wiring,* 555-204-111, for more details.

Hardware Error Log Entries and Test to Clear Values

Table 3-173. EXT-DEV ADMIN? Error Log Entries

Error Type	Aux Data	Associated Test	Alarm Level	On/Off Board	Test to Clear Value
0	0	Any	Any	Any	test eda-external-device-alrm physical location r 2 or 6
1 or 5	Any	External Device Alarm Test (#120)	Any	OFF	test eda-external-device-alrm physical location r 2 or 6

NOTE:
The loss of -48 volt power will prevent detection of an external device alarm. AC-POWER and DC-POWER alarms could indicate the loss of the external device alarm -48 volt power source. ALARM-PT alarms may also indicate a loss of power. When analog line ports are administered as analog line external device alarms loss of -48 volts will prevent detection of an external device alarm.

System Technician-Demanded Tests: Descriptions and Error Codes

Always investigate tests in the order presented in the table below when inspecting errors in the system. By clearing error codes associated with the *External Device Alarm Test,* you may also clear errors generated from other tests in the testing sequence.

Order of Investigation	Short Test Sequence	Long Test Sequence	D/ND[1]
External Device Alarm Test (MAJOR port) (#120)	X	X	ND
External Device Alarm Test (MINOR port) (#120)	X	X	ND
External Device Alarm Test (WARNING port) (#120)	X	X	ND

1. D = Destructive; ND = Nondestructive

External Device Alarm Test (#120)

The External Device Alarm Test requests the state of the External Device Alarm from a Maintenance circuit pack and reports the results. The test has no effect on the external device itself.

Table 3-174. TEST #120 External Device Alarm Test

Error Code	Test Result	Description/ Recommendation
1000	ABORT	System resources required to run this test are not available. 1. Retry the command at 1-minute intervals a maximum of 5 time.
1035	ABORT	The Expansion Port Network containing this equipment is not available Look for and resolve all Expansion Port Network problems with this cabinet.
2000	ABORT	Response to the test request was not received within the allowable time period. 1. Retry the command at 1-minute intervals a maximum of 5 time. 2. (Maintenance Board) If the test continues to ABORT with error code 2000, check for system powering problems with the A carrier. Then, repeat the test. 3. (Maintenance Board) If the test continues to ABORT with a 2000 error code, check for and resolve all maintenance circuit pack errors. Then, repeat the test.
2029 2100 2319 2320 2500	ABORT	Internal system error 1. Retry the command at 1-minute intervals a maximum of 5 times.
ANY	FAIL	The External Device Alarm has been activated by the external device. 1. Clear the major alarm on the external device, and rerun the test. 2. If the test still fails, then disconnect the External Device Alarm Leads from the Maintenance circuit pack and rerun the test. 3. If the test still fails, then there is a problem with the analog external device alarm port or the Maintenance circuit pack that is reporting the alarm. This circuit pack should be replaced. There are failures that can occur on the Maintenance circuit pack that *will not* be detected by their respective maintenance, but which will cause many environment tests to fail. If many environment tests are failing, the suspect circuit pack should be replaced and the test rerun.
	PASS	If there is a problem with the external device, but the administered analog line external device alarm, or the administered Maintenance circuit pack connected to the device reports no alarm, then the External Device may not be properly reporting the problems or the External Device may not be properly connected to the External Device Alarm Lead.

GPTD-PT [General Purpose Tone Detector Port (CPTR)]

MO Name (in Alarm Log)	Alarm Level	Initial Command to Run[1]	Full Name of MO
GPTD-PT	MAJOR	test port PCSSpp sh	General Purpose Tone Detector Port (CPTR)
GPTD-PT	MINOR	test port PCSSpp sh	General Purpose Tone Detector Port (CPTR)
GPTD-PT	WARNING	release port PCSSpp	General Purpose Tone Detector Port (CPTR)

1. Where P is the port network number (1 for PPN); C is the carrier designation (for example, A, B, or C); SS is the address of the slot in the carrier where the circuit pack is located (for example, 01, 02, ..., etc.); and pp is the 2-digit port number (for example, 01).

The General Purpose Tone Detector (GPTD) Port, also known as Call Progress Tone Receiver (CPTR), resides on the TN2182 combined tone detector and tone clock circuit pack. (The TN744 is used for additional ports.) There are two GPTD ports and four Dual Tone Multifrequency Receiver (DTMR) ports on a Tone Detector circuit pack. The GPTD port is used to perform level measurements of test tones and to detect call progress tones. Examples of call progress tones are dial tone, ring back, busy, alert, confirmation, and recall dial. The abilities of the GPTD port to perform level measurements of test tones and to detect call progress tones are essential for maintenance of other circuit packs (for example, Tone-Clock).

The GPTD maintenance feature defines a set of tests to ensure that the general purpose tone detection capability of the GPTD port is functioning properly. For all Tone Detector circuit pack level errors (DETR-BD), refer to the"XXX-BD (Common Port Circuit Pack)" Maintenance documentation.

HYB-BD (Hybrid Line Circuit Pack)

MO Name (in Alarm Log)	Alarm Level	Initial Command to Run[1]	Full Name of MO
HYB-BD	MIN	test board PCSS sh	Hybrid Line Circuit Pack
HYB-BD	WRN	test board PCSS sh	Hybrid Line Circuit Pack

1. Where P is the port network number (1 for PPN); C is the carrier designation (for example, A, B, or C); and SS is the address of the slot in the carrier where the circuit pack is located (for example, 01, 02, ..., etc.).

Refer to "XXX-BD (Common Port Circuit Pack)" Maintenance documentation for circuit pack level errors. See also "HYB-LINE (Hybrid Line)" Maintenance documentation for related line information.

HYB-LINE (Hybrid Line)

MO Name (in Alarm Log)	Alarm Level	Initial Command to Run[1]	Full Name of MO
HYB-LINE	Minor	test port PCSSpp l	Hybrid Line
HYB-LINE	Warning	test port PCSSpp l	Hybrid Line

1. Where P is the port network number (1 for PPN); C is the carrier designation (for example, A, B, or C); SS is the address of the slot in the carrier where the circuit pack is located (for example, 01, 02, ..., etc.); and pp is the 2-digit port number (for example, 01).

Hybrid Line is the user-friendly name for Hybrid Line, which was previously used to denote the Multifunction Analog Telephone. The Hybrid Line set is also known as an SCS (Small Communications System).

The TN762B Hybrid Line circuit pack supports eight of these multifunction analog telephone sets, as shown in the following figure. The Hybrid Line sets use three pairs of wires: an analog voice pair, a transmit/receive pair, and a power pair.

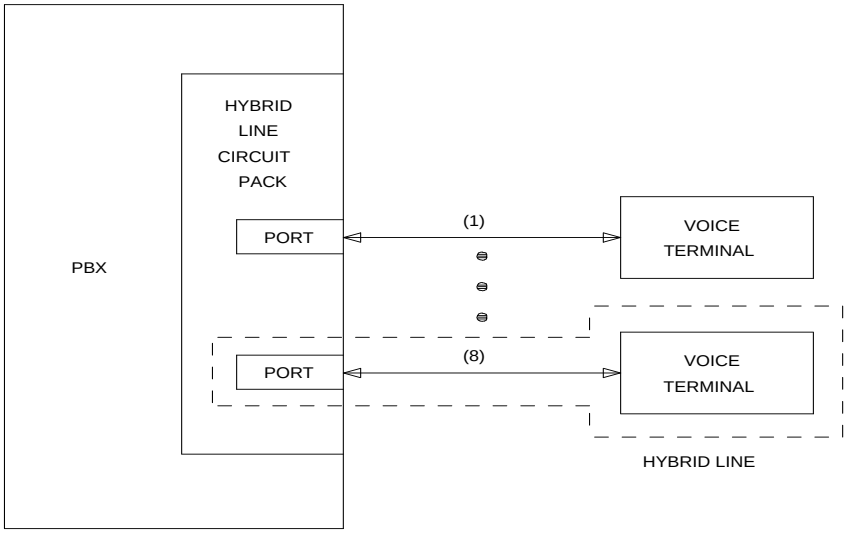

Figure 3-12. Hybrid Station Interactions

This section refers only to the HYB-LINE (Hybrid Line) maintenance that is performed. Please note that the HYB-LINE (Hybrid Line) maintenance is closely related to, and interacts with, the HYB-BD (Hybrid Line circuit pack) maintenance in some instances. Some of the results of maintenance testing of the Hybrid Line may be affected by the health of the Hybrid Line circuit pack. This interaction should be kept in mind when investigating the cause of reported Hybrid Line problems.

There are instances in this section where "service states" of a station are mentioned. It is helpful to understand what is meant by the different service states that may exist. An explanation of these service states follows:

- Out-of-Service–The port, and thus the station, have been removed from service. A busyout of a port causes it to be out-of-service.
- Ready-for-Service–Once a port on the circuit pack has been put into service, the voice terminal must communicate that it is present. The time between these two events is the time when the terminal is in the ready-for-service state.
- In-Service–Once the system has received a message from the voice terminal communicating that it is present, the station is put into the in-service state. The terminal can also be forced into the in-service state if it goes off-hook while it is in the ready-for-service state.

When the **status station** command has been run, and the status screen appears, the status is reported as either out-of-service or in-service, which mean exactly as stated in the above list, or disconnect, which means the station is in the ready-for-service state.

Hardware Error Log Entries and Test to Clear Values

Table 3-175. Hybrid Line Error Log Entries

Error Type	Aux Data	Associated Test	Alarm Level	On/Off Board	Test to Clear Value
0[1]	0	Any	Any	Any	test port PCSSpp sh r 1
1 (a)	Any	None	WARNING	OFF	
15 (b)	Any	Hybrid Audits Test (#61)			
18 (c)	0	busyout port PCSSpp	WARNING	OFF	release port PCSSpp
130 (d)		None	WARNING	ON	test port PCSSpp sh
257 (e)	40988	None	MIN/WRN[2]	OFF	

Continued on next page

Table 3-175. Hybrid Line Error Log Entries — *Continued*

Error Type	Aux Data	Associated Test	Alarm Level	On/Off Board	Test to Clear Value
513 (f)	40965	Hybrid Line Audits Test (#61)	WARNING	OFF	test port PCSSpp sh r 4
769 (g)		Remote Dig Loop Around Test (#59)	WARNING	OFF	test port PCSSpp sh r 3
1025		Hybrid & Conf. Circuits Test (#57)	MIN/WRN[2]	ON	test port PCSSpp l r 3
1281 (h)		Local Digital Loop Around Test (#58)	WARNING	ON	test port PCSSpp l r 3
1537 (i)	40968	None	WARNING	OFF	
1793		TDMNPE Crosstalk Test (#6)	MIN/WRN[2]	ON	test port PCSSpp l r 3
2049 (j)	32770	None			
2049 (k)	40967	None			

1. Run the Short Test Sequence first. If all tests pass, run the Long Test Sequence. Refer to the appropriate test description and follow the recommended procedures.
2. Major or Minor alarms on this MO may be downgraded to Warning alarms based on the values used in the **set options** command.

Notes:

a. Indicates a defective data link. An off-board problem was detected by port circuit. Verify that the Hybrid set is connected and that the EPF test passes. If data transmission problems are experienced, check for defective wiring or a defective voice terminal, or move terminal closer to the switch (in terms of feet of wire from the jack to the switch). If the problem still exists, replace the circuit pack. Once the problem has been resolved, the alarm is retired after a predetermined period of time.

b. This is a software audit error that does not indicate any hardware malfunction. Run Short Test Sequence and investigate associated errors (if any).

c. This error type is logged when the port in question is busied out by maintenance personnel. Make sure port is released from busyout via the **release port PCSSpp** command.

d. This error type indicates that the circuit pack has been removed or has been insane for more than 11 minutes. To clear the error, reinsert or replace the circuit pack.

e. This indicates that the EPF has been turned off due to an overcurrent condition at the voice terminal. Check for defective wiring or a damaged jack, and make sure the voice terminal is a Hybrid set. Once the problem has been resolved, the alarm is retired after a predetermined period of time.

f. This indicates that the voice terminal has probably been disconnected or that there is a problem in the wiring to the terminal. Make sure that the voice terminal is connected or check for defective wiring to the voice terminal.

g. Note that Error Types 769 and 1281 by themselves create Warning alarms only, but if both are present, a Minor alarm is logged.

h. This indicates that there is something wrong with the data link to the voice terminal. An in-line maintenance error has generated an off-board warning. Ignore it if there are no complaints. Otherwise, make sure the voice terminal is connected, check for defective wiring, check for a defective voice terminal, and move voice terminal closer to the switch (in terms of feet of wire from the jack to the switch). If the problem still exists, replace the circuit pack.

i. This indicates that the station went off-hook while in the disconnect state. Use the **status station** command to determine the state of the station. The off-hook should have moved the station to in-service. No system technician action is necessary.

j. This is the code that is generated when the link between the circuit pack and the voice terminal is successfully reset. No system technician action is necessary.

System Technician-Demanded Tests: Descriptions and Error Codes

Always investigate tests in the order presented in the table below when inspecting errors in the system. By clearing error codes associated with the *Local Digital Loop Around Test*, for example, you may also clear errors generated from other tests in the testing sequence.

Table 3-176. System Technician-Demanded Tests: HYB-LINE

Order of Investigation	Short Test Sequence	Long Test Sequence	D/ND[1]
Local Digital Loop Around Test (#58)		X	ND
NPE Crosstalk Test (#6)		X	ND

Continued on next page

Table 3-176. System Technician-Demanded Tests: HYB-LINE — *Continued*

Order of Investigation	Short Test Sequence	Long Test Sequence	D/ND[1]
Hybrid Electronic Power Feed Test (#56)		X	ND
Hybrid Circuit and Conference Circuit Test (#57)		X	ND
Remote Digital Loop Around Test (#59)	X	X	ND
Station Lamp Update Test (#60)	X	X	ND
Station Audits Test (#61)	X	X	ND
Ringer Update Test (#62)	X	X	ND

1. D = Destructive, ND = Non-destructive

NPE Crosstalk Test (#6)

One or more NPEs reside on each circuit pack with a TDM Bus interface. The NPE controls port connectivity and gain, and provides conferencing functions on a per port basis. The NPE Crosstalk Test verifies that this port's NPE channel talks on the selected time slot and never crosses over to time slots reserved for other connections. If the NPE is not working correctly, one-way and noisy connections may be observed. This test is part of a port's Long Test Sequence and takes about 20 to 30 seconds to complete.

Table 3-177. TEST #6 NPE Crosstalk Test

Error Code	Test Result	Description/ Recommendation
	ABORT	Could not allocate the necessary system resources to run this test. 1. Retry the command at 1-minute intervals a maximum of 5 times.

Continued on next page

Table 3-177. TEST #6 NPE Crosstalk Test — *Continued*

Error Code	Test Result	Description/ Recommendation
1000	ABORT	System resources required to run this test are not available. The port may be busy with a valid call. Use the **display port PCSSpp** command to determine the station extension number of the port. Use the **status station** command to determine the service state of the port. If the service state indicates that the port is in use, then the port is unavailable for certain tests. You must wait until the port is idle before retesting. Attendants are always in use (off-hook) if the handset is plugged in and the port is not busied out. 1. If the port status is idle, then retry the command at 1-minute intervals a maximum of 5 times.
1001	ABORT	Could not allocate the necessary system resources to run this test. This could be due to a failure to seize the port. 1. Retry the command at 1-minute intervals a maximum of 5 times.
1002	ABORT	The system could not allocate time slots for the test. The system may be under heavy traffic conditions or it may have time slots out-of-service due to TDM-BUS errors. Refer to TDM-BUS (TDM Bus) Maintenance documentation to diagnose any active TDM-BUS errors. 1. If system has no TDM-BUS errors and is not handling heavy traffic, repeat test at 1-minute intervals a maximum of 5 times.
1003	ABORT	The system could not allocate a tone receiver for the test. The system may be oversized for the number of Tone Detectors present or some Tone Detectors may be out-of-service. 1. Look for TTR-LEV errors in the Error Log. If present, refer to TTR-LEV (TTR Level) Maintenance documentation. 2. Look for TONE-PT errors in the Error Log. If present, refer to TONE-PT (Tone Generator) Maintenance documentation. 3. If neither condition exists, retry the test at 1-minute intervals a maximum of 5 times.
1004	ABORT	The port was seized by a valid call during the test. The test has been aborted. Use the **display port PCSSpp** command to determine the station extension number of the port. Use the **status station** command to determine the service state of the port. If the service state indicates that the port is in use, then the port is unavailable for certain tests. You must wait until the port is idle before retesting. Attendants are always in use (off-hook) if the handset is plugged in and the port is not busied out. 1. Retry the command at 1-minute intervals a maximum of 5 times.

Continued on next page

Table 3-177. TEST #6 NPE Crosstalk Test — *Continued*

Error Code	Test Result	Description/ Recommendation
1018	ABORT	Test disabled via administration. This only applies to analog stations. The default for this field is 'y,' so you may want to determine why it has been turned off for this station. 1. To enable test, set the `Test` field on the station administration screen for the particular analog station being tested to **y**. Use the **change station <extension>** command.
2000	ABORT	Response to the test request was not received within the allowable time period. 1. Retry the command at 1-minute intervals a maximum of 5 times.
2020	ABORT	The test did not run due to an already existing error on the specific port or a more general circuit pack error. 1. Examine Error Log for existing errors against this port or the circuit pack and attempt to diagnose the already existing error.
2100	ABORT	Could not allocate the necessary system resources to run this test. This could be due to a failure to seize the port. 1. Retry the command at 1-minute intervals a maximum of 5 times.
Any	FAIL	This test can fail due to on-board or off-board problems. Off-board problems of concern include EXP-INTF faults, TDM-BUS faults, and faults associated with the tone detectors/tone generators. Clear all off-board problems before replacing the board. Keep in mind that a TDM-BUS problem is usually the result of a faulty board connected to the backplane or bent pins on the backplane. 1. Look for EXP-INTF errors in the error log. If present, refer to the EXP-INTF Maintenance documentation. 2. Look for TDM-BUS errors in the error log. If present, refer to the TDM-BUS Maintenance documentation. 3. Retest the board when the faults from steps 1 and 2 are cleared.
	PASS	The port is correctly using its allocated time slots. User-reported troubles on this port should be investigated using other port tests and examining station, trunk, or external wiring.

Continued on next page

Table 3-177. TEST #6 NPE Crosstalk Test — *Continued*

Error Code	Test Result	Description/ Recommendation
0	NO BOARD	The test could not relate the internal ID to the port (no board). This could be due to incorrect translations, no board is inserted, an incorrect board is inserted, or an insane board is inserted. 1. Check to ensure that the board translations are correct. Use the **list config** command, and resolve any problems that are found. 2. If the board was found to be correctly inserted in step 1, issue the **busyout board** command. 3. Issue the **reset board** command. 4. Issue the **release busy board** command. 5. Issue the **test board long** command. This should re-establish the linkage between the internal ID and the port. If this is not the case, dispatch to check to ensure that there is a valid board inserted.

Hybrid Electronic Power Feed Test (#56)

In this test, the software requests that the EPF be turned on for a given port. An attempt is made to turn on the power unit from the station. If no current is being drawn, this probably indicates that the station is not connected. If an overcurrent condition is sensed (that is, too much current is being drawn), this may indicate a short in the loop or a defective voice terminal. Depending on what condition is sensed, a message is returned stating that either the EPF was turned on successfully with no problems or that an overcurrent condition is sensed. This test is repeated once more five seconds later. If either test is not successful, the test aborts (see first ABORT entry in the table below).

Table 3-178. TEST #56 Hybrid Electronic Power Feed Test

Error Code	Test Result	Description/ Recommendation
	ABORT	Internal system error 1. Retry the command at 1-minute intervals a maximum of 5 times.

Continued on next page

Table 3-178. TEST #56 Hybrid Electronic Power Feed Test — *Continued*

Error Code	Test Result	Description/ Recommendation
1000	ABORT	System resources required to run this test are not available. The port may be busy with a valid call. Use the **display port PCSSpp** command to determine the station extension number of the port. Use the **status station** command to determine the service state of the port. If the service state indicates that the port is in use, then the port is unavailable for certain tests. You must wait until the port is idle before retesting. Attendants are always in use (off-hook) if the handset is plugged in and the port is not busied out. 1. If the port status is idle, then retry the command at 1-minute intervals a maximum of 5 times.
	FAIL	Internal system error 1. Retry the command at 1-minute intervals a maximum of 5 times.
	PASS	EPF test passed. The message to turn on the power to the station was successfully sent to the port. 1. Although this test never returns a FAIL result, after running this test, the Error Log should be checked for any entries with Error Type 257 to examine the real results of this test. 2. If Error Type 257 does not appear in the Error Log within 10 seconds after completion of this test, it is safe to assume that the test sensed no problems with the power to the station. To verify that the station is powered up correctly, run a self-test on the station, if available, and check that all the feature buttons are operating. 3. If Error Type 257 appears in the Error Log, this indicates some problem with the power to the station. The system technician should check for a short in the wiring, a damaged jack, a defective voice terminal, or an incorrect type of terminal.
0	NO BOARD	The test could not relate the internal ID to the port (no board). This could be due to incorrect translations, no board is inserted, an incorrect board is inserted, or an insane board is inserted. 1. Check to ensure that the board translations are correct. Use the **list config** command, and resolve any problems that are found. 2. If the board was found to be correctly inserted in step 1, issue the **busyout board** command. 3. Issue the **reset board** command. 4. Issue the **release busy board** command. 5. Issue the **test board long** command. This should re-establish the linkage between the internal ID and the port. If this is not the case, dispatch to check to ensure that there is a valid board inserted.

Hybrid Circuit and Conference Circuit Test (#57)

This test checks the amount of reflection from the Hybrid loop around circuitry and a Conference Test. Please be aware that if no station is connected to the port being tested, the results of the test are not valid. The Tone-Clock circuit pack places a 1004-Hz tone on a time slot that the port circuit is listening on. A GPTD is connected to another time slot that the same port circuit is talking on. The on-board microprocessor places the port in the loop around mode and the GPTD measures the level of the reflected signal.

The Conference Test is performed after the Circuit Test. The Conference Circuit Test verifies that the NPE is able to listen to several test tones and correctly conference them together. The test is executed in two parts. The first half of the test checks the operation of the NPE's first three conference channels. The NPE is put in the loop around mode and instructed to talk on a selected time slot and listen to the 1004-Hz tone using the first three Conference Channels. The signal level and noise level of the conferenced output are then measured using a GPTD and checked to verify that they are within an acceptable range.

The second half of the Conference Test checks the operation of the NPE's remaining four Conference Channels and follows the same procedure as the preceding paragraph.

Table 3-179. TEST #57 Hybrid Circuit and Conference Circuit Test

Error Code	Test Result	Description/ Recommendation
	ABORT	Could not allocate the necessary system resources to run this test. 1. Retry the command at 1-minute intervals a maximum of 5 times.
1000	ABORT	System resources required to run this test are not available. The port may be busy with a valid call. Use the **display port PCSSpp** command to determine the station extension number of the port. Use the **status station** command to determine the service state of the port. If the service state indicates that the port is in use, then the port is unavailable for certain tests. You must wait until the port is idle before retesting. Attendants are always in use (off-hook) if the handset is plugged in and the port is not busied out. 1. If the port status is idle, then retry the command at 1-minute intervals a maximum of 5 times.
1001	ABORT	Could not allocate the necessary system resources to run this test. This could be due to a failure to seize the port. 1. Retry the command at 1-minute intervals a maximum of 5 times.

Continued on next page

Table 3-179. TEST #57 Hybrid Circuit and Conference Circuit Test — *Continued*

Error Code	Test Result	Description/ Recommendation
1002	ABORT	The system could not allocate time slots for the test. The system may be under heavy traffic conditions or it may have time slots out-of-service due to TDM-BUS errors. Refer to TDM-BUS (TDM Bus) Maintenance documentation to diagnose any active TDM-BUS errors. 1. If the system has no TDM-BUS errors and is not handling heavy traffic, repeat test at 1-minute intervals a maximum of 5 times.
1003	ABORT	The system could not allocate a tone receiver for the test. The system may be oversized for the number of Tone Detectors present or some Tone Detectors may be out-of-service. 1. Look for TTR-LEV errors in the Error Log. If present, refer to TTR-LEV (TTR Level) Maintenance documentation. 2. Look for TONE-PT errors in the Error Log. If present, refer to TONE-PT (Tone Generator) Maintenance documentation. 3. If neither condition exists, retry the test at 1-minute intervals a maximum of 5 times.
1004	ABORT	The port was seized by a valid call during the test. The test has been aborted. Use the **display port PCSSpp** command to determine the station extension number of the port. Use the **status station** command to determine the service state of the port. If the service state indicates that the port is in use, then the port is unavailable for certain tests. You must wait until the port is idle before retesting. Attendants are always in use (off-hook) if the handset is plugged in and the port is not busied out. 1. Retry the command at 1-minute intervals a maximum of 5 times.
2000	ABORT	Response to the test request was not received within the allowable time period. 1. Retry the command at 1-minute intervals a maximum of 5 times.

Continued on next page

Table 3-179. TEST #57 Hybrid Circuit and Conference Circuit Test — *Continued*

Error Code	Test Result	Description/ Recommendation
7	FAIL	Conference Test failed. User may be able to use conference circuit without difficulty in some cases. In other extreme cases, conference calling will be totally restricted. The failure may be due to off-board circumstances, the most common of which is an off-hook occurring during the test. Also, check the error logs against the GPTD-BD, the TONE-BD, and the TONE-PT. 1. This error can be caused by a disconnected terminal. First, ensure that the terminal is connected and the wiring is OK. 2. Then, issue the **display port** and the **status station** commands to determine if the station is idle. If it is idle, issue the **test port** command for this port. 3. If test continues to fail, issue the **busyout port** and the **release port** commands, and then retest the port. 4. It is possible that the port may still be functional from a user's point of view.
57	FAIL	Hybrid Circuit Test failed. This could result in noisy or bad connections. 1. This error can be caused by a disconnected terminal. First, ensure that the terminal is connected and the wiring is OK. 2. Run circuit pack tests to check the Tone Generator circuit pack and the Tone Detector circuit pack using the **test board PCSS short** command. 3. Resolve any problems that are detected on the Tone Generator circuit pack or Tone Detector circuit pack. 4. If the Tone Generator and Tone Detector circuit packs are functioning properly, and the test still fails, replace the Hybrid Line circuit pack. **NOTE:** If the Hybrid Circuit and Conference Circuit Test fails for all ports on a circuit pack, a -5 volt power problem is indicated.
	PASS	Hybrid Circuit and Conference Circuit Test passed. The hybrid circuitry is transmitting properly. 1. If complaints still exist, investigate by using other port tests, and by examining the station, wiring, and connections.

Continued on next page

Table 3-179. TEST #57 Hybrid Circuit and Conference Circuit Test — *Continued*

Error Code	Test Result	Description/ Recommendation
0	NO BOARD	The test could not relate the internal ID to the port (no board). This could be due to incorrect translations, no board is inserted, an incorrect board is inserted, or an insane board is inserted. 1. Check to ensure that the board translations are correct. Use the **list config** command, and resolve any problems that are found. 2. If the board was found to be correctly inserted in step 1, issue the **busyout board** command. 3. Issue the **reset board** command. 4. Issue the **release busy board** command. 5. Issue the **test board long** command. This should re-establish the linkage between the internal ID and the port. If this is not the case, dispatch to check to ensure that there is a valid board inserted.

Hybrid Line Local Digital Loop Around Test (#58)

This test checks the control channel between the SPE and the port's digital circuitry. The SPE sends transparent data to the on-board microprocessor and compares the data echoed back. This test is repeated three times.

Table 3-180. TEST #58 Hybrid Line Local Digital Loop Around Test

Error Code	Test Result	Description/ Recommendation
	ABORT	Internal system error 1. Retry the command at 1-minute intervals a maximum of 5 times.
1000	ABORT	System resources required to run this test are not available. The port may be busy with a valid call. Use the **display port PCSSpp** command to determine the station extension number of the port. Use the **status station** command to determine the service state of the port. If the service state indicates that the port is in use, then the port is unavailable for certain tests. You must wait until the port is idle before retesting. Attendants are always in use (off-hook) if the handset is plugged in and the port is not busied out. 1. If the port status is idle, then retry the command at 1-minute intervals a maximum of 5 times.

Continued on next page

Table 3-180. TEST #58 Hybrid Line Local Digital Loop Around Test — *Continued*

Error Code	Test Result	Description/ Recommendation
1004	ABORT	The port was seized by a valid call during the test. The test has been aborted. Use the **display port PCSSpp** command to determine the station extension number of the port. Use the **status station** command to determine the service state of the port. If the service state indicates that the port is in use, then the port is unavailable for certain tests. You must wait until the port is idle before retesting. Attendants are always in use (off-hook) if the handset is plugged in and the port is not busied out. 1. Retry the command at 1-minute intervals a maximum of 5 times.
2000	ABORT	Response to the test request was not received within the allowable time period. 1. Retry the command at 1-minute intervals a maximum of 5 times.
1,2,3	FAIL	The control channel between the processor and the port is not transmitting properly. This port is not operable. 1. Retry the test. 2. If the failure still occurs, issue the **busyout** and the **release busy** commands, and then retest. 3. If the failure is occurring on more than one port on the board, suspect the board. 4. If the failure is occurring on several boards in the same carrier, escalate the problem. 5. If the failure still occurs and appears to be isolated to one port, check all wiring to the set and all set connections. 6. Replace the circuit pack as a last resort.
	PASS	Hybrid Line Local Digital Loop Around Test passed. The control channel is transmitting properly. 1. If complaints still exist, investigate by using other circuit pack tests, and by examining the station, wiring, and connections.

Continued on next page

Table 3-180. TEST #58 Hybrid Line Local Digital Loop Around Test — *Continued*

Error Code	Test Result	Description/ Recommendation
0	NO BOARD	The test could not relate the internal ID to the port (no board). This could be due to incorrect translations, no board is inserted, an incorrect board is inserted, or an insane board is inserted. 1. Check to ensure that the board translations are correct. Use the **list config** command, and resolve any problems that are found. 2. If the board was found to be correctly inserted in step 1, issue the **busyout board** command. 3. Issue the **reset board** command. 4. Issue the **release busy board** command. 5. Issue the **test board long** command. This should re-establish the linkage between the internal ID and the port. If this is not the case, dispatch to check to ensure that there is a valid board inserted.

Hybrid Line Remote Digital Loop Around Test (#59)

This test checks the digital control pair from the port circuit to the terminal. The on-board microprocessor sends a message to the terminal and checks for a proper return message. This test is repeated three times, with two out of the three attempts passing being sufficient for this test to pass. This testl runs if the station is in-service or out-of-service.

Table 3-181. TEST #59 Hybrid Line Remote Digital Loop Around Test

Error Code	Test Result	Description/ Recommendation
	ABORT	Internal system error 1. Retry the command at 1-minute intervals for a maximum of 5 times.

Continued on next page

Table 3-181. TEST #59 Hybrid Line Remote Digital Loop Around Test — *Continued*

Error Code	Test Result	Description/ Recommendation
1	ABORT	A request for a remote station audit aborted even though all internal resources were correctly allocated. 1. Look in the error log for error type 18 (port busied out) for this port. If this error type is present, release the port via the **release port PCSSpp** command or the **release station extension** command, and then run the test again. 2. Make sure that the terminal is connected. 3. Retry the command at 1-minute intervals for a maximum of 5 times.
1000	ABORT	System resources required to run this test are not available. The port may be busy with a valid call. Use the **display port PCSSpp** command to determine the station extension number of the port. Use the **status station** command to determine the service state of the port. If the service state indicates that the port is in use, then the port is unavailable for certain tests. You must wait until the port is idle before retesting. Attendants are always in use (off-hook) if the handset is plugged in and the port is not busied out. 1. If the port status is idle, then retry the command at 1-minute intervals a maximum of 5 times.
2000	ABORT	Response to the test request was not received within the allowable time period. 1. Retry the command at 1-minute intervals a maximum of 5 times.
1,2,3	FAIL	No response was received within the allowable time period on one of the transmissions to the terminal. This indicates that something is wrong with the data link to the voice terminal. This could be a sleeping set problem or it may be due to wiring or an unplugged or defective set. 1. Check for errors in the error log, for example, error 1537. 2. Remotely issue the **busyout** and **release busy** commands, and run the short test sequence on the port to check for other errors associated with the port or terminal. 3. Check the wiring to the set if it appears that the terminal is not responding to any tests; otherwise, replace the terminal and rerun the test. 4. If the test still fails, replace the circuit pack and reconnect the original terminal.
	PASS	Hybrid Line Remote Digital Loop Around Test passed. The hybrid circuit pack is sending and receiving proper messages to and from the voice terminal. 1. If problems still exist, investigate using other circuit pack tests and by examining the station, wiring, and connections.

Continued on next page

Table 3-181. TEST #59 Hybrid Line Remote Digital Loop Around Test — *Continued*

Error Code	Test Result	Description/ Recommendation
0	NO BOARD	The test could not relate the internal ID to the port (no board). This could be due to incorrect translations, no board is inserted, an incorrect board is inserted, or an insane board is inserted. 1. Check to ensure that the board translations are correct. Use the **list config** command, and resolve any problems that are found. 2. If the board was found to be correctly inserted in step 1, issue the **busyout board** command. 3. Issue the **reset board** command. 4. Issue the **release busy board** command. 5. Issue the **test board long** command. This should re-establish the linkage between the internal ID and the port. If this is not the case, dispatch to check to ensure that there is a valid board inserted.

Hybrid Line Lamp Updates Test (#60)

For this test, the software lights the lamps on the terminal based on the status record contained in the processor. The lamp updates run only if the station is in-service.

Table 3-182. TEST #60 Hybrid Line Lamp Updates Test

Error Code	Test Result	Description/ Recommendation
1	ABORT	A request for a remote station lamp update aborted even though all internal resources were correctly allocated. 1. Look in the error log for error type 18 (port busied out) for this port. If this error type is present, release the port via the **release port PCSSpp** command or the **release station extension** command, and then run the test again. 2. Make sure that the terminal is connected. 3. Retry the command at 1-minute intervals for a maximum of 5 times.
2	ABORT	Internal system error 1. Retry the command at 1-minute intervals a maximum of 5 times.

Continued on next page

Table 3-182. TEST #60 Hybrid Line Lamp Updates Test — *Continued*

Error Code	Test Result	Description/ Recommendation
3	ABORT	The station is in a ready for service or an out of service state. This may be due to wiring or an unplugged or defective set. 1. Make sure terminal is connected and the wiring is correct. 2. Retry the command at 1-minute intervals a maximum of 5 times.
1000	ABORT	System resources required to run this test are not available. The port may be busy with a valid call. Use the **display port PCSSpp** command to determine the station extension number of the port. Use the **status station** command to determine the service state of the port. If the service state indicates that the port is in use, then the port is unavailable for certain tests. You must wait until the port is idle before retesting. Attendants are always in use (off-hook) if the handset is plugged in and the port is not busied out. 1. If the port status is idle, then retry the command at 1-minute intervals a maximum of 5 times.
	FAIL	Internal system error 1. Retry the command at 1-minute intervals a maximum of 5 times.
	PASS	Hybrid Line Lamp Updates completed successfully. 1. If complaints still exist, investigate by using other circuit pack tests, and by examining the station, wiring, and connections.
0	NO BOARD	The test could not relate the internal ID to the port (no board). This could be due to incorrect translations, no board is inserted, an incorrect board is inserted, or an insane board is inserted. 1. Check to ensure that the board translations are correct. Use the **list config** command, and resolve any problems that are found. 2. If the board was found to be correctly inserted in step 1, issue the **busyout board** command. 3. Issue the **reset board** command. 4. Issue the **release busy board** command. 5. Issue the **test board long** command. This should re-establish the linkage between the internal ID and the port. If this is not the case, dispatch to check to ensure that there is a valid board inserted.

Hybrid Line Audits Test (#61)

This is a series of three tests that are classified as audits. These audits abort if attempted on an out-of-service station. The tests are as follows:

- Switchhook Audit - This is an update of the SPE records according to the circuit packs' records.
- Bad Scan Inquiry - A message is sent uplink that contains a count that is generated due to certain events relating to the data link conditions. This is an indication of data transmission problems between the Hybrid circuit pack and the voice terminal.
- EPF Inquiry - The status of the Electronic Power Feed is sent uplink. Possible conditions are: EPF-on-ok, EPF-off, EPF-no-load, and EPF-on-overcurrent.

Table 3-183. TEST #61 Hybrid Line Audits Test

Error Code	Test Result	Description/ Recommendation
	ABORT	Internal System Error
1	ABORT	The test was aborted due to an internal system error during the switchhook audit.
2	ABORT	Internal System Error occurred during bad scan inquiry audit. 1. Make sure that the station is not in an out of service state. 2. Retry the command at 1-minute intervals a maximum of 5 times.
3	ABORT	This port may have been busied out by system technician. 1. Look in the Error Log for Error Type 18 (port busied out) for this port. If this error type is present, the release the port via the **release station *<extension>*** command and run the test again. 2. Make sure that the terminal is connected. 3. Retry the command at 1-minute intervals a maximum of 5 times.
1000	ABORT	System resources required to run this test are not available. The port may be busy with a valid call. Use the **display port PCSSpp** to determine the station extension number of the port. Use the **status station** command to determine the service state of the port. If the service state indicates that the port is in use, then the port is unavailable for certain tests. You must wait until the port is idle before retesting. Attendants are always in use (off-hook), if the handset is plugged in and the port is not busied out. 1. If the port status is idle, then retry the command at 1-minute intervals a maximum of 5 times.

Continued on next page

Table 3-183. TEST #61 Hybrid Line Audits Test — *Continued*

Error Code	Test Result	Description/ Recommendation
1004	ABORT	The port was seized by a valid call during the test. The test has been aborted. Use the **display port PCSSpp** command to determine the station extension number of the port. Use the **status station** command to determine the service state of the port. If the service state indicates that the port is in use, then the port is unavailable for certain tests. You must wait until the port is idle before retesting. Attendants are always in use (off-hook), if the handset is plugged in and the port is not busied out. 1. Retry the command at 1-minute intervals a maximum of 5 times.
2000	ABORT	Response to the test request was not received within the allowable time period.
	FAIL	Internal system error 1. Retry the command at 1-minute intervals a maximum of 5 times.
	PASS	Hybrid Line Audits Test passed. 1. Although this test always return a PASS result, it may enter Error Types 257 or 513 into the Error Log. To determine if there are any problems that don't show up in the test result, look for these error types in the Error Log. 2. If these errors appear in the Error Log, or if user complaints still exist, investigate by using other circuit pack tests, and by examining the station, wiring, and connections.
0	NO BOARD	The test could not relate the internal ID to the port (no board). This could be due to incorrect translations, no board is inserted, an incorrect board is inserted, or an insane board is inserted. 1. Check to ensure that the board translations are correct. Use the **list config** command, and resolve any problems that are found. 2. If the board was found to be correctly inserted in step 1, issue the **busyout board** command. 3. Issue the **reset board** command. 4. Issue the **release busy board** command. 5. Issue the **test board long** command. This should re-establish the linkage between the internal ID and the port. If this is not the case, dispatch to check to ensure that there is a valid board inserted.

Hybrid Line Ringer Update Test (#62)

In this update, a "ringer on" or a "ringer off" message is sent to the firmware to start and stop the ringer on the set.

Table 3-184. TEST #62 Hybrid Line Ringer Update Test

Error Code	Test Result	Description/ Recommendation
3	ABORT	This port may have been busied out by system technician. 1. Look in the Error Log for Error Type 18 (port busied out) for this port. If this Error Type is present, the release the port via the **release station *<extension>*** command and run the test again. 2. Make sure that the terminal is connected. 3. Retry the command at 1-minute intervals a maximum of 5 times.
1000	ABORT	System resources required to run this test are not available. The port may be busy with a valid call. Use the **display port PCSSpp** command to determine the station extension number of the port. Use the **status station** command to determine the service state of the port. If the service state indicates that the port is in use, then the port is unavailable for certain tests. You must wait until the port is idle before retesting. Attendants are always in use (off-hook), if the handset is plugged in and the port is not busied out. 1. If the port status is idle, then retry the command at 1-minute intervals a maximum of 5 times.
	FAIL	Internal system error 1. Retry the command at 1-minute intervals a maximum of 5 times.
	PASS	Hybrid Station Ringer Update passed 1. If complaints still exist, investigate using other circuit pack tests on this circuit pack, and by examining the terminal, wiring, and connections.
0	NO BOARD	The test could not relate the internal ID to the port (no board). This could be due to incorrect translations, no board is inserted, an incorrect board is inserted, or an insane board is inserted. 1. Check to ensure that the board translations are correct. Use the **list config** command, and resolve any problems that are found. 2. If the board was found to be correctly inserted in step 1, issue the **busyout board** command. 3. Issue the **reset board** command. 4. Issue the **release busy board** command. 5. Issue the **test board long** command. This should re-establish the linkage between the internal ID and the port. If this is not the case, dispatch to check to ensure that there is a valid board inserted.

INADS (INADS Link)

MO Name (in Alarm Log)	Alarm Level	Initial Command to Run	Full Name of MO
INADS	none	test inads-link	INADS Link

The INADS Link MO represents the software and communications link required by the switch to make a call to the Initialization and Administration System (INADS). The purpose of the INADS Link MO is to check the communications link between the DEFINITY Generic 1 and INADS and verify that the alarm notification process works correctly. An INADS technician can test the process remotely to verify that alarms are reported to INADS, or a system technician may want to test the connection while on-site at installation time or during subsequent service calls.

Although the INADS Link MO is never alarmed, the errors are logged. The errors are only logged as a result of the **test inads-link** command being issued.

Error Log Entries and Test to Clear Values

The Hardware Error Log entries are described as part of the INADS Link Test description.

Short and Long Test Sequences

The **test inads-link** command is different from other test commands. This command does not have a long or short option, and the test on the INADS Link does not have an associated test number. When the **test inads-link** command is issued, the user immediately sees either the `Command successfully completed` or `Command failed` message.

INADS Link Test (no test number)

The INADS Link Test attempts to place a call to INADS (in the background) to verify the communications link to INADS. When the **test inads-link** command is issued, the user immediately sees either the `Command successfully completed` or `Command failed` message. When a previously run command is entered, the user immediately sees either `Command successfully completed` or `Command failed`. The `Command failed` message appears when a previously run **test inads-link** command is in progress or the system has active alarms which must be reported to INADS. The `Command successfully completed` means the switch will start the attempt to call INADS in two minutes (the test still runs even if Alarm Origination is disabled). The two-minute delay allows a remote INADS technician time enough to hang up the call and thus free up the INADS line so that the switch can call INADS back. As error conditions are encountered, errors are logged against INADS. Error codes 1 through 9 can be

logged if the test result was `Command successfully completed` and Error Codes 10 and 11 can be logged if the test result was `Command failed`. An error is also logged against INADS if the call to INADS finally succeeds. The INADS software (release 3.2 or later) recognizes this special "test inads" type of alarm and automatically opens and then closes a trouble ticket which indicates that the reason for the trouble ticket is a command is in progress or the system has active alarms which must be reported to INADS. The `Command successfully completed` means the switch will start the attempt to call INADS in two minutes (the test still runs even if Alarm Origination is disabled). The two-minute delay allows a remote INADS technician time enough to hang up the call and thus free up the INADS line so that the switch can call INADS back. As error conditions are encountered, errors are logged against INADS. Error codes 1 through 9 can be logged if the test result was `Command successfully completed` and Error Codes 10 and 11 can be logged if the test result was `Command failed`. An error is also logged against INADS if the call to INADS finally succeeds. The INADS software (release 3.2 or later) recognizes this special "test inads" type of alarm and automatically opens and then closes a trouble ticket which indicates that the reason for the trouble ticket is a **test inads-link** command. The trouble ticket alarm contains a `TESTING INADS LINK` description field.

After entering the command, it may take as long a nine minutes for the switch to place the call and for INADS to respond. The Error Log should be examined (use the category **inads**) 10 minutes after successfully entering the command to determine if the call was successful.

Use Table 3-185 to interpret the Error Log entries.

Table 3-185. INADS Link Error Log Entries Test

Error Code	Test Result	Description/ Recommendation
1	0	The call was successfully placed to INADS. No trouble found.
2	0	Informative error indicating that alarm origination was disabled at the time of the test. The test runs even if alarm origination is disabled. 1. If Alarm Origination is desired, then enable this feature with the Maintenance-Related System Parameters Form. 2. Repeat the test.
3	0	The INADS connection is currently in use. 1. Wait 10 minutes and retry this command.

Continued on next page

Table 3-185. INADS Link Error Log Entries Test — *Continued*

Error Code	Test Result	Description/ Recommendation
4	0	INADS did not answer the alarm origination call. 1. Verify INADS is up and running. 2. Verify the INADS phone number and switch product ID are correct via the Maintenance-Related System Parameters Form. 3. Enable alarm origination via the Maintenance-Related System Parameters Form and test the PR-MAINT (Maintenance/Tape Processor) by issuing the **test processor a|b** command. If PR-MAINT Tests #102 and #103 do not pass, then refer to "PR-MAINT (Maintenance Processor)" Maintenance documentation. 4. Retry the command.
5	0	No INADS phone number administered. 1. Administer the INADS phone number via the Maintenance-Related System Parameters Form. 2. Retry the command.
6	0	INADS did not send the acknowledgment message to the "test inads alarm" message. 1. Verify the INADS phone number and switch product id are correct via the Maintenance-Related System Parameters Form. 2. Verify INADS is up and running. 3. Retry the command.
7	0	INADS sent a negative acknowledgment to the "test inads alarm" message.
8	0	Internal system error; system received an invalid return code.
9	0	Internal system error 1. Try the command again at 1-minute intervals up to 5 times.
10	0	There is already a **test inads-link** command in progress. 1. Wait 10 minutes for the present command to finish. 2. Review the results of the present command by viewing the Error Log and selecting the category "inads-link."
11	0	The switch is trying to report alarms to INADS. The test cannot be run at this time. 1. Wait 10 minutes and retry the command.

IO-PROCR (I/O Processor)

MO Name (in Alarm Log)	Alarm Level	Initial Command to Run	Full Name of MO
IOP	MAJOR	reset io-processor	I/O PROCR

The I/O Processor includes the I/O Processor CPU, memory, a real-time operating system, and a driver. Together they support the Data Channel data scanners and Packet Interface functions. The I/O Processor resides on the single TN798 Processor circuit pack in the system.

Error Log Entries and Test to Clear Values

Error Type	Aux Data	Associated Test	Alarm Level	On/Off Board	Test to Clear Value
0[1]	0	Any	MAJOR	ON	reset io-processor[2]
1 (a)	Any	None	MAJOR	ON	reset io-processor[2]
257 (b)	Any	None	MAJOR	ON	reset io-processor[2]
513 (c)	Any	None	MAJOR	ON	reset io-processor[2]

1. Indicates that an alarm was raised but an associated error was not entered into the hardware error log due to a momentary overload condition caused by a burst of hardware or software error reports. Run the long test sequence. Refer to the appropriate test descriptions for any failures and follow the recommended procedures.
2. An I/O Processor can only be reset if it has been taken out of service by background maintenance software.

Notes:

a. Error 1 occurs when background maintenance software has reset the I/O Processor as a fault recovery action. It is used to track the number of IOP resets, independent of whether or not the Reset test passed. Once three of these errors have occurred in the last 15 minutes, maintenance places the I/O Processor in the out-of-service state, and a MAJOR on-board alarm is raised on the I/O Processor. When the I/O Processor has been taken out-of-service, the Packet Interface and Data Channels are also taken out-of-service.

   1. Check to see if error codes 257 or 513 are present in the hardware error log. If one or more of those error codes are present, refer to the information associated with those errors for the appropriate repair procedures.

2. If no other I/O Processor errors appear in the error log, and if the I/O Processor is not in a held reset state as indicated by the absence of a MAJOR alarm with a Service State of OUT, no action should be taken.

b. Error 257 indicates that an in-line error (IOP System Error) has been reported by I/O Processor firmware. When this error counter is active, the error count is decremented by 1 every 15 minutes, but only if the I/O Processor has not been reset three times by background maintenance. If the threshold is exceeded, a MAJOR alarm is raised. Execute a demand reset by entering **reset io-processor** and refer to the repair procedures for Test # 704.

c. Error 513 indicates that an in-line error (IOP Handshake Failure) has been reported by I/O Processor driver when the driver is unable to check the sanity of the firmware. When this error counter is active, the error count is decremented by 1 every 15 minutes, but only if the I/O Processor has not been reset three times by background maintenance. If the threshold is exceeded, a MAJOR alarm is raised. Execute a demand reset by entering **reset io-processor** and refer to the repair procedures for Test # 704.

System Technician-Demanded Tests: Descriptions and Error Codes

The I/O Processor support both the Data Channel data scanners and Packet Interface functions. Running the I/O Processor Reset Test is as though both the Data Channel Reset Test and Packet Interface Reset Test are executed along with a reset of the I/O Processor CPU, memory, and real time operating system.

Order of Investigation	Reset Sequence	D/ND[1]
I/O Processor Demand Reset (#704)	X	D

1. D = Destructive; ND = Nondestructive

Demand Reset Test (#704)

This test is destructive.

This action initializes the I/O Processor, and the firmware runs a comprehensive set of diagnostic tests. This action will abort if the I/O Processor is in the in-service state. The I/O Processor is put in the out-of-service state automatically if it has been reset three times by background maintenance within the last 15 minute, independent of the reset action.

Table 3-186. TEST #703 Demand Reset Test

Error Code	Test Result	Description/ Recommendation
1362	ABORT	The test is not allowed to run because the I/O Processor is in-service. Running this test is not allowed because it is destructive. 1. Use the **display alarms** command to determine the service state of the I/O Processor. If the state is OUT, try the reset command again.
2000	ABORT	Response to the test request was not received within the allowable time period. 1. Retry the command at 1-minute intervals, a maximum of 3 times.
Any	FAIL	The I/O Processor diagnostic tests failed. 1. Retry the command. 2. If the reset fails, replace the Processor circuit pack.
	PASS	The I/O Processor diagnostic tests passed.

ISDN-PLK (ISDN-PRI Signaling Link Port)

MO Name (in Alarm Log)	Alarm Level	Initial Command to Run[1]	Full Name of MO
ISDN-PLK[2]	MINOR	test port PCSSpp l	ISDN-PRI Signaling Link Port
ISDN-PLK	WARNING	test port PCSSpp sh	ISDN-PRI Signaling Link Port

1. Where 'pp' is '24' for 24-channel interfaces, and '16' for 32-channel interfaces.
2. For additional repair information, see also PKT-CTRL (Packet Control), DS1-BD (DS1 Interface Circuit Pack) or UDS1-BD (Universal DS1 Interface Circuit Pack).

The ISDN-PRI Signaling Link Port is the port on a TN464C or later UDS1 Interface circuit pack that carries D-channel messages to the processor. The ISDN-PRI interface uses out-of-band signaling as opposed to robbed-bit, in-band signaling. This port can be used as an interface to the TDM bus or to the Packet bus.

The B-channels associated with a ISDN-PRI D-channel can use ports on the same circuit pack or ports on other TN464C or later or TN767 DS1 Interface circuit packs (The TN722 cannot be used for this application.)

In a 32-channel system (see Figure 3-13), the DS1 ISDN Trunk or PRI endpoint port (B-channels) may use any of the ports 1-15 or 17-31, but the ISDN-PRI Signaling Link Port must be the 16th port on the TN464C (or higher) circuit pack. In certain configurations (NFAS), the 16th port may be used as a B-channel. Refer to the "ISDN-SGR (ISDN-PRI Signaling Group)" Maintenance documentation for further details.

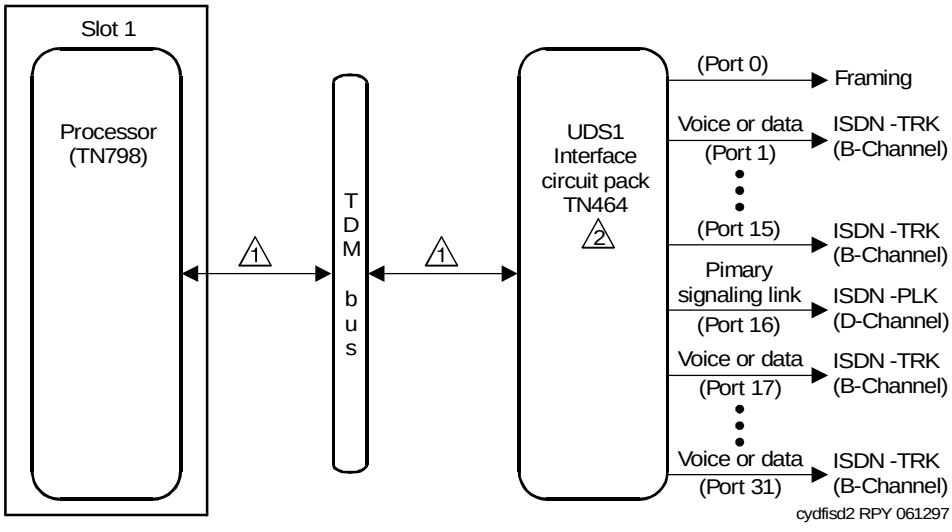

Figure Notes

1. B- and D-channel messages are routed over the TDM Bus. For additional reliability, a duplex D-channel can be administered for a signaling group and located on a different TN464C (or higher) circuit pack.
2. TN464C or higher

Figure 3-13. ISDN-PRI Signaling Link Port Interactions (32-Channel - TN464)

The TN767 DS1 interface is used for 24 channel 1.544 Mbps systems. The TN464C or later can be used for either 24 or 32 channel systems. The 32-channel (31 DS0 channels + 1 framing channel on a 2.048 Mbps link) are only supported on TN464 series circuit packs. A description of these circuit packs appears in DS1-BD or UDS1-BD maintenance documentation.

In a 24-channel system, the DS1 ISDN Trunk or PRI endpoint port (B-channels) may use any of the first 23 ports. The ISDN-PRI Signaling Link Port must be the 24th port (See Figure 3-14). In certain configurations (NFAS), the 24th port may be used as a B-channel. Refer to the ISDN-PRI Signaling Group (ISDN-SGR) Maintenance documentation for further details.

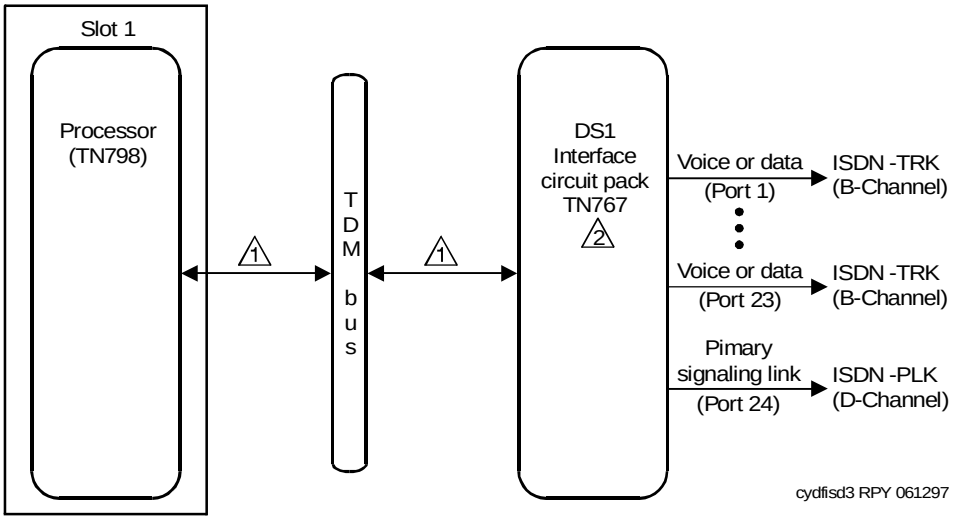

Figure Notes

1. B- and D-channel messages are routed over the TDM Bus. For additional reliability, a duplex D-channel can be administered for a signaling group and located on a different TN464C (or higher) circuit pack.
2. TN767B (or higher) or TN464C (or higher)

Figure 3-14. ISDN-PRI Signaling Link Port Interactions (24 Channel - TN767/464C)

ISDN-PLK handles maintenance and recovery for the D-channel port on the DS1 carrying the signaling link. A problem with the ISDN-PRI Signaling Link Port (D-channel) has an effect on all of the associated DS1 ISDN Trunks or PRI endpoint ports (B-channels) since no call control information can be conveyed to the far-end switch or Terminal Adapter without it. Stable calls may remain operational, but no new calls can be made.

If there are problems with the ISDN-PLK, also investigate the TN464 UDS1 interface circuit pack (UDS1-BD).

Error Log Entries and Test to Clear Values

Table 3-187. ISDN-PRI Signaling Link Port Error Log Entries

Error Type	Aux Data	Associated Test	Alarm Level	On/Off Board	Test to Clear Value
0[1]	0	Any	Any	Any	test port PCSSpp[2]
18(a)	0	busyout port PCSSpp*	WARNING	OFF	release port PCSSpp[2]
130 (b)		None	WARNING	ON	test port PCSSpp[2]
1537 (c)	46210		WARNING	OFF	
1793 (d)					test board PCSSpp[2]1
3585 (e)	46222		MINOR	ON	
3841 (f)	46211				
3842 (g)	46223				

1. Run the short test sequence first. If all tests pass, run the long test sequence. Refer to the appropriate test description and follow the recommended procedures.
2. pp is 24-channel interfaces and 16 for 32-channel interfaces.

Notes:

a. The D-channel is demand busied out. No calls can be made over this D-channel.

b. This error type indicates that the circuit pack has been removed or has been insane for more than 11 minutes. To clear the error, reinsert or replace the circuit pack.

c. Link error. This error occurs when the port receives an invalid frame over the D-channel. This error normally indicates an off-board problem usually related to transmission errors on the DS1 facility. Execute the **list measurements ds1-log** command for the UDS1 TN464 circuit pack on which the D-channel resides. If the UDS1 is reporting some errors, then the DS1 facility has experienced transmission problems which could have caused the ISDN-PLK to report a Link Error. If the UDS1 is not reporting errors, execute the long test sequence for the D-channel (ISDN-SGR). Investigate any errors, if there are none execute a long test sequence for the UDS1 circuit pack (UDS1-BD) and investigate any errors.

   If no errors are reported, the Link Error is probably not affecting service.

d. The UDS1 Interface circuit pack is out-of-service. Look for and resolve UDS1-BD errors in the Hardware Error Log.

e. Transmit FIFO Overflow error. This error indicates that the circuit pack is having problems transmitting signaling information over the D-channel. This condition probably indicates a hardware problem.

The actual alarming level depends on the options chosen via the **set options** command on the G3-MT terminal. ISDN-PRI Signaling Link Port alarms are treated as Station alarms, and their default alarming option is to downgrade all alarms to Warning. The value shown in the preceding table indicates the normal, unfiltered case (option "y" on the *Set Options* form).

f. Bad DLCI error. This error occurs when a LAPD frame is received across the DS1 facility which contains a DLCI which does not have a valid entry in the on-board translation memory. This error normally indicates an off-board problem usually related to a broken endpoint or a state mismatch between a remote endpoint and the local call processing software. Maintenance will not start any testing or generate any alarms in response to this error.

g. Receive FIFO Overflow error. This error occurs when the circuit pack detects an overflow of its receive buffers. If it occurs frequently, it may indicate a LAPD parameter mismatch between the two endpoints. Maintenance does not start any testing or generate any alarms in response to this error.

System Technician-Demanded Tests: Descriptions and Error Codes

Always investigate tests in the order presented in the table below when inspecting errors in the system.

NOTE:
The command line entry to test the ISDN-PLK MO is: **test port PCSSpp (sh or l)**, where ‘pp’ is ‘24’ for 24-channel interfaces, and ‘16’ for 32-channel interfaces.

Order of Investigation	Short Test Sequence	Long Test Sequence	D/ND[1]
Signaling Link Board Check (#643)	X	X	ND

1. D = Destructive; ND = Nondestructive

Signaling Link Board Check (#643)

This test checks the state of the UDS1 Interface circuit pack (TN464C or later) transporting the ISDN-PRI Signaling Link.

Table 3-188. TEST #643 Signaling Link Board Check

Error Code	Test Result	Description/ Recommendation
	ABORT	Internal system error 1. Retry the command at 1-minute intervals a maximum of 5 times.
1700	ABORT	Rollabout video abort. The PRI terminal adapter associated with this D-channel port is detached from the circuit pack. This is a normal abort when the rollabout video feature is enabled. To complete test on this port, either: 1. Re-attach the disconnected PRI terminal adapter and retry test command, or 2. Disable the rollabout video feature on this circuit pack by entering **change ds1 PCCSS** and set the field `Alarm when PRI Endpoint Detached?` to **y**.
8	FAIL	The UDS1 circuit pack (TN464C or later) is not in-service. 1. Check the Hardware Error Log for entries logged against UDS1-BD and consult the UDS1-BD (UDS1 Interface Circuit Pack) Maintenance documentation for repair procedures.
	PASS	The UDS1 Interface circuit pack transporting the ISDN-PRI Signaling Link Port is in-service.

ISDN-SGR (ISDN-PRI Signaling Group)

MO Name (in Alarm Log)	Alarm Level	Initial Command to Run[1]	Full Name of MO
ISDN-SGR	MINOR	test sig-group <group>	ISDN-PRI Signaling Group
ISDN-SGR	WARNING	test sig-group <group>	ISDN-PRI Signaling Group

1. Where <group> is a number 1-8 and the test sequence can be either s (short) or l (long).

An ISDN-PRI Signaling Group is a collection of DS1/UDS1 ISDN Trunks or PRI endpoint ports (B-channels) for which a given ISDN-PRI Signaling Link Port (D-channel) carries signaling information. ISDN-PRI requires the use of one of the following DS1 interface circuit packs:

TN767B or later 24-channel with ISDN-PRI D-channel over PI-BD

TN464C or later 24- or 32-channel with ISDN-PRI D-channel over PI-BD

See DS1-BD and UDS1-BD Maintenance documentation for a description of these circuit packs. See *DS1/CEPT1/ISDN-PRI Reference*, 555-025-101, for more information on ISDN.

For 24-channel interfaces, the first 23 ports on the circuit pack are used as B-channels. The 24th port may be used as a B-channel or as a D-channel depending on the type of Signaling Group used (see Figure 3-15).

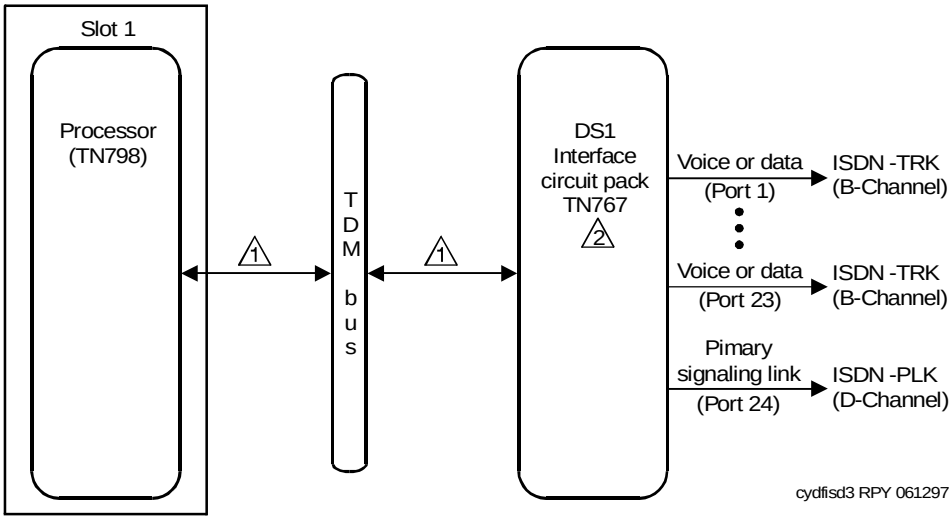

Figure Notes

1. B- and D-channel messages are routed over the TDM Bus. For additional reliability, a duplex D-channel can be administered for a signaling group and located on a different TN464C (or higher) circuit pack.
2. TN767B (or higher) or TN464C (or higher)

Figure 3-15. ISDN-PRI Signaling Link Port Interactions (24 Channel - TN767/464C)

For 32-channel interfaces, ports 1-15 and 17-31 on the circuit pack are used as B-channels. The 16th port may be used as a B-channel or as a D-channel depending on the type of Signaling Group used (see Figure 3-16).

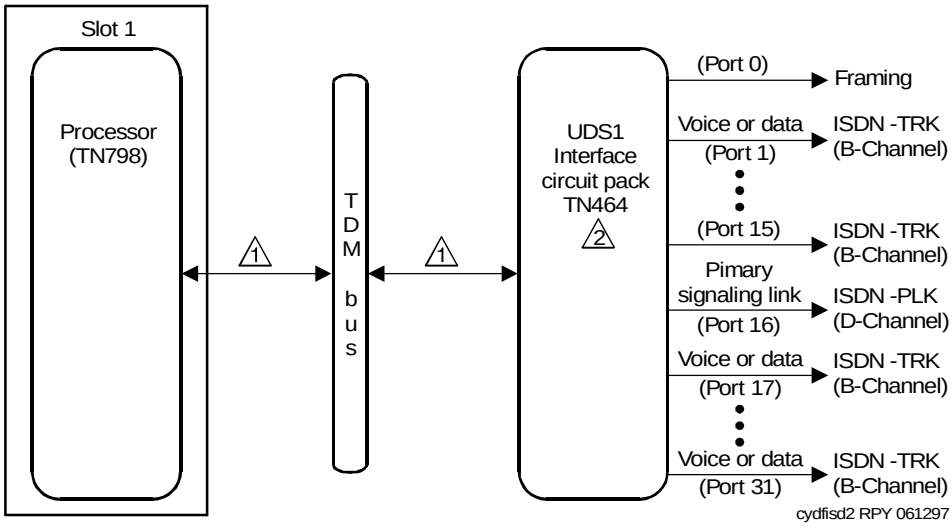

Figure Notes

1. B- and D-channel messages are routed over the TDM Bus. For additional reliability, a duplex D-channel can be administered for a signaling group and located on a different TN464C (or higher) circuit pack.
2. TN464C or higher

Figure 3-16. ISDN-PRI Signaling Link Port Interactions (32-Channel - TN464)

There are two types of Signaling Groups:

- Facility Associated Signaling (FAS) (supported by all country protocols)
- Non-Facility Associated Signaling (NFAS) (supported by country protocol 1 only)

In an FAS Signaling Group, the 24th port of the DS1 Interface circuit pack (for 24 channel interfaces) or the 16th port of the DS1 Interface circuit pack (for 32 channel interfaces) is always the D-channel that carries signaling information for the other ports (B-channels) on the circuit pack. If a Packet Control circuit pack is used then only the TN464C or later circuit pack may be used.

In an NFAS Signaling Group, the 24th port of a DS1 Interface circuit pack (for 24 channel interfaces) or the 16th port of a DS1 Interface circuit pack (for 32

channel interfaces) is administered as a D-channel. The D-channel carries signaling information for the other ports (B-channels) on that circuit pack. That D-channel can also carry signaling information for any of the ports on other DS1 Interface circuit packs in the NFAS Signaling Group. As a result, the 24th port on other 24-channel DS1 Interface circuit packs and the 16th port on other 32-channel DS1 Interface circuit packs can be used as B-channels. A D-channel in an NFAS Group can signal for B-channels on a total of 20 DS1 Interface circuit packs. This configuration is known as NFAS Simplex.

In addition to NFAS Simplex, there is another type of NFAS Group called NFAS Duplex. This provides the user with more reliability, which is desirable because NFAS permits the D-channel to signal for so many B-channels. NFAS Duplex allows the administration of a backup D-channel, which remains in a Standby state until the Active D-channel goes down. If the Active D-channel does go down, the backup D-channel takes over and provides signaling for all the B-channels in the signaling group.

The ISDN-PRI Signaling Group itself depends on three other entities: the DS1 Interface circuit pack on which the D-channel(s) resides, the ISDN-PRI Signaling Link Port(s), and the Processor Interface Link that provides connectivity to the processor. If there are any problems with the ISDN-PRI Signaling Group, also investigate the ISDN-PRI Signaling Link Port(s), the DS1 Interface circuit pack(s).

Error Log Entries and Test to Clear Values

Table 3-189. ISDN-PRI Signaling Group Error Log Entries

Error Codes	Aux Data	Associated Test	Alarm Level	On/Off Board	Test to Clear Value
0[1]	0	Any	Any		test sig-group <group>
1 (a)	Any	none			
257 (b)	Any	none			test sig-group <group>
513 (c)	Any	none			test sig-group <group>
769	Any	Primary Signaling Link Hardware Check (#636)			test sig-group <group>
1025	Any	Secondary Signaling Link Hardware Check (#639)			test sig-group <group>
1793 (d)	Any	Layer 2 Status (Test #647)	WARNING	OFF	test sig-group <group>
2049 (e)	Any	Layer 2 Status (Test #647)	WARNING	OFF	test sig-group <group>
2305 (f)	Any	Remote Layer 3 Query (Test #637)	MINOR	OFF	test sig-group <group>
3585 (g)	port number	none			none
3840-3928 (h)	port number				none

1. Run the Short or Long Test Sequence. Refer to the appropriate test description and follow the recommended procedures.

Notes:

a. This switch sent a message to the far-end switch or terminal adapter, and the far-end did not respond in the allotted time. Possible causes include link failure and congestion or outage at the far-end. The Aux Data field contains Layer 3 protocol information used by internal counters.

   If no other symptoms are not present, no action is required. If Layer 3 communication is down, there should be indications in the form of alarms and errors for link components. Check out other errors against ISDN-SGR, ISDN-TRK, and other hardware components on the link.

There is no test to clear these errors. The error counter is decremented by 1 every 15 minutes.

b. This error indicates that the primary signaling channel connection has been lost for more than 90 seconds. If a secondary signaling channel does not exist or is not in-service, the associated B-channels will be placed in the ISDN Maintenance/Far-End state. The B-channels will not be usable for outgoing calls, although incoming calls will still be accepted. The switch will automatically attempt to recover the signaling link. Pay particular attention to the results of Test #636 (Primary Signaling Link Hardware Check) in the test sequence. When the link does recover, the B-channels will be negotiated back to the In-Service state and their alarms will be retired.

   When this error occurs, the state of the Signaling Group is changed to out-of-service (verify using the **status sig-group** command).

c. This error indicates that the secondary signaling channel connection has been lost for more than 90 seconds. If the primary signaling channel is not in-service, B-channels will be placed in the ISDN Maintenance/Far-End state. The B-channels will not be usable for outgoing calls, although incoming calls will still be accepted. The switch will automatically attempt to recover the signaling link. Pay particular attention to the results of Test #639 (Secondary Signaling Link Hardware Check) in the test sequence. When the link does recover, the B-channels will be negotiated back to the In-Service state and their alarms will be retired.

   When this error occurs, the state of the Signaling Group is changed to out-of-service (verify using the **status sig-group** command).

d. This error indicates a failure of the Layer 2 Status Query Test for the primary signaling channel

e. This error indicates a failure of the Layer 2 Status Query Test for the secondary signaling channel.

f. A specific message was sent to the far-end switch, and it did not respond within the allotted time. Investigate elements of the ISDN PRI D-channel(s) (ISDN-LNK, ISDN-PLK, ISDN-SGRP, PKT-INT, PKT-CTRL) for both this switch and the Far-end switch. If Test #637 fails twice in a row, the B-channels will be alarmed and made unavailable for outgoing calls (although incoming calls will still be accepted). When Test #637 succeeds and the Far-end switch starts responding properly, the DS1 ISDN Trunk (B-channels) will be placed back into normal operation and their alarms will be retired.

g. A SERV or SERV ACK ISDN D-channel message has been received by a non-US-type interface (country option other than 1 on the DS1 administration form). However, these messages are used only for duplex NFAS signaling which is supported only by country protocol 1.

   Thus, there may be a mismatch in administration between the local and far-end switches. Consult with the customer’s network provider to determine whether the D-channel is set up correctly on the far-end switch.

h. These error codes are used to report certain error messages received by the ISDN-PRI Signaling Group for one of its associated B-channels. The aux data field shows for which B-channel (port number) the message was received.

The error code generated equals 3840+*x*, where *x* is a Cause Value defined by the ISDN PRI Specification. Note that there is no Test to Clear Value for these error types; selected ISDN cause values are placed in the log when they are received, but no direct action or alarming is performed solely in response to receiving them. They provide added data that may prove useful when tracking down obscure networking and routing problems. Table 3-190 provides more information:

Table 3-190. Descriptions of Error Codes 3840-3928

Error Code	Description	Recommendation
3842	A request has been made to use a transit network or common carrier that cannot be accessed.	1. From the circuit pack and port number (in the Aux Data field), determine the trunk group against which the error was reported. 2. Check all routing patterns containing this trunk group for validity of interexchange carriers requested (IXC field).
3846	The far-end switch has indicated that the B-channel (trunk) is not acceptable for use in the call for which it was requested.	This could indicate an administration problem (for example, the local switch and the far-end switch have different B-channels administered), or could reflect the occurrence of a normal race condition (for example, the local switch has requested use of a B-channel which the far-end switch had just reserved for use on another call). 1. From the circuit pack and port number (in the `Aux Data` field), determine the trunk group against which the error was reported. 2. Issue the **status trunk** command for the indicated trunk. 3. Refer to the "DS1 ISDN Trunk Service States" and "ISDN-PRI Trunk Service States" sections of ISDN-TRK for recovery suggestions.
3858	The switch sent an ISDN message to the far-end switch or terminal adapter which did not respond in the allotted time.	Possible causes include link failure and congestion or outage at the far-end.

Continued on next page

Table 3-190. Descriptions of Error Codes 3840-3928 — *Continued*

Error Code	Description	Recommendation
3878	The far-end switch has indicated that the network is not functioning correctly and that the condition may last a relatively long period of time (for example, immediately re-attempting the call may not be successful).	1. From the circuit pack and port number (in the Aux Data field, determine the trunk group against which the error was reported. 2. Consult with the network provider to determine the nature and expected duration of the out of service condition. 3. Consider modifying all routing patterns containing this trunk group, to route calls around the network which is out of service.
3890	A request to use a network service (e.g., SDN) has been denied. Administration somewhere on the network has indicated that the requested service has not been subscribed to or purchased for this trunk.	This could be a local administration problem only, or a mismatch between the local administration and that of the network provider. 1. From the circuit pack and port number (in the Aux Data field), determine the trunk group against which the error was reported. 2. Display the trunk group form: If the trunk group is Call-by-Call (Service Type is "cbc"), check all routing pattern forms containing this trunk group to see if the Service/Feature fields contain the correct network services purchased for this trunk. If the trunk group is not Call-by-Call, check that the Service Type field contains the single network service purchased for this trunk. 3. If local administration appears correct, consult with the customer and/or the network provider to determine the services that the customer has subscribed to for this trunk group.
3892	Protocol detail; may offer a clue if customer is having ISDN calls denied with an unexpected intercept tone.	If customer is complaining of unexpected intercept tones when accessing ISDN trunks or PRI endpoints and no other cause can be found, provide the next tier with this Error Log information.
3894	Protocol detail; may offer a clue if customer is having ISDN calls denied with an unexpected intercept tone.	First, eliminate any transitory state mismatch problems by issuing the **test port PCSSpp** command for the trunk port shown in the aux data field. Test #256 (Service State Audit) is the important test in the sequence. If this passes satisfactorily, yet the customer continues to complain of unexpected intercept tones when accessing ISDN trunks or PRI endpoints and no other cause can be found, provide the next tier with this Error Log information.

Continued on next page

Table 3-190. Descriptions of Error Codes 3840-3928 — *Continued*

Error Code	Description	Recommendation
3905	Protocol detail; may offer a clue if customer is having ISDN calls denied with an unexpected intercept tone.	If customer is complaining of unexpected intercept tones when accessing ISDN trunks or PRI endpoints and no other cause can be found, provide the next tier with this Error Log information.
3906	Protocol detail; may offer a clue if customer is having ISDN calls denied with an unexpected intercept tone.	If customer is complaining of unexpected intercept tones when accessing ISDN trunks or PRI endpoints and no other cause can be found, provide the next tier with this Error Log information.
3909	A request to use a network service has been made, but the network has rejected the request because the requested service is not implemented.	Follow the recommendations listed above for error type 3890.
3928	A call was denied because of a basic incompatibility between the type of call and either the facilities selected by the routing pattern or the called user itself.	This error might be helpful as a clue if the customer complains of receiving unexpected intercept tone after accessing ISDN trunks or PRI endpoints. Determine the trunk group from the circuit pack and port number (in the aux data field) and then check the BCC fields of the pertinent routing patterns. Also, investigate whether or not the calling and called endpoints are compatible (for example, some ISDN switches may not allow a voice station to call a data extension).

System Technician-Demanded Tests: Descriptions and Error Codes

Always investigate tests in the order presented in the table below. By clearing error codes associated with the *Primary Signaling Link Hardware Check*, for example, you may also clear errors generated from other tests in the testing sequence.

Table 3-191. System Technician-Demanded Tests: ISDN-SGR

Order of Investigation	Short Test Sequence	Long Test Sequence	D/ND[1]
Primary Signaling Link Hardware Check (#636)	X	X	ND
Secondary Signaling Link Hardware Check (#639)	X	X	ND
Layer 2 Query Test (#647)	X	X	ND
Remote Layer 3 Query Test (#637)	X	X	ND

1. D = Destructive, ND = Non-destructive

Primary Signaling Link Hardware Check (#636)

The ISDN-PRI Signaling Link Port itself depends on the health of the DS1/UDS1 Interface circuit pack on which it resides. This test will fail if there are problems with either the ISDN-PRI Primary D-channel port or the DS1/UDS1 circuit pack. See Figure 3-15 for DS1 connections, Figure 3-16 for UDS1 connections.

If there are problems with the ISDN-PRI Signaling Link, also investigate the DS1/UDS1 circuit pack (DS1-BD/UDS1-BD).

Table 3-192. TEST #636 Primary Signaling Link Hardware Check

Error Code	Test Result	Description/ Recommendation
	ABORT	Internal system error 1. Retry the command at 1-minute intervals a maximum of 5 times.

Continued on next page

Table 3-192. TEST #636 Primary Signaling Link Hardware Check — *Continued*

Error Code	Test Result	Description/ Recommendation
1700	ABORT	Rollabout video abort. The PRI terminal adapter associated with this D-channel port is detached from the circuit pack. This is a normal abort when the rollabout video feature is enabled. To complete test on this port, either: 1. Re-attach the disconnected PRI terminal adapter and retry test command, or 2. Disable the rollabout video feature on this circuit pack by entering **change ds1 PCSS** and set the field `Alarm when PRI Endpoint Detached?` to **y**.
8	FAIL	There is a problem with the DS1/UDS1 Circuit Pack, or the ISDN-PRI Signaling Channel (D-channel). No DS1 ISDN Trunk (B-channel) or wideband PRI Endpoint calls can be made until the problem is resolved. 1. Consult the procedures for DS1/UDS1 Circuit Pack and the ISDN-PRI Signaling Channel (ISDN-LNK/ISDN-PLK).
	PASS	The basic physical connectivity of the primary D-channel is intact and functional. Try this test repeatedly to ensure the link is up and to uncover any transitory problems.

Remote Layer 3 Query (#637)

This test will query the far-end switch or terminal adapter to determine if the signaling connection is functioning properly at Layer 3. It will select a B-channel in the in-service or maintenance service state and send an ISDN Layer 3 SERVice message, which requires a response from the far end (similar to performing Test #256 on an ISDN trunk. The test will not be performed if there are no B-channels in an appropriate ISDN service state (as when none are administered or they are all out of service).

NOTE:
The service state can be displayed by using the **status trunk <trunk group/trunk member>** or **status pri-endpoint** command.

As is the case with Test #256 for an ISDN trunk, a PASS only indicates that a message was composed and sent to the far-end switch or terminal adapter. The ISDN PRI Specification allows up to 2 minutes for a response. Check the Error Log for ISDN-SGR (ISDN-PRI Signaling Group) errors of type 2305 for evidence of a Remote Layer 3 Query failure.

Tests #639 and #636 check the health of the D-channels and DS1/UDS1 Interface Circuit Packs. As shown in the figures below, Test #637 goes one step further by checking the communication path from the processor over the TDM Bus, through the DS1/UDS1 Interface circuit pack, and on to the far-end switch or terminal adapter. A special ISDN message is sent to the far-end switch or terminal adapter, which must respond within a specified amount of time. This test is designed to ensure that the communication path between the switch and the far-end is up and operational, and that the two endpoints can properly exchange ISDN control messages.

See Figure 3-15 for DS1 connections, Figure 3-16 for UDS1 connections.

Table 3-193. TEST #637 Remote Layer 3 Query

Error Code	Test Result	Description/Recommendation
	ABORT	Internal system error 1. Retry the command at 1-minute intervals a maximum of 5 times.
1006	ABORT	This is a NORMAL ABORT. For country protocol 1 interfaces (including the USA), either there are no B-channels administered in this signaling group, or all B-channels in this signaling group are either out-of-service or are in a "pending" state (PINS or PMTC, indicating that a B-channel maintenance message for that B-channel has been sent and not yet acknowledged). 1. Administer an ISDN Trunk or PRI Endpoint Port (B-channel) in this signaling group, or use the **status trunk TRK-GRP/TRK** or **status pri-endpoint <extension>** command to check the state of the ISDN Trunks or PRI Endpoint Ports associated with this signaling group. Refer to ISDN-TRK or PE-BCHL for further details regarding service state definitions and transitions. For systems not using country protocol 1 interfaces, there are no B-channels administered in this signaling group.
1019	ABORT	There is already a Remote Layer 3 Query in progress. This is a normal ABORT. 1. Wait two minutes, then follow the procedures for when this test passes.
1113	ABORT	The Signaling Link is down. Therefore no messages can be sent to the Far-end switch. 1. Examine the results of Tests #636 and #639 and follow recommendations provided there. 2. If either test passes, it may be because the signaling link was disabled by system technician. Verify this by using the **display comm link** command. Tests #636 and #639 pass if the signaling link is not enabled.
2100	ABORT	Could not allocate the necessary system resources to run this test. 1. Retry the command at 1-minute intervals a maximum of 5 times.

Continued on next page

Table 3-193. TEST #637 Remote Layer 3 Query — *Continued*

Error Code	Test Result	Description/Recommendation
2500	ABORT	Same as ABORT with no error code. 1. Follow the recommendations for ABORT with no error code.
2500	FAIL	Same as ABORT with no error code. 1. Follow the recommendations for ABORT with no error code.
	PASS	A message was composed and sent to the Far-end switch. The ISDN PRI specification allows up to two minutes for a reply. 1. Check the Error Log for ISDN-SGR (ISDN-PRI Signaling Group) for errors of type 2305 for evidence of a Remote Layer 3 Query failure. If no new errors were logged since this test was run, then this switch and the Far-end switch processor can exchange call control messages. 2. If there is still a problem with a particular DS1 ISDN Trunk or PRI Endpoint Port (B-channel), busyout the trunk or port and run the long test sequence, paying particular attention to the results of Test #258 (ISDN Test Call).

Secondary Signaling Link Hardware Check (#639)

The ISDN-PRI Signaling Group D-Channel port depends on the health of the DS1/UDS1 Interface circuit pack on which it resides. This test will fail if there are problems with either the ISDN-PRI Primary D-channel port or the DS1/ UDS1 circuit pack. If there are problems with the ISDN-PRI Secondary Signaling Channel port (ISDN-PLK), also investigate the DS1/UDS1 circuit pack.

See Figure 3-15 for DS1 connections, Figure 3-16 for UDS1 connections.

Table 3-194. TEST #639 Secondary Signaling Link Hardware Check

Error Code	Test Result	Description/ Recommendation
	ABORT	Internal system error 1. Retry the command at 1-minute intervals a maximum of 5 times.
1132	ABORT	The Secondary D-channel is not administered for this Signaling Group. This is a NORMAL ABORT. Only a Primary D-channel must be administered for a Signaling Group.

Continued on next page

Table 3-194. TEST #639 Secondary Signaling Link Hardware Check — *Continued*

Error Code	Test Result	Description/ Recommendation
4	FAIL	There is a problem with the Processor Interface Link. No DS1 ISDN Trunk (B-channel) or Wideband PRI Endpoint calls can be made until the problem is resolved. 1. Display the Communication-Interface Links Form via the **display communication-interface** command to determine which link is down (find the one that matches the DS1 Interface circuit pack on which this ISDN-PRI Signaling Link Port resides) and then refer to the PKT-INT Maintenance documentation.
8	FAIL	There is a problem with the DS1/UDS1 Interface circuit pack or the ISDN-PRI Secondary Signaling channel (D-channel). No ISDN Trunk (B-channel) or Wideband PRI Endpoint calls can be made until the problem is resolved. 1. Refer to the DS1/UDS1 circuit pack and the ISDN-PRI Signaling channel (ISDN-LNK/ISDN-PLK) Maintenance documentation.
	PASS	The basic physical connectivity of the Signaling Group's Secondary D-channel is intact and functional. Try this test repeatedly to ensure the link is up and to uncover any transitory problems.

Layer 2 Status Test (#647)

The Layer 2 Status Test checks the layer 2 status of the ISDN-PRI Signaling Channel (D-channel). This test will fail if there is a hardware failure or a facility problem, or if the primary and secondary ISDN-PRI D-channels are not administered correctly.

The Primary and Secondary Signaling Link Hardware tests (test 636 and 639) and the Remote Layer 3 Query test (test 637) will detect most problems caused by hardware failures or incorrect administration. However, the Layer 3 test (test 637) cannot detect end-to-end transmission problems with the Standby D-channel since Layer 3 messages are not sent on the standby channel.

For G3r, the SYS-LINK Maintenance Object reports Layer 2 ISDN-PRI D-channel problems and for G3i/s/vs, the PKT-INT Maintenance Object reports Layer 2 ISDN-PRI D-channel problems (if the D-channel is connected to the Processor Interface circuit pack). However, the PKT-INT Maintenance Object does not monitor the Layer 2 status of the ISDN-PRI D-channel when the D-channel is connected to the Packet Control circuit pack for the ISDN-PRI over PACCON feature. The Layer 2 Query test is provided to detect D-Channel Layer 2 failures and generate an associated Warning alarm independent of the hardware configuration used for the D-channels.

Table 3-195. TEST #647 Layer 2 Status Query Test

Error Code	Test Result	Description/ Recommendation
1132	ABORT	Internal system error The port location for the primary ISDN-PRI D-channel is not known. This condition should not be possible since an administered DS1 circuit pack must be specified when a Signaling Group is administered: 1. Retry the command at 1-minute intervals a maximum of 5 times.
1134	ABORT	Internal system error The associated DS1 circuit pack is not administered. This condition should not be possible since an administered DS1 circuit pack must be specified when a Signaling Group is administered. 1. Retry the command at 1-minute intervals a maximum of 5 times.
2500	ABORT	Internal system error 1. Retry the command at 1-minute intervals a maximum of 5 times.
1	FAIL	Layer 2 of the primary signaling channel is down: 1. Examine the results of the Primary Signaling Link Hardware Test (#636) and follow recommendations provided there. 2. If test #636 passes, the Layer 2 Query test may still fail if the Signaling Channel at the far end has not been administered correctly or if it has been busied out. Verify that the Primary Signaling Channel (D-channel) at the far end has been administered correctly. Verify that the DS1 port used for the Primary D-channel has not been busied out at the far end.
2	FAIL	Layer 2 of the secondary signaling channel is down. 1. Examine the results of Secondary Signaling Link Hardware Test (#639) and follow recommendations provided there. 2. If tests #639 passes, the Layer 2 Query test may still fail if the Signaling Channel at the far end has not been administered correctly or if the Signaling Channel has been busied out. Verify that the Secondary Signaling Channel (D-channel) at the far end has been administered correctly. Verify that the DS1 port used for the Secondary D-channel has not been busied out at the far end.

Continued on next page

Table 3-195. TEST #647 Layer 2 Status Query Test — *Continued*

Error Code	Test Result	Description/ Recommendation
3	FAIL	Both the primary and secondary Channels are down. 1. Examine the results of the Primary and Secondary Signaling Link Hardware Tests (#636 and #639) and follow recommendations provided there. 2. If tests #636 and #639 pass, the Layer 2 Query test may still fail if the Signaling Channels at the far end has not been administered correctly or if the Signaling Channels have been busied out. Verify that the Primary and Secondary Signaling Channel (D-channels) at the far end have been administered correctly. Verify that the DS1 ports used for the Primary and Secondary D-channels have not been busied out at the far end.
	PASS	The Primary Signaling Channel is up and, if administered the Secondary Channel is up.

ISDN-TRK (DS1 ISDN Trunk)

MO Name (in Alarm Log)	Alarm Level	Initial Command to Run	Full Name of MO
ISDN-TRK[1]	MAJOR[2]	test port PCSSpp l	DS1 ISDN Trunk
ISDN-TRK	MINOR	test port PCSSpp l	DS1 ISDN Trunk
ISDN-TRK	WARNING	test port PCSSpp sh	DS1 ISDN Trunk

1. For additional repair information, refer to the "DS1-BD (DS1 Interface Circuit Pack)" maintenance object.
2. A MAJOR alarm on a trunk indicates that alarms on these trunks are not downgraded by the **set options** command and that at least 75 percent of the trunks in this trunk group are alarmed.

A DS1 ISDN Trunk is known as a B-channel. It is a 64 kbps Bearer channel that can be used to transmit digital traffic, be it voice or data. These trunks use a separate channel for signaling (for example, for call setup); this mode of operation is known as out-of-band signaling, as opposed to in-band, robbed-bit signaling, where the signaling traffic flows over the same channel as the voice or data traffic. The separate signaling channel is called a D-channel in ISDN terminology, and it carries all the call control signaling messages for the DS1 ISDN Trunk B-channels. The D-channel for these B-channels is an ISDN-PRI (Primary Rate Interface) Signaling Link Port (ISDN-LNK/ISDN-PLK).

On 24-channel interfaces, any of the first 23 ports on the DS1/UDS1 interface circuit pack can be a B-channel. The 24th port may be used as a B-channel or as a D-channel depending on the type of ISDN-PRI Signaling Group (ISDN-SGR) to which it belongs.

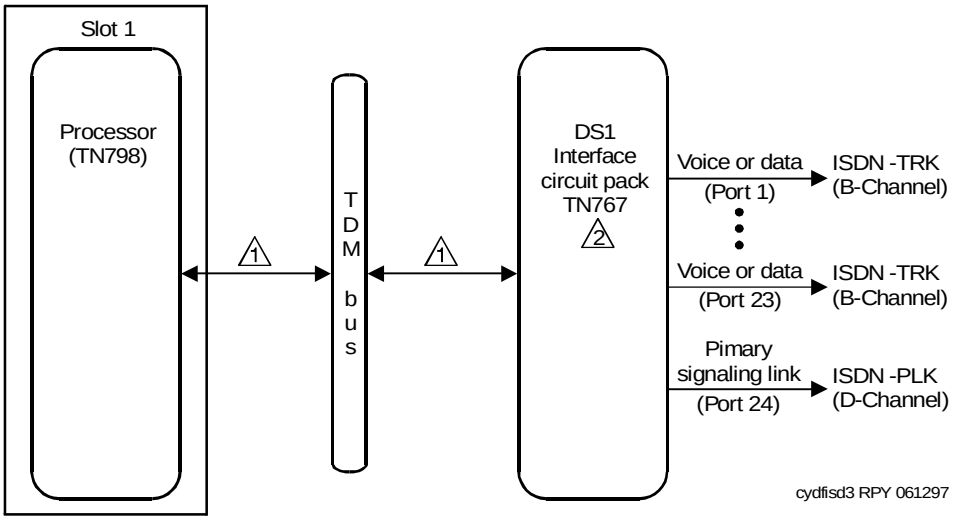

Figure Notes

1. B- and D-channel messages are routed over the TDM Bus. For additional reliability, a duplex D-channel can be administered for a signaling group and located on a different TN464C (or higher) circuit pack.
2. TN767B (or higher) for DS1; TN464C (or higher) for UDS1

Figure 3-17. DS1 ISDN Trunk Interactions (24 Channel - TN767/464C)

On 32 channel interfaces, any of ports 1-15 and 17-31 on the DS1 interface circuit pack can be a B-channel. The 16th port may be used as a B-channel or as a D-channel depending on the type of ISDN-PRI Signaling Group (ISDN-SGR) to which it belongs. For more details, refer to the ISDN-SGR and DS1-BD/UDS1-BD Maintenance documentation.

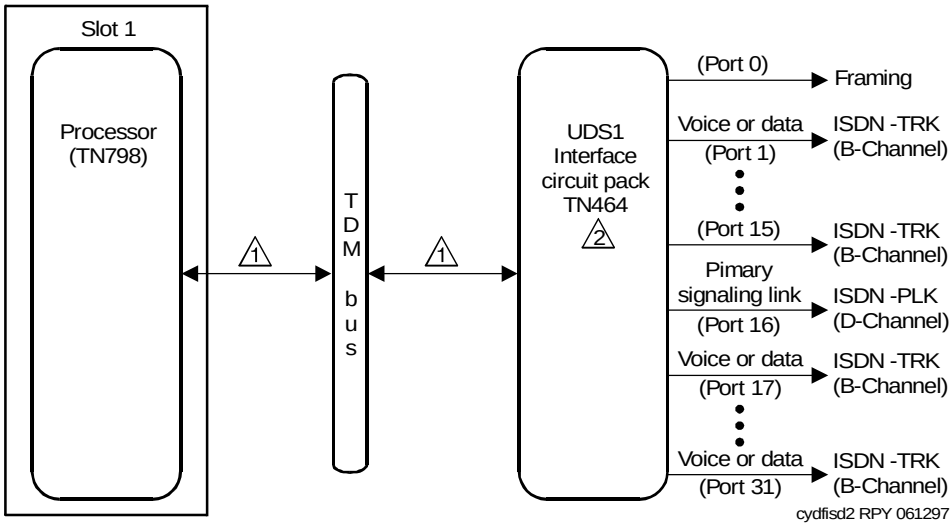

Figure Notes

1. B- and D-channel messages are routed over the TDM Bus. For additional reliability, a duplex D-channel can be administered for a signaling group and located on a different TN464C (or higher) circuit pack.
2. TN464C or higher

Figure 3-18. ISDN-PRI Signaling Link Port Interactions (32-Channel - TN464)

For interfaces using country protocol 1 on the DS1 Circuit Pack administration form (including US), the signaling protocol used for the maintenance of the B-channel is defined by the Lucent ISDN-PRI Specification.

For interfaces using country protocols other than 1, the signaling protocol used for the maintenance of the B-channel is defined by the CCITT ISDN-PRI Specification.

There are five possible Service States for a B-channel. The service state is negotiated with the far-end switch, changes over time, and may have a far-end or near-end component. The service state is initialized to Out-Of-Service/Far-End state and an attempt is made to negotiate it to In-Service.

NOTE:
The service state of a particular DS1 ISDN Trunk B-channel can be displayed by issuing the **status trunk <trunk_group/trunk_member>** system technician command.

If a call is present, the Specification defines the permissible Call States as well. There are tests in the Short and Long Test Sequences for DS1 ISDN Trunk designed to audit these states and ensure agreement between both ends of the PRI connection.

Alarming Based on Service States

A warning alarm is logged against a DS1 ISDN B-channel trunk when it is placed in the Maintenance/Far-End or Out-Of-Service/Far-End states, during which the trunk is unusable for outgoing calls. When a warning alarm is present, use **status trunk group#/member#** command to determine the exact state. Other alarms can be diagnosed by using the short and/or long test sequences. Note that an ISDN B-channel trunk can be placed in a Far-End service state by either action taken by the far-end switch or by failure of the far-end switch to respond. For example, if the far-end does not respond to a Remote Layer 3 Query (Test #637 for ISDN-SGR), the associated DS1 ISDN trunk B-channels is placed in the Maintenance/Far-End service state.

As a port on a DS1 circuit pack (DS1-BD or UDS1-BD), and as part of a signaling group dependent on a D-channel (ISDN-PLK) for signaling, operation of the ISDN-TRK is dependent on the health of these other maintenance objects.

DS1 ISDN Trunk Service States

This section defines the possible service states of a DS1 ISDN trunk, explains the reason for each service state, and provides the recommended recovery procedures (when required).

Service States

- In-Service (INS)

  The B-channel is in its normal operating state.

- Out-of-Service/Far-end (OOS/FE)

  A B-channel is initialized to this state when administered and it may also be in this state if there is a failure on the B-channel attributed to a problem on the far-end switch. The switch sends messages to the far-end to negotiate the B-channel into service. If the far-end does not respond to the messages within a certain time period, then the service state remains out-of-service and maintenance will periodically resend the messages.

The trunk is unusable for outgoing calls. On US interfaces, the trunk is unusable for incoming calls, but on non-US interfaces, incoming calls will be accepted.

- Out-of-Service/Near-end (OOS/NE)

  This is the state of the trunk when a hardware failure exists on the link, the NPE Crosstalk Test fails, or when the trunk is busied out by system technician. In this state, the trunk is unusable for incoming or outgoing calls. No messages are sent to the far-end until the signaling link comes back into service or the trunk is released by system technician.

- Maintenance/Far-end (MTC/FE)

  This state is reached when the far-end does not respond to messages sent over the signaling link for a particular trunk after a certain amount of time. This state is different from OOS/FE since the signaling link must have initially been up and the B-channels in-service. The switch will periodically send messages to the far-end to try to negotiate the trunk (B-channel) into service. The trunk is unusable for outgoing calls but will service incoming call requests from the far-end. Note that transitions into MTC/FE do not drop stable calls. Therefore, if the service state changes from in-service to MTC/FE, then stable calls are unaffected.

- Maintenance/Near-end (MTC/NE)

  The trunk (B-channel) is in this state if the signaling link (PKT-INT) is busied out by system technician. The trunk (B-channel) is also temporarily in this state if system technician has issued a **test trunk trunk_group/trunk_member long** command. This command will execute the ISDN-PRI test call. This test will change the state of the trunk member to MTC/NE for the duration of the test unless a call request comes in from the far-end. In that case, the test would abort. Note that transitions into MTC/NE do not drop stable calls. Therefore, a system technician-demanded **busyout link lnk-no** command will not drop stable trunk calls. In this state, the B-channel is not usable for new outgoing calls, but is available for incoming calls and outgoing test calls.

- Pending States

  If the near-end is expecting a timed response from the far-end for a request to change the service state of a trunk, then the state of the trunk reflects a Pending State.

  — Pending-in-service (PINS)

    The near-end has sent a B-channel maintenance message to the far-end, requesting that the B-channel service state be transitioned to in-service. The far-end has a certain amount of time to respond to the message. The service state will be PINS until either a response is received or the timer expires.

  — Pending-maintenance (PMTC)

This state is supported only by systems using country protocol 1 (including US). The near-end has sent a B-channel maintenance message to the far-end, requesting that the B-channel service state be transitioned to maintenance. The far-end has a certain amount of time to respond to the message. The service state will be PMTC until either a response is received or the timer expires.

— Call Activity States

In addition to the service and pending state, the state of a B-channel also reflects its call activity. If a call is connected over the B-channel, then the state of the trunk will reflect the "active" call state, for example, "in-service/active." If there is no call on the B-channel, then the trunk will reflect the "idle" call state, for example, "OOS/FE-idle."

The following diagram of the DS1 ISDN Trunk service states shows the common progression from one service state to another and the event that caused the change of state.

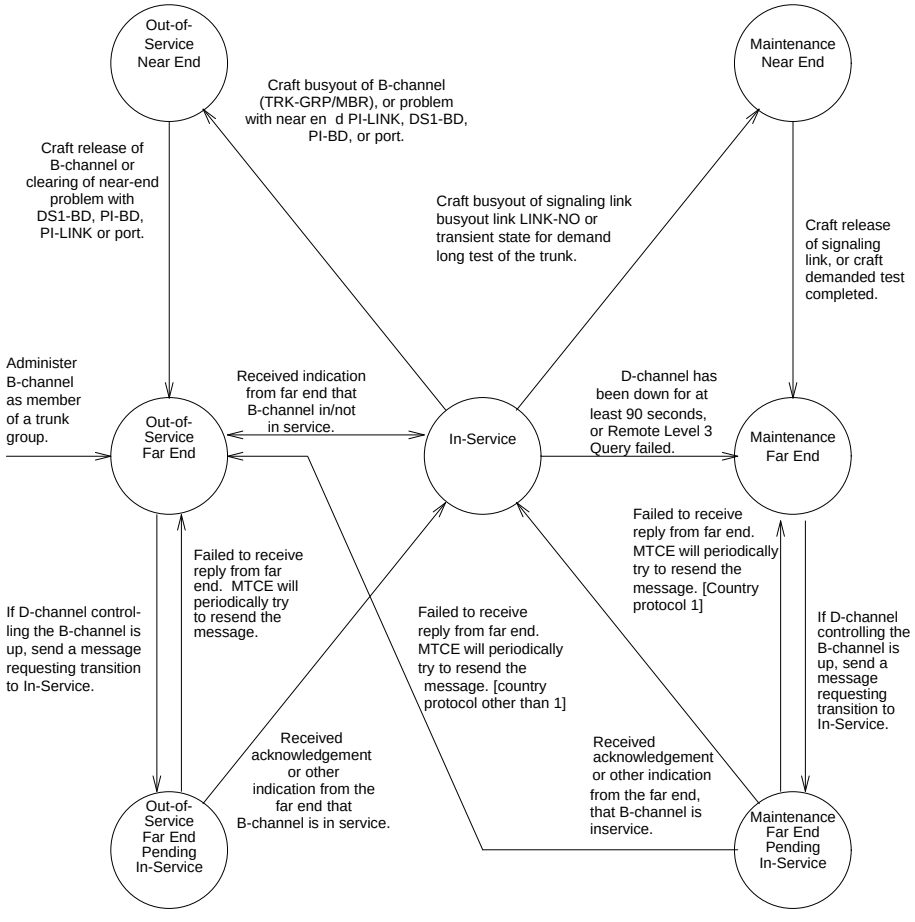

Figure 3-19. Common Progressions in Service States

ISDN-PRI Trunk Service States

The following chart summarizes each of the different DS1 ISDN Trunk service states that can result when the **status trunk <trunk_group/trunk_member>** command is issued.

NOTE:
Refer to "Troubleshooting ISDN-PRI Problems" in Chapter 1, "Maintenance for R6csi Compact Modular Cabinets" for a layered approach to processing ISDN-PRI problems.

Table 3-196. ISDN-PRI Trunk Service States (Test #161 Loop Around Test)

Service State	Alarm*	Possible Cause	Possible Solution
out-of-service/NE	Warning	Trunk is demand busied out.	Enter **release trunk** grp#/mbr#.
	Minor	NPE Crosstalk Test (#6) failed.	Replace DS1/UDS1 circuit pack.
	None	DS1 or UDS1 circuit pack lost its signal.	Is the DS1/UDS1 circuit pack or cable removed? Is the far-end switch restarting? Check circuit pack using procedures in DS1-BD or UDS1-BD.
out-of-service/FE	Warning	Unadministered far-end	Administer corresponding trunk on far-end switch.
	Warning	The far-end trunk is busied out.	Check the status of the far-end switch.
pending-in-service, pending-maint	None	Maintenance message was sent and the switch is waiting up to 2 min. for a reply from the far-end.	Wait 2 minutes and check service state after the pending state has cleared.
maint-NE	None	ISDN test call in progress (**test trunk long** and **test isdn-testcall** commands)	Wait several minutes for test to finish and check status again.
	None	System link has been busied out by command.	Check link status. Release link with **release link** link#.
maint-FE	Warning	Signaling channel has been down for over 90 sec.	Consult ISDN-SGR and/or ISDN-LNK. Far-end signaling channel may be busied out, or the far-end switch may currently be restarting.
	Warning	Repeated failure of far end to respond to messages.	Maintenance software will periodically try to resend messages. You can speed the process with **test trunk grp#/mbr#** and/or **test signaling-gr #**.
	Warning	The far-end trunk is being tested.	Check status of the far-end switch. Wait for testing to finish.
in-service	None	Normal operating state	

Error Log Entries and Test to Clear Values

Table 3-197. DS1 ISDN Trunk Error Log Entries

Error Type	Aux Data	Associated Test	Alarm Level	On/Off Board	Test to Clear Value
0[1]	0	Any	Any	Any	test port PCSSpp sh r 1
1 (a)	Any	None			test port PCSSpp sh r 1
15 (b)	Any	Audit and Update Test (#36)			
18	0	busyout trunk <grp>/<mbr>			release trunk <grp>/<mbr>
129 (c)		None	WARNING	OFF	test port PCSSpp
130 (d)		None	WARNING	ON	test port PCSSpp
257 (e)	Any	None			test port PCSSpp
513 (f)	Any	None	WARNING	OFF	test port PCSSpp
769 (e)	Any	None			test port PCSSpp
1281	Any	Conference Circuit Test (#7)	MIN/ WRN[2]	ON	test port PCSSpp l r 4
1537	Any	NPE Crosstalk Test (#6)	MIN/WRN[2]	ON	test port PCSSpp l r 3
1793 (g)	Any	None			test port PCSSpp
3073 (h)	Any	Service State Audit (#256)			test port PCSSpp
3585 (i)	Any	None			None
3841 (j)	Any	None			None

1. Run the Short Test Sequence first. If all tests pass, run the Long Test Sequence. Refer to the appropriate test description and follow the recommended procedures.
2. Minor alarms on this MO may be downgraded to Warning alarms based on the values used in the **set options** command. If the Minor alarm is not downgraded by the **set options** values, then the Minor alarm will be upgraded to a Major alarm if 75 percent of the trunks in this trunk group are alarmed.

Notes:

a. These error types indicate a disagreement between this switch and the switch at the other end of the trunk connection with regard to the ISDN *call* state of the DS1 ISDN Trunk. This switch will automatically try to recover by clearing the call, (that is, the call will be torn down). You can use the **status trunk <trunk_group/trunk_member>** command to determine the state of the trunk.

When running the Short Test Sequence of tests, pay close attention to the results of the Call State Audit Test (#257).

b. This is a software audit error that does not indicate any hardware malfunction. Run the Short Test Sequence and investigate associated errors (if any).

c. The far-end switch changed its ISDN *service* state to either out-of-service or maintenance. This may be a temporary condition due to testing of that trunk by the far-end *or* a hardware problem with the trunk. Outgoing calls will not be allowed over the trunk. To investigate the status of the trunk, issue the **status trunk <trunk_group/trunk_member>** command.

d. This error type indicates that the circuit pack has been removed or has been insane for more than 11 minutes. To clear the error, reinsert or replace the circuit pack.

e. These error types indicate a disagreement between this switch and the switch at the other end of the trunk connection with regard to the ISDN service state of the DS1 ISDN Trunk. This switch will automatically try to recover by performing a service state audit. You can use the **status trunk <trunk_group/trunk_member>** command to determine the state of the trunk.

   When running the Short Test Sequence, pay close attention to the results of the Service State Audit Test (#256).

f. This trunk is not recognized by the far-end switch. Investigate the trunk administration for both switches and make changes as necessary.

g. This error indicates a failure of the DS1/UDS1 Interface circuit pack. When running the Short Test Sequence, the results of the Signaling Link State Check Test (#255) are important.

h. Two Service State Audit attempts have failed (see Test #256). The trunks will not be usable for any outgoing calls (although incoming calls will be accepted) until the test passes and the trunk state is changed to in-service (use **status trunk trunk_group/trunk_member** to investigate trunk status).

i. Error Type 3585 appears when the switch receives an ISDN RESTART message for an ISDN trunk. Calls are cleared with the RESTART message. Therefore, this error type may be associated with a dropped call report from a user.

   The following Aux Data values for Error Type 3585 represent the trunk's ISDN call state at the time the unexpected request to restart the channel was received from the remote switch. This information can be useful if

dropped calls (cutoffs) are being reported by users of the ISDN-PRI trunks. The meanings of the various Aux Data values are shown below; any others can be ignored.

Aux Data	Explanation
0	A idle trunk received a restart.
10	A call in a stable, talking state was cleared unexpectedly by the far-end with an ISDN RESTART message. This state is called the "active" state.
4, 7, 8 260, 263	A call that has not reached the active state, but has at least reached a ringing state, was cleared unexpectedly by the far-end with an ISDN RESTART message.
1, 3, 6 9, 265	A call that has not yet reached a ringing state was cleared unexpectedly by the far-end with an ISDN RESTART message.
11, 12 19, 531, 267, 268	A call that was in the process of clearing anyway has been cleared by the far-end with an ISDN RESTART message. If this condition occurs frequently, it may mean that the far-end is attempting to clear trunks that it thinks are in a "hung" state. The RESTART message brings the trunk to an idle condition.

j. An ISDN trunk selected by the near-end has been rejected 10 times by the far-end without a successful call. This may indicate a service state mismatch between the near-end and far-end for this trunk that is effecting the end user (that is, customer receives unexpected intercept tones when accessing ISDN trunks). This may indicate that the ISDN trunk is not administered on the far-end.

   The Aux field contains the physical name of the ISDN trunk in decimal. Then, verify that the far-end has this trunk administered. If problems persist, then busy-out the ISDN trunk to take it out of the hunt group.

   The Warning alarm will be retired automatically whenever an outgoing or incoming call that uses this trunk is answered by the called endpoint. If problems persist, then busy-out the ISDN trunk to take it out of the hunt group.

System Technician-Demanded Tests: Descriptions and Error Codes

Always investigate tests in the order presented in the table below when inspecting errors in the system. By clearing error codes associated with the *NPE Crosstalk Test*, for example, you may also clear errors generated from other tests in the testing sequence.

Table 3-198. System Technician-Demanded Tests: ISDN-TRK

Order of Investigation	Short Test Sequence	Long Test Sequence	D/ND[1]
NPE Crosstalk Test (#6)		X	ND
Conference Circuit Test (#7)		X	ND
Audit and Update Test (#36)	X	X	ND
Signaling Link State Check Test (#255)	X	X	ND
Service State Audit Test (#256)	X	X	ND
Call State Audit Test (#257)	X	X	ND
ISDN Test Call Test (#258)		X	ND

1. D = Destructive, ND = Non-destructive

NPE Crosstalk Test (#6)

The NPE Crosstalk Test verifies that this port's NPE channel talks on the selected time slot and never crosses over to time slots reserved for other connections. If the NPE is not working correctly, one-way and noisy connections may be observed. This test is usually only part of a port's Long Test Sequence and takes about 20 to 30 seconds to complete.

NOTE:
The TN464C or later UDS1 circuit pack has one SCOTCH-NPE chip instead of several NPE chips.

Table 3-199. TEST #6 NPE Crosstalk Test

Error Code	Test Result	Description/ Recommendation
	ABORT	Could not allocate the necessary system resources to run this test. 1. Retry the command at 1-minute intervals a maximum of 5 times.
1000	ABORT	System resources required for this test are not available. The port may be in use on a valid call. Use **status station** or **status trunk** commands to determine when the port is available for testing. 1. Retry the command at 1-minute intervals a maximum of 5 times.

Continued on next page

Table 3-199. TEST #6 NPE Crosstalk Test — *Continued*

Error Code	Test Result	Description/ Recommendation
1001	ABORT	Could not allocate the necessary system resources to run this test. 1. Retry the command at 1-minute intervals a maximum of 5 times.
1002	ABORT	The system could not allocate time slots for the test. The system may be under heavy traffic conditions or it may have time slots out-of-service due to TDM-Bus errors. Refer to TDM-Bus Maintenance to diagnose any active TDM-Bus errors. 1. If the system has no TDM-Bus errors and is not handling heavy traffic, repeat the test at 1-minute intervals a maximum of 5 times.
1003	ABORT	The system could not allocate a tone receiver for the test. The system may be oversized for the number of tone detectors present or some tone detectors may be out-of-service. 1. Look for TTR-LEV errors in the Error Log. If present, refer to TTR-LEV Maintenance documentation. 2. Look for TONE-PT errors in the Error Log. If present, refer to TONE-PT Maintenance documentation. 3. If neither condition exists, retry the test at 1-minute intervals a maximum of 5 times.
1004	ABORT	The port has been seized by a user for a valid call. Use **status station** or **status trunk** commands to determine when the port is available for testing. 1. Retry the command at 1-minute intervals a maximum of 5 times.
1018	ABORT	Maintenance is disable on this trunk. 1. Enable maintenance by entering ‘‘y’’ in the ‘‘Maintenance Tests?’’ field on page 2 of the **change trunk-group** form.
1117	ABORT	A service state audit message is outstanding. 1. Wait 2 minutes and then try again.
2000	ABORT	Response to the test request was not received within the allowable time period. 1. Retry the command at 1-minute intervals a maximum of 5 times.
2020	ABORT	The test did not run due to an already existing error on the specific port or a more general circuit pack error. 1. Examine Error Log for existing errors against this port or the circuit pack and attempt to diagnose the already existing error.
2100	ABORT	Could not allocate the necessary system resources to run this test. 1. Retry the command at 1-minute intervals a maximum of 5 times.

Continued on next page

Table 3-199. TEST #6 NPE Crosstalk Test — *Continued*

Error Code	Test Result	Description/ Recommendation
Any	FAIL	The NPE of the tested port was found to be transmitting in error. This will cause noisy and unreliable connections. The ISDN-TRK is moved to out-of-service/near-end state. 1. Replace the circuit pack.
	PASS	The port is able to communicate over the TDM Bus.

Conference Circuit Test (#7)

The Conference Circuit test verifies that the NPE channel for the port being tested can correctly perform the conferencing function. The NPE is instructed to listen to several different tones and conference the tones together. The resulting signal is then measured by a tone detector port. If the level of the tone is within a certain range, the test passes.

NOTE:
The TN464C or later UDS1 circuit pack has one SCOTCH-NPE chip instead of several NPE chips.

Table 3-200. TEST #7 Conference Circuit Test

Error Code	Test Result	Description/ Recommendation
	ABORT	Could not allocate the necessary system resources to run this test. 1. Retry the command at 1-minute intervals a maximum of 5 times.
1000	ABORT	System resources required to run this test are not available. The port may be in use on a valid call. Use **status station** or **status trunk** commands to determine when the port is available for testing.
1004	ABORT	The port has been seized by a user for a valid call. Use status station or status trunk to determine when the port is available for testing. 1. Retry the command at 1-minute intervals a maximum of 5 times.
1018	ABORT	Maintenance is disabled on this trunk. 1. Enable maintenance by entering **y** in the `Maintenance Tests?` field on page 2 of the **change trunk-group** form.

Continued on next page

Table 3-200. TEST #7 Conference Circuit Test — *Continued*

Error Code	Test Result	Description/ Recommendation
1020	ABORT	The test did not run due to an already existing error on the specific port or a more general circuit pack error. Examine Error Log for existing errors against this port or the circuit pack and attempt to diagnose the already existing error.
2000	ABORT	Response to the test request was not received within the allowable time period.
2100	ABORT	Could not allocate the necessary system resources to run this test. 1. Retry the command at 1-minute intervals a maximum of 5 times.
Any	FAIL	The NPE of the tested port did not conference the tones correctly. This will cause noisy and unreliable connections. 1. Replace the circuit pack.
	PASS	The port can correctly conference multiple connections. User-reported troubles on this port should be investigated using other port tests and examining station, trunk, or external wiring.

Audit and Update Test (#36)

This test sends port level translation data from switch processor to the DS1 interface circuit pack to assure that the trunk's translation is correct. The port audit operation verifies the consistency of the current state of trunk kept in the DS1 interface circuit pack and in the switch software.

Table 3-201. TEST #36 Audit and Update Test

Error Code	Test Result	Description/ Recommendation
	ABORT	Internal system error
1018	ABORT	Maintenance is disabled on this trunk. 1. Enable maintenance by entering **y** in the `Maintenance Tests?` field on page 2 of the **change trunk-group** form.
2000	ABORT	Response to the test request was not received within the allowable time period.
2100	ABORT	Could not allocate the necessary system resources to run this test. 1. Retry the command at 1-minute intervals a maximum of 5 times
	FAIL	Test failed due to Internal system error. 1. Retry the command at 1-minute intervals a maximum of 5 times.
	PASS	Trunk translation has been updated successfully. The current trunk states kept in the DS1 interface circuit pack and switch software are consistent. If the trunk is busied out, the test will not run, but will return PASS. To verify that the trunk is in-service: 1. Enter **status-command** to verify that the trunk is in-service. If the trunk is in-service, no further action is necessary. If the trunk is out-of-service, continue to Step 2. 2. Enter **release-trunk** command to put trunk back into in-service. 3. Retry the test command.

Signaling Link State Check Test (#255)

As noted in the general description for a DS1 ISDN Trunk, it depends on the health of the DS1/UDS1 interface circuit pack and the ISDN-PRI D-channel (ISDN-LNK/ISDN-PLK) trunk for proper operation. This test checks the status of those critical elements.

Table 3-202. TEST #255 Signaling Link State Check Test

Error Code	Test Result	Description/ Recommendation
	ABORT	Internal system error

Continued on next page

Table 3-202. TEST #255 Signaling Link State Check Test — *Continued*

Error Code	Test Result	Description/ Recommendation
1018	ABORT	Maintenance is disable on this trunk. 1. Enable maintenance by entering **y** in the `Maintenance Tests?` field on page 2 of the **change trunk-group** form.
1114	ABORT	The signaling link is in a transitional state. 1. Retry the command at 1-minute intervals a maximum of 5 times.
4	FAIL	There is a problem with the Signaling Channel. 1. If the Packet Control circuit pack is used consult the procedures for the ISDN-PRI Signaling Group (ISDN-SGR). Further information may also be obtained by consulting the procedures for the ISDN-PRI Signaling Channel (ISDN-PLK). 2. If the Packet Interface is used, consult the procedures for PKT-INT.
8	FAIL	There is a problem with the DS1 interface circuit pack. 1. Consult the procedures for DS1 interface circuit pack (DS1-BD/UDS1-BD).
	PASS	The signaling link hardware is OK.

Service State Audit (#256)

These trunks may be in one of several service states. This test performs a Service State Audit with the far-end switch.

For interfaces using country protocol 1 (including US), the Service State Audit executes in all trunk service states. A message is sent to the far-end switch to ensure that both sides agree on the service state. A PASS for this test simply means that the message has been successfully sent. Two minutes are allowed for a reply. If no reply is received within that 2 minute window, the message is sent out again. If that attempt fails, an error is logged (Error Type 3073) and the switch then attempts another Service State Audit every 15 minutes. If the trunk was initially INS (in-service), it is then placed in the MTC/FE (maintenance state, far-end problem) state. No outgoing calls are placed over this trunk, but incoming calls are accepted. If an incoming call is presented while in such a state, a Service State Audit attempt is immediately attempted (that is, the switch does not wait for the 15-minute cycle, but tries to recover immediately).

For interfaces not using country protocol 1, the Service State Audit executes only if the trunk is in the OOF/FE state. A message is sent to the far-end switch to attempt to bring the trunk back into the in-service state. A PASS for this test simply means that the message has been successfully sent. Two minutes are

allowed for a reply. If no reply is received within that two minute window, the message is sent out once again. If no response is received in the next two minute window, then the trunk remains in the OOS/FE state. The switch will attempt another Service State Audit in another hour.

To investigate the service state of the DS1 ISDN Trunk, issue the **status trunk trunk-group/trunk-member** command.

Table 3-203. TEST #256 Service State Audit Test

Error Code	Test Result	Description/ Recommendation
1000	ABORT	System resources required to run this test are not available. The port may be on a valid call. Use **status station** or **status trunk** to determine when trunk is available for testing. 1. Check the results of Test #255 (Signaling Link State Check).
1018	ABORT	Maintenance is disable on this trunk. 1. Enable maintenance by entering **y** in the `Maintenance Tests`? field on page 2 of the **change trunk-group** form.
1113	ABORT	The signaling link has failed, so the system cannot send any messages on behalf of this trunk. 1. Check the results of Test #255 (Signaling Link State Check).
1114	ABORT	The signaling link is in a transitional state. 1. Retry the command at 1-minute intervals a maximum of 5 times.
1116	ABORT	The trunk is not in a service state which is appropriate for running the test. This test is only performed in the OOS/FE state.
1117	ABORT	A service state audit message is outstanding. 1. Wait two minutes and then try again.
2100	ABORT	Could not allocate the necessary system resources to run this test. 1. Retry the command at 1-minute intervals a maximum of 5 times.
1113	FAIL	The signaling link has failed, so the system cannot send any messages on behalf of this trunk. 1. Consult the procedures for ISDN-LNK (ISDN-PRI Signaling Link Port) and PKT-INT (Packet Interface).
	FAIL	Internal system error 1. Retry the command at 1-minute intervals a maximum of 5 times.

Continued on next page

Table 3-203. TEST #256 Service State Audit Test — *Continued*

Error Code	Test Result	Description/ Recommendation
	PASS	Wait 4 minutes and then check the Error Log for any new errors of type 3073. If there are none, then both sides of the ISDN connection agree on the service state; the negotiation succeeded. If there is a new 3073 error, then the negotiation failed (the far-end switch twice failed to respond within 2 minutes). The switch will automatically retry every 15 minutes. If the trunk was initially in-service, it is now placed in the maintenance/far-end state. Incoming calls will be accepted, but no outgoing calls can be originated. If an incoming call is presented, another Service State Audit will be immediately performed in an attempt to put the DS1 ISDN Trunk in the proper state.

Call State Audit Test (#257)

If a call is active on the trunk, the switches on both sides of the connection should agree on the ISDN state of the call, as defined in the ISDN Protocol Specification. This test audits internal call state data by querying the far-end switch as to the ISDN state of the call. It can be helpful when trying to clear a hung call. If the internal call state data on the near-end switch is different than that of the far-end switch, then **the call will be torn down.**

As with Test #256 (Service State Audit), a PASS simply means that an appropriate message was composed and sent to the far-end switch. The ISDN Specification allows up to two minutes for a reply. If a reply is not received within the two minute window, a protocol time-out violation will be recorded in the error log against the associated signaling channel (ISDN-PRI Signaling Link Port, which is listed in the Error Log as ISDN-LNK/ISDN-PLK; the Error Type is 1).

Table 3-204. TEST #257 Call State Audit Test

Error Code	Test Result	Description/ Recommendation
1018	ABORT	Maintenance is disable on this trunk. 1. Enable maintenance by entering **y** in the `Maintenance Tests?` field on page 2 of the **change trunk-group** form.
1019	ABORT	An audit is already in progress. 1. Wait two minutes and try again.

Continued on next page

Table 3-204. TEST #257 Call State Audit Test — *Continued*

Error Code	Test Result	Description/ Recommendation
1113	ABORT	The signaling link has failed, so the system cannot send any messages on behalf of this trunk. 1. Check the results of Test #255 (Signaling Link State Check).
1114	ABORT	The signaling link is in a transitional state. 1. Retry the command at 1-minute intervals a maximum of 5 times.
1116	ABORT	The trunk is in an out-of-service ISDN service state. 1. A call cannot be present if the trunk is in an ISDN out-of-service state, so a call state audit would be inappropriate. No action necessary. (Use the **status trunk**
2100	ABORT	Could not allocate the necessary system resources to run this test. 1. Retry the command at 1-minute intervals a maximum of 5 times.
	FAIL	Internal system error 1. Retry the command at 1-minute intervals a maximum of 5 times.
	PASS	This switch sent a call state auditing message to the far-end switch to verify the state of the call active on this trunk. If a call state mismatch is found, then the call will be torn down within two minutes. If no call was active, then no message was sent.

ISDN Test Call Test (#258)

This test performs a far-end loop around to a far-end switch over an ISDN trunk. The trunk's service state must be in-service, maint-NE, or out-of-service/NE, and no call can be active on the trunk. The test call can be initiated as part of a long test sequence, or as an individual test, as described below. This test is valid only for systems using country protocol 1 (including US), or when the far end has loop-around capability.

A test call connection is established to a far-end switch over the ISDN trunk to be tested. The digital port on a TN711D Maintenance/Test circuit pack generates a test-pattern bit stream which is sent to the far-end switch and echoed back. The received pattern is then compared to the sent pattern and checked for errors that indicate a loss of integrity on the communications path.

If a test call is running when scheduled maintenance starts, the green LED is turned off. To determine if a test call is still running, use the **list isdn-testcall** and **status isdn-testcall** commands. A lit yellow LED on the Maintenance/Test circuit pack also indicates that a test call is running.

There are two methods available to place an outgoing ISDN-PRI test call.

In the first method, the test call connection is established over the TDM Bus of the transmit and receive sides of the ISDN-PRI trunk to a data channel. This method is selected when no Maintenance/Test circuit pack resides in the system.

In the second method, the test call connection is established over the TDM Bus of the transmit and receive sides of the ISDN-PRI trunk to a digital trunk testing port on the Maintenance/Test circuit pack. The Maintenance/Test Digital Port generates a pseudo bit stream. A pictorial description of the outgoing ISDN-PRI test call connectivity is contained in Figure 3-20.

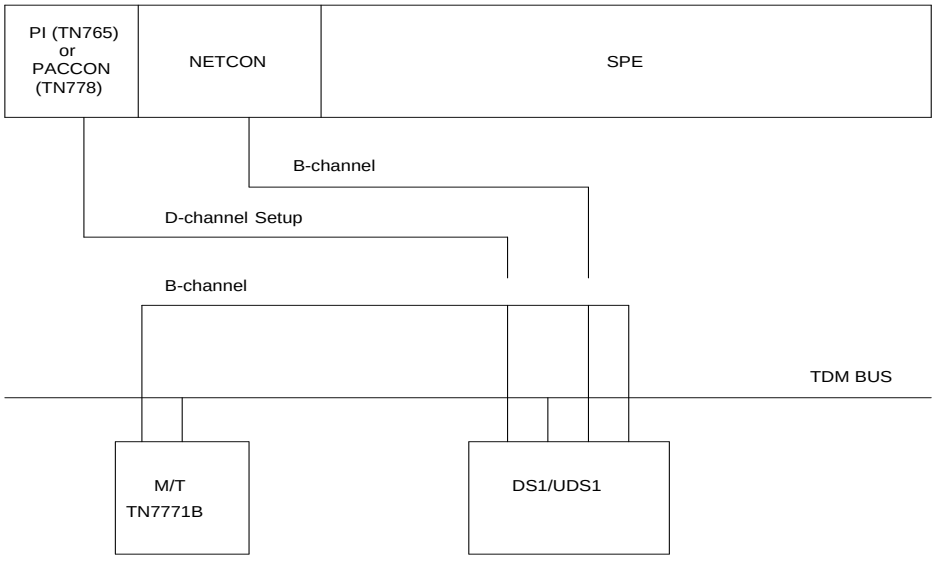

Figure 3-20. ISDN-PRI Outgoing Test Call

Synchronous Commands

You can demand a synchronous outgoing test call by using the following maintenance commands:

- **test trunk trunk-group-no/member-no long [repeat number]**
- **test board board-location long [repeat number]**
- **test port port-location long [repeat number]**

Whenever a circuit translates to an ISDN-PRI trunk during a Long Test Sequence, an outgoing test call is invoked. If the B-channel is unrestricted (B8ZS or HDB3) the default duration of the test call is 8.6 seconds. Otherwise, if the B-channel is

restricted (ZCS) the default duration of the test call is 9.4 seconds. Once the test call completes, the bit error rate is retrieved from the Maintenance/Test Digital Port. A bit error rate greater than zero is reported as a failure to the Manager I terminal (MGRI). A failure indicates the need to run further diagnostics, such as the **test isdn-testcall** command.

If no Maintenance/Test circuit pack exists, the outgoing ISDN-PRI test call is established over a high speed data channel on the Network Control (NETCON) circuit pack (DATA-BD).

Asynchronous Commands

You can start, query, and stop an outgoing test call by using the following maintenance commands:

- **test isdn-testcall trunk-group-no/member-no [minutes]**

  This command enables you to start an outgoing ISDN-PRI test call for a maximum of two hours (120 minutes).

- **status isdn-testcall trunk-group-no/member-no**

  This command displays the progress of the outgoing test call by reporting the bit and block error rates of the tested B-channel specified by the "trunk group no/member no" identifier.

- **clear isdn-testcall trunk-group-no/member-no**

  This command enables you to stop an outgoing test call already in progress. The **trunk-group-no/member-no** identifier specifies the B-channel used to stop the test call. The measurements are not cleared until the next test call begins.

NOTE:
Only one trunk can be tested in a given port network, until the test call is canceled or completes.

Table 3-205. TEST #258 ISDN TEST Call

Error Code	Test Result	Description/ Recommendation
4	ABORT	There is a problem with the Processor Interface Link. 1. Refer to PKT-INT (Packet Interface).
8	ABORT	There is a problem with the DS1 interface circuit pack. 1. Refer to DS1-BD (DS1 Interface Circuit Pack).

Continued on next page

Table 3-205. TEST #258 ISDN TEST Call — *Continued*

Error Code	Test Result	Description/ Recommendation
1004	ABORT	B channel in use. 1. Determine if a call is active on this DS1 ISDN Trunk via the **status trunk** 2. When the service state indicates in-service/idle, retry the test.
1005	ABORT	Bad Configuration (that is, no Maintenance/Test circuit pack) Issue the **test trunk <trunk Group/trunk member>** command and make sure there is a DATA-CHL (NETCON channel) administered.
1018	ABORT	Test call is disabled. 1. Enable Maintenance on the Trunk Group form.
1019	ABORT	Another Test call is in progress. 1. Issue the **list isdn-testcall** command to locate the test call. 2. Issue the **status isdn-testcall** command to find out the duration and start time of the test call. 3. Issue the **clear isdn-testcall** command to stop the test call from running.
1020	ABORT	There is a problem with DS1 Interface Circuit Pack. 1. Refer to the DS1-BD (DS1 Trunk circuit pack).
1024	ABORT	Maintenance/Test Digital Port in use. 1. Wait until yellow and green LEDs are turned off on the Maintenance/Test circuit pack. 2. Retry the test.
1113	ABORT	The signaling link has failed. Therefore, the system cannot send any messages on behalf of this trunk. 1. Check the results of Test #255 (Signaling Link State Check Test).
1114	ABORT	The signaling link is in a transitional state. 1. Retry the command at 1-minute intervals a maximum of 5 times.
1116	ABORT	The switch could not appropriately change the ISDN service state. 1. Determine if a call is active on this DS1 ISDN Trunk (use the **status trunk** 2. If not, check the Error and Alarm Logs for problems with this ISDN-TRK (DS1 ISDN Trunk) MO.
1117	ABORT	ISDN B-channel maintenance message is already outstanding. 1. Wait two minutes. Then try again.

Continued on next page

Table 3-205. TEST #258 ISDN TEST Call — *Continued*

Error Code	Test Result	Description/ Recommendation
1118	ABORT	Far-end of ISDN trunk is not administered. 1. Check the administration of the far-end ISDN trunk. 2. Issue the **status trunk** 3. Try the test again.
1119	ABORT	The test call was aborted due to a normal call attempt on this trunk. The test call is performed only if the trunk is idle. 1. Either wait for the normal call to terminate normally, or force it to be dropped by using the **busyout trunk**
1120	ABORT	The DS1 ISDN Trunk is in the ISDN out-of-service/far-end state. 1. Try to change the service state via Test #256 (Service State Audit Test). Then retry this test. **However, the trunk may be in the out-of-service/far-end state due to problems at the far-end switch. If that is the case, no remedial action can be taken at this end.**
1122	ABORT	There is no test line number for the far-end switch. 1. Check the Trunk Group Administration form.
1123	ABORT	There is no Feature Access Code administration for this Facility Test. 1. Check the Dial Plan and Feature Administration forms.
None 2012 2000	ABORT	Internal system error 1. Retry the command at 1-minute intervals a maximum of 5 times.
2035	ABORT	The call has timed out, perhaps because of a lack of system resources. 1. Wait 1 minute and try again.
2036 2037	ABORT	Internal system error 1. Follow the recommendation for ABORT code 2012.
2038 2039	ABORT	A problem occurred while trying to read the test data. 1. Wait 1 minute and then try again.
2040	ABORT	Internal system error 1. Follow the recommendations for ABORT code 2012.
2041	ABORT	The call has timed out, perhaps because of a lack of system resources. 1. Follow the recommendations for ABORT code 2035.
2066	ABORT	Could not establish test call. 1. Retry the command at 1-minute intervals a maximum of 5 times.

Continued on next page

Table 3-205. TEST #258 ISDN TEST Call — *Continued*

Error Code	Test Result	Description/ Recommendation
2067	ABORT	The call has timed out, perhaps because of a lack of system resources. 1. Follow the recommendations for ABORT code 2035.
2074	ABORT	Bit and Block Error query failed. 1. Retry the command at 1-minute intervals a maximum of 5 times. 2. If the test continues to abort, there may be a serious internal problem with Maintenance/Test Digital Port.
2075	ABORT	Internal system error 1. Follow the recommendations for ABORT code 2012.
2100	ABORT	Could not allocate the necessary system resources to run this test. 1. Retry the command at 1-minute intervals a maximum of 5 times.
2104	ABORT	Call dropped or could not be originated. 1. Make sure service is provisioned by the network. 2. Check the administration of the far-end test line extension on the trunk group administration form. 3. Check the administration of the test call BCC (Bearer Capability Class) on the trunk group administration form. 4. Check the reason for termination with **status isdn-testcall**. 5. For further instructions see "Troubleshooting ISDN-PRI Test Call Problems" in Chapter 5, "Routine Maintenance Procedures". 6. Try the test again.
2201 2202 2203 2204 2205	ABORT	Internal system error 1. Follow the recommendations for ABORT code 2012.
2206	ABORT	Could not allocate the necessary system resources to run this test. 1. Follow the recommendations for ABORT code 2100.
2208	ABORT	Internal system error 1. Follow the recommendations for ABORT code 2012.
2209 2210	ABORT	Could not allocate the necessary system resources to run this test. 1. Follow the recommendations for ABORT code 2100.
2211	ABORT	Internal system error 1. Follow the recommendations for ABORT code 2012.

Continued on next page

Table 3-205. TEST #258 ISDN TEST Call — *Continued*

Error Code	Test Result	Description/ Recommendation
2212	ABORT	Call terminated by unexpected disconnect. 1. Wait 1 minute and then try again.
2213	ABORT	The call has timed-out, perhaps because of a lack of system resources. 1. Follow the recommendations for ABORT code 2035.
2214	ABORT	Call terminated by unexpected disconnect. 1. Wait 1 minute and then try again.
2215 2216 2217 2218 2219	ABORT	Internal system error 1. Follow recommendations for ABORT code 2012.
2220	ABORT	Call terminated prematurely. 1. Wait 1 minute and try again.
2221 2222 2223 2224 2225 2226	ABORT	Internal system error 1. Follow recommendations for ABORT code 2012.
2227	ABORT	Could not allocate the necessary system resources to run this test. 1. Follow the recommendations for ABORT code 2100.
2042	FAIL	**This is the main purpose of the test.** The comparison of the data sent with the data received indicates a loss of integrity on the communications path. 1. The trunk should be taken out-of-service and the quality of the DS1 line should be investigated. The investigation should include an in-depth analysis of the DS1 facility including the transmission facility and any external equipment such as DACs, CSUs, etc. If the **test isdn-testcall** command is invoked, then the investigation should include getting the bit and block error rates by invoking the **status isdn-testcall** command.

Continued on next page

Table 3-205. TEST #258 ISDN TEST Call — *Continued*

Error Code	Test Result	Description/ Recommendation
	PASS	The call worked. A test pattern was sent and received properly; the communications path is OK if the synchronous test call command was issued. If the **test isdn-testcall** command was issued, a PASS indicates that the test call was established. A **status isdn-testcall** command must be invoked to query the bit and block error rates to determine if the test call passed. An in-depth analysis of the DS1 facility including the transmission facility and any external equipment such as DACs, CSUs, etc., should take place if the bit and block error rates are not acceptable.

LOG-SVN(Login Security Violation)

MO Name (in Alarm Log)	Alarm Level	Initial Command to Run[1]	Full Name of MO
LOG-SVN	MAJOR	enable login <login ID>	Login Security Violation

1. Where <login ID> is the services login ID for which the security violation was detected. The `Alt Name` field indicates the login ID associated with the security violation and the major alarm.

The Security Violation Notification (SVN) feature provides notification when the number of failed attempts to access the system administration/maintenance interface meets or exceeds customer administered threshold parameters.

A major alarm is logged whenever a security violation is detected involving a services login ID and that login ID has been disabled as a result of the security violation. The capability to disable a login ID following detection of a security violation involving that login ID is administrable on a per login ID basis.

Refer to *DEFINITY Enterprise Communications System Release 6 Administration and Feature Description* for information on administration required for the Security Violation Notification feature and the option to disable a login ID following detection of a security violation involving the affected login ID.

Hardware Error Log Entries and Test to Clear Values

Table 3-206. Hardware Error Log Entries and Test to Clear Value

Error Type	Aux Data	Associated Test	Alarm Level	On/Off Board	Test to Clear Value
1-15	None	None	Major	OFF	enable login <login ID>

General Information about log-svn Error Log Entries

a. The number (1 - 15), that appears in the error type field, corresponds to the location the login in the internal login data structure.

b. The `Alt Name` field on the alarm report indicates the login ID associated with the security violation and major alarm.

c. These errors/alarms are associated with a number of failed attempts to access the system management/maintenance interface using a services login ID that meet or exceed the customer administered threshold parameters. The associated alarm is immediately raised as a major alarm.

d. The affected login ID will be disabled as a result of detection of the security violation, unless it is the last enabled INADS type login on the system. The provision to disable a login ID following detection of a security violation involving that login ID is administrable on a login ID basis.

e. The **enable login** command is used to both enable a login that has been disabled, and to retire any login security violation alarms associated with the login ID.

f. Use of the **enable login** command to enable a login and/or retire alarms must be executed using a login ID with greater service level hierarchy permissions.

g. Access to the **enable login** command is controlled through the `Administer Permissions` field on the Command Permission Categories form. This field (Administer Permissions) must be set to **y** to access the enable login command.

h. The `Port` alarm report field will set to the port where the final invalid login attempt, involving the alarmed login ID, was detected. Valid port values for the CMC include:

   — MGR1 — Dedicated manager 1 or G3 management terminal connection

   — NET-n — Network controller dial up port

   — INADS — INADS port

   — EPN — EPN maintenance EIA port

   — EIA — Other EIA port

i. The `Svc State` alarm report field will be set to OUT if the login ID is in the disabled state as a result of detection of a security violation involving the login ID. Once the login ID has been enabled, the field is set to **IN**.

j. The source or reason of the failed login attempts should be identified and the cause corrected prior to re-enabling a login ID and/or retiring any alarms associated with the login ID. The cause may be something as innocuous as the failure of the services automatic login software, to something as insidious as a hacker attempting to gain access to the switch system management interface.

The login ID associated with that alarm is displayed in the `Alt Name` field of the alarm report.

Prior to retiring an SVN alarm and enabling the associated login ID, the **monitor security-violations login** command can be used to access information about the invalid login attempts that caused the security violation. This information can be useful in determining the source of the invalid attempts and analyzing why they occurred.

The **list logins** command provides status information about logins on the system. If a login has been disabled as a result of a security violation, the status will be `svn-disabled`.

Procedure to Retire an SVN Alarm

To retire a SVN alarm:

1. Enter the command **enable login <login ID>.**

   The login ID associated with that alarm is displayed in the `Alt Name` field of the alarm report and the alarm is retired.

JNL-PRNT (Journal Printer Link)

MO Name (in Alarm Log)	Alarm Level	Initial Command to Run	Full Name of MO
PMS-PRNT/JNL-PRNT	MINOR	test journal pms-log/wakeup-log	Journal Printer Link
PMS-PRNT/JNL-PRNT	WARNING	test journal pms-log/wakeup-log	Journal Printer Link

NOTE:
Since the maintenance strategy for both the JNL-PRNT (Journal Printer Link) and PMS-PRNT (PMS Printer Link) MO is the same, both of these MOs are described in the PMS-PRNT/JNL-PRNT Maintenance documentation.

MET-BD (MET Line Circuit Pack)

MO Name (in Alarm Log)	Alarm Level	Initial Command to Run[1]	Full Name of MO
MET-BD	MIN	test board PCSS sh	MET Line Circuit Pack
MET-BD	WRN	test board PCSS sh	MET Line Circuit Pack

1. Where P is the port network number (1); C is the carrier designation (for example, A, B, or C); and SS is the address of the slot in the carrier where the circuit pack is located (for example, 01, 02, ..., etc.).

Refer to XXX-BD (Common Port Circuit Pack) Maintenance documentation for circuit pack level errors. See also MET-LINE maintenance documentation for related line information.

MET-LINE (MET Line)

MO Name (in Alarm Log)	Alarm Level	Initial Command to Run[1]	Full Name of MO
MET-LINE	MINOR	test port PCSSpp l	MET Line
MET-LINE	WARNING	test port PCSSpp sh	MET Line

1. Where P is the port network number (1); C is the carrier designation (for example, A, B, or C); SS is the address of the slot in the carrier where the circuit pack is located (for example, 01, 02, ..., etc.); and pp is the 2-digit port number (for example, 01).

Electronic Station is the user-friendly term to denote the MET (Multibutton Electronic Telephone) Station Set. The MET sets were originally introduced for use in earlier PBX systems but can now be used in Generic 1 switches.

The TN735 MET Line circuit pack supports four of these METsets. Each MET set uses three pairs of wires: an analog voice pair, a transmit pair, and a receive pair. Power is sent over the transmit and receive pairs. The MET Line circuit pack supports all 10-, 20-, and 30-button sets.

MET Line interactions are shown in Figure 3-21.

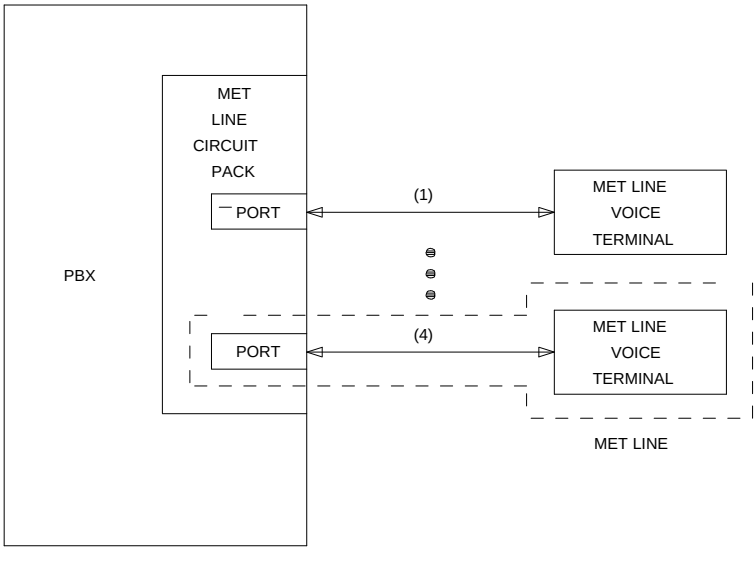

Figure 3-21. MET Line Interactions

The Recall button is used in this system as a self-test button, and, when pressed, lights all of the lamps on the MET set and runs the ringer update.

This section refers only to the MET-LINE maintenance that is performed. Note that MET-LINE maintenance is closely related to, and interacts with, the MET-BD (MET line circuit pack) maintenance in some instances. Some of the results of maintenance testing of the MET line may be affected by the health of the MET Line circuit pack. This interaction should be kept in mind when investigating the cause of reports of MET line problems.

There are instances in this section where service states of a station are mentioned. An explanation of these service states follows:

- Out-of-Service—The port (and station) have been removed from service. A busyout of a port causes it to be out-of-service.
- Ready-for-Service—Once a port on the circuit pack has been put into service, the voice terminal must communicate that it is present. The time between these two events is the time when the terminal is in the ready-for-service state.
- In Service—Once the system receives a message from the voice terminal communicating that it is present, the station is put into the in-service state. The terminal can also be forced into the in-service state if it goes off-hook while it is in the ready-for-service state.

After running the **status station** command, the status is reported as either out-of-service, in-service (as stated in the preceding list), or disconnect (the station is in the ready-for-service state).

Hardware Error Log Entries and Test to Clear Values

Table 3-207. MET Line Error Log Entries

Error Type	Aux Data	Associated Test	Alarm Level	On/Off Board	Test to Clear Value
0[1]	0	Any	Any	Any	test port PCSSpp sh r 1
1 (a)	40987	None			
18 (b)	0	busyout port PCSSpp	WARNING	OFF	release port PCSSpp
130 (c)		None	WARNING	ON	test port PCSSpp sh
257 (d)	40988	None	MIN/WRN[2]	OFF	
513 (e)	40965	Hybrid Line Station Audits Test (#61)	WARNING	OFF	test port PCSSpp sh r 4
769		Port Diagnostic Test (#35)	MIN/WRN[2]	ON	test port PCSSpp l r 3
1025		Hybrid & Conf. Circuits Test (#57)	MIN/WRN[2]	ON	test port PCSSpp l r 3
1537 (f)	40968	None	MIN/WRN[2]	OFF	
1793		TDMNPE Crosstalk Test (#6)	MIN/WRN[2]	ON	test port PCSSpp l r 3
2049(g)	32770				
2049(h)	40967				
3840(i)	40989				

1. Run the Short Test Sequence first. If all tests pass, run the Long Test Sequence. Refer to the appropriate test description and follow the recommended procedures.
2. Major or Minor alarms on this MO may be downgraded to Warning alarms based on the values used in the **set options** command.

Notes:

a. Indicates a defective data link. An off-board problem detected by port circuit. Make sure the MET set is connected, and that the EPF test passes. If data transmission problems are experienced, check for defective wiring, check for a defective voice terminal, and move voice terminal closer to the switch (in terms of feet of wire from the jack to the switch). If problem still exists, replace the circuit pack. Once the problem has been resolved, the alarm is retired due to the passing of time.

b. This error is logged when the port in question is busied out by maintenance personnel. Make sure port is released from busyout.

c. This error type indicates that the circuit pack has been removed or has been insane for more than 11 minutes. To clear the error, reinsert or replace the circuit pack.

d. This indicates that the EPF has been turned off due to the overcurrent condition at the voice terminal. Check for defective wiring, check for a damaged jack, and make sure the voice terminal is a MET set. Once the problem has been resolved, the alarm is retired due to the passing of time.

e. The particular station audit that causes this error type to be produced is the EPF inquiry audit. If the EPF inquiry receives an "epf-no-load" message a certain number of times, this error occurs and, if the EPF inquiry receives an "epf-on-ok" or an "epf-off-ok" message, it contributes to the resolution of this alarm.

   This indicates that the voice terminal has probably been disconnected or that there is a problem in the wiring to the terminal. Make sure that the voice terminal is connected or check for defective wiring to the voice terminal.

f. This indicates that something is wrong with the link to the voice terminal. An in-line maintenance error has generated an off-board Minor alarm. Ignore if there are no complaints. Otherwise, verify that the voice terminal is connected, check for defective wiring, check for a defective voice terminal, and move voice terminal closer to the switch (in terms of feet of wire from the jack to the switch). If the problem still exists, replace the circuit pack.

g. This indicates that the station went off-hook while it was in the ready-for-service state. Use the **status system** command to determine the state of the station. The off-hook should have moved the station to ready-for-service. No action is necessary.

h. This is the code that is generated when the link between the circuit pack and the voice terminal is successfully reset. No action is necessary.

i. An uplink message being logged that the EPF is one with no load on it. No action is necessary.

System Technician-Demanded Tests: Descriptions and Error Codes

Always investigate tests in the order presented in the table below when inspecting errors in the system. By clearing error codes associated with the *Port Diagnostic Test,* for example, you may also clear errors generated from other tests in the testing sequence.

For example, you may also clear errors generated from other tests in the testing sequence.

Order of Investigation	Short Test Sequence	Long Test Sequence	D/ND[1]
NPE Crosstalk Test (#6)		X	ND
Port Diagnostic Test (#35)		X	ND
MFAT Electronic Power Feed Test (#56)		X	ND
Hybrid Circuit and Conference Circuit Test (#57)		X	ND
Station Lamp Update Test (#60)	X	X	ND
Station Audits Test (#61)	X	X	ND
Ringer Update Test (#62)	X	X	ND

1. D = Destructive; ND = Nondestructive

NPE Crosstalk Test (#6)

One or more NPEs reside on each circuit pack with a TDM Bus interface. The NPE controls port connectivity and gain, and provides conferencing functions on a per port basis. The NPE Crosstalk Test verifies that this port's NPE channel talks on the selected time slot and never crosses over to time slots reserved for other connections. If the NPE is not working correctly, one-way and noisy connections may be observed. This test is part of a port's Long Test Sequence and takes about 20 to 30 seconds to complete.

Table 3-208. TEST #6 NPE Crosstalk Test

Error Code	Test Result	Description/ Recommendation
	ABORT	Could not allocate the necessary system resources to run this test. 1. Retry the command at 1-minute intervals a maximum of 5 times.
1000	ABORT	System resources required to run this test are not available. The port may be busy with a valid call. Use the **display port PCSSpp** command to determine the station extension, attendant number, or trunk group/member number of the port. Use the **status station**, **status attendant**, or **status trunk** command to determine the service state of the port. If the service state indicates that the port is in use, then the port is unavailable for certain tests. You must wait until the port is idle before retesting. Attendants are always in use (off-hook) if the handset is plugged in and the port is not busied out. 1. If the port status is idle, then retry the command at 1-minute intervals a maximum of 5 times.

Continued on next page

Table 3-208. TEST #6 NPE Crosstalk Test — *Continued*

Error Code	Test Result	Description/ Recommendation
1001	ABORT	System resources required to run this test are not available. This could be due to a failure to seize the port. 1. Retry the command at 1-minute intervals a maximum of 5 times.
1002	ABORT	The system could not allocate time slots for the test. The system may be under heavy traffic conditions or it may have time slots out-of-service due to TDM-BUS errors. Refer to TDM-BUS (TDM Bus) Maintenance documentation to diagnose any active TDM-BUS errors. 1. If system has no TDM-BUS errors and is not handling heavy traffic, repeat test at 1-minute intervals a maximum of 5 times.
1003	ABORT	The system could not allocate a tone receiver for the test. The system may be oversized for the number of Tone Detectors present or some Tone Detectors may be out-of-service. 1. Look for TTR-LEV errors in the Error Log. If present, refer to TTR-LEV (TTR Level) Maintenance documentation. 2. Look for TONE-PT errors in the Error Log. If present, refer to TONE-PT (Tone Generator) Maintenance documentation. 3. If neither condition exists, retry the test at 1-minute intervals a maximum of 5 times.
1004	ABORT	The port was seized by a valid call during the test. The test has been aborted. Use the **display port PCSSpp** command to determine the station extension, attendant number, or trunk group/member number of the port. Use the **status station**, **status attendant**, or **status trunk** command to determine the service state of the port. If the service state indicates that the port is in use, then the port is unavailable for certain tests. You must wait until the port is idle before retesting. Attendants are always in use (off-hook) if the handset is plugged in and the port is not busied out. 1. Retry the command at 1-minute intervals a maximum of 5 times.
1018	ABORT	Test disabled via administration. This only applies to analog stations. The default for this field is 'y,' so you may want to determine why it has been turned off on this station. 1. To enable the test for the particular analog station being tested, enter the **change station extension** command and change the `Test` field on the Station form from 'n' to **y**.
2000	ABORT	Response to the test request was not received within the allowable time period. 1. Retry the command at 1-minute intervals a maximum of 5 times.

Continued on next page

Table 3-208. TEST #6 NPE Crosstalk Test — *Continued*

Error Code	Test Result	Description/ Recommendation
2100	ABORT	System resources required to run this test are not available. This could be due to a failure to seize the port. 1. Retry the command at 1-minute intervals a maximum of 5 times.
2020	ABORT	The test did not run due to an already existing error on the specific port or a more general circuit pack error. 1. Examine Error Log for existing errors against this port or the circuit pack and attempt to diagnose the already existing error.
Any	FAIL	This test can fail due to on-board or off-board problems. Off-board problems of concern include EXP-INTF faults, TDM-BUS faults, and faults associated with the tone detectors/tone generators. Clear all off-board problems before replacing the board. Keep in mind that a TDM-BUS problem is usually the result of a faulty board connected to the backplane or bent pins on the backplane. 1. Look for TDM-BUS errors in the error log. If present, refer to the TDM-BUS Maintenance documentation. 2. Look for TONE-BD and/or TONE-PT errors in the error log. If present, refer to the TONE-BD Maintenance documentation and the TONE-PT Maintenance documentation. 3. Test the board when the faults from steps 1 and 2 are cleared. Replace the board only if the test fails.
	PASS	The port is correctly using its allocated time slots. User-reported troubles on this port should be investigated using other port tests and examining station, trunk, or external wiring.
0	NO BOARD	The test could not relate the internal ID to the port (no board). This could be due to incorrect translations, no board is inserted, an incorrect board is inserted, or an insane board is inserted. 1. Check to ensure that the board translations are correct. Use the **list config** command, and resolve any problems that are found. 2. If the board was found to be correctly inserted in step 1, issue the **busyout board** command. 3. Issue the **reset board** command. 4. Issue the **release busy board** command. 5. Issue the **test board long** command. This should re-establish the linkage between the internal ID and the port. If this is not the case, check to ensure that there is a valid board inserted.

Port Diagnostic Test (#35)

This test checks a port's battery feed circuitry. The battery feed circuitry is tested for proper battery voltage by testing the switchhook state. In response to the test message, the on-board firmware terminates the line and checks for switch-hook presence. The termination is then removed, and a check is made for no switch-hook presence. The MET set must be on-hook for the test to execute.

Table 3-209. TEST #35 Port Diagnostic Test

Error Code	Test Result	Description/ Recommendation
	ABORT	Internal system error. 1. Retry the command at 1-minute intervals a maximum of 5 times.
1000	ABORT	System resources required to run this test are not available. The port may be busy with a valid call. Use the **display port PCSSpp** command to determine the station extension, attendant number, or trunk group/member number of the port. Use the **status station**, **status attendant**, or **status trunk** command to determine the service state of the port. If the service state indicates that the port is in use, then the port is unavailable for certain tests. You must wait until the port is idle before retesting. Attendants are always in use (off-hook) if the handset is plugged in and the port is not busied out. 1. If the port status is idle, then retry the command at 1-minute intervals a maximum of 5 times.
1004	ABORT	The port was seized by a valid call during the test. The test has been aborted. Use the **display port PCSSpp** command to determine the station extension of the port. Use the **status station** command to determine the service state of the port. If the service state indicates that the port is in use, then the port is unavailable for certain tests. You must wait until the port is idle before retesting. **NOTE:** The battery feed circuitry is tested for proper battery voltage by testing the switchhook state. In response to the test message, the on-board firmware terminates the line and checks for switch-hook presence. The termination is then removed, and a check is made for no switch-hook presence. The MET set must be on-hook for the test to execute. 1. If the port status is idle, then retry the command at 1-minute intervals a maximum of 5 times.
1018	ABORT	Test disabled via software patch.

Continued on next page

Table 3-209. TEST #35 Port Diagnostic Test — *Continued*

Error Code	Test Result	Description/ Recommendation
2000	ABORT	This port may have been busied out by system technician. 1. Look in the Error Log for Error Type 18 (port busied out) for this port. If this error type is present, then release the port via the **release station <extension>** command and run the test again. 2. Make sure that the terminal is connected. 3. Retry the command at 1-minute intervals a maximum of 5 times.
2100	ABORT	Could not allocate the necessary system resources to run this test. This could be due to a failure to seize the port. 1. Retry the command at 1-minute intervals a maximum of 5 times.
	FAIL	Battery Feed Test failed. This port is out-of-service. 1. Other ports on this circuit pack are not affected. Place user on a different port, if available, until a replacement circuit pack can be obtained. 2. Replace circuit pack when available.
	PASS	Battery Feed Test passed. Current flow is properly detected for this port. 1. If users are reporting problems, examine connections to the port.
0	NO BOARD	The test could not relate the internal ID to the port (no board). This could be due to incorrect translations, no board is inserted, an incorrect board is inserted, or an insane board is inserted. 1. Check to ensure that the board translations are correct. Use the **list config** command, and resolve any problems that are found. 2. If the board was found to be correctly inserted in step 1, issue the **busyout board** command. 3. Issue the **reset board** command. 4. Issue the **release busy board** command. 5. Issue the **test board long** command. This should re-establish the linkage between the internal ID and the port. If this is not the case, check to ensure that there is a valid board inserted.

MET Electronic Power Feed (#56)

In this test, the software requests that the EPF be turned on for a given port. An attempt is made to turn on the power unit to the station. If no current is being drawn, this probably indicates that the station is not connected. If an overcurrent condition is sensed (that is, too much current is being drawn), this may indicate a

short in the loop or a defective voice terminal. Depending on what condition is sensed, a message is returned stating that either the EPF was turned on successfully with no problems or that an overcurrent condition is sensed. This test is repeated once more five seconds later. If either test is not successful, the test aborts.

Although this test will never actually return a fail result (except for the internal system error), an error type 257 entry will be made in the error log when the test has completed if the overcurrent case is detected by the hardware.

Table 3-210. TEST #56 MET Electronic Power Feed Test

Error Code	Test Result	Description/ Recommendation
	ABORT	The test was aborted due to an internal system error on a software request to the board. 1. Retry the command at 1-minute intervals a maximum of 5 times.
1000	ABORT	System resources required to run this test are not available. The port may be busy with a valid call. Use the **display port PCSSpp** command to determine the station extension, attendant number, or trunk group/member number of the port. Use the **status station**, **status attendant**, or **status trunk** command to determine the service state of the port. If the service state indicates that the port is in use, then the port is unavailable for certain tests. You must wait until the port is idle before retesting. Attendants are always in use (off-hook) if the handset is plugged in and the port is not busied out. 1. If the port status is idle, then retry the command at 1-minute intervals a maximum of 5 times.
	FAIL	The test failed with an internal error while it was attempting to turn on the EPF. 1. Retry the command at 1-minute intervals a maximum of 5 times.
	PASS	EAF Test passed. The message to turn on the power to the station was successfully sent to the port. 1. Although this test never returns a FAIL result, after running this test, the Error Log should be checked for any entries with Error Type 257 to examine the real results of this test. 2. If Error Type 257 does not appear in the Error Log within 10 seconds after completion of this test, it is safe to assume that the test sensed no problems with the power to the station. To verify that the station is powered up correctly, run a self-test on the station, if available, and check that all the feature buttons are operating. 3. If Error Type 257 appears in the Error Log, this indicates some problem with the power to the station. The system technician should check for a short in the wiring, a damaged jack, a defective voice terminal, or an incorrect type of terminal.

Continued on next page

Table 3-210. TEST #56 MET Electronic Power Feed Test — *Continued*

Error Code	Test Result	Description/ Recommendation
0	NO BOARD	The test could not relate the internal ID to the port (no board). This could be due to incorrect translations, no board is inserted, an incorrect board is inserted, or an insane board is inserted. 1. Check to ensure that the board translations are correct. Use the **list config** command, and resolve any problems that are found. 2. If the board was found to be correctly inserted in step 1, issue the **busyout board** command. 3. Issue the **reset board** command. 4. Issue the **release busy board** command. 5. Issue the **test board long** command. This should re-establish the linkage between the internal ID and the port. If this is not the case, check to ensure that there is a valid board inserted.

MET Circuit and Conference Circuit Test (#57)

The MET Circuit Test checks the amount of reflection from the MET loop around circuitry and a Conference Test. The Tone-Clock circuit pack places a 1004-Hz tone on a time slot that the port circuit is listening on. A General Purpose Tone Detector (GPTD) is connected to another time slot that the same port circuit is talking on. The on-board microprocessor places the port in the loop around mode and the GPTD measures the level of the reflected signal.

The Conference Test is performed after the Circuit Test. The Conference Circuit Test verifies that the NPE is able to listen to several test tones and correctly conference them together, and the test is executed in two parts. The first half of the test checks the operation of the NPE's first three conference channels. The NPE is put in the loop around mode and instructed to talk on a selected time slot and to listen to the 1004-Hz tone using the first three conference channels. The signal level and noise level of the conferenced output are then measured using a GPTD and checked to verify that they are within an acceptable range.

The second half of the Conference Test checks the operation of the NPE's remaining four conference channels and follows the same procedure as above.

Table 3-211. TEST #57 MET Circuit and Conference Circuit Test

Error Code	Test Result	Description/ Recommendation
	ABORT	Could not allocate the necessary system resources to run this test. 1. Retry the command at 1-minute intervals a maximum of 5 times.
1000	ABORT	System resources required to run this test are not available. The port may be busy with a valid call. Use the **display port PCSSpp** command to determine the station extension, attendant number, or trunk group/member number of the port. Use the **status station**, **status attendant**, or **status trunk** command to determine the service state of the port. If the service state indicates that the port is in use, then the port is unavailable for certain tests. You must wait until the port is idle before retesting. Attendants are always in use (off-hook) if the handset is plugged in and the port is not busied out. 1. If the port status is idle, then retry the command at 1-minute intervals a maximum of 5 times.
1001	ABORT	System resources required to run this test were not available. This could be due to a failure to seize the port. 1. Retry the command at 1-minute intervals a maximum of 5 times.
1002	ABORT	The system could not allocate time slots for the test. The system may be under heavy traffic conditions or it may have time slots out-of-service due to TDM-BUS errors. Refer to TDM-BUS (TDM Bus) Maintenance documentation to diagnose any active TDM-BUS errors. 1. If system has no TDM-BUS errors and is not handling heavy traffic, repeat test at 1-minute intervals a maximum of 5 times.
1003	ABORT	The system could not allocate a tone receiver for the test. The system may be oversized for the number of Tone Detectors present or some Tone Detectors may be out-of-service. 1. Look for TTR-LEV errors in the Error Log. If present, refer to TTR-LEV (TTR Level) Maintenance documentation. 2. Look for TONE-PT errors in the Error Log. If present, refer to TONE-PT (Tone Generator) Maintenance documentation. 3. If neither condition exists, retry the test at 1-minute intervals a maximum of 5 times.

Continued on next page

Table 3-211. TEST #57 MET Circuit and Conference Circuit Test — *Continued*

Error Code	Test Result	Description/ Recommendation
1004	ABORT	The port was seized by a valid call during the test. The test has been aborted. Use the **display port PCSSpp** command to determine the station extension, attendant number, or trunk group/member number of the port. Use the **status station**, **status attendant**, or **status trunk** command to determine the service state of the port. If the service state indicates that the port is in use, then the port is unavailable for certain tests. You must wait until the port is idle before retesting. Attendants are always in use (off-hook) if the handset is plugged in and the port is not busied out. 1. Retry the command at 1-minute intervals a maximum of 5 times.
2000	ABORT	Response to the test request was not received within the allowable time period. 1. Retry the command at 1-minute intervals a maximum of 5 times.
2012	ABORT	Internal System Error.
2103	ABORT	The system could not make the conference connection for the test. 1. Retry the command at 1-minute intervals a maximum of 5 times.
7	FAIL	The conference circuit test failed. The conference circuit test is performed only if the hybrid test passes. The conference circuit test verifies that the network processing element (NPE) is able to correctly conference several test tones together. The test is executed in two parts. The first half of the test verifies the operation of the NPE's first three conference channels, while the second half verifies the NPE's remaining four conference channels. The test puts the NPE in loop around mode and instructs it to talk on a specified time slot while listening to a 1004 Hz tone, using the conference channels. A GPTD then measures the signal and noise levels of the conferenced output and reports whether or not these are within an acceptable range. The failure may be due to off-board circumstances, the most common of which is an off-hook occurring during the test. It is possible that the port may still be functional from a user's point of view. Also, check the error logs against the GPTD-BD, the TONE-BD, and the TONE-PT. 1. This error can be caused by a disconnected terminal. First, ensure that the terminal is connected and the wiring is OK. 2. Then, issue the **display port** and the **station status** commands to determine if the station is idle. If it is idle, issue the **test port** command for this port. 3. If test continues to fail, issue the **busyout port** and the **release port** commands, and then retest the port.

Continued on next page

Table 3-211. TEST #57 MET Circuit and Conference Circuit Test — *Continued*

Error Code	Test Result	Description/ Recommendation
57	FAIL	Hybrid Circuit Test failed. This could result in noisy or bad connections. 1. Run circuit pack tests to check the Tone Generator circuit pack and the Tone Detector circuit pack, using **test board PCSS short** command. 2. Resolve any problems that are detected on the Tone Generator circuit pack or Tone Detector circuit pack. 3. If the Tone Generator and Tone Detector circuit packs are functioning properly, and the test still fails, replace the MET Line circuit pack. **NOTE:** If the MET Circuit and Conference Circuit Test fails for all ports on a circuit pack, a -5 volt power problem is indicated.
	PASS	Hybrid Circuit and Conference Circuit Test passed. The hybrid circuitry is transmitting properly. 1. If complaints still exist, investigate by using other port tests, and by examining the station, wiring, and connections.
0	NO BOARD	The test could not relate the internal ID to the port (no board). This could be due to incorrect translations, no board is inserted, an incorrect board is inserted, or an insane board is inserted. 1. Check to ensure that the board translations are correct. Use the **list config** command, and resolve any problems that are found. 2. If the board was found to be correctly inserted in step 1, issue the **busyout board** command. 3. Issue the **reset board** command. 4. Issue the **release busy board** command. 5. Issue the **test board long** command. This should re-establish the linkage between the internal ID and the port. If this is not the case, check to ensure that there is a valid board inserted.

MET Line Station Lamp Updates Test (#60)

For this test, the software lights the lamps on the terminal based on the status record contained in the processor. The lamp updates run only if the station is in-service.

Table 3-212. TEST #60 MET Line Station Lamp Updates Test

Error Code	Test Result	Description/ Recommendation
1	ABORT	This port may have been busied out by system technician. 1. Look in the Error Log for Error Type 18 (port busied out) for this port. If this error type is present, then release the port via the **release station <extension>** command and run the test again. 2. Make sure that the terminal is connected. 3. Retry the command at 1-minute intervals a maximum of 5 times.
2	ABORT	Internal System Error. 1. Retry the command at 1-minute intervals a maximum of 5 times.
3	ABORT	Station is in ready-for-service or out-of-service state. This may be due to wiring or an unplugged or defective set. 1. Make sure terminal is connected and the wiring is correct. 2. Retry the command at 1-minute intervals a maximum of 5 times.
1000	ABORT	System resources required to run this test are not available. The port may be busy with a valid call. Use the **display port PCSSpp** command to determine the station extension, attendant number, or trunk group/member number of the port. Use the **status station**, **status attendant**, or **status trunk** command to determine the service state of the port. If the service state indicates that the port is in use, then the port is unavailable for certain tests. You must wait until the port is idle before retesting. Attendants are always in use (off-hook) if the handset is plugged in and the port is not busied out. 1. If the port status is idle, then retry the command at 1-minute intervals a maximum of 5 times.
	FAIL	Internal System Error. 1. Retry the command at 1-minute intervals a maximum of 5 times.
	PASS	MET Line Station Lamp Updates completed successfully. 1. If complaints still exist, investigate by using other circuit pack tests, and by examining the station, wiring, and connections.

Continued on next page

Table 3-212. TEST #60 MET Line Station Lamp Updates Test — *Continued*

Error Code	Test Result	Description/ Recommendation
0	NO BOARD	The test could not relate the internal ID to the port (no board). This could be due to incorrect translations, no board is inserted, an incorrect board is inserted, or an insane board is inserted. 1. Check to ensure that the board translations are correct. Use the **list config** command, and resolve any problems that are found. 2. If the board was found to be correctly inserted in step 1, issue the **busyout board** command. 3. Issue the **reset board** command. 4. Issue the **release busy board** command. 5. Issue the **test board long** command. This should re-establish the linkage between the internal ID and the port. If this is not the case, check to ensure that there is a valid board inserted.

MET Line Station Audits Test (#61)

This is a series of three tests that are classified as audits. These audits abort if attempted on an out-of-service station. The tests are as follows:

- Switchhook Audit—This is an update of the SPE records according to the circuit packs' records.
- Bad Scan Inquiry—A message is sent uplink that contains a count that is generated due to certain events relating to the link conditions. This is an indication of data transmission problems between the MET Line circuit pack and the voice terminal.
- EPF Inquiry—The status of the EPF is sent uplink. Possible conditions are: EPF-on-ok, EPF-off, EPF-no-load, and EPF-on-overcurrent.

Although this test will never actually return a fail result (except for the internal system error), it is possible that it will enter error types 257 (over current) or 513 (open circuit) into the error log. To determine if there are any problems that do not show up in the test result, look for these error types in the error log. If these errors appear in the error log or if user complaints still exist, investigate by using other circuit pack tests and by examining the station, the wiring, and the connections.

Table 3-213. TEST #61 MET Line Station Audits Test

Error Code	Test Result	Description/ Recommendation
	ABORT	Internal System Error.
1	ABORT	The test was aborted due to an internal system error during the switchhook audit.
2		The test was aborted due to an internal system error during the bad scan inquiry.
3		The test was aborted due to an internal system error during the EPF audit inquiry. 1. Make sure that the station is not in an out-of-service state. 2. Retry the command at 1-minute intervals for a maximum of 5 times.
1000	ABORT	System resources required to run this test are not available. The port may be busy with a valid call. Use the **display port PCSSpp** command to determine the station extension, attendant number, or trunk group/member number of the port. Use the **status station**, **status attendant**, or **status trunk** command to determine the service state of the port. If the service state indicates that the port is in use, then the port is unavailable for certain tests. You must wait until the port is idle before retesting. Attendants are always in use (off-hook) if the handset is plugged in and the port is not busied out. 1. If the port status is idle, then retry the command at 1-minute intervals a maximum of 5 times.
1004	ABORT	The port was seized by a valid call during the test. The test has been aborted. Use the **display port PCSSpp** command to determine the station extension, attendant number, or trunk group/member number of the port. Use the **status station**, **status attendant**, or **status trunk** command to determine the service state of the port. If the service state indicates that the port is in use, then the port is unavailable for certain tests. You must wait until the port is idle before retesting. Attendants are always in use (off-hook) if the handset is plugged in and the port is not busied out. 1. Retry the command at 1-minute intervals a maximum of 5 times.
2000	ABORT	Response to the test request was not received within the allowable time period. 1. Retry the command at 1-minute intervals a maximum of 5 times.
	FAIL	The test failed due to an internal system error. 1. Retry the command at 1-minute intervals a maximum of 5 times.

Continued on next page

Table 3-213. TEST #61 MET Line Station Audits Test — *Continued*

Error Code	Test Result	Description/ Recommendation
	PASS	Hybrid Line Station Audits passed. 1. Although this test always returns a PASS result, it may enter Error Types 257 or 513 into the Error Log. To determine if there are any problems that don't show up in the test result, look for these error types in the Error Log. 2. If these errors appear in the Error Log, or if user complaints still exist, investigate by using other circuit pack tests, and by examining the station, wiring, and connections.
0	NO BOARD	The test could not relate the internal ID to the port (no board). This could be due to incorrect translations, no board is inserted, an incorrect board is inserted, or an insane board is inserted. 1. Check to ensure that the board translations are correct. Use the **list config** command, and resolve any problems that are found. 2. If the board was found to be correctly inserted in step 1, issue the **busyout board** command. 3. Issue the **reset board** command. 4. Issue the **release busy board** command. 5. Issue the **test board long** command. This should re-establish the linkage between the internal ID and the port. If this is not the case, check to ensure that there is a valid board inserted.

MET Line Ringer Update Test (#62)

In this update, a "ringer on" or a "ringer off" message is sent to the firmware to start and stop the ringer on the set.

Table 3-214. TEST #62 MET Line Ringer Update Test

Error Code	Test Result	Description/ Recommendation
3	ABORT	This port may have been busied out by system technician. 1. Look in the Error Log for Error Type 18 (port busied out) for this port. If this error type is present, then release the port via the **release station <extension>** command and run the test again. 2. Make sure that the terminal is connected. 3. Retry the command at 1-minute intervals a maximum of 5 times.
1000	ABORT	System resources required to run this test are not available. The port may be busy with a valid call. Use the **display port PCSSpp** command to determine the station extension, attendant number, or trunk group/member number of the port. Use the **status station**, **status attendant**, or **status trunk** command to determine the service state of the port. If the service state indicates that the port is in use, then the port is unavailable for certain tests. You must wait until the port is idle before retesting. Attendants are always in use (off-hook) if the handset is plugged in and the port is not busied out. 1. If the port status is idle, then retry the command at 1-minute intervals a maximum of 5 times.
	FAIL	Internal System Error. 1. Retry the command at 1-minute intervals a maximum of 5 times.
	PASS	Hybrid Station Ringer Update passed. 1. If complaints still exist, investigate using other circuit pack tests, and by examining the terminal, wiring, and connections.
0	NO BOARD	The test could not relate the internal ID to the port (no board). This could be due to incorrect translations, no board is inserted, an incorrect board is inserted, or an insane board is inserted. 1. Check to ensure that the board translations are correct. Use the **list config** command, and resolve any problems that are found. 2. If the board was found to be correctly inserted in step 1, issue the **busyout board** command. 3. Issue the **reset board** command. 4. Issue the **release busy board** command. 5. Issue the **test board long** command. This should re-establish the linkage between the internal ID and the port. If this is not the case, check to ensure that there is a valid board inserted.

MIS (Management Information System)

MO Name (in Alarm Log	Alarm Level	Initial Command to Run	Full Name of MO
MIS	WRN	release mis	Management Information System

The Management Information System (MIS)/Call Management System (CMS) MO is used only for administering MIS translations, such as trunks and stations. There are no hardware failures associated with this MO.

NOTE:
To diagnose MIS link hardware errors and alarms, see PKT-INT (Packet Interface).

The MIS/CMS is an adjunct processor that collects ACD data sent from the system. To change MIS translations, a system administrator must first enter a **busyout mis** command at the terminal. When the MIS is busied out, the system stops sending ACD data to the MIS, and a Warning alarm is raised. When finished, a **release mis** command should be entered at the terminal. This clears the Warning alarm and allows the switch to send ACD data to the MIS.

Error Log Entries and Test to Clear Values

Error Type	Aux Data	Associated Test	Alarm Level	On/Off Board	Test to Clear Value
0[1]	0	Any	Any	Any	release mis
18(a)	0	busyout mis	WARNING	ON	release mis

1. Run the Short Test Sequence first. If all tests pass, run the Long Test Sequence. Refer to the appropriate test description and follow the recommended procedures.

Note:

a. When the **busyout MIS** command is issued, no data is sent to the MIS/CMS regardless of the link state. To allow data to be sent to MIS/CMS, a **release mis** command must be issued from the terminal.

MMI-BD

MO Name (in Alarm Log)	Alarm Level	Initial Command to Run[1]	Full Name of MO
MMI-BD	MAJOR	test board PCSS l r#	Multimedia Interface Circuit Pack
MMI-BD	MINOR	test board PCSS l r#	Multimedia Interface Circuit Pack
MMI-BD[2]	WARNING	test board PCSS s r#	Multimedia Interface Circuit Pack

1. Where P is the port network number (1 for PPN); C is the carrier designation (for example, A, B, or C); and SS is the address of the slot in the carrier where the circuit pack is located (for example, 01, 02, ..., and so forth).
2. Refer to XXX-BD (Common Port Board).

The Multimedia Interface Circuit Pack (TN787D or later) provides a number of H.221 protocol terminations for bit streams received from the TDM bus. The Multimedia Interface demultiplexes the H.221 bit stream (audio, video, data, control, and indication signals) and transmits the bit streams onto the TDM bus so that the appropriate circuit packs can process them.

The Multimedia Interface circuit pack is commonly referred to as the MMI pack for H.221 protocol termination. It is also called the MMCH circuit pack. There are 32 ports (also called resources) on the circuit pack. See MMI-PT for maintenance of these resources.

The MMI circuit pack contains 4 digital signal processors that manage the 32 resources.

NOTE:
Refer to "Troubleshooting Multimedia Call Handling (MMCH)" in Chapter 1, "Maintenance for R6csi Compact Modular Cabinets" for MMCH troubleshooting information.

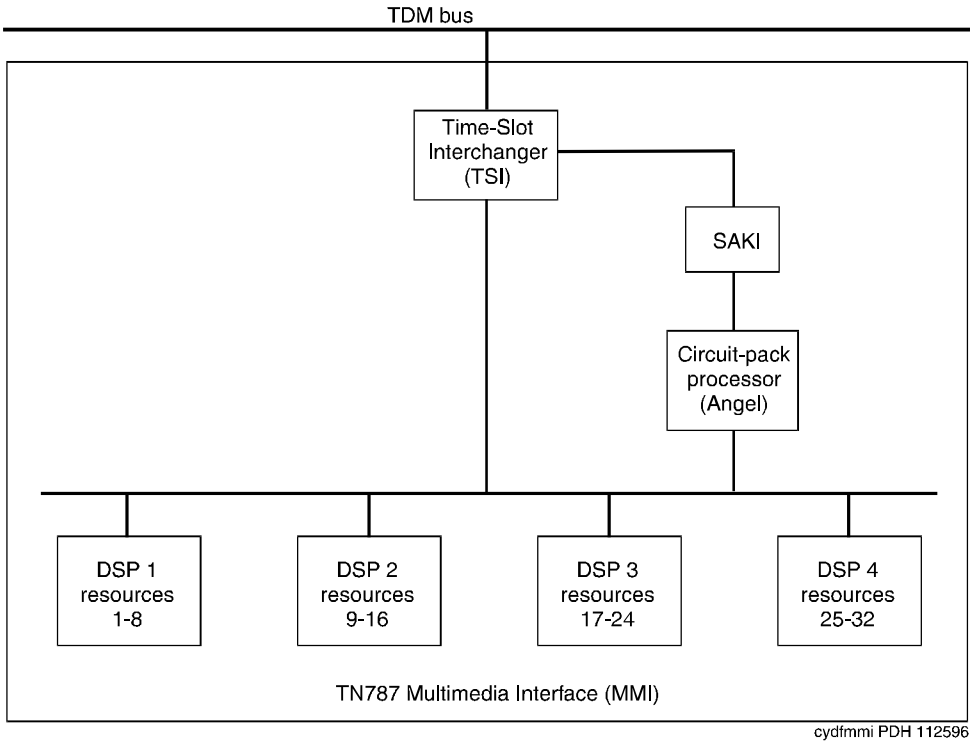

Figure 3-22. TN787 Multimedia Interface (MMI) Circuit Pack

Error Log Entries and Test to Clear Values

Table 3-215. MMI-BD Error Log Entries

Error Type	Aux Data	Associated Test	Alarm Level	On/Off Board	Test to Clear Value
0[1]	0	Any	Any	Any	test board PCSS sh r 1
1 (a)	Any	None	MIN	ON	
18 (b)	0	Busyout board PCSS	WNG	OFF	release board PCSS
217 (c)	0	None	WNG	ON	
257 (d)	65535	Control Channel Loop Test (#52)	MIN	ON	test board PCSS r 3
513 (e)	4352 to 4357	Uplink error from pack			
769 (f)	Any	MMI Synchronization Status Test (#1123)	None		
1281 (g)	Any	Circuit Pack Restart Test (#594)	MAJ	ON	
1538 (h)	Any	Software detected error	MIN	ON	
1793 (i)	ANY	TSI XTalk (#6)	MIN	ON	test board PCSS l r 3
2049 (j)	Any	TSI Loop (#1108)	MAJ	ON	test board PCSS l r 3

1. Run the short test sequence first. If all tests pass, run the long test sequence. Refer to the appropriate test description and follow the recommended procedures.

Notes:

a. The circuit pack stopped functioning or it was physically removed from the system. The alarm logs approximately 11 minutes after the circuit pack has been removed and/or the SAKI Sanity Test (#53) fails.

   If the circuit pack is in the system and the red LED is on, follow the instructions for a red alarm in "Control Circuit Packs" in "Maintenance for R6csi Compact Modular Cabinets".

b. This circuit pack has been busied out using the **busyout board PCSS** command.

c. There are more than four MMI circuit packs in the system. Remove the circuit pack that generated the error in the error log by locating the slot indicated by the error.

d. Indicates transient communication problems between the switch and this circuit pack. Execute the **test board PCSS** command and refer to the repair procedures for the Control Channel Looparound Test (#52) in the XXX-BD section.

e. The circuit pack detected an Angel on-board hardware failure. The reported aux data values correspond to the following detected errors:
4352 - External RAM error
4253 - Internal RAM error
4355 - ROM Checksum error
4357 - Instruction set error
Reset the circuit pack by using the **busyout board PCSS**, **reset board PCSS**, and **release board PCSS** commands. When reset, the circuit pack executes a set of tests to detect the presence of any of the above faults. The detection of one these errors during initialization causes the circuit pack to lock up and appear insane to the system. See the repair procedures in note b) for Error Type 1.

f. This MMI circuit pack reported a loss of MMI synchronization. Refer to Test (#1123) for repair procedures.

g. A failure of the time slot interchanger has been detected. Reset the circuit pack using the **busyout board PCSS**, **reset board PCSS**, and **release board PCSS** commands. If the reset passes, then the on-board circuitry is healthy. Retire the alarm using the **test board PCSS long clear** command followed by **release board PCSS**.

h. The circuit pack is hyperactive; that is, it is flooding the switch with messages sent over the control channel. The circuit pack is taken out of service when a threshold number of these errors is reported to the switch. Clear the alarm using the following commands: **busyout board PCSS**, **reset board PCSS**, **test board PCSS long clear**, **release board PCSS**. If the error recurs within 10 minutes, replace the circuit pack.

i. The TSI Cross Talk Test (#6) failed. See the description of this test and follow the repair procedures.

j. The TSI Looparound Test (#1108) failed. See the description of this test and follow the repair procedures.

System Technician-Demanded Tests: Descriptions and Error Code

Always investigate tests in the order presented in the table below when inspecting errors in the system. By clearing error codes associated with the TSI Crosstalk Test (#6), for example, you may also clear errors generated from other tests in the testing sequence.

Table 3-216. System Technician-Demanded Tests: MMI-BD

Order of Investigation	Short Test Sequence	Long Test Sequence	Reset Board Sequence	D/ND[1]
TSI Crosstalk (#6)		X		ND
TSI Looparound Test (#1108)		X		ND
MMI SYNC Status Test (#1123)	X			ND
MMI SYNC Status Test (#1122)		X		ND
Control Channel Looparound Test (#52)[2]	X	X		ND
SAKI Sanity Test (#53)[2]			X	D

1. D = Destructive, ND = Non-destructive
2. Refer to the repair procedure described in XXX-BD (Common Port Circuit Pack) for a description of this test.

TSI Crosstalk Test (#6)

This test is non-destructive. The Time Slot Interchanger (TSI) chip controls connectivity to the TDM bus. The TSI Cross Talk Test verifies that this TSI talks on the selected TDM bus time slot and never crosses over to time slots reserved for other connections. If the TSI is not working correctly, one-way and noisy connections may occur. If the test passes, then the TSI is able to communicate over the TDM bus. This test is part of the circuit pack's demand and scheduled long test sequence, and takes approximately 20 to 30 seconds to complete.

Table 3-217. TEST #6 TSI Crosstalk Test

Error Code	Test Result	Description/Recommendation
	ABORT	Internal system error. This is an abnormal abort. 1. Retry the command at 1-minute intervals a maximum of 5 times.
1002	ABORT	The system could not allocate time slots for the test, the traffic load on the system is very high, or the time slots are out-of-service due to TDM-BUS errors. Refer to "TDM-BUS (TDM Bus)" to diagnose any active TDM Bus errors. 1. If the system has no TDM-BUS errors and is not handling heavy traffic, repeat the test at 1-minute intervals a maximum of 5 times.

Continued on next page

Table 3-217. TEST #6 TSI Crosstalk Test — *Continued*

Error Code	Test Result	Description/Recommendation
1003	ABORT	The system could not allocate a tone detector for the test. The system is oversized for the number of tone detectors present, or some tone detectors are out-of-service. 1. Resolve any "TTR-LEV (TTR Level)" errors in the Error Log. 2. Resolve any "TONE-PT (Tone Generator)" errors in the Error Log. 3. If neither condition exists, retry the test at 1-minute intervals a maximum of 5 times.
2000	ABORT	Response to the test was not received from the MMI-BD circuit pack within the allowable time period. 1. If this result occurs repeatedly, attempt to reset the circuit pack if the other ports are not in use. Reset the circuit pack by issuing the **busyout board PCSS**, **reset board PCSS**, followed by the **release board PCSS** commands. 2. If this result occurs again, replace the circuit pack.
2012	ABORT	Internal system error. This is an abnormal abort.
2100	ABORT	Could not allocate the necessary resources to run this test. This is an abnormal abort. 1. Retry the command at 1-minute intervals a maximum of 5 times.
	FAIL	The TSI was found to be transmitting in error. This causes noisy and unreliable connections. 1. Replace the circuit pack.
	PASS	The TSI is correctly using its allocated time slots.

TSI Looparound Test (#1108)

This test is non-destructive. During this test, the MMI's Time Slot Interchanger (TSI) is listens to a TDM timeslot. A digital count tone loops back in the TSI and onto another TDM timeslot without passing through any resource hardware. A tone detector port verifies the looped data. If the digital count is correct, then the test passes. The test is done for both TDM buses. Failures indicate that the TSI is unreliable.

Table 3-218. TEST #1108 TSI Looparound Test

Error Code	Test Result	Description/Recommendation
	ABORT	Internal system error. This is an abnormal abort. 1. Retry the command at 1-minute intervals a maximum of 5 times.
1002	ABORT	The system could not allocate time slots for the test. Either the traffic load on the system is very high or time slots is out-of-service due to TDM-BUS errors. Refer to "TDM-BUS (TDM Bus)" to diagnose any active TDM Bus errors. 1. If the system has no TDM-BUS errors and is not handling heavy traffic, repeat the test at 1-minute intervals a maximum of 5 times.
1003	ABORT	The system could not allocate a tone detector for the test. The system may be oversized for the number of Tone Detectors present, or some Tone Detectors may be out-of-service. 1. Resolve any "TTR-LEV (TTR Level)" errors in the Error Log. 2. Resolve any "TONE-PT (Tone Generator)" errors in the Error Log. 3. If neither condition exists, retry the test at 1-minute intervals a maximum of 5 times.
2000	ABORT	Response to the test was not received from the Tone Detector circuit pack within the allowable time period. 1. If this result occurs repeatedly, attempt to reset the circuit pack (if the other ports are not in use). Reset the circuit pack by issuing the **busyout board PCSSpp** and the **reset board PCSSpp** commands followed by the **release board PCSS** command. 2. If this result occurs again, replace the circuit pack.
2012	ABORT	Internal system error. This is an abnormal abort.
2100	ABORT	Could not allocate the necessary resources to run this test. This is an abnormal abort. 1. Retry the command at 1-minute intervals a maximum of 5 times.
	FAIL	The TSI was found to be transmitting in error, causing noisy and unreliable connections. 1. Replace the circuit pack.
	PASS	The TSI is correctly using its allocated time slots.

MMI Synchronization Status Test (#1122 and 1123)

This test is non-destructive. To support applications involving multiple MMI circuit packs, the appropriate MMI circuit packs must be synchronized with one another. One such circuit pack is designated as the master sync source, which provides the synchronization signal onto the TDM bus. The other MMI circuit packs in the system listen to this signal.

This test monitors this synchronization state. The test fails if the MMI circuit pack is not in sync. The test passes with auxiliary code 1100 if the MMI circuit pack is in sync and is providing the synchronization signal for the system. The test also passes with an auxiliary code of 1101 if the MMI circuit pack is in sync and listening to the sync signal. MMI circuit packs do not lose the synchronization signal unless an MMI circuit pack is either pulled out of the system or reset by using a technician command.

Test #1122 runs when the **long** option of the **test board** command is entered, initiating the recovery of synchronization. Test #1123 runs when the **short** option of the **test board** command is entered, giving the status of the synchronization. You need not necessarily run the **long** option since synchronization signal recovery should be taking place within software running in the background. Use the **long** option only if synchronization is not established within 5 minutes of investigating the problem.

Table 3-219. TEST #1122/1123 MMI Synchronization Status Test

Error Code	Test Result	Description/Recommendation
	ABORT	Internal system error. This is an abnormal abort. 1. Retry the command at 1-minute intervals a maximum of 5 times.
2000	ABORT	A response to the test was not received from the MMI circuit pack within the allowable time period. 1. If this result occurs repeatedly and the MMI circuit pack is idle, reset the circuit pack using **busyout board PCSS**, then **reset board PCSS**, followed by **release board PCSS**. 2. Rerun the test; if the same result occurs again, replace the MMI circuit pack.
2012	ABORT	Internal system error
2100	ABORT	Could not allocate the necessary resources to run this test. This is an abnormal abort. 1. Retry the command at 1-minute intervals a maximum of 5 times.

Continued on next page

Table 3-219. TEST #1122/1123 MMI Synchronization Status Test — ***Continued***

Error Code	Test Result	Description/Recommendation
	FAIL	The MMI circuit pack is out of MMI synchronization. Run the **long** option of the **test board** command. 1. Wait up to 5 minutes, and then reset the circuit pack with these commands: **busyout board PCSS**, then **reset board PCSS**, followed by **release board PCSS**. 2. Rerun the test; if the same result occurs again, replace the circuit pack.
1100	PASS	The MMI circuit pack is providing the synchronization correctly. This MMI circuit pack is designated as the Master Sync source.
1101	PASS	The MMI circuit pack is listening to the synchronization signal correctly.

Control Channel Looparound Test (#52)

Refer to the repair procedure described in the XXX-BD (Common Port Circuit Pack) maintenance documentation as Control Channel Looparound Test (#52).

SAKI Sanity Test (#53)

Refer to the repair procedure described in the XXX-BD (Common Port Circuit Pack) maintenance documentation as SAKI Sanity Test (#53).

MMI-LEV (Multimedia Interface Resource Level)

MO Name (in Alarm Log)	Alarm Level	Initial Command to Run	Full Name of MO
MMI-LEV	MAJOR	See "Resolving MMI-LEV Errors/Alarms" (below)	MMI-LEV

The Multimedia Interface Resource Level MO monitors MMI efficiency by tracking the number of MMI ports that are in-service, and then comparing that number with the value entered in the `MMIs` field on the System-Parameters Maintenance form. This `MMIs` field is located under the Minimum Maintenance Threshold section. The `MMIs` field contains the minimum number of MMI ports needed for the Multimedia Call Handling (MMCH) feature to run efficiently and is an administrable field. This field must contain a minimum threshold number for MMI port capacity of between 0-128. The MMCH feature must be enabled on the System-Parameters Customer-Options form before the `MMIs` field can be changed to a number greater than zero. The algorithm for determining that a low level of MMI resources exists uses the value entered in the `MMIs` field and the number of MMI ports that are in-service in the system.

Each MMI circuit pack contains a maximum of 32 ports. If the number of in-service MMI ports falls below the minimum port capacity (value entered on the System Parameters Maintenance form under the Minimum Maintenance Threshold section and in the `MMI` field), a MMI-LEV error is logged. If this outage continues for 15 minutes, a MAJOR alarm is raised.

Resolving MMI-LEV Errors/Alarms

MMI ports are a key part of the MMCH feature, and any loss in the number of ports available for use degrades the MMCH customer-defined service level.

If a MMI circuit pack or port is busied out using the **busyout board** or **busyout port** commands, these out-of-service ports are not included in the MMI level calculation, thus allowing a technician to busy out a MMI circuit pack for maintenance reasons without causing a MAJOR alarm to be raised. However, if all of the ports on the MMI circuit pack are not made busy and the circuit pack is removed, an alarm is raised.

NOTE:
When diagnosing a MMI-LEV problem, begin by resolving any alarms raised against MMI-BD or MMI-PT maintenance objects. Clearing MMI-BD or MMI-PT alarms may clear the MMI-LEV alarm.

The MMI circuit pack is maintained by the software like the Tone Detector circuit pack, which can be removed and reinserted in any port board slot without administration. Similarly, if a MMI circuit pack is removed from service logically

by failing the Archangel sanity scan test or is removed from service physically by removing the circuit pack from the carrier, no error/alarm is raised against either the MMI-BD or the MMI-PT maintenance objects. Therefore, if a MMI-LEV error/alarm exists, yet no alarms have been raised against MMI-BD or MMI-PT maintenance objects, a MMI circuit pack may have been removed from service causing the MMI-LEV error/alarm. To resolve a MMI-LEV MAJOR alarm, restore the number of MMI ports available for service to be equal to or greater than the calculated port capacity.

To determine how many MMI circuit packs are needed for the MMCH feature:

1. Using the **display system-parameters maintenance** command, locate the number listed in the `Minimum Maintenance Thresholds` (`MMIs`) field and record this number.
2. Use the **list configuration** command to verify the number of MMI ports.
3. Compare this number with the value listed in the `MMI` field on the System-Parameters Maintenance form (number listed in step 1 a minimum thresholds number for MMI ports of between 0-128). Each MMI circuit pack contains a maximum of 32 ports. If the number in the `MMIs` field is less than or equal to 32, one MMI circuit pack is needed. If this number is 64, then two MMI circuit pack are needed.
4. Use the **list configuration** command to verify that the number of MMI circuit packs listed agrees with the required minimum port capacity (from step 1). If the number of MMI circuit packs listed in the step 2 differs from the calculated number, restore the number of MMI circuit packs to the correct value, in order to resolve the MMI-LEV alarm.

Error Log Entries and Test to Clear Values

Table 3-220. MMI-LEV Error Log Entries

Error Type	Aux Data	Associated Test	Alarm Level	On/ Off Board	Test to Clear Value
1[1]	Any	None	MAJOR	OFF	

1. The number of MMI resources in the system that are in service has fallen below the calculated minimum value. If the number of in-service MMI ports falls below the MMCH port capacity (value entered in the `Minimum Maintenance Thresholds for MMIs` field) on the System-Parameters Maintenance form, a MMI-LEV error is logged. If this outage continues for 15 minutes, a MAJOR alarm is raised.

To resolve this alarm, correct the out-of-service problem by following these procedures:

1. See "MMI-PT" and "MMI-BD" and resolve any associated alarms.

2. If a MMI-LEV error/alarm exist and none has been raised against MMI-BD or MMI-PT maintenance objects, an MMI circuit pack may have been removed from service causing the MMI-LEV error/alarm. To resolve a MMI-LEV MAJOR alarm, restore the number of MMI ports available for service to be equal to or more than the calculated port capacity. See the "Resolving MMI-LEV Errors/Alarms" section above for details.
3. If the error contines to alarm, escalate the problem.

System Technician-Demanded Tests: Descriptions and Error Code

There are no System Technician-Demanded tests for MMI-LEV.

MMI-PT

MO Name (in Alarm Log)	Alarm Level	Initial Command to Run[1]	Full Name of MO
MMI-PT	MAJOR	test port PCSSpp l r#	Multimedia Interface Port
MMI-PT	MINOR	test port PCSSpp l r#	Multimedia Interface Port
MMI-PT	WARNING	test port PCSSpp l r#	Multimedia Interface Port

1. Where P is the port network number (1 for PPN); C is the carrier designation (for example, A, B, or C); and SS is the address of the slot in the carrier where the circuit pack is located (for example, 01, 02, ..., and so forth).

NOTE:
Refer to "Troubleshooting Multimedia Call Handling (MMCH)" in Chapter 1, "Maintenance for R6csi Compact Modular Cabinets" for MMCH troubleshooting information.

The Multimedia Interface Circuit Pack provides a number of H.221 protocol terminations for bit streams received from the TDM bus. The Multimedia Interface demultiplexes the H.221 bit stream (audio, video, data, control, and indication signals) and transmits the bit streams onto the TDM bus to be processed by the appropriate circuit packs.

Each Multimedia Interface Circuit Pack contains 32 separately maintained "ports," more commonly referred to as "resources." MMI-PT represents one of these 32 resources. At system boot or when the circuit pack is inserted, 32 resources are inserted into the system.

The MMI circuit pack contains 4 Digital Signal Processors (DSPs) which manage the 32 resources. These resources are directly mapped to DSPs:

Resource	Direct Map
1-8	DSP1
9-16	DSP2
17-24	DSP3
25-32	DSP4

All 8 resources that the circuit pack controls may be placed out of service by the failure of one of these DSPs.

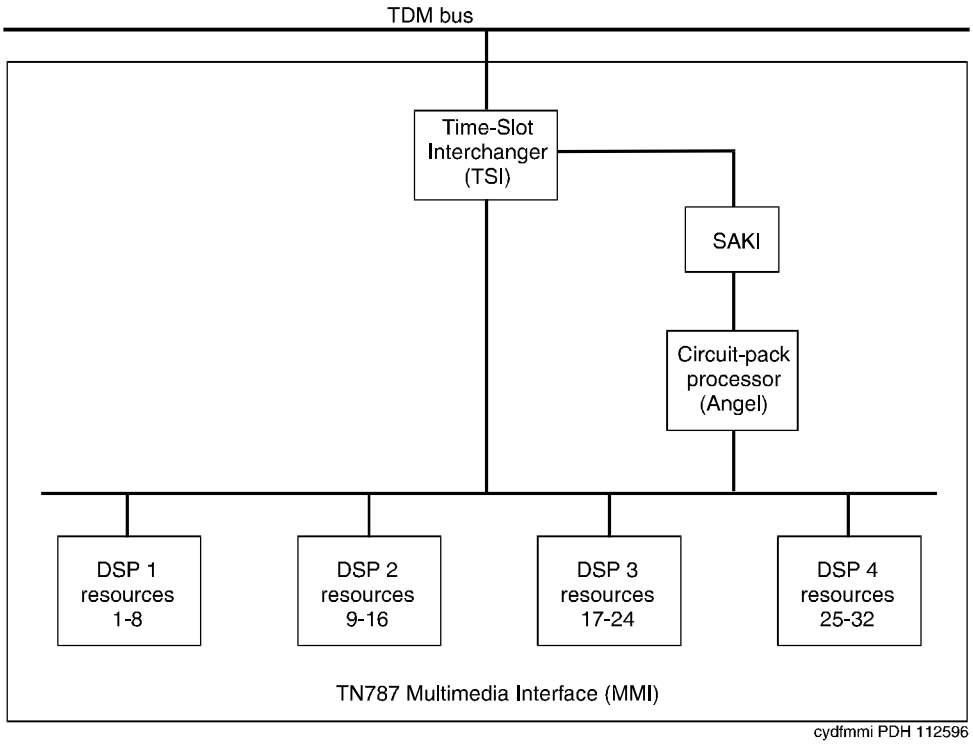

Figure 3-23. TN787 Multimedia Interface (MMI) Circuit Pack

Error Log Entries and Test to Clear Values

Table 3-221. MMI-PT Error Log Entries

Error Type	Aux Data	Associated Test	Alarm Level	On/ Off Board	Test to Clear Value
0[1]	0	Any	Any	Any	test port PCSSpp sh r 1
1 (a)	Any	Uplink error from pack			
18 (b)	0	Busyout port PCSSpp	WNG	OFF	release port PCSSpp
130 (c)	Any	Software generated	WNG	ON	
257 (d)	Any	None	MAJ/ MIN	ON	
513 (e)	Any	Resource Loopback Test (#1111)	MIN	ON	test port PCSSpp sh r 3
1025 (f)	Any	Uplink error from pack			
3841 - 3844 (g)	Any	Uplink error from pack			

1. Run the short test sequence first. If all tests pass, run the Long Test Sequence. Refer to the appropriate test description and follow the recommended procedures.

Notes:

a. The customer endpoint connected on a conference sent too many messages to the VSP-MCU in a specified amount of time. Check the “status conference” forms to correlate which customer had the problem. This is a customer endpoint problem and not a VSP-MCU problem.

b. This port has been busied out by the **busyout port PCSSpp** command.

c. Indicates that the circuit pack has been removed or has been insane for more than 11 minutes. To clear the error, replace or reseat the circuit pack.

d. This error occurs if the MMI circuit pack detects a DSP Error. Maintenance software will reset the DSP when this error is received. This error is logged for all 8 resources connected to this particular DSP. If this DSP continues to fail sanity, a Minor alarm is raised. Replace the circuit pack.

e. This error occurs when the Resource Looparound Test (#1111) fails. Run the Long Test Sequence and note the results of Test #1111.

f. This error occurs if either the MMI or Voice Conditioner (VC) circuit packs reports a loss of framing on the service channel between these two circuit packs. When a customer endpoint establishes a call to the VSP-MCU, a channel is established between the MMI resource and the VC port. If this channel is detected to go down by either circuit pack, an uplink message is sent. This error is then forwarded to maintenance for both circuit packs.

Run the Long Test Sequence for this MMI resource, and if any of the tests fail, follow the repair procedures for that test. If all tests pass, the cause of the problem might be with the VC pack. See the “VC-DSPPT” repair procedures.

g. These errors are not related to VSP-MCU. They could be caused by network problems or from the customer endpoints. They are presented here for logging purposes only:

Code	Description
3841	CRC4 Error (Frame checksum error)
3842	Correctable BAS (Control msg single or double bit error, but correctable)
3843	Uncorrectable BAS (Control msg bit error -three or more bit, uncorrectable)
3844	Protocol Error (H.221 Protocol error from endpoint detected)

System Technician-Demanded Tests: Descriptions and Error Codes

Order of Investigation	Short Test Sequence	Long Test Sequence	D/ND[1]
Resource Looparound Test (#1111)	X	X	D

1. D = Destructive; ND = Nondestructive

Resource Looparound Test (#1111)

This test is destructive.

This test checks the connectivity of the resource within MMI circuit pack and out to the TDM bus. The object is to test the circuitry that an H.221 bit stream comes in contact with when that stream is demultiplexed, pre-processed, written to the TDM bus and then reread (looped in the TSI), post-processed, multiplexed, and then written back to the TDM bus for verification. The video, audio, and data components of the bit stream are tested separately. If any one of these tests fails, then the resource is taken out of service.

Table 3-222. TEST #1111 Resource Looparound Test

Error Code	Test Result	Description/Recommendation
1000	ABORT	System resources required to run this test are not available. The port may be busy with a valid call. 1. Retry the command at 1-minute intervals a maximum of five times. 2. Use the **status conference** command to determine if there is an active conference. If a call is active, the test cannot be run until the conference call terminates.
1002	ABORT	The system could not allocate time slots for the test. The traffic load on the system may be very high or time slots may be out-of-service due to TDM-Bus errors. Refer to "TDM-BUS (TDM Bus)" to diagnose any active TDM Bus errors. 1. If the system has no TDM-BUS errors and is not handling heavy traffic, repeat the test at 1-minute intervals a maximum of five times.
1003	ABORT	The system could not allocate a tone detector for the test. The system is oversized for the number of tone detectors present or some tone detectors are out-of-service. 1. Resolve any "TTR-LEV (TTR Level)" errors in the Error Log. 2. Resolve any "TONE-PT (Tone Generator)" errors in the Error Log. 3. If neither condition exists, retry the test at 1-minute intervals a maximum of five times.
1004	ABORT	The resource has been seized by a user for a valid call. Use the **status conference** command to verify that there is a conference call active. 1. If there are no conference calls, retry the command at 1-minute intervals a maximum of five times.
2000	ABORT	Response to the test was not received from the Tone Detector circuit pack within the allowable time period. 1. If this result occurs repeatedly, reset the circuit pack, if the other ports are not in use. Reset the circuit pack by issuing the **busyout board PCSSpp** and the **reset board PCSSpp** commands, followed by the **release board PCSS** command. 2. If this result occurs again, replace the circuit pack.
2012	ABORT	Internal system error
2100	ABORT	Could not allocate the necessary resources to run this test. Abnormal abort. 1. Retry the command at 1-minute intervals a maximum of 5 times.

Continued on next page

Table 3-222. TEST #1111 Resource Looparound Test — *Continued*

Error Code	Test Result	Description/Recommendation
0, 1, 2	FAIL	This resource cannot guarantee data integrity and is out-of-service. The following error codes indicate failure of a particular media loop: 0 = video 1 = audio 2 = low-speed data 1. Replace the circuit pack
	PASS	The resource is functioning normally.

MMI-SYNC

MO Name (in Alarm Log)	Alarm Level	Initial Command to Run[1]	Full Name of MO
MMI-SYNC	MINOR	test board PCSS l r#	Multimedia Interface Circuit Pack

1. Where P is the port network number (1 for PPN); C is the carrier designation (for example, A, B, or C); and SS is the address of the slot in the carrier where the circuit pack is located (for example, 01, 02, ..., and so forth).

NOTE:
Refer to "Troubleshooting Multimedia Call Handling (MMCH)" in Chapter 5 for MMCH troubleshooting information.

Each Port Network (PN) must have a TN787D or later MMI circuit pack assigned as the Multimedia Interface (MMI) master synchronization source for that PN. If one or more MMI circuit pack is administered in a PN, one MMI circuit pack is designated as the master synchronization source for all MMI circuit packs within that PN.

The MMI circuit pack generates a synchronization signal and puts that signal on the TDM bus. Other MMI packs or any other circuit pack within a PN can listen to this signal and "synchronize up" to it. The first MMI circuit pack inserted in a PN is normally designated as the master. As subsequent MMI packs are inserted, they are instructed to listen and synchronize to the time-slot of the master MMI. In the unlikely case of an MMI losing this reference, an uplink message is sent from the MMI circuit pack that lost the signal to maintenance, which also clears the "event" counter on this MMI with a downlink message. This forces the MMI circuit pack to return the current state of the synchronization signal. If the signal is still lost, then the recovery algorithm is entered. Note that during this time, the MMI circuit pack synchronizes to its internal clock, and there should be no service disruption. A loss of synchronization is usually the result of a circuit pack failure. The maintenance strategy is to switch the master source away from the bad pack to another healthy MMI circuit pack within the PN.

A synchronization switch takes place if half or more of the MMI circuit packs in a PN report a loss of synchronization. For example, a PN with two MMIs reporting a loss of sync source switches immediately, three and four MMIs switch if two report the loss, and so forth. A healthy MMI circuit pack becomes the master synchronization source providing the signal on a new timeslot. The other MMI circuit packs within the PN are instructed to listen to this new signal, and the old master stops providing the signal and now listens to the new master MMI. If an MMI is physically removed from the system, then the remaining MMIs report the loss of synchronization. The first MMI with no alarms present becomes the new master of that PN. Once a synchronization switch has occurred, another switch is

not allowed for 15 minutes to avoid hyperactive switching. If all the MMIs have alarms, then no switch is made.

If the MMI circuit pack that provides synchronization is craft busied out, it will not affect the PN synchronization. The signal is still provided by the busied-out pack. There is no affect on synchronization if the technician issues a release of the busied-out MMI. Synchronization is not affected by a warm start of the system (reset system 1). For all other restarts (reboot through cold 2), MMI synchronization recovers during board insertion.

Error Log Entries and Test to Clear Values

Table 3-223. MMI-SYNC Error Log Entries

Error Type	Aux Data	Associated Test	Alarm Level	On/Off Board	Test to Clear Value
1	Any	None			See note [1]
257	Any	None	MINOR	OFF	See note [2]

1. An MMI synchronization switch was successful. Refer to MMI-BD errors for the reason for the switch.
2. The requested MMI synchronization switch failed. Resolve all MMI-BD alarms.

System Technician-Demanded Tests: Descriptions and Error Codes

There are no system technician-demanded tests for MMI-SYNC.

OPS-LINE (DS1 OPS Line)

MO Name (in Alarm Log)	Alarm Level	Initial Command to Run	Full Name of MO
OPS-LINE	MINOR	test station <ext> l	DS1OPS Line
OPS-LINE	WARNING	test station <ext>	DS1OPS Line

An analog Off-Premises Station (OPS) can be connected to the system through a DS1 link. A TN767 DS1 Interface circuit pack supports up to 24 DS1OPSs. Since the DS1OPS is an analog telephone set, a channel multiplexer is necessary as the remote DS1 endpoint that converts the digital signal of a DS1 port to the OPS Line and vice versa. See Figure 3-24 for details.

The DS1OPS Line Maintenance provides a strategy to maintain an OPS Line via a port of the DS1 Interface circuit pack. The strategy covers initialization tests, periodic tests, system technician-demanded tests, and alarm resolution and escalation. Two service states are specified in a DS1OPS Line maintenance. They are: *out-of-service* in which the line is in a deactivated state and cannot be used for either incoming or outgoing calls; *in-service* in which the line is in an activated state and can be used for both incoming and outgoing calls. If the DS1 Interface circuit pack is out-of-service, then all lines on the DS1 Interface circuit pack are put into the out-of-service state, and a Warning alarm is raised.

For maintenance of the remote DS1 endpoint (for example, Channel Division Multiplexer, D4 Channel Bank), refer to the maintenance documentation from its vendor for details.

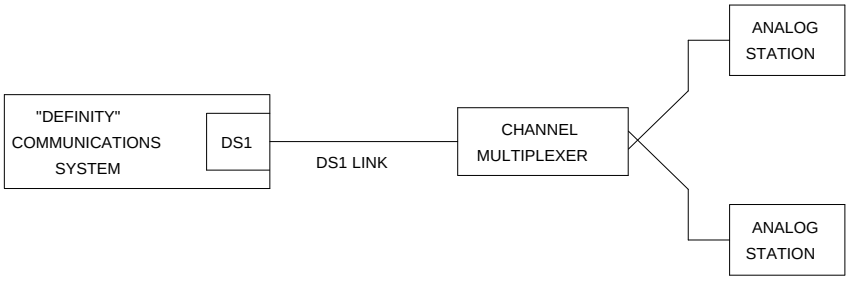

Figure 3-24. DS1 OPS Line Interactions

Hardware Error Log Entries and Test to Clear Values

Table 3-224. DS1 OPS Maintenance Error Log Entries

Error Type	Aux Data	Associated Test	Alarm Level	On/Off Board	Test to Clear Value
0[1]	0	Any	Any	Any	test station <ext> sh r 1
15 (a)	Any	Audit and Update Test (#36)			
18 (b)	0	busyout station <ext>	WARNING	OFF	release station <ext>
130 (c)		None	WARNING	ON	test station <ext>
1281		Conference Circuit Test (#7)	MINOR	ON	test station <ext> l
1537		NPE Crosstalk Test (#6)	MINOR	ON	test station <ext> l
1793 (d)					test circuit pack PCSS l

1. Run the Short Test Sequence first. If all tests pass, run the Long Test Sequence. Refer to the appropriate test description and follow the recommended procedures.

Notes:

a. This is a software audit error that does not indicate any hardware malfunction. Run the Short Test Sequence and investigate associated errors (if any).

b. The DS1OPS Line has been busied out by a **busyout station <ext>** command. No calls can be made on this line.

c. This error type indicates that the circuit pack has been removed or has been insane for more than 11 minutes. To clear the error, reinsert or replace the circuit pack.

d. Error Type 1793 indicates a problem with the DS1 Interface circuit pack. Since there is no error against the OPS-LINE port, no alarm is raised against the OPS-LINE port. However, there should be errors logged against the DS1 Interface circuit pack. Look for DS1-BD errors in the Hardware Error Log and follow procedures provided in the DS1-BD (DS1 Interface Circuit Pack) Maintenance documentation.

System Technician-Demanded Tests: Descriptions and Error Codes

Always investigate tests in the order presented in the table below when inspecting errors in the system. By clearing error codes associated with the *NPE Crosstalk Test,* for example, you may also clear errors generated from other tests in the testing sequence.

Order of Investigation	Short Test Sequence	Long Test Sequence	D/ND[1]
NPE Crosstalk Test (#6)		X	ND
Conference Circuit Test (#7)		X	ND
DS1OPS Switchhook Inquiry Test (#312)	X	X	ND
Audit and Update Test (#36)	X	X	ND

1. D = Destructive; ND = Nondestructive

NPE Crosstalk Test (#6)

One or more NPEs reside on each circuit pack with a TDM Bus interface. The NPE controls port connectivity and gain, and provides conferencing functions on a per-port basis The NPE Crosstalk Test verifies that this port's NPE channel talks on the selected time slot and never crosses over to time slots reserved for other connections. If the NPE is not working correctly, one-way and noisy connections may be observed. This test is usually only part of a port's Long Test Sequence and takes about 20 to 30 seconds to complete.

Table 3-225. TEST #6 NPE Crosstalk Test

Error Code	Test Result	Description/ Recommendation
	ABORT	Could not allocate system resources to run this test or an internal system error (software) occurred. 1. Retry the command at 1-minute intervals a maximum of 5 times.
1000	ABORT	System resources required to run this test are not available. The port may be in use on a valid call. Use **status station** or **status trunk** command to determine when the port is available for testing. 1. Retry the command at 1-minute intervals a maximum of 5 times.
1001	ABORT	Could not allocate the necessary system resources to run this test. 1. Retry the command at 1-minute intervals a maximum of 5 times.

Continued on next page

Table 3-225. TEST #6 NPE Crosstalk Test — *Continued*

Error Code	Test Result	Description/ Recommendation
1002	ABORT	The system could not allocate time slots for the test. The system may be under heavy traffic conditions or it may have time slots out-of-service due to TDM-BUS errors. Refer to TDM-BUS (TDM Bus) Maintenance documentation to diagnose any active TDM-BUS errors. 1. If the system has no TDM-BUS errors and is not handling heavy traffic, repeat the test at 1-minute intervals a maximum of 5 times.
1003	ABORT	The system could not allocate a tone receiver for the test. The system may be oversized for the number of Tone Detectors present or some Tone Detectors may be out-of-service. 1. Look for TTR-LEV errors in the Error Log. If present, refer to TTR-LEV (TTR Level) Maintenance documentation. 2. Look for TONE-PT errors in the Error Log. If present, refer to TONE-PT (Tone Generator) Maintenance documentation. 3. If neither condition exists, retry the test at 1-minute intervals a maximum of 5 times.
1004	ABORT	The test was aborted because the port was seized by a user for a valid call. Use **status station** command to determine the service state of the port. If the service state indicates that the port is in use, then the port is unavailable for certain tests. You must wait until the port is idle before retesting. 1. Retry the command at 1-minute intervals a maximum of 5 times.
1020	ABORT	The test did not run due to an an already existing error on the specific port or due to a more general error on the circuit pack. 1. Examine the error log for existing errors against this port or the circuit pack and attempt to diagnose the already existing error. (Error code 1793 indicates a problem with the DS1 interface board, and any problems on the associated DS1-BD or UDS1-BD should be resolved first.)
2000	ABORT	Response to the test request was not received within the allowable time period. 1. Retry the command at 1-minute intervals a maximum of 5 times. 2. If the test aborts with error code 2000 again, run short test sequence on the associated DS1-BD or UDS1-BD. If tests 138 through 145 on the associated DS1-BD or UDS1-BD are also aborting with error code 2000, hyperactivity on the board or facility is indicated. In this case, the hyperactivity problem should be dealt with first.
2100	ABORT	System resources required for this test are not available. 1. Retry the command at 1-minute intervals a maximum of 5 times.

Continued on next page

Table 3-225. TEST #6 NPE Crosstalk Test — *Continued*

Error Code	Test Result	Description/ Recommendation
Any	FAIL	The test failed. This can be due to on-board or off-board problems. Off-board problems of concern include EXP-INTF faults, TDM-BUS faults, and faults associated with the tone detectors/tone generators. Clear all off-board problems before replacing the board. Keep in mind that a TDM-BUS problem is usually the result of a faulty board connected to the backplane or bent pins on the backplane. 1. Look for TONE-BD and/or TONE-PT errors in the error log. If present, refer to the TONE-BD Maintenance documentation and to the TONE-PT Maintenance documentation. 2. Retest when the faults from step 1 are cleared.
	PASS	The port is correctly using its allocated time slots. User-reported troubles on this port should be investigated using other port tests and by examining station, trunk, or external wiring.
0	NO BOARD	The test could not relate the internal ID to the port (no board). This could be due to incorrect translations, no board is inserted, an incorrect board is inserted, or an insane board is inserted. 1. Check to ensure that the board translations are correct. Use the **list config** command, and resolve any problems that are found. 2. If the board was found to be correctly inserted in step 1, issue the **busyout board** command. 3. Issue the **reset board** command. 4. Issue the **release busy board** command. 5. Issue the **test board long** command. This should re-establish the linkage between the internal ID and the port. If this is not the case, dispatch to check to ensure that there is a valid board inserted.

Conference Circuit Test (#7)

One or more NPEs reside on each circuit pack with a TDM Bus interface. The NPE controls port connectivity and gain, and provides conferencing functions on a per-port basis. The Conference Circuit Test verifies that the NPE channel for the port being tested can correctly perform the conferencing function. The NPE is instructed to listen to several different tones and conference the tones together. The resulting signal is then measured by a Tone Detector port. If the level of the tone is within a certain range, the test passes.

Table 3-226. TEST #7 Conference Circuit Test

Error Code	Test Result	Description/ Recommendation
	ABORT	System resources required for this test are not available. 1. Retry the command at 1-minute intervals a maximum of 5 times.
1000	ABORT	System resources required to run this test are not available. The port may be in use on a valid call. Use the **status station** or **status trunk** command to determine when the port is available for testing. 1. Retry the command at 1-minute intervals a maximum of 5 times.
1002	ABORT	The test was aborted because the system could not allocate time slots for the test. The system might be under heavy traffic conditions, or it might have time slots out of service due to TDM-BUS errors. (The **status health** command may be used to determine whether the system is experiencing heavy traffic.) Refer to the TDM-BUS (TDM bus) Maintenance documentation to diagnose any active TDM-BUS errors. 1. If the system has no TDM-BUS errors, is not handling heavy traffic, and the port status is idle, retry the command at 1-minute intervals for a maximum of 5 times.
1003	ABORT	The system could not allocate a tone receiver for the test. The system may be oversized for the number of tone detectors present or some of the tone detectors may be out of service. Issue the **list measurements tone-receiver** command to display basic information about the system's tone receivers. 1. Look for TTR-LEV errors in the error log. If present, refer to the TTR-LEV Maintenance documentation. 2. Look for TONE-PT errors in the error log. If present, refer to the TONE-PT Maintenance documentation. 3. If neither condition exists, retry the test at 1-minute intervals for a maximum of 5 times.
1004	ABORT	The port has been seized by a user for a valid call. Use **status station** or **status trunk** command to determine when the port is available for testing. 1. Retry the command at 1-minute intervals a maximum of 5 times.
1018	ABORT	The test was disabled via translation. 1. You may want to determine why the test has been disabled before you enable it. 2. To enable the test for the particular analog station being tested, enter the **change station extension** command, and then change the `Test` field on the Station form to **y**.

Continued on next page

Table 3-226. TEST #7 Conference Circuit Test — *Continued*

Error Code	Test Result	Description/ Recommendation
1020	ABORT	The test did not run due to an already existing error on the specific port or due to a more general error on the circuit pack. 1. Examine the error log for existing errors against this port or the circuit pack and attempt to diagnose the already existing error. (Error code 1793 indicates a problem with the DS1 interface board, and any problems on the associated DS1-BD or UDS1-BD should be resolved first.)
2000	ABORT	The test was aborted because response to the test was not received within the allowable time period. 1. Retry the command at 1-minute intervals for a maximum of 5 times. 2. If the test aborts with error code 2000 again, run short test sequence on the associated DS1-BD or UDS1-BD. If tests 138 through 145 on the associated DS1-BD or UDS1-BD are also aborting with error code 2000, hyperactivity on the board or facility is indicated. In this case, the hyperactivity problem should be dealt with first.
2100	ABORT	System resources required for this test are not available. 1. Retry the command at 1-minute intervals a maximum of 5 times.
	FAIL	The NPE of the tested port did not conference the tones correctly. This can cause noisy and unreliable connections. 1. Enter the **list configuration board PCSS** command. If the circuit pack is a TN767B vintage 8 or 9, replace the circuit pack with a TN767C V3 or later. The error log may have error type 1281 entries. 2. Test all administered trunks on the board. If one fails, this could be an off-board problem (such as an incoming seizure or an off-hook port seizure during the test). Retest the board. 3. If all of the ports fail, check the CARR-POW (see note below). 4. If several ports fail, check the error log for TONE-BD or TONE-PT errors. If there are such errors, take the appropriate action. When the TONE errors have cleared, rerun the test. 5. If the retry passes and troubles have been reported, coordinate isolation with the far-end PBX. Make sure that the near-end and far-end switches and any NTCE equipment (the CSUs) have the correct administration. 6. Replace the circuit pack. **NOTE:** If the conference circuit test fails for all ports on a circuit pack, a -5 volt power problem is indicated.

Continued on next page

Table 3-226. TEST #7 Conference Circuit Test — *Continued*

Error Code	Test Result	Description/ Recommendation
	PASS	The port can correctly conference multiple connections. User-reported troubles on this port should be investigated using other port tests and by examining station, trunk, or external wiring.
0	NO BOARD	The test could not relate the internal ID to the port (no board). This could be due to incorrect translations, no board is inserted, an incorrect board is inserted, or an insane board is inserted. 1. Check to ensure that the board translations are correct. Use the **list config** command, and resolve any problems that are found. 2. If the board was found to be correctly inserted in step 1, issue the **busyout board** command. 3. Issue the **reset board** command. 4. Issue the **release busy board** command. 5. Issue the **test board long** command. This should re-establish the linkage between the internal ID and the port. If this is not the case, dispatch to check to ensure that there is a valid board inserted.

Audit and Update Test (#36)

This test sends port level translation data from switch processor to the DS1 Interface circuit pack to assure that the trunk's translation is correct. Translation updates include the following data: trunk type (in/out), dial type, timing parameters, and signaling bits enabled. The port audit operation verifies the consistency of the current state of the trunk as kept in the DS1 Interface circuit pack and in the switch software.

Table 3-227. TEST #36 Audit and Update Test

Error Code	Test Result	Description/ Recommendation
	ABORT	Internal System Error. 1. Retry the command at 1-minute intervals a maximum of 5 times.

Continued on next page

Table 3-227. TEST #36 Audit and Update Test — *Continued*

Error Code	Test Result	Description/ Recommendation
1000	ABORT	The test was aborted because system resources required to run this test were not available. The port may be busy with a valid call. Use the **display port PCSSpp** command to determine the station extension of the port. Use the **status station** command to determine the service state of the port. If the service state indicates that the port is in use, then the port is unavailable for certain tests. You must wait until the port is idle before retesting. 1. If the port is idle, retry the command at 1-minute intervals a maximum of 5 times.
1006	ABORT	The test was aborted because the station is out of service. This condition may be accompanied by an error type 18 entry in the error log. You may want to determine why the station was taken out of service. (When stations are taken out of service by maintenance software, the problems that preceded that point must be cleared.) 1. Use the **status station** command to check the service state of the port. If the port is indeed out of service, enter the **release station** command to bring the station back into service. 2. Retry the command at 1-minute intervals a maximum of 5 times. 3. If the test continues to abort, and the service state indicates that the station is in service and idle, escalate the problem.
2000	ABORT	The test was aborted because response to the test was not received within the allowable time period. 1. Retry the command at 1-minute intervals for a maximum of 5 times. 2. If the test aborts with error code 2000 again, run short test sequence on the associated DS1-BD or UDS1-BD. If tests 138 through 145 on the associated DS1-BD or UDS1-BD are also aborting with error code 2000, hyperactivity on the board or facility is indicated. In this case, the hyperactivity problem should be dealt with first.
2100	ABORT	System resources required for this test are not available. 1. Retry the command at 1-minute intervals a maximum of 5 times.
7 or 8	FAIL	Test failed due to internal system error. Do not replace port board. ■ Error code 7: the failure occurred during station translation download (to DS1 Interface circuit pack). ■ Error code 8: the failure occurred during station ringer update. 1. Retry the command at 1-minute intervals a maximum of 5 times.

Continued on next page

Table 3-227. TEST #36 Audit and Update Test — *Continued*

Error Code	Test Result	Description/ Recommendation
	PASS	Trunk translation has been updated successfully. The current trunk states kept in the DS1 Interface circuit pack and switch software are consistent.
0	NO BOARD	The test could not relate the internal ID to the port (no board). This could be due to incorrect translations, no board is inserted, an incorrect board is inserted, or an insane board is inserted. 1. Check to ensure that the board translations are correct. Use the **list config** command, and resolve any problems that are found. 2. If the board was found to be correctly inserted in step 1, issue the **busyout board** command. 3. Issue the **reset board** command. 4. Issue the **release busy board** command. 5. Issue the **test board long** command. This should re-establish the linkage between the internal ID and the port. If this is not the case, dispatch to check to ensure that there is a valid board inserted.

DS1 OPS Switchhook Inquiry Test (#312)

This test initiates the Switchhook Audit Test. The test queries the switchhook state of the Off-Premises-Station in switch software. If the state in switch software disagrees with the state on the DS1 Interface circuit pack. The state in the switch software is updated to match the state on the DS1 Interface circuit pack.

Table 3-228. TEST #312 DS1OPS Switchhook Inquiry Test

Error Code	Test Result	Description/ Recommendation
	ABORT	Internal System Error. 1. Retry the command at 1-minute intervals a maximum of 5 times.
1004	ABORT	The port has been seized by a user for a valid call. Use the **status station** command to determine when the port is available for testing. 1. Retry the command at 1-minute intervals a maximum of 5 times.

Continued on next page

Table 3-228. TEST #312 DS1OPS Switchhook Inquiry Test — *Continued*

Error Code	Test Result	Description/ Recommendation
1005	ABORT	Test failed due to incompatible configuration administered in station administration. 1. Verify the station administration is the station assigned to Port 24 of the DS1 Interface circuit pack while common channel signaling is specified.
1006	ABORT	The test was aborted because the station is out of service. This condition may be accompanied by an error type 18 entry in the error log. You may want to determine why the station was taken out of service. (When stations are taken out of service by maintenance software, the problems that led up to that must be cleared.) 1. Use the **status station** command to check the state of the port. If the port is indeed out of service, enter the **release station** command to bring the station back into service. 2. Retry the command at 1-minute intervals a maximum of 5 times. 3. If the test continues to abort, and the station is in the in-service/idle state, escalate the problem.
1020	ABORT	The DS1 Interface circuit pack is out-of-service. 1. Look for DS1-BD errors in Hardware Error Log. If present, refer to the DS1-BD (DS1 Interface Circuit Pack) Maintenance documentation. 2. Retry the command.
2000	ABORT	The test was aborted because response to the test was not received within the allowable time period. 1. Retry the command at 1-minute intervals for a maximum of 5 times. 2. If the test aborts with error code 2000 again, run short test sequence on the associated DS1-BD or UDS1-BD. If tests 138 through 145 on the associated DS1-BD or UDS1-BD are also aborting with error code 2000, hyperactivity on the board or facility is indicated. In this case, the hyperactivity problem should be dealt with first.
2012	ABORT	The test was aborted due to a system error.
2100	ABORT	Could not allocate the necessary system resources to run this test. 1. Retry the command at 1-minute intervals for a maximum of 5 times.
1	FAIL	Internal System Error. 1. Look for DS1-BD errors in the Hardware Error Log. If present, refer to the DS1-BD (DS1 Interface Circuit Pack) Maintenance documentation. 2. If a channel multiplexer is used as the remote DS1 endpoint to which the station connects, refer to the multiplexer vendor's maintenance document for diagnosis. 3. Retry the command at 1-minute intervals a maximum of 5 times

Continued on next page

Table 3-228. TEST #312 DS1OPS Switchhook Inquiry Test — *Continued*

Error Code	Test Result	Description/ Recommendation
	PASS	The station hook states in both switch software and DS1 Interface circuit pack are consistent.
0 2012	NO BOARD	The test could not relate the internal ID to the port (no board). This could be due to incorrect translations, no board is inserted, an incorrect board is inserted, or an insane board is inserted. 1. Check to ensure that the board translations are correct. Use the **list config** command, and resolve any problems that are found. 2. If the board was found to be correctly inserted in step 1, issue the **busyout board** command. 3. Issue the **reset board** command. 4. Issue the **release busy board** command. 5. Issue the **test board long** command. This should re-establish the linkage between the internal ID and the port. If this is not the case, dispatch to check to ensure that there is a valid board inserted.

PE-BCHL (PRI Endpoint Port)

MO Name (in Alarm Log)	Alarm Level	Initial Command to Run	Full Name of MO
PE-BCHL[1]	MINOR	test port PCSSpp l	PRI Endpoint Port
PE-BCHL	WARNING	test port PCSSpp sh	PRI Endpoint Port

1. For additional repair information, see also UDS1-BD (UDS1 Interface Circuit Pack) maintenance documentation and "Troubleshooting PRI Endpoint Problems" in Chapter 1, "Maintenance for R6csi Compact Modular Cabinets".

A PRI Endpoint provides ISDN-PRI (Primary Rate Interface) connections for customers with application equipment or terminal adapters that terminate ISDN-PRI. The equipment or terminal adapters are connected to the switch via the UDS1 interface circuit pack. PRI Endpoint Port (PE-BCHL) maintenance provides a strategy to maintain PRI Endpoint Port hardware circuitry on the UDS1 circuit pack. The maintenance strategy involves logging PRI Endpoint Port hardware errors, running tests for port initialization, periodic and scheduled maintenance, system technician-demanded tests, and alarm escalation and resolution.

Wideband Switching

The Wideband Switching capability supports end-to-end connectivity between customer endpoints at data rates from 128 to 1536 kbps over T1 facilities and to 1984 kbps over E1 facilities. DEFINITY switching capabilities are extended to support wideband calls comprised of multiple DS0s that are switched end-to-end as a single entity.

The Wideband Switching capability is designed for ISDN application equipment (for example, ISDN video codecs), but it retains provisions for non-ISDN application equipment by using PRI terminal adapters. In the same sense that a DEFINITY data module acts as a DCP or BRI terminal adapter between endpoint data (for example, V.35) and dialing (for example, RS-366) interfaces and a DCP interface, a PRI terminal adapter acts as a wideband terminal adapter between endpoint data and dialing interfaces and DEFINITY's line-side ISDN PRI interface.

The Wideband Switching Capability introduces PRI Endpoints on DEFINITY line-side interfaces. A PRI Endpoint consists of one or more contiguous B-channels on a line-side T1 or E1 ISDN PRI facility, and it has an extension number. Endpoints initiate and receive calls using ISDN SETUP messages that indicate the data rate and specific B-channels to be used, and they communicate all other call status information via standard ISDN messages. Any

DEFINITY ISDN signaling set (for example, AT&T, CCITT, ECMA) may be used for a line-side ISDNPRI facility.

Multiple PRI Endpoints on a one line-side facility are separate and distinct within the facility. Non-overlapping contiguous sets of B-channels are associated with each PRI Endpoint, and the endpoint equipment is expected to initiate calls within these boundaries.

The endpoint application equipment must be able to do the following: use standard ISDN-PRI signaling, adhere to the PRI Endpoint boundaries as administered on DEFINITY when initiating calls, and handle incoming calls appropriately based on the PRI Endpoint.

Signaling and B-channel States

These ports use a separate channel for signaling (for example, for call setup). This mode of operation is known as out-of-band signaling. The separate signaling channel is called a D-channel in ISDN terminology, and it carries all the call control signaling messages for the PRI Endpoint Port B-channels. The D-channel for these B-channels is an ISDN-PRI Signaling Link Port (ISDN-LNK). The signaling protocol used on the ISDN-PRI Signaling Link Port D-channel is defined by one of the four selectable ISDN-PRI Specifications: AT&T, CCITT, ECMA, and ANSI.

The ISDN-PRI Specification defines the possible SERVICE STATES for a B-channel. The service state is negotiated with the far-end terminal adapter, and it changes over time. Also, the service state may have a far-end or near-end component, and it is initialized to the Out-Of-Service/Far-End state. An attempt is made to negotiate the service state to In-Service.

NOTE:
The service state of a particular PRI Endpoint Port B-channel can be displayed by issuing the **status pri-endpoint <extension>** system technician command.

If a call is present, the ISDN-PRI Specification defines the permissible CALL STATES as well. There are tests in the short and long test sequences for PRI Endpoint Port that are designed to audit these states and to ensure agreement between both ends of the PRI wideband connection.

Alarming Based on Service States:

A PRI Endpoint Port B-channel is alarmed with a WARNING if it is placed into a Maintenance/Far-End or Out-Of-Service/Far-End state. While in such a state, the port is unusable for calls to the terminal adapter. However, the user can still use the other remaining ports in the PRI Endpoint to make calls to and from the terminal adapter. When a WARNING alarm is raised, the **status pri-endpoint <extension>** command should be used to determine the exact state of the port.

Other alarms can be diagnosed by using the short and/or long test sequences. Note that a PRI Endpoint Port B-channel can be placed into a Far-End Service State either by direct action of the far-end terminal adapter or by inaction of the far-end terminal adapter. For example, if they do not respond to a Remote Layer 3 Query (see Test #260 for ISDN-PRI Signaling Link Port), the associated PRI Endpoint Port B-channels are placed into the Maintenance/Far-End service state.

A PRI Endpoint Port is a port on a UDS1 interface circuit pack. Therefore, this port depends on the health of the UDS1 interface circuit pack for proper operation (see Figure 3-25). As noted earlier, a PRI Endpoint Port B-channel also depends on an ISDN-PRI Signaling Link Port D-channel (ISDN-LNK) to carry the signaling traffic. If there is a problem with the ISDN-PRI Signaling Link Port, the PRI Endpoint Port is affected. The ISDN-PRI Signaling Link Port, in turn, depends on the PKT-INT (Packet Interface).

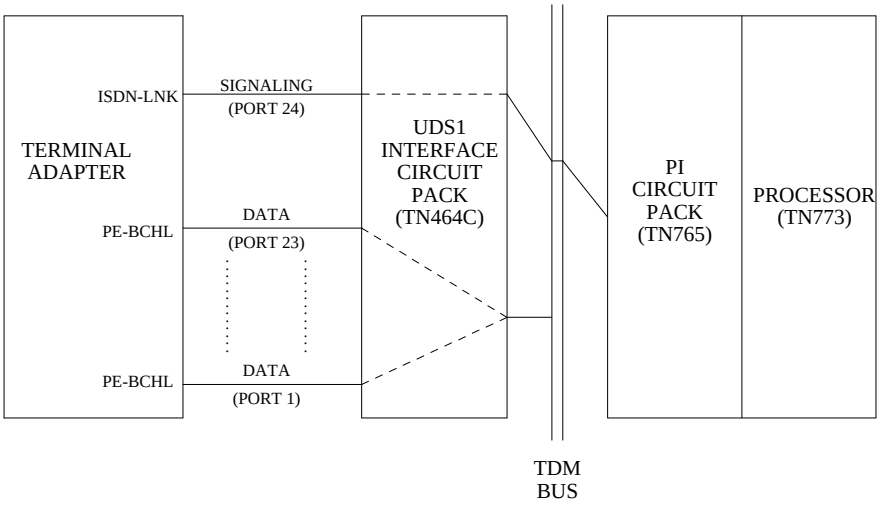

Figure 3-25. PRI Endpoint Port Interactions [INTEL]

PRI Endpoint Port Service States

This section defines the possible service states of a PRI Endpoint Port, and it explains the reason for each service state. This section also provides the recommended recovery procedures (when required).

Service States

- In-Service (INS)

  The B-channel is in its normal operating state.

- Out-of-Service/Far-end (OOS/FE)

  A B-channel is initialized to this state when administered. The switch sends messages to the far-end terminal adapter to negotiate the B-channel into service. If the far-end terminal adapter does not respond to the messages within a certain time period, the service state remains out-of-service, and maintenance periodically resends the messages. The port is unusable for calls incoming to the switch and outgoing to the terminal adapter (although other ports in the PRI Endpoint can still be used for incoming and outgoing calls).

- Out-of-Service/Near-end (OOS/NE)

  This is the state of the port whenever one of the following is true: a hardware failure exists on the signaling link, the NPE Crosstalk Test fails, or the port is busied out by system technician. In this state, the port is unusable for calls incoming to the switch or outgoing to the terminal adapter (although other ports in the PRI Endpoint can still be used for incoming and outgoing calls). No messages are sent to the far-end terminal adapter until the signaling link comes back into service or until the port is released by system technician.

- Maintenance/Far-end (MTC/FE)

  This state is reached when the far-end terminal adapter does not respond to messages sent over the signaling link for a particular port after a certain amount of time. This state is different from OOS/FE inasmuch as the signaling link must be up initially and the B-channels must be in-service. The switch periodically sends messages to the far-end terminal adapter in an attempt to negotiate the port (B-channel) into service. The port is unusable for calls outgoing to the terminal adapter. However, the port services incoming call requests from the far-end (although other ports of the PRI Endpoint can still be used to answer calls incoming to the switch or to place outgoing calls to the terminal adapter). Note that transitions into MTC/FE do not drop stable calls. Therefore, if the service state changes from in-service to MTC/FE, stable calls are unaffected.

- Maintenance/Near-end (MTC/NE)

  The port (B-channel) is in this state if the signaling link (PKT-INT) is busied out by system technician. The port (B-channel) is also temporarily in this state if the system technician has issued a **test port PCSSpp l** or a **test pri-endpoint <extension> l** command. Note that transitions into MTC/NE do not drop stable calls. Therefore, a system technician-demanded **busyout link lnk-no** command does not drop stable wideband calls. In this state, the B-channel is not usable either for new calls incoming to the switch or for new calls outgoing to the terminal adapter.

- Pending States (PEND)

  If the near-end is expecting a timed response from the far-end for a request to change the service state of a port, the state of the port reflects a Pending state. For example, if the port is out-of-service/far-end and if an in-service message is sent to the far-end, the service state of the port is

OOS/FE-PEND/INS (that is, out-of-service/far-end-Pending/in-service). The far-end has a certain amount of time to respond to the message. The service state reflects this pending state until the timer expires.

The following diagram of the PRI Endpoint Port service states shows the common progression from one service state to another and the event that caused the change of state.

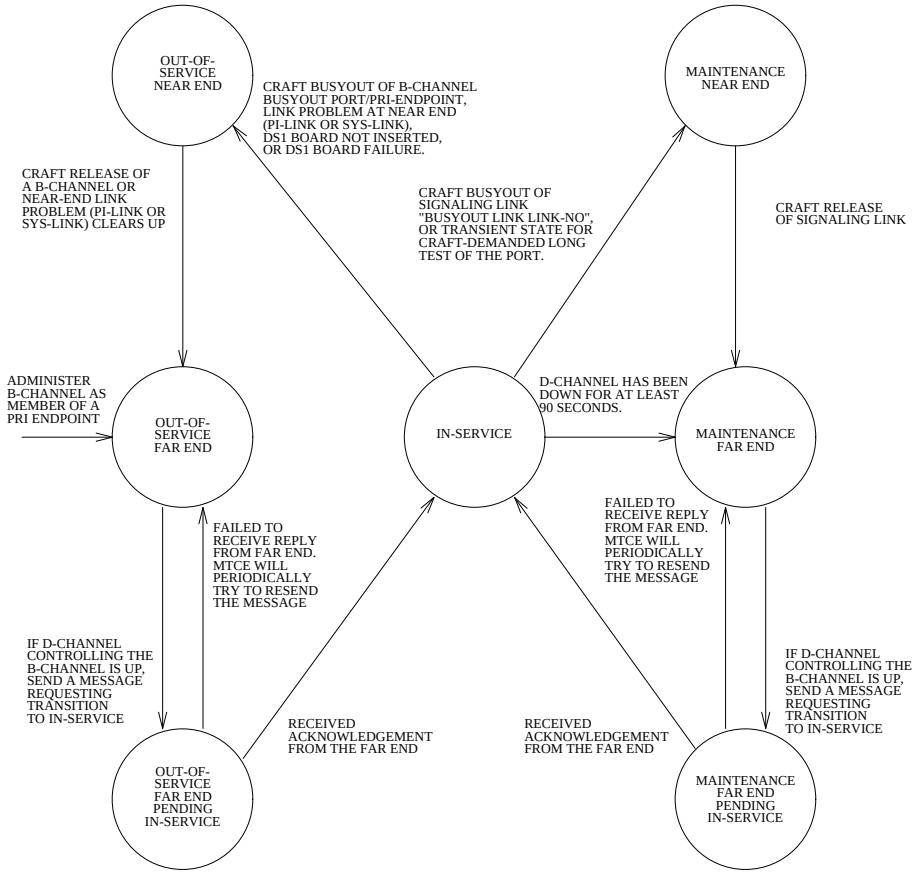

Figure 3-26. Common Progressions in Service States

PRI Endpoint Port Service States

The following table summarizes each of the different PRI Endpoint Port service states that can result when the **status pri-endpoint <extension>** command is issued. From the results of the status command, match the service state to the corresponding column. Proceed down the column until an "X" is found. The left

column indicates possible reasons why the port is in this state, and the right column suggests possible recovery mechanisms. If an alarm against PE-BCHL is present, it is indicated below the "X."

NOTE:
Refer to "Troubleshooting PRI Endpoint Problems" in Chapter 1, "Maintenance for R6csi Compact Modular Cabinets" for a layered approach to the processing of PRI Endpoint problems.

Table 3-229. PRI Endpoint Port Service States

Possible Problem Source	O/S-NE	O/S-FE	O/S- FE Pend- ins	maint-NE	maint- FE	maint-FE Pend- ins	INS	Possible Recovery Route
ISDN wideband calls being completed.							X	Normal Operation.
Port busied out by system technician?	X Warn Alarm							Release port by the **release pri-endpoint extension** or **release port PCSSpp**.
NPE Crosstalk Test failed?	X Minor Alarm							Replace UDS1 Interface CP.
DS1 circuit pack lost signal?	X							UDS1 Interface CP removed? DS1 cable disconnected? Terminal adapter problems? Far-end terminal adapter restarting? Faulty UDS1 Interface CP?
Check UDS1-BD.								Refer to UDS1-BD for repair procedures.

Continued on next page

Table 3-229. PRI Endpoint Port Service States — *Continued*

Possible Problem Source	O/S-NE	O/S-FE	O/S-FE Pend-ins	maint-NE	maint-FE	maint-FE Pend-ins	INS	Possible Recovery Route
Far-end problems?		X Warn Alarm						Check administration and the status of the corresponding port on the far-end terminal adapter.
Service Message sent, waiting for reply from far-end terminal adapter (2 minutes).			X			X		Wait a couple minutes until Pending State not present, check service state.
Processor Interface Link busied out by system technician? Check link status. [MIPS only].				X				Release link by the **release link lnk-no.**

Continued on next page

Table 3-229. PRI Endpoint Port Service States — ***Continued***

Possible Problem Source	O/S-NE	O/S-FE	O/S-FE Pend-ins	maint-NE	maint-FE	maint-FE Pend-ins	INS	Possible Recovery Route
Signaling link has been down for over 90 seconds?					X Warn Alarm			See ISDN-SGRP, ISDN-LNK, PKT-INT and/or SYS-LINK and follow repair procedures. Is far-end terminal adapter currently restarting?
Repeated failure of far-end to respond to messaging?					X Warn Alarm			Periodically Maintenance will try to resend messages. To speed process, run system technician-demanded test **test port PCSSpp** (Test #256).
Far-end port busied out (OOS/FE). Far-end port being tested (MTCE/FE).		X Warn Alarm			X Warn Alarm			Check status of far-end terminal adapter.

Error Log Entries and Test to Clear Values

Table 3-230. PRI Endpoint Port Error Log Entries

Error Type	Aux Data	Associated Test	Alarm Level	On/Off Board	Test to Clear Value
0[1]	0	Any	Any	Any	test port PCSSpp sh r 1
1 (a)	Any	None			test port PCSSpp sh r 1
15 (b)	Any	Audit and Update Test (#36)			
18 (c)	0	busyout pri-endpoint <extension> busyout port <PCSSpp>	WARNING	OFF	release pri-endpoint <extension> release port <PCSSpp>
129 (d)		None	WARNING	OFF	test port PCSSpp sh r 1
130 (e)		None	WARNING	ON	test port PCSSpp sh
257 (f)	Any	None			test port PCSSpp sh r 1
513 (g)	Any	None	WARNING	OFF	test port PCSSpp sh r 1
76 9 (f)	Any	None			test port PCSSpp sh r 1
1281 (h)	Any	Conference Circuit Test (#7)	MINOR	ON	test port PCSSpp l r 4
1537 (i)	Any	NPE Crosstalk Test (#6)	MINOR	ON	test port PCSSpp l r 3
1793 (j)	Any	None			test port PCSSpp sh r 1
3073 (k)	Any	Service State Audit (#256)			test port PCSSpp sh r 2
3585 (l)	Any	None			None

1. Run the Short Test Sequence first. If all tests pass, run the Long Test Sequence. Refer to the appropriate test description and follow the recommended procedures.

Notes:

a. This error type indicates a disagreement between the switch and the terminal adapter at the other end of the connection with regard to the ISDN *call* state of the PRI Endpoint Port. This switch automatically tries to recover by clearing the call (that is, the call is torn down). The **status pri-endpoint <extension>** command can be used to determine the state of the port.

When running the Short Test Sequence of tests, pay close attention to the results of the Call State Audit Test (#257).

b. This is a software audit error that does not indicate any hardware malfunction. Run the Short Test Sequence and investigate the associated errors (if any).

c. The PRI Endpoint Port has been busied out by a **busyout pri-endpoint <extension>** command or by a **busyout port <PCSSpp>** command. No wideband calls can be made to this port (although wideband calls can still be made to other ports within this PRI Endpoint if others ports are in service).

d. The far-end terminal adapter changed its ISDN *service* state to either "out-of-service" or "maintenance." This may be a temporary condition due to the testing of this port by the far-end terminal adapter *or* by a hardware problem with the port. Outgoing calls to the terminal adapter are not allowed over the port (although calls can still be made to other ports that are in service within the same PRI Endpoint). To investigate the status of the port, issue the **status pri-endpoint <extension>** command.

e. This error type indicates that the circuit pack has been removed or has been insane for more than 11 minutes. To clear the error, reinsert or replace the circuit pack.

f. This error type indicates a disagreement between this switch and the terminal adapter at the other end of the connection with regard to the ISDN service state of the PRI Endpoint Port. This switch tries to recover by performing a service state audit. The **status pri-endpoint <extension>** command can be used to determine the state of the port.

   When running the Short Test Sequence, pay close attention to the results of the Service State Audit Test (#256).

g. This port is not recognized by the far-end terminal adapter. Investigate the PRI Endpoint administration for both the switch and the terminal adapter and make changes as necessary.

h. The Conference Circuit Test (#7) failed on this port. See Test #7 for the repair procedures.

i. The NPE Crosstalk Test (#6) failed on this port. See Test #6 for the repair procedures.

j. This error indicates a failure of the UDS1 Interface circuit pack. When running the Short Test Sequence, the results of the Signaling Link State Check Test (#255) are important.

k. Two Service State Audit attempts have failed (see Test #256). The port is not usable for any outgoing calls to the terminal adapter (although incoming calls from the terminal adapter are accepted over this port, other ports in the PRI Endpoint can still be used for both incoming and outgoing calls to and from the terminal adapter) until the test passes and the port state is changed to in-service (use the **status pri-endpoint <extension>** command to investigate the port status).

I. This error type appears when the switch receives an ISDN RESTART message for an ISDN port that is not idle. Usually, calls are not cleared via the RESTART message. Therefore, this error type may be associated with a dropped call report from a user.

The following Aux Data values for Error Type 3585 represent the port's ISDN call state at the time that the unexpected request to restart the channel is received from the remote terminal adapter. This information can be useful if dropped calls (cutoffs) are being reported by users of the PRI Endpoint.

The following list contains important Aux values. Any other such values can be ignored.

10	A call in a stable, talking state was cleared unexpectedly by the far-end terminal adapter with an ISDN RESTART message. This state is called the "active" state.
4, 7, 8, 260, 263	A call that did not reach the active state but at least reached a ringing state was cleared unexpectedly by the far-end terminal adapter with an ISDN RESTART message.
1, 3, 6, 9, 265	A call that has not yet reached a ringing state was cleared unexpectedly by the far-end terminal adapter with an ISDN RESTART message.
11, 12, 19, 531, 267, 268	A call that was in the process of clearing has been nonetheless cleared by the far-end terminal adapter with an ISDN RESTART message. If this condition occurs frequently, it may mean that the far-end terminal adapter is attempting to clear ports that it thinks are in a "hung" state. The RESTART message brings the port to an idle condition.

System Technician-Demanded Tests: Descriptions and Error Codes

Always investigate tests in the order presented in the table below when inspecting errors in the system. By clearing error codes associated with the *NPE Crosstalk Test*, for example, you may also clear errors generated from other tests in the testing sequence.

Table 3-231. System Technician-Demanded Tests: DS1-BD

Order of Investigation	Short Test Sequence	Long Test Sequence	D/ND[1]
NPE Crosstalk Test (#6)		X	ND
Conference Circuit Test (#7)		X	ND
Audit and Update Test (#36)	X	X	ND
Signaling Link State Check Test (#255)	X	X	ND
Service State Audit Test (#256)	X	X	ND
Call State Audit Test (#257)	X	X	ND

1. D = Destructive, ND = Non-destructive

NPE Crosstalk Test (#6)

The NPE Crosstalk Test verifies that this port's NPE channel talks on the selected time slot and that it never crosses over to time slots that are reserved for other connections. If the NPE is not working correctly, one-way and noisy connections may be observed. This test is usually only part of a port's long test sequence, and takes about 20 to 30 seconds to complete.

Table 3-232. TEST #6 NPE Crosstalk Test

Error Code	Test Result	Description/Recommendation
	ABORT	Could not allocate the necessary system resources to run this test. 1. Retry the command at 1-minute intervals a maximum of 5 times.
1000	ABORT	System resources required to run this test are not available. The port may be in use on a valid call. Use **status pri-endpoint <extension>** commands to determine when the port is available for testing. 1. Retry the command at 1-minute intervals a maximum of 5 times.
1001	ABORT	Could not allocate the necessary system resources to run this test. 1. Retry the command at 1-minute intervals a maximum of 5 times.

Continued on next page

Table 3-232. TEST #6 NPE Crosstalk Test — *Continued*

Error Code	Test Result	Description/Recommendation
1002	ABORT	The system could not allocate time slots for the test. The system may be under heavy traffic conditions or it may have time slots out-of-service due to TDM Bus errors. The **status health** command can be used to determine if the system is experiencing heavy traffic. Refer to TDM Bus Maintenance to diagnose any active TDM Bus errors. 1. If system has no TDM Bus errors, and if it is not handling heavy traffic, repeat the test at 1-minute intervals a maximum of 5 times.
1003	ABORT	The system could not allocate a tone receiver for the test. The system may be oversized for the number of tone detectors present, or some tone detectors may be out-of-service. The **list measurements tone-receiver** command displays information on the system's tone receiver. 1. Look for TTR-LEV errors in the Error Log. If errors are present, refer to TTR-LEV. 2. Look for TONE-PT errors in the Error Log. If errors are present, refer to TONE-PT. 3. If neither condition exists, retry the test at 1-minute intervals a maximum of 5 times.
1004	ABORT	The port has been seized by a user for a valid call. Use **status pri-endpoint <extension>** commands to determine when the port is available for testing. 1. Retry the command at 1-minute intervals a maximum of 5 times.
1117	ABORT	A service state audit message is outstanding. 1. Wait 2 minutes and then try again.
2000	ABORT	Response to the test request was not received within the allowable time period. 1. Retry the command at 1-minute intervals a maximum of 5 times.
2020	ABORT	The test did not run due either to an already existing error on the specific port or to a more general circuit pack error. 1. Examine the Error Log for existing errors against this port or the circuit pack and attempt to diagnose the already existing error.
2100	ABORT	Could not allocate the necessary system resources to run this test. 1. Retry the command at 1-minute intervals a maximum of 5 times.

Continued on next page

Table 3-232. TEST #6 NPE Crosstalk Test — *Continued*

Error Code	Test Result	Description/Recommendation
Any	FAIL	The NPE of the tested port was found to be transmitting in error. This causes noisy and unreliable connections. The PE-BCHL is moved to the out-of-service/near-end state. 1. Replace the circuit pack.
	PASS	The port is able to communicate over the TDM Bus.

Conference Circuit Test (#7)

One or more Network Processing Elements (NPEs) reside on each circuit pack with a TDM Bus interface. (The TN464C UDS1 circuit pack has one SCOTCH-NPE chip instead of several NPE chips.) The NPE controls port connectivity and gain, and it provides conferencing functions on a per port basis. The Conference Circuit test verifies that the NPE channel for the port being tested can correctly perform the conferencing function. The NPE is instructed to listen to several different tones and to conference the tones together. The resulting signal is then measured by a tone detector port. If the level of the tone is within a certain range, the test passes.

Table 3-233. TEST #7 Conference Circuit Test

Error Code	Test Result	Description/Recommendation
	ABORT	Could not allocate the necessary system resources to run this test. 1. Retry the command at 1-minute intervals a maximum of 5 times.
1000	ABORT	System resources required to run this test are not available. The port may be in use on a valid call. Use the **status pri-endpoint <extension>** command to determine when the port is available for testing.
1004	ABORT	The port has been seized by a user for a valid call. Use the **status pri-endpoint <extension>** command to determine when the port is available for testing. 1. Retry the command at 1-minute intervals a maximum of 5 times.
1020	ABORT	The test did not run due either to an already existing error on the specific port or to a more general circuit pack error. 1. Examine Error Log for existing errors against this port or against the circuit pack, and attempt to diagnose the already existing error.

Continued on next page

Table 3-233. TEST #7 Conference Circuit Test — *Continued*

Error Code	Test Result	Description/Recommendation
2000	ABORT	Response to the test request was not received within the allowable time period.
2100	ABORT	Could not allocate the necessary system resources to run this test. 1. Retry the command at 1-minute intervals a maximum of 5 times.
Any	FAIL	The NPE of the tested port did not conference the tones correctly. This causes noisy and unreliable connections. 1. Replace the circuit pack. Even though wideband calls do not use the conferencing feature on the NPE, this failure indicates problems with the circuit pack hardware.
	PASS	The port can correctly conference multiple connections. User-reported troubles on this port should be investigated by using the other port tests and by examining the terminal adapter or the external wiring.

Audit and Update Test (#36)

This test sends port level translation data from the switch processor to the UDS1 interface circuit pack to ensure that the port's translation is correct. The port audit operation verifies the consistency of the current state of the port that is kept in the UDS1 interface circuit pack and in the switch software.

Table 3-234. TEST #36 Audit and Update Test

Error Code	Test Result	Description/Recommendation
	ABORT	Internal system error
2000	ABORT	Response to the test request was not received within the allowable time period.
2100	ABORT	Could not allocate the necessary system resources to run this test. 1. Retry the command at 1-minute intervals a maximum of 5 times.
	FAIL	The test failed due to Internal system error. 1. Retry the command at 1-minute intervals a maximum of 5 times.

Continued on next page

Table 3-234. TEST #36 Audit and Update Test — *Continued*

Error Code	Test Result	Description/Recommendation
	PASS	The port translation has been updated successfully. The current port states kept in the UDS1 interface circuit pack and in the switch software are consistent. If the port is busied out, the test does not run, but returns PASS. To verify that the port is in-service: 1. Enter **status pri-endpoint <extension>** to verify that the port is in-service. If the port is in-service, no further action is necessary. If the port is out-of-service, go to Step 2. 2. Enter the **release pri-endpoint <extension>** command or the **release port <PCSSpp>** command to put the port back into in-service. 3. Retry the test command.

Signaling Link State Check Test (#255)

As is noted in the general description for a PRI Endpoint Port, the operation of the PRI Endpoint Port depends on the health of the UDS1 interface circuit pack and of the TN765 Processor Interface Link. This test checks the status of those critical elements.

Table 3-235. TEST #255 Signaling Link State Check Test

Error Code	Test Result	Description/Recommendation
	ABORT	Internal system error 1. Retry the command at 1-minute intervals a maximum of 5 times.
1700	ABORT	Rollabout video abort. The PRI terminal adapter associated with this PRI endpoint extension is detached from the circuit pack. This is a normal abort when the rollabout video feature is enabled. To complete the test on this port, do one of the following: 1. Re-attach the disconnected PRI terminal adapter, or 2. Disable the rollabout video feature on this circuit pack by entering the **change ds1 PCSS** command, and set the field `Alarm when PRI Endpoint Detached?` to **y**.

Continued on next page

Table 3-235. TEST #255 Signaling Link State Check Test — *Continued*

Error Code	Test Result	Description/Recommendation
4	FAIL	There is a problem with the Signaling Channel and/or with the Processor Interface Link. 1. Consult the procedure for the ISDN-PRI Signaling Group (ISDN-GRP) and/or the procedures for Packet Interface (PKT-INT). Further information may also be obtained by consulting the procedures for the ISDN-PRI Signaling Channel (ISDN-LNK).
8	FAIL	There is a problem with the UDS1 interface circuit pack. 1. Consult the procedures for UDS1 interface circuit pack (UDS1-BD).
	PASS	The signaling link hardware is okay.

Service State Audit (#256)

As is noted in the general description for PRI Endpoint Port, these ports may be in one of several service states as defined by the ISDN-PRI Specification. This test performs a service state audit with the far-end terminal adapter to ensure that both sides agree on the service state.

A PASS for this test simply means that an audit message was successfully composed and sent out to the far-end terminal adapter. The ISDN Specification allows up to two minutes for a reply. If no reply is received within that two minute window, this switch automatically tries once again. If that attempt fails, an error is logged (Error Type 3073), and the switch attempts a recovery by automatically retrying approximately every 15 minutes. If the port was initially in the INS (in-service) state, it is now placed into the MTC/FE (maintenance state, far-end problem) state. Until a Service State Audit attempt is successful, no outgoing calls are placed over this port, but incoming calls are be accepted. The service state of this port does not affect the service state of other ports in the PRI Endpoint. If an incoming call that uses this port is presented while in such a state, a Service State Audit attempt is immediately attempted (that is, the switch does not wait for the 15 minute cycle, but instead tries to recover immediately). To investigate the status of this PRI Endpoint Port, issue the **status pri-endpoint <extension>** command.

Table 3-236. TEST #256 Service State Audit Test

Error Code	Test Result	Description/Recommendation
1113	ABORT	The signaling link has failed. As a result, the system cannot send any messages on behalf of this port. 1. Check the results of Test #255 (Signaling Link State Check).
1117	ABORT	A service state audit message is outstanding. 1. Wait two minutes and try again.
1700	ABORT	Rollabout video abort. The PRI terminal adapter associated with this PRI endpoint extension is detached from the circuit pack. This is a normal abort when the rollabout video feature is enabled. To complete the test on this port, do one of the following: 1. Re-attach the disconnected PRI terminal adapter, or 2. Disable the rollabout video feature on this circuit pack by entering the **change ds1 PCSS** command, and set the field "Alarm when PRI Endpoint Detached?" to "y."
2100	ABORT	Could not allocate the necessary system resources to run this test. 1. Retry the command at 1-minute intervals a maximum of 5 times.
	FAIL	Internal system error 1. Retry the command at 1-minute intervals a maximum of 5 times.
	PASS	Wait 4 minutes and then check the Error Log for any new occurrences of Errors Type 3073. If there are no occurrences of this error, both sides of the ISDN connection agree on the service state, and the negotiation succeeded. If there is a new occurrence of Error Type 3073, the negotiation failed (that is, the far-end terminal adapter twice failed to respond within the mandatory two minute window). This switch automatically retries approximately every 15 minutes. If the port was initially in the INS (in-service) state, it is now be placed into the MTC/FE (maintenance, far-end problem) state. Incoming calls are accepted, but no outgoing calls are originated from this port. If an incoming call is presented, another Service State Audit is immediately performed in an attempt to bring the PRI Endpoint Port to the proper state.

Call State Audit Test (#257)

If a call is active on the port, the switches on both sides of the connection should agree on the ISDN state of the call as defined in the ISDN Protocol Specification. This test audits internal call state data by querying the far-end terminal adapter

about the ISDN state of the call. It can be helpful when trying to clear a hung call. If the internal call state data on the near-end switch is different than that of the far-end terminal adapter, **the call is torn down.**

As with Test #256 (Service State Audit), a PASS simply means that an appropriate message was composed and sent to the far-end terminal adapter. The ISDN Specification allows up to two minutes for a reply. If a reply is not received within the two minute window, a protocol time-out violation is recorded in the error log against the associated signaling channel (ISDN-PRI Signaling Link Port, which is listed in the Error Log as ISDN-LNK; the Error Type is 1).

Table 3-237. TEST #257 Call State Audit Test

Error Code	Test Result	Description/Recommendation
1019	ABORT	An audit is already in progress. 1. Wait two minutes and try again.
1113	ABORT	The signaling link has failed. As a result, the system cannot send any messages on behalf of this port. 1. Check the results of Test #255 (Signaling Link State Check).
1116	ABORT	The port is in an out-of-service ISDN service state. 1. A call cannot be present if the port is in an ISDN out-of-service state. As a result, a call state audit would be inappropriate, and no action is necessary. (Use the **status pri-endpoint <extension>** command to investigate the ISDN state of the port).
1700	ABORT	Rollabout video abort. The PRI terminal adapter associated with this PRI endpoint extension is detached from the circuit pack. This is a normal abort when the rollabout video feature is enabled. To complete the test on this port, do one of the following: 1. Re-attach the disconnected PRI terminal adapter, or 2. Disable the rollabout video feature on this circuit pack by entering the **change ds1 PCSS** command, and set the field "Alarm when PRI Endpoint Detached?" to "y."
2100	ABORT	Could not allocate the necessary system resources to run this test. 1. Retry the command at 1-minute intervals a maximum of 5 times.
	FAIL	Internal system error 1. Retry the command at 1-minute intervals for a maximum of 5 times.
	PASS	This switch sent a call state auditing message to the far-end terminal adapter to verify the state of the call active on this port. If a call state mismatch is found, the call is torn down within two minutes. If no call was active, no message was sent.

PKT-INT (Packet Interface)

MO Name (in Alarm Log)	Alarm Level	Initial Command to Run	Full Name of MO
PKT-INT	MAJOR	reset io-processor	Packet Interface
PKT-INT	MINOR	test packet-interface [1a] l	Packet Interface
PKT-INT	WARNING	test packet-interface [1a] l	Packet Interface

The Packet Interface (PKT-INT) provides PRI link through the TDM bus. In addition to affecting telephone service, a failure of the Packet Interface will affect service provided by the following circuit packs that connect to the TDM bus:

- TN464C or higher Universal DS1 circuit pack — ISDN PRI service

The links that pass through the Packet Interface are identified as system links as follows:

1. System links
   - ISDN PRI D channel signaling links
   - ISDN BRI D channel broadcast and point-to-point signaling links

Only one Packet Interface is configured for this software release.

Packet Interface Service Operations

The following sections provides more background information about Packet Interface service operations.

Administration

There are no **add** or **remove** commands associated with the Packet Interface. The Packet Interface is always present in the system, even if no ISDN application is administered.

Packet Interface Replacement

When replacing a Packet Interface (as part of the TN798 Processor circuit pack), follow the procedure used for replacing the TN798 Processor circuit pack in the SPE carrier. The SPE carrier must be powered down before the Packet Interface is removed and then the SPE carrier must be powered back up after the circuit pack is inserted.

Demand Reset of a Packet Interface Board

The Packet Interface runs on the IO-Processor, which is part of the TN798 Processor circuit pack. In this software release, the whole IO-Processor must be reset in order to reset the Packet Interface with the **reset io-processor** command. The **reset packet-interface** command has been made unavailable in this software release. A demand reset of the IO-Processor (and the Packet Interface) via the entry of a **reset io-processor** command will be denied by system software if the IO-Processor is in service (has not been placed in an out-of-service state by background maintenance software). Otherwise, a reset of an in-service IO-Processor would cause severe service disruption. The software that controls IO-Processor and Packet Interface maintenance puts the IO-Processor and Packet Interface in the out-of-service state if the IO-Processor has been reset 3 times within the last 15 minutes. The IO-Processor is reset as part of the automatic recovery action that is initiated when a hardware fatal fault condition is detected.

Service States

Packet Interface maintenance software maintains a state variable that keeps track of the in-service/out-of-service state of each Packet Interface. If maintenance software detects that a Packet Interface has a ‘‘fatal fault’’, it will automatically attempt to reset that circuit pack as quickly as possible. An extensive set of diagnostic tests are run when the circuit pack is reset.

If the circuit pack diagnostic tests do not pass, the failing Packet Interface is placed in an out-of-service state. All links handled by that circuit pack will go out of service. This is a disruptive action.

A Packet Interface will also be put in the ‘‘out-of-service’’ state if the hardware has reported a fatal fault at system initialization time or if the IO-Processor has been reset by background maintenance 3 times within the last 15 minutes, whether or not the Reset test passes. The state of a Packet Interface can be determined by using the **status packet-interface** command.

Maintenance Object Interactions

- IO-Processor Maintenance

  The IO-Processor supports both the Data Channel data scanners and the Packet Interface. A Packet Interface Flash Memory Checksum Test results in the Flash memory of the whole IO-Processor being tested. An IO-Processor reset results in the Packet Interface being reset. A background Packet Interface reset results in the whole IO-Processor being reset. When the IO-Processor is being take out of service, the Packet Interface and Data Channel data scanners are also taken out of service.

- Other Packet Circuit Pack Maintenance

The operation of the Packet Interface affects the operation and maintenance of other packet circuit packs. This includes:

1. BRI applications (BRI-PT)
2. Universal DS1 applications (UDS1) for ISDN/PRI applications

Some errors of Packet Circuit Packs may require examination of the Packet Interface operating status. To obtain this information, examine the Error and Alarm Logs for PKT-INT entries. Also issue the **status packet-interface** command to determine the service state of the Packet Interfaces (e.g., in-service/out-of-service) and information about the total number of Packet Interface links assigned to a Packet Interface.

In general, if all links for a Packet Interface are shown in the ‘‘Failed Links’’ category, there may be a fault on the Packet Interface (the TN798 Processor circuit pack) or on the Packet Bus that caused all links to go down. If only a small percentage of the links are shown as ‘‘Failed Links,’’ then the Packet Interface (the TN798 Processor circuit pack) is probably not the source of the problem. Examples of the source of individual link failures include the failure of a BRI telephone set, a disconnect of the cord to a BRI set and the disconnect of a BRI set causes three link failures. See ‘‘status packet-interface’’ in Chapter 2, ‘‘Maintenance Commands for R6csi’’ for more information on this command.

For the case where not all links are in the ‘‘Failed Links’’ category, examine the alarm log and error log for failures of the following circuit pack types and follow the repair procedures for those circuit packs before considering replacing the TN798 Processor circuit pack:

- ISDN-BRI Line circuit packs, ports, and stations (BRI-BD, BRI-PORT, BRI-SET)
- Universal DS1 circuit packs and ports (UDS1-BD, TIE-DS1)

Error Log Entries and Test to Clear Values

Table 3-238. Packet Interface Error Log Entries

Error Type	Aux Data	Associated Test	Alarm Level	On/Off Board	Test to Clear Value
0[1]	0	Any	Any	ON	test packet-interface [1a] l r 2
1 (a)	Any	None	MAJOR	ON	reset io-processor[2]
10 (b)	0	None			
23 (c)	0	None	MAJOR	OFF	
50 (d)	0	None			
100 (e)	0	None			

Continued on next page

Table 3-238. Packet Interface Error Log Entries — *Continued*

Error Type	Aux Data	Associated Test	Alarm Level	On/Off Board	Test to Clear Value
217 (g)	0	None	WARNING	OFF	
257 (f)	Any	None	MAJOR	ON	reset io-processor[2]
267 (g)	0	None	WARNING	OFF	
513 (h)	Any	None	MAJOR	ON	reset io-processor[2]
1793 (i)	Any	Memory Checksum Test (#884)	MINOR	ON	test packet-interface [1a] l r 2
3074 (j)	Any	None	WARNING	OFF	

1. Indicates that an alarm was raised but an associated error was not entered into the hardware error log due to a momentary overload condition caused by a burst of hardware or software error reports. Run the long test sequence. Refer to the appropriate test descriptions for any failures and follow the recommended procedures.
2. The I/O Processor/Packet Interface can only be reset if it has been taken out of service by background maintenance software.

Notes:

a. Error 1 occurs when background maintenance software has reset the Packet Interface as a fault recovery action. It is used to keep track of the number of times that the Packet Interface is reset, independent of whether or not the Reset test passed. Once three of these errors have occurred in the last 15 minutes, maintenance will place the Packet Interface into an out-of-service state, and a MAJOR on-board alarm will be raised on the Packet Interface.

   1. Check to see if error codes 257, 513, 769, 1025, 1281, or 3841 are present in the hardware error log. If one or more of those error codes are present, refer to the information associated with those errors for the appropriate repair procedures.

   2. If no other Packet Interface errors appear in the error log, and if the Packet Interface is not in a held reset state as indicated by the absence of a MAJOR alarm with a Service State of OUT, no action should be taken. If a Packet Interface MAJOR alarm is present and no other Packet Interface error codes are in the hardware error log, execute a demand reset by entering **reset io-processor**.

b. Error 10 indicates that the Packet Interface maintenance software caused an escalating system WARM restart as part of a recovery action for certain Packet Interface failures. A SYSTEM error type 10 should also be present, indicating that a software initiated WARM restart occurred.

1. Check to see if error types 513, 1025, or 3074 are present in the hardware error log. If they are present, refer to the repair procedures for those errors for further action.

c. Error 23 along with an associated MAJOR alarm indicates that (a) Packet Interface translation data was loaded at boot time but the Packet Interface was not detected to be physically present

1. If the Packet Interface is physically present, replace the circuit pack. The SPE must be rebooted to resolve the alarm.

d. Error 50 indicates that the SPE is sending more downlink messages than the Packet Interface can keep up with. This is an in-line error not produced by any test. When this error is reported, application software is slowed down to allow the Packet Interface to process existing downlink messages. If there is a hardware problem, the Packet Interface test will normally cause other errors to be logged. In the rare case where there are no other PKT-INT errors logged but error 50 occurs more than 10 times in the last hour, follow normal escalation procedures.

e. Error 100 indicates that the SPE requested a reset of Packet Interfaces as part of a Packet Interface recovery action.

1. If no other PKT-INT errors except error code 1 are present, this means that that the Packet Interface was in a fatal fault state at the time of system initialization or SPE interchange and it was reset successfully. No other actions are required.
2. If PKT-INT error codes other than error code 1 are present, refer to the repair procedures for those errors to correct the failure.

f. Error 257 indicates that the circuit pack detected a fatal failure. This error is a very serious and when it occurs, maintenance software immediately escalates testing to the destructive reset test (#889).

1. If the Packet Interface circuit has a MAJOR alarm:

a. Reset the Packet Interface using the **reset io-processor** command.

2. If the Packet Interface is not alarmed, no action is required.

g. Errors 267 and 217 indicate that the number of Packet Interfaces detected as being physically present exceeds number of Packet Interfaces supported by the software configuration.

h. Error 513 is called Message Handshake failure. It indicates that a failure with the message protocol between the SPE software and the Packet Interface was detected.

1. If the Packet Interface circuit has a MAJOR alarm:

a. Reset the Packet Interface using the **reset io-processor** command.

2. If the Packet Interface is not alarmed, no action is required.

i. Error 1793 indicates a FLASH Memory test failure. The Packet Interface may still be operational if no other errors are reported. However the circuit pack may report a fatal fault during board initialization. This may occur during a system recovery level more severe than a WARM restart. For more information, refer to the repair procedures of Test #884.

j. Errors 3074 indicate PKT-INT Transmit Buffer Overflow, which means that the number of transmit buffers required by software exceeded the number available. A 3074 error is generated when the PKT-INT sends an in-line hardware error to maintenance software indicating transmit buffer overflow.

   1. Check for errors logged that are associated with the System Ports, BRI Line circuit packs and BRI endpoints, and the Universal DS1 circuit packs supporting PRI service. Errors against those components should be cleared first.

   2. If no other error is observed, no action is required.

System Technician-Demanded Tests: Descriptions and Error Codes

Always investigate tests in the order presented in the table below.

Order of Investigation	Short Test Sequence	Long Test Sequence	D/ND[1]
Packet Interface Memory Checksum Test (#884)		X	ND
Packet Interface Error Counter Read and Clear Test (#887)	X	X	ND

1. D = Destructive; ND = Nondestructive

Memory Checksum Test (#884)

This test involves sending a message to the Packet Interface to run private non-destructive memory checksum tests on the firmware text residing in Boot PROM and FLASH memory. If the test fails during background testing, the circuit pack will remain operational until a reset is executed on the circuit pack. Then the initialization firmware will fail and will put the circuit pack in an out-of-service state.

This test results in the memory for the whole I/O Processor to be tested. The I/O Processor does not support its own Flash Memory Checksum Test.

Table 3-239. TEST #884 Memory Checksum Test

Error Code	Test Result	Description/ Recommendation
1006 1137	ABORT	Packet Interface is in the out-of-service state so normal maintenance tests will not run. 1. Request a Packet Interface reset using the **reset io-processor** command. Refer to the IO-PROCR Maintenance repair procedures for further action.
1334	ABORT	The Packet Interface command queue is full. This should be a temporary condition caused by a high rate of commands being sent to a Packet Interface. Continued operation with a full command queue will cause a system WARM restart that may escalate to more severe restart levels. 1. Retry the command at 10-second intervals, a maximum of 5 times.
2000	ABORT	Response to the test request was not received within the allowable time period. 1. Retry the command at 1-minute intervals, a maximum of 3 times.
2500	ABORT	Internal system error 1. Retry the command.
	NO BOARD	The Packet Interface is not detected as being physically present. 1. Replace the TN798 Processor circuit pack.
1537	FAIL	The Boot PROM memory checksum test failed. The circuit pack may still be operational. 1. Retry the command. 2. If the same error code occurs a. Replace the TN798 Processor circuit pack at a time that would cause the least disruption of service. The circuit pack is still functional but should be replaced since it may not operate after a system reboot and it will enter a fatal fault state if it is reset for other reasons.
1793	FAIL	The Flash memory checksum test failed. The circuit pack may still be operational but it will fail if a reset is executed. 1. Retry the command. 2. If the same error code occurs a. Replace the circuit pack at a time that would cause the least disruption of service. The circuit pack is still functional but should be replaced since it may not operate after a system reboot and it will enter a fatal fault state if it is reset for other reasons.
	PASS	The circuit pack's firmware is in a proper state.

Read and Clear Board Counters (#887)

This test involves sending commands to read on-circuit pack error counters on the Packet Interface. It also verifies the message interface between the SPE and the Packet Interface.

This test reads and clears the Parity Error counter and FIFO Overflow counter. Information about the number of bad Translation location is sent to maintenance software as an in-line error from the circuit pack so it is not necessary to read a counter location.

Table 3-240. TEST #887 Read and Clear Board Counters

Error Code	Test Result	Description/ Recommendation
1006 1137	ABORT	Packet Interface is in the out-of-service state so normal maintenance tests will not run on that circuit pack. 1. Request a Packet Interface reset using the **reset io-processor** command. Refer to the IO-PROCR Maintenance Object repair procedures for further action.
2000	ABORT	Response to the test request was not received within the allowable time period. 1. Retry the command at 1-minute intervals a maximum of 3 times.
2500	ABORT	Internal system error 1. Retry the command.
256 512 768	FAIL	The Packet Interface on the active SPE has an error counter set. The following error codes are possible: 256: Parity error 512: FIFO overflow 768: Parity error and FIFO overflow error 1. If error code 256 or 768 is reported the Packet Interface received a parity error off the Packet Bus. a. Check for alarms and errors logged against other circuit packs connected to the Packet bus in the Processor Port Network cabinet. A list of packet circuit packs is presented in the first section of this repair procedure. Refer to the repair procedures for those circuit packs, in this manual, to clear those errors first. b. Replace the TN798 Processor circuit pack at a time that would cause the least disruption of service. The circuit pack is still functional but should be replaced. The receive FIFO in the PKT-INT has overflowed. This may be an indication that additional Packet Interface is required. For the current hardware configuration, only one Packet Interface is allowed. Retry the command after a 1-minute delay and if the test continues to fail: 1.) Replace the circuit pack at a time that would cause the least service disruption.
	PASS	The SPE is able to communicate with the Packet Interface.

Continued on next page

PMS-LINK (Property Management System Link)

MO Name (in Alarm Log)	Alarm Level	Initial Command to Run	Full Name of MO
PMS-LINK	MINOR	test pms l	PMS Link
PMS-LINK	WARNING	test pms	PMS Link

Property Management System (PMS) is a stand-alone computer system that a hotel/motel-type and a hospital-type environment use for services such as reservations, registration, messaging, housekeeping, night audit, billing, and inventory. The PMS Link provides a communications channel between DEFINITY Generic 1 or Generic 3iV2 and a customer-owned PMSs so that the PMS can interrogate the system about the information related to the following features:

- Message Waiting Notification
- Controlled Restriction
- Housekeeping Status
- Check-in/Check-out
- Room Change/Room Swap

Refer to *DEFINITY Enterprise Communications System Release 6 Administration and Feature Description* for details on the PMS feature. The PMS Link is administered to a data extension that provides a standard EIA 232C interface to the PMS. A PMS can be connected through a data module (PDM, MPDM, DTDM) and a port on the TN754 or TN754B Digital Line circuit pack, or through an ADU and a port on the TN726 Digital Line circuit pack.

The PMS Link Maintenance strategy includes a set of tests for periodic diagnosis, detection of errors during normal operation, actions for troubleshooting, and raising alarms for serious problems. PMS Link Maintenance uses a "try-and-wait" mechanism for maintaining the PMS Link. If a PMS Link is torn down due to an error, PMS Link Maintenance attempts to bring up the link immediately. If the trial of "Link Setup" fails, PMS Link Maintenance waits for five minutes before the next retry. If the number of retries reaches the value of a threshold (12), a Minor alarm is raised for service attention.

PMS Link Maintenance does not cover the maintenance of the elements composing the PMS physical link (for example, the external PMS device, Data Module (PDM/MPDM/DTDM), and Digital Line Port of TN754 or TN754B Digital Line circuit pack, ADU and Data Line Port of TN726 Data Link circuit pack). If PMS Link Maintenance cannot restore the PMS Link, then the maintenance tests of these individual components of the PMS Link must be executed to diagnose faults. If system technician-demanded **test pms-link** command fails, no alarm is generated.

Procedures for Restoring the PMS Link

1. Determine the status of the PMS Link.

   Enter **status pms** command and make sure that the PMS Link is not busied out for maintenance. If the link is "down," then continue with the next step.

2. Where does the PMS Link connect?

   Enter **display system hospitality** and find out the destinations of the PMS Link.

3. Determine the status of the data extension.

   Enter **status data <extension>** command and verify whether the data extension is in in-service/idle state. If the data extension is NOT available, then look for the extension number in Alt Name field of Hardware Error Log. Refer to the XXX-BD (Common Port Circuit Pack) Maintenance documentation for resolutions.

4. Is a data channel on Network Control circuit pack in in-service/idle state?

   Enter **list data** command and find out the extension numbers of data channels on Network Control circuit pack. Enter **status data <extension>** command and make sure that at least one data channel is in in-service/idle state. If no data channel is available, then look for DATA-CHL/DATA-CON/DATA-BD errors in the Hardware Error Log. If present, refer to the DATA-BD (Network Control Circuit Pack) Maintenance documentation; if not present, escalate the error.

5. Is the external PMS device available?

   Make sure that the PMS device is ON-LINE and ready for service. Check the physical connectivity between Data Module and the PMS device.

It is recommended that you busy out the PMS Link before executing maintenance tests over objects composing the PMS Link. If the PMS Link is busied out, then all PMS Link maintenance actions are deactivated. The interference to tests of other MO is off.

Hardware Error Log Entries and Test to Clear Values

Table 3-241. PMS-LINK Error Log Entries

Error Type	Aux Data	Associated Test	Alarm Level	On/Off Board	Test to Clear Value
0[1]	0	Any	Any	Any	test pms sh r 1
18 (a)	0	busyout pms-link	WARNING	OFF	release pms-link

Continued on next page

Table 3-241. PMS-LINK Error Log Entries — *Continued*

Error Type	Aux Data	Associated Test	Alarm Level	On/Off Board	Test to Clear Value
257 (b)	0-6, 99, 255	Link Retry Test (#215)	MINOR/ WARNING[2]	OFF	test pms-link l
513 (c)	0-6,255	None			test pms-link
769 (d)	0-6,255	None			
1025 (e)	4x[3]	None			
1281 (f)	1x[3]	None			
1537 (g)	Nx[3]	None			
1793 (h)	0-6,255	None			test pms-link
2049 (i)	0-6,255	None			
2305 (j)	5x[3]	None			release pms-link or test pms-link
2561 (k)	0-6,255	None			test pms-link
2817 (l)	10x[3] 20x[3] 30x[3]	None			
3073 (m)	7x[3]	None			
3841 (n)	2x[3]	None			

1. Run the Short Test Sequence first. If all tests pass, run the Long Test Sequence. Refer to the appropriate test description and follow the recommended procedures.
2. Minor alarms on this MO may be downgraded to Warning alarms based on the value used in the **set options** command.
3. Is any integer.

Notes:

a. The PMS Link has been busied out for system technician-demanded maintenance via the **busyout pms-link** command. The link is torn down. Enter the **release pms-link** command to restore the link.

b. The Link Retry Test (#215) fails. The Aux Data field contains either the Channel ID of Data Channels on Network Control circuit pack (that is, 3 for Channel 01, 4 for Channel 02, 5 for Channel 03, 6 for Channel 04) or an Error Type of 99 indicating no data channels are available for setting up the link, or an Error Type of 255 for the internal system error generated upon initialization or power-up. Refer to the "Procedures for Restoring the PMS Link" section for resolution.

c. The PMS physical link is down due to the following causes: cable to the PMS device is disconnected; the PMS device is powered off; or the data extension to which the PMS device connects has been busied out. The Aux Data field contains the Channel ID of Data Channels on Network Control circuit pack (that is, 3 for Channel 01, 4 for Channel 02, 5 for Channel 03, 6 for Channel 04) or an Error Type of 255 for the internal system error generated upon initialization or power-up. Check the connectivity of wire and cable among wall jacket, data module, and the PMS device. Enter **status data <extension>** and verify that the data extension of the PMS device is in in-service/idle state. If the data extension is not available, then refer to the ''Procedures for Restoring the PMS Link'' section for recommended repair strategy.

d. No communication between DEFINITY Generic 1 or Generic 3iV2 and PMS for a period of time (the time is specified in "system hospitality" administration). The PMS Link is torn down. To clear this error, refer to the ''Procedures for Restoring the PMS Link'' section.

e. The link was taken down because the switch could not receive an incoming message from the PMS. The message from the PMS repeatedly had corrupted data or the switch received requests for acknowledgment but never received a message to be processed. If this error type recurs frequently (that is, more than once a month), then advise the customer to call the vendor of the PMS to check out the PMS device. Once the PMS Link is successfully established, this error disappears from the Hardware Error Log.

f. The link was taken down because the switch could not send an outgoing message. The message, which was sent but not acknowledged, was flushed. If this error type recurs frequently (that is, more than once a month), then advise the customer to call the vendor of the PMS to check out the PMS device. Once the PMS Link is successfully established, this error disappears from the Hardware Error Log.

g. The PMS has been busied out for maintenance at the request of the PMS. The PMS Link is torn down. The reason code (N), if present, is that supplied by the PMS in the request message. If this error type recurs frequently (that is, more than once a month), then advise the customer to call the vendor of the PMS to check out the PMS device. Once the PMS Link is successfully established, this error disappears from the Hardware Error Log. No alarm is raised against this error.

h. PBX buffer overflows due to either heavy call traffic or PMS protocol message rate being faster than the PMS/PBX protocol specifications allow. The PMS Link is torn down. PMS Link maintenance software waits for five minutes before attempting to set up the link again. If this error type recurs frequently (that is, more than once a month), advise the customer to call the vendor of the PMS to check out the PMS device. Once the PMS Link is successfully established, this error disappears from the Hardware Error Log (see Note).

NOTE:
The PMS should be checked for adherence to message rate defined in the PMS/PBX protocol specifications. No alarm is raised against this error.

i. The attempt to swap the database between PBX and PMS failed 3 times consecutively due to excessive PMS/PBX protocol violations, buffer overflows, or PMS Link outages. The PMS Link is NOT torn down. If this error type recurs frequently (that is, more than once a month), then advise the customer to call the vendor of the PMS to check out the PMS device. Once the PMS Link is successfully established, this error disappears from the Hardware Error Log. No alarm is raised against this error.

j. The PMS Link has been busied out for system technician-demanded maintenance via the **busyout pms-link** command or has been brought down via the **test pms-link long** command. The PMS Link is torn down, and PMS Link maintenance stops attempting to reestablish the link in the case where the **busyout pms-link** command has been used. When the **test pms-link long** command has been used, PMS Link maintenance continues to try to reset the link. To restore the PMS Link after use of the **busyout pms-link** command, issue the **release pms-link** command. To restore the PMS Link after use of the **test pms-link long** command, issue the **test pms-link** command.

k. The PMS Link is physically established, but the protocol has not been started by the PMS before the protocol timer expires. The PMS Link is NOT torn down. If this error type recurs frequently (that is, more than once a month), advise the customer to call the vendor of the PMS to check out the PMS device. Once the PMS Link is successfully established, this error disappears from the Hardware Error Log.

NOTE:
The PMS should be checked to make sure that it attempts to start the protocol according to the PMS/PBX protocol specifications. No alarm is raised against this error.

l. Error Type 2817:

Aux values of concern:

10x The PMS violated the application protocol. The first message after a request to initiate a database exchange was not the start of a database exchange. The message is processed. If this error type with this aux data value recurs frequently (that is, more than once a month), then advise the customer to call the vendor of the PMS to check out the PMS device. Once the PMS Link is successfully established, this error disappears from the Hardware Error Log. See Note.

20x The PMS violated the application protocol. The start of a database exchange was received in a state in which it was not expected. The message is ignored. If this error type with this Aux data value recurs frequently (that is, more than once a month), then advise the customer to call the vendor of the PMS to check out the PMS device. Once the PMS Link is successfully established, this error disappears from the Hardware Error Log. See the next Note.

30x The PMS violated the application protocol. The end of a database exchange was received when no exchange was in progress. The message is ignored. If this error type with this Aux Data value recurs frequently (that is, more than once a month), then advise the customer to call the vendor of the PMS to check out the PMS device. Once the PMS Link is successfully established, this error disappears from the Hardware Error Log.

NOTE:
The PMS should be assessed for adherence to the PMS/PBX protocol specifications. No alarm is raised against this error.

m. The link was taken down by the switch because the threshold for application protocol violations has been exceeded by the PMS. The protocol never started and messages were received and/or messages were received in a state in which they were not expected. (Refer to Error Type 2817 for recommended strategy.)

n. Link was taken down by the switch because the threshold for link protocol violations has been exceeded by the PMS. PMS is sending "garbage" to the switch.

System Technician-Demanded Tests: Descriptions and Error Codes

Always investigate tests in the order presented in the table below when inspecting errors in the system. By clearing error codes associated with the *Link Retry Test*, for example, you may also clear errors generated from other tests in the testing sequence.

Order of Investigation	Short Test Sequence	Long Test Sequence	D/ND[1]
Link Tear Down Test (#213)		X	D
Link Retry Test (#215)	X	X	ND

1. D = Destructive; ND = Nondestructive

Link Tear Down Test (#213)

This test is destructive.

This test disconnects the existing link between the system and the external PMS device. If the link has been disconnected already, then this test just returns "PASS." All resources allocated for a PMS Link are released after this test.

Table 3-242. TEST #213 Link Tear Down Test

Error Code	Test Result	Description/ Recommendation
40 50	ABORT	Internal System Error. 1. Retry the command at 1-minute intervals a maximum of 5 times.
1010	ABORT	The PMS Link has been busied out and placed in the out-of-service state. 1. Enter **release pms-link** command to release the PMS Link from busyout state. 2. Retry **test pms long** command to execute the test.
	FAIL	Internal System Error. 1. Retry the command at 1-minute intervals a maximum of 5 times.
	PASS	The PMS Link is torn down.

Link Retry Test (#215)

This test sends a message to the PMS software process to make a data call to the extension where the PMS device connects. If the PMS Link is already up, then this test passes without making any data call.

Table 3-243. TEST #215 Link Retry Test

Error Code	Test Result	Description/ Recommendation
10 20	ABORT	Internal System Error. 1. Retry the command at 1-minute intervals a maximum of 5 times.
30	ABORT	Internal System Error. 1. Refer back to the "Procedures for Restoring the PMS Link" section for resolution.
1010	ABORT	The PMS Link has been busied out and placed in the out-of-service state. 1. Enter **release pms-link** command to release the PMS Link from busyout state. 2. Retry **test pms** command to execute the test.
	FAIL	The PMS Link CANNOT be established. 1. Refer back to the "Procedures for Restoring the PMS Link" section for restoring the PMS Link.
	PASS	The PMS Link is up.

PMS-PRNT/JNL-PRNT (PMS Printer Link)

MO Name (in Alarm Log)	Alarm Level	Initial Command to Run	Full Name of MO
PMS-PRNT/JNL-PRNT	MINOR	test journal pms-log/wakeup-log l	PMS Printer/ Journal Printer
PMS-PRNT/JNL-PRNT	WARNING	test journal pms-log/wakeup-log	PMS Printer/ Journal Printer

NOTE:
PMS-PRNT stands for the pms-log printer. JNL-PRNT stands for the wakeup-log printer. Since the maintenance strategy for the both the JNL-PRNT and PMS-PRNT MOs is the same, both of these MOs are described in this section.

There can be up to two journal printers: the wakeup-log printer, which is shared between the Automatic Wakeup feature and the Emergency Access to Attendant feature to print scheduled reports and log of events, and the pms-log printer, which is used as a backup of the PMS output device to print the audit trail data of all PMS transactions executed by the system and the PMS Housekeeping Status Change events while the PMS Printer Link is not available. The journal printer link is administered to a data extension that provides a standard EIA 232C interface to the printer. The printer can be connected through a data module (PDM, MPDM, DTDM) and a port on the TN754 or TN754B Digital Line circuit pack, or through an ADU and a port on the TN726 Data Line circuit pack.

PMS Printer Link Maintenance provides a strategy in the system for maintaining the link between the system and a PMS device (an external Journal Printer device). The strategy includes a set of tests for periodic diagnosis, detection of errors during normal operation, actions for troubleshooting, and raising alarms for serious problems. PMS Printer Link Maintenance uses a try-and-wait mechanism for maintaining the PMS Printer Link. If a PMS Printer Link is torn down due to an error, PMS Printer Link Maintenance intends to bring the link up immediately. If the trial of Link Setup fails, PMS Link Maintenance waits for five minutes before the next retry. If the number of retries reaches the value of a threshold (15), a Minor alarm is raised for service attention.

PMS Printer Link Maintenance does not cover the maintenance of the elements composing the journal printer physical link (for example, the external printer device, Data Module (PDM/MPDM/DTDM) and Digital Line Port of TN754 or TN754B Digital Line circuit pack, ADU and Data Line Port of TN726 Data Line circuit pack). If PMS Printer Link Maintenance cannot restore the PMS Printer Link, then the maintenance tests of these individual components of the PMS Link must be executed to diagnose faults.

Procedures for Restoring the PMS Printer Link

1. Determine the status of the PMS Printer Link.

   Enter **status journal-printer wakeup-log|pms-log** command and make sure that the journal printer link is not busied out for maintenance. If the link is down, then continue to the next step.

2. Where does the journal printer link connect?

   Enter **display system hospitality** and find out the destinations of the PMS Printer Link.

3. Determine the status of the data extension.

   Enter **status data extension** command and verify whether the data extension is in the in-service/idle state. If the data extension is NOT available, then look for the extension number in Alt Name field of Hardware Error Log. Refer to XXX-BD (Common Port Circuit Pack) Maintenance documentation for resolutions.

4. Is a data channel on the Processor circuit pack in the in-service/idle state?

   Enter **list data** command and find out the extension numbers of data channels on Processor circuit pack. Enter **status data extension** command and make sure that at least one data channel is in the in-service/idle state. If no data channel is available, look for DATA-CHL/DATA-CON/DATA-BD errors in the Error Log. If present, refer to “DATA-BD”Maintenance documentation.

5. Is the external printer device available?

   Make sure that the printer device is ON-LINE and ready for service. Check the physical connectivity between Data Module and the printer device.

It is recommended that you busyout the PMS Printer Link before executing maintenance tests over objects composing the PMS Printer Link. If the PMS Printer Link is busied out, then all PMS Printer Link maintenance actions are deactivated. The interference to tests of other MOs is off.

Error Log Entries and Test to Clear Values

Table 3-244. PMS-PRNT/JNL-PRNT Link Maintenance Error Log Entries

Error Type	Aux Data	Associated Test	Alarm Level	On/Off Board	Test to Clear Value
0[1]	0	Any	Any	Any	test journal wakeup-log|pms-log sh
18 (a)	0	busyout journal wakeup-log/ pms-log	WARNING	OFF	release journal wakeup-log|pms-log
257 (b)	0, 3 to 6 255	Link Retry Test (#215)	MINOR/ WARNING[2]	OFF	test journal wakeup-log|pms-log 1
513 (c)	0, 3 to 6 255				test journal wakeup-log|pms-log
769 (d)					

1. Run the Short Test Sequence first. If all tests pass, run the Long Test Sequence. Refer to the appropriate test description and follow the recommended procedures.

   Both PMS Printer and Journal Printer are administered to the same extension, and the printer is not connected. Refer to the "Procedures for Restoring the PMS Printer Link" section for resolution.
2. Minor alarms on this MO may be downgraded to Warning alarms based on the value used in the **set options** command.

Notes:

a. System Technician busied out the Journal Printer Link. The link is torn down. Enter **release** command to restore the link.

b. Link Retry Test (#215) fails. Physical link cannot be set up, usually because of hardware problems such as power off or cable disconnect. The Aux Data field contains the Channel ID of Data Channels on Network Control circuit pack (that is, 3 for Channel 01, 4 for Channel 02, 5 for Channel 03, 6 for Channel 04), an Error Code 255 for the Internal system error, or 0 which indicates that the data module connected to the PMS Printer Link is out-of-service. Refer to "Procedures for Restoring the PMS Printer Link" section for resolution.

c. Physical link cannot be set up, usually because of hardware problems such as power off or cable disconnect. The PMS Printer Link physical link is down due to the following causes: cable to the printer device is disconnected, the printer device is powered off, or the data extension where the printer device connects to has been busied out. The Aux Data field contains the Channel ID of Data Channels on Network Control circuit pack (that is, 3 for Channel 01, 4 for Channel 02, 5 for Channel 03, 6 for Channel 04). Check the connectivity of wire and cable among wall jacket,

data module, and the printer device. Enter **status data <extension>** and verify that the data extension of the printer device is in the in-service/idle state. If the data extension is not available, then refer to the "Procedures for Restoring the PMS Printer Link" section for resolution.

d. Link idle timer; link comes down. This error indicates that the printer device is in an off-line state, for example, paper jam or paper out for a printer device. Check the printer device and act promptly to put it back to on-line state. Enter **test journal wakeup-log|pms-log** command to set up the printer link.

System Technician-Demanded Tests: Descriptions and Error Codes

Always investigate tests in the order presented in the table below when inspecting errors in the system. By clearing error codes associated with the *Link Retry Test*, for example, you may also clear errors generated from other tests in the testing sequence.

Order of Investigation	Short Test Sequence	Long Test Sequence	D/ND[1]
Link Tear Down Test (#213)		X	D
Link Retry Test (#215)	X	X	ND

1. D = Destructive; ND = Nondestructive

Link Tear Down Test (#213)

This test is destructive.

This test disconnects the existing link between the system and the external printer device. If the link has been disconnected already, this test just returns PASS. All resources allocated for a PMS Printer Link are released after this test.

Table 3-245. TEST #213 Link Tear Down Test

Error Code	Test Result	Description/ Recommendation
40	ABORT	Internal system error
50	ABORT	Internal system error 1. Retry the command at 1minute intervals a maximum of 5 times.

Continued on next page

Table 3-245. TEST #213 Link Tear Down Test — *Continued*

Error Code	Test Result	Description/ Recommendation
1010	ABORT	The link has been busied out to out-of-service. 1. Enter **release journal wakeup-log|pms-log** command to release the link from busyout state. 2. Retry **test journal wakeup-log|pms-log l** command to execute the test.
	FAIL	Internal system error 1. Retry the command at 1-minute intervals a maximum of 5 times.
	PASS	The link is torn down.

Link Retry Test (#215)

This test sends a message to the journal printer management software process to make a data call to the extension where the printer device connects to. If the journal printer link is already up, this test passes without making any data call.

Table 3-246. TEST #215 Link Retry Test

Error Code	Test Result	Description/ Recommendation
10	ABORT	Internal system error
20	ABORT	Internal system error 1. Retry the command at 1-minute intervals a maximum of 5 times.
30	ABORT	Internal system error 1. Refer to the "Procedures for Restoring the PMS Printer Link" section for instructions.
1010	ABORT	The PMS Printer Link has been busied out to out-of-service. 1. Enter **release journal wakeup-log|pms-log** command to release the link from busyout state. 2. Retry **test journal wakeup-log|pms-log l** command to execute the test.

Continued on next page

Table 3-246. TEST #215 Link Retry Test — *Continued*

Error Code	Test Result	Description/ Recommendation
	FAIL	The link CANNOT be established. 1. Refer to the "Procedures for Restoring the PMS Printer Link" section for instructions.
	PASS	The link is up.

PR-MAINT (Maintenance Processor)

MO Name (in Alarm Log)	Alarm Level	Initial Command to Run	Full Name of MO
PR-MAINT	MIN[1]	test processor a sh/l	Maintenance Processor

1. Alarms on the PROCR and PR-MAINT maintenance objects are indicated by the red LED on the Processor circuit pack.

The TN798 Processor circuit pack is comprised of the RISC Processor (PROCR), the Maintenance Processor (PR-MAINT), the Memory (PR-MEM), and the I/O Processor (IO-PROCR). PR-MAINT is responsible for monitoring the sanity of the RISC Processor.

PR-MAINT contains the hardware required for controlling the environmental conditions. The Maintenance Processor provides the serial interfaces for the administration terminal and DCE port. The Maintenance Processor also provides the communications interface to INADS for alarm reporting and remote maintenance capability. INADS connectivity is through the external modem, connected to the DCE port.

Error Log Entries and Test to Clear Values

Table 3-247. PR-MAINT Error Log Entries

Error Type	Aux Data	Associated Test	Alarm Level	On/Off Board	Test to Clear Value[1]
0[2]	0	Any	Any	Any	test processor a sh r 1
1(a)	Any	MTP Reset Test (#101)	MIN	ON	test processor a l r 3
257(b)	Any	MTP Sanity Handshake Test (#106)			test processor a r 2
513(c)	Any	MTP Analog Loop Around Test (#103)	MIN	ON	test processor a r 8
769(d)	Any	MTP Dual Port Ram Test (#104)	MIN	ON	test processor a l r 3
1025(e)	Any	MTP Outpulse Relay Test (#102)	MIN	OFF	test processor a r 5
1537(f)	Any	MTP SAT Loop Around Test (#228)	MIN	ON	test processor a r 3
1793(g)	Any	MTP Aux Loop Around Test (#229)	MIN	ON	test processor a r 3

Continued on next page

Table 3-247. PR-MAINT Error Log Entries — *Continued*

Error Type	Aux Data	Associated Test	Alarm Level	On/Off Board	Test to Clear Value[1]
2049(h)	Any	External Modem Present Test (#230)	MIN	OFF	test processor a r 2

1. The MTP Reset Test (#101) logs you off. The MTP Dual Port Ram Test (#104) can also log you off. Manually repeat the command with the ‘‘long’’ option for the designated number of times when testing from the PPN SAT.
2. Run the Short Test Sequence first. If all tests pass, run the Long Test Sequence. Refer to the appropriate test description and follow the recommended procedures.

Notes:

a. The MTP Reset Test (#101) has failed.

b. The MTP Sanity Handshake Test (#106) has failed.

c. The MTP Analog Loop Around Test (#103) has failed.

d. The MTP Dual Port Ram Test (#104) has failed. An error of 769 with an aux data of 5 indicates a hardware problem and testing cannot clear it. Replace the circuit pack.

e. The MTP Outpulse Relay Test (#102) has failed.

f. The MTP SAT Loop Around Test (#228) has failed.

g. The MTP Aux Loop Around Test (#229) has failed.

h. The External Modem Present Test (#230) has failed.

NOTE:
Refer to the FAIL section of each test that fails for further instructions.

System Technician-Demanded Tests: Descriptions and Error Codes

Always investigate tests in the order presented in the table below. By clearing error codes associated with the *MTP Reset Test,* for example, you may also clear errors generated from other tests in the testing sequence.

Order of Investigation	Short Test Sequence	Long Test Sequence	D/ND[1]
Processor Cache Test (#895)(a)		X	ND
Processor Cache Audit (#896)(a)	X	X	ND
Processor Bus Time-out Exception Test (#82)(a)	X	X	ND
Processor BOOTPROM Checksum Test (#80)(a)	X	X	ND
Processor Write Buffer Test (#900)(a)	X	X	ND
Memory Burst Read Test (#908)(a)	X	X	ND
Read All Memory Test (#85)(a)		X	ND
Memory Parity Error Detection Test (#87)(a)	X	X	ND
Flash Memory Checksum Test (#86)(a)		X	ND
Memory Functional Test (#332) (b)(c)		X	D
MTP Outpulse Relay Test (#102)(d)	X	X	ND
External Modem Present Test (#230)(d)	X	X	ND
MTP Analog Loop Around Test (#103)(d)	X	X	ND
MTP Sanity Handshake Test (#106)	X	X	ND
MTP SAT Loop Around Test (#228)	X	X	ND
MTP Aux Loop Around Test (#229)	X	X	ND
MTP Reset Test (#101)		X	D
MTP Dual Port Ram Test (#104)		X	D

1. D = Destructive; ND = Nondestructive

Notes:

a. Refer to "PROCR (RISC Processor Circuit Pack TN798)" for a description of these tests.

b. Refer to "PR-MEM (RISC Memory)" for a description of these tests.

c. The test is run only via a **reset system 4** command or a **reset system 5** command.

d. This test aborts if an external modem is not administered.

MTP Reset Test (#101)

This test is destructive.

The test resets the Maintenance Processor. The destructive nature of this test causes the following:

- System Access Terminal (SAT) logs off
- DCE (modem) port terminates data transmission
- Terminates current memory card access
- Tears down any remote access connection

Table 3-248. TEST #101 MTP Reset Test

Error Code	Test Result	Description/ Recommendation
100	ABORT	The requested test did not complete within the allowable time period. 1. Retry the command.
2500	ABORT	Internal system error 1. Retry at 1-minute intervals a maximum of 5 times.
1196	FAIL	The MTP did not respond to being reset. 1. Retry at 1-minute intervals a maximum of 5 times. 2. If the test continues to fail, replace the Processor circuit pack.
1197	FAIL	The Maintenance Processor was reset, but it responded with a NOT PASS status, indicating that it did not pass initialization correctly. The MTP is not functioning correctly. The system continues to function, but environmental monitoring is lost. 1. Retry at 1-minute intervals a maximum of 5 times. 2. If test continues to fail, replace the Processor circuit pack.
	PASS	The Maintenance Processor was reset, and it passed initialization correctly. The other MTP tests should be examined to verify that the MTP is functioning correctly. 1. Enter **test processor a** and verify that the MTP is functioning correctly.

MTP Outpulse Relay Test (#102)

This test is nondestructive. If the external modem is administered, the MTP sends an AT command sequence that causes the external modem to go off-hook and wait for dial-tone. If the modem detects dial-tone, the test passes. This test is not allowed if the remote access line is in use.

Table 3-249. TEST #102 MTP Outpulse Relay Test

Error Code	Test Result	Description/ Recommendation
100	ABORT	The test did not complete within the allowable time period. 1. Retry the command.
1018	ABORT	The test has been disabled via administration. 1. To enable the test, issue the **change system-parameters maintenance** command, and set the `Test Remote Access Port?` field to **y**. (If you have an INADS line, set the field to **y**. 2. Rerun the test.
1131	ABORT	INADS port is busy because the system is reporting alarms to INADS or because INADS is dialed into the system. 1. If INADS is communicating with the switch the INADS trunk is working. There is no need to run this test. 2. Wait until the INADS session is terminated and then re-enter the command.
1000	ABORT	System software resources required for this test are not available. 1. Retry at 1-minute intervals a maximum of 5 times.
1049	ABORT	External modem is not administered.
1050	ABORT	System could not determine if the testing of the INADS port is administered. 1. Enter the **change system-parameters maintenance** command. Verify that the `Test Remote Access Port?` field is set to `y`. 2. Retry the command at 1-minute intervals a maximum of 5 times.
2500 2033		Internal system error Could not send MTP message. 1. Retry at 1-minute intervals a maximum of 5 times.

Continued on next page

Table 3-249. TEST #102 MTP Outpulse Relay Test — *Continued*

Error Code	Test Result	Description/ Recommendation
2000	ABORT	MTP did not respond to the test request. 1. Repeat the test at 1-minute intervals a maximum of 5 times. 2. If all MTP tests are aborting, execute the **test processor a long** command in order to reset MTP and to examine the results of the MTP Reset Test (#101). 3. Replace the Processor circuit pack. 4. If only the MTP outpulse relay test is aborting, escalate the problem.
	FAIL	MTP reported test failure. No loop current detected. 1. Retry at 1-minute intervals a maximum of 5 times. 2. If Test #230 failed, use the external modem recommendations listed in Test #230. If Test #230 passes, the MTP most likely received a NO DIAL TONE response to the ATD command sent from the MTP. This problem is between the modem and the INADS trunk. 3. Examine the INADS trunk for connectivity and manually check for loop current. 4. If there is no INADS trunk, this test should be disabled. To disable the test, issue the **change system-parameters maintenance** command, and change the `Test Remote Access Port?` field to **n**. 5. If the INADS trunk checks out okay, but the test still fails, check the backplane connector wiring. 6. If the backplane wiring checks out okay, replace the Processor circuit pack.
	PASS	MTP detected a loop current on the remote access port. 1. If the system cannot call INADS, or INADS cannot contact the system, check with the local Central Office for problems with the INADS trunk, and verify that the INADS number is correct. Approved external modems with factory default settings are expected to work if administered correctly using the **change system-parameters** command.

MTP Analog Loop Around Test (#103)

This test is a nondestructive test. The test loops back on the INADS line, and test data is sent through the modem out toward the INADS trunk. The data is looped around before the actual trunk, and it comes back into the modem. The data is then verified for integrity.

NOTE:
The test does not send any data onto the INADS trunk. However, to pass, the test does require the trunk to be present

Table 3-250. TEST #103 MTP Analog Loop Around Test

Error Code	Test Result	Description/ Recommendation
100	ABORT	The test did not complete within the allowable time period. 1. Retry the command.
1000	ABORT	System software resources required for this test are not available. 1. Retry at 1-minute intervals a maximum of 5 times.
1018	ABORT	The test has been disabled via administration. 1. To enable the test, issue the **change system-parameters maintenance** command, and set the Test Remote Access Port field to "y." 2. Rerun the test.
1049	ABORT	External modem is not administered.
1050	ABORT	System could not determine if the testing of the INADS port is administered. 1. Enter **change system-parameters maintenance** command, and verify that the `Test Remote Access Port?` field is set to **y**. 2. Retry at 1-minute intervals a maximum of 5 times.
1131	ABORT	INADS port is busy because the system is reporting alarms to INADS, or because INADS is dialed into the system. 1. If INADS is communicating with the switch the INADS trunk is working. There is no need to run this test. 2. Or if required. Wait about ten minutes (until the INADS session is terminated) and then re-enter the command.
1000 2033	ABORT	System software resources required to run this test are not available. Internal system error 1. Retry at 1-minute intervals a maximum of 5 times.
2000	ABORT	MTP did not respond to the test request. 1. Repeat test at 1-minute intervals a maximum of 5 times. 2. If only the MTP Analog Loop Around Test is aborting, escalate the problem. 3. If all MTP tests are aborting, execute the **test processor a long** command in order to reset MTP, and examine the results of the MTP Reset Test (#101).

Continued on next page

Table 3-250. TEST #103 MTP Analog Loop Around Test — *Continued*

Error Code	Test Result	Description/ Recommendation
2500	ABORT	Internal system error Repeat the command at 1-minute intervals a maximum of 5 times.
	FAIL	MTP reported test failure. The system is not able to reliably contact INADS with alarm data. However, the system continues to provide good service. 1. Check the power to the modem. 2. Check the RS-232 cable connections from the DCE terminal on the switch to the DTE connector on the modem. Transmit, Receive, RTS, and CTS signals must be communicating between the MTP DUART hardware and the modem hardware 3. The MTP DUART or related circuitry on the TN798 Processor circuit pack may have failed. The circuit pack should be changed at your convenience.
	PASS	The test detected correct data through the loopback in the MTP DUART hardware ahead of the RS232 connection to the modem, and received a clear-to-send (CTS) signal from the external modem. 1. If the system cannot call INADS, or if INADS cannot contact the system, check with the local Central Office for problems with the INADS trunk, and verify that the INADS number is correct.

MTP Dual Port Ram Test (#104)

This test is destructive.

The test terminates any PPN SAT session, and it is a coordinated test of the MTP dual port ram (DPR). The DPR is a section of memory that is shared by the MTP and by the RISC Processor circuit pack. Control messages and data are passed through the DPR. The test forces both sides to read and write the DPR simultaneously in alternate locations.

The DPR test causes the PPN SAT to log off before the test result is displayed. The test result is determined according to the terminal from which the test is run. If the test is run from the PPN SAT, system technician should log back in and examine the Error Log for an error against PR-MAINT, with Error Type 769, no Aux Data. This error entry indicates that the MTP DPR Test failed and that the Processor circuit pack should be replaced.

NOTE:
If the test is being run from a terminal other than the PPN SAT (for example, remote access, etc.), the test results are displayed on the screen.

NOTE:
A dial-up (through the INADS port) does not display the results discussed in the previous paragraph. However, a dial-up through data channels does display these results.

Table 3-251. TEST #104 MTP Dual Port Ram Test

Error Code	Test Result	Description/ Recommendation
100	ABORT	The test did not complete within the allowable time period. 1. Retry the command.
1000	ABORT	System software resources required for this test are not available. 1. Retry at 1-minute intervals a maximum of 5 times.
2000	ABORT	The response to the test request was not received within the allowable time period.
2028	ABORT	System software resources required for this test are not available.
2029	ABORT	Internal system error 1. Retry at 1-minute intervals a maximum of 5 times.
	FAIL	The dual port RAM is not functioning correctly. Communication between the processor and MTP is lost. The system is not able to report environmental alarms, or reboot, if necessary. 1. Retry at 1-minute intervals a maximum of 5 times. 2. If the test continues to fail, replace the Processor circuit pack.
	PASS	Dual port RAM is functioning. Communication exists between the Processor circuit pack and the MTP.

MTP Sanity Handshake Test (#106)

This test is a nondestructive test. The MTP Sanity Handshake Test is simply a query from a maintenance process to the MTP. The MTP must reply for the test to pass.

Table 3-252. TEST #106 MTP Sanity Handshake Test

Error Code	Test Result	Description/ Recommendation
100	ABORT	The test did not complete within the allowable time period. 1. Retry the command.
1000	ABORT	System software resources required for this test are not available. 1. Retry at 1-minute intervals a maximum of 5 times.
2000	ABORT	The response to the test request was not received within the allowable time period.
2033	ABORT	Internal system error. 1. Repeat the command at 1-minute intervals a maximum of 5 times.
	FAIL	The MTP did not respond to the Sanity Handshake Query. 1. Re-enter command with the ‘‘long’’ option. 2. If the test continues to fail, replace the Processor circuit pack.
	PASS	The MTP responded to the Sanity Handshake Query.

MTP SAT Loop Around Test (#228)

This test is a nondestructive test. The test places the SAT channel into a loop around mode to verify the data integrity of the channel. Although the test is nondestructive, it causes loss of keyboard input from the SAT.

Table 3-253. TEST #228 MTP SAT Loop Around Test

Error Code	Test Result	Description/ Recommendation
100	ABORT	The test did not complete within the allowable time period. 1. Retry the command.
1000	ABORT	System software resources required for this test are not available.
2000	ABORT	The response to the test request was not received within the allowable time period.
2033 2034	ABORT	Internal system error 1. Retry at 1-minute intervals a maximum of 5 times.

Continued on next page

Table 3-253. TEST #228 MTP SAT Loop Around Test — *Continued*

Error Code	Test Result	Description/ Recommendation
	FAIL	The SAT channel failed the Loop Back Test. The SAT is probably unusable for administration or maintenance. 1. Retry at 1-minute intervals a maximum of 5 times. 2. If the test continues to fail, replace the Processor circuit pack.
	PASS	The SAT channel passed the Loop Back Test. 1. If the SAT is not usable, check the SAT itself, along with the cabling.

MTP Auxiliary Loop Around Test (#229)

This test is a nondestructive test. The test places the Auxiliary channel of the MTP into a loop around mode, and it verifies the data integrity of the channel. The Auxiliary channel is used as the CDR output port

Table 3-254. TEST #229 MTP Auxiliary Loop Around Test

Error Code	Test Result	Description/ Recommendation
100	ABORT	The test did not complete within the allowable time period. 1. Retry the command.
1000	ABORT	The system software resources required for this test are not available. 1. Repeat the command at 1-minute intervals a maximum of 5 times.
1018	ABORT	The test has been disabled via administration. The **change system-parameters cdr** command needs to administer CDR.
2000	ABORT	Response to the test request was not received within the allowable time period
2033		Internal system error
2034		Port busy 1. Repeat the command at 1-minute intervals a maximum of 5 times.
2500	ABORT	The system software resources required for this test are not available. 1. Retry at 1-minute intervals a maximum of 5 times.

Continued on next page

Table 3-254. TEST #229 MTP Auxiliary Loop Around Test — *Continued*

Error Code	Test Result	Description/ Recommendation
	FAIL	The Auxiliary channel failed the Loop Back Test. The AUX port may not be sending any auxiliary data to the auxiliary collection device. 1. Repeat the command at 1-minute intervals a maximum of 5 times. 2. If test continues to fail, replace the Processor circuit pack.
	PASS	The Auxiliary channel passed the Loop Back Test. The auxiliary port is functioning correctly. 1. If no auxiliary data is being recorded, check the auxiliary collection device, and verify that it has been set up and connected correctly.

MTP External Modem Present Test (#230)

This test is a nondestructive test to test the presence of an external modem, and runs only if the channel is idle. The test passes if the modem responds with “OK” to the AT command.

Table 3-255. TEST #230 External Modem Present Test

Error Code	Test Result	Description/ Recommendation
100	ABORT	The test did not complete within the allowable time period. 1. Retry the command.
1018	ABORT	The test has been disabled via administration. 1. To enable the test, issue the **change system-parameters maintenance** command, and set the `Test Remote Access Port` field to **y**. 2. Rerun the test.
1131	ABORT	INADS port is busy because the system is reporting alarms to INADS, or because INADS is dialed into the system. 1. If INADS is communicating with the switch the INADS trunk is working. There is no need to run this test. 2. Or if required. Wait about ten minutes (until the INADS session is terminated) and then re-enter the command.

Continued on next page

Table 3-255. TEST #230 External Modem Present Test — *Continued*

Error Code	Test Result	Description/ Recommendation
1000 2033	ABORT	System software resources required for this test are not available. Internal system error 1. Retry at 1-minute intervals a maximum of 5 times.
1049	ABORT	External Modem is not administered.
1050	ABORT	System could not determine if the testing of the INADS port is administered. 1. Enter the **change system-parameters maintenance** command, and verify the entry for the `Test Remote Access Port` field. 2. Retry at 1-minute intervals a maximum of 5 times.
2000	ABORT	MTP did not respond to the test request. 1. Repeat test at 1-minute intervals a maximum of 5 times. 2. If all MTP tests are aborting, execute the **test processor a long** command in order to reset MTP, and examine the results of the MTP Reset Test (#101).
2500	ABORT	Internal System software Error 1. Retry at 1-minute intervals a maximum of 5 times.
	FAIL	MTP reported test failure. The system is not able to reliably contact INADS with alarm data. However, the system continues to provide good service. The MTP did not receive an “OK” response after sending the AT command to the modem. 1. If test #103 failed, follow the external modem recommendations for that test failure. 2. If Test #103 passes: a. Check the RS-232 connections from the DCE terminal on the switch to the DTE terminal on the modem. RTS and CTS signals are being communicated between the MTP DUART hardware and the modem hardware. Transmit and receive signals may not be communicated correctly. b. Check the modem administration using the **change system-parameters maintenance** command, especially changes from default parameters. c. Check the modem settings, especially changes from factory defaults. **CAUTION:** *The fault may be on the Processor circuit pack. The circuit pack should be replaced.*

Continued on next page

Table 3-255. TEST #230 External Modem Present Test — *Continued*

Error Code	Test Result	Description/ Recommendation
	PASS	MTP detected correct data from the external modem. The MTP received an “OK” response after sending the AT command to the modem. 1. If the system cannot call INADS, or if INADS cannot contact the system, check with the local Central Office for problems with the INADS trunk, and verify that the INADS number is correct. If an external modem is being used instead of the internal MTP modem, modem settings may be wrong. Approved external modems with factory default settings are expected to work if administered correctly using the **change system-parameters maintenance** command.

PR-MEM (RISC Memory)

MO Name (in Alarm Log)	Alarm Level	Initial Command to Run	Full Name of MO
PR-MEM[1]	MAJOR	test memory a lo c	RISC Memory
PR-MEM[1]	MINOR	test memory a sh c	RISC Memory

1. The MO is ‘‘PR-MEM’’ because all of the Memory used by the Processor is on the TN798 Processor circuit pack.

The RISC Memory contains the DEFINITY software and firmware. The Processor circuit pack is the most critical component in the system.

For testing purposes, the circuit pack is logically separated into PR-MAINT, PROCR, and PR-MEM. This means that a memory problem requires that the Processor be replaced. These systems contain two types of memory: Flash ROM and DRAM. Flash ROM is memory that contains the boot image, part of the low-level maintenance firmware, and PI firmware. This type of memory is not erased during circuit pack resets. It can be reprogrammed via the **upgrade software** command or a Reset System 4/5 using a software memory card.

One section of the Flash ROM (BOOTPROM) containing the system initialization functions and the low-level diagnostic programs is programmed at the factory and is not reprogrammed by the **upgrade software** command. DRAM is used for software data storage, and it changes constantly. Both types of memory are present on the Processor circuit pack. The diagnostics run appropriate tests on both memories.

For all system activity, the Processor must be able to access the Memory. If the Processor cannot do this, the system goes into SPE-down mode. In SPE-down mode, fatal Memory errors may show up as Processor errors. This merely indicates that the Processor and the Memory are very closely linked as a matter of course.

If the initialization diagnostics fail, refer to the ‘‘Procedure for SPE-Down Mode’’ section in Chapter 1, ‘‘Maintenance for R6csi Compact Modular Cabinets’’.

Error Log Entries and Test to Clear Values

Table 3-256. Memory Error Log Entries

Error Type	Aux Data	Associated Test	Alarm Level	On/Off Board	Test to Clear Value
0[1]	0	Any	Any	Any	test memory a l r 1
1	Any	Flash Memory Checksum Test (#86)	MAJOR	ON	test memory a l r 5
3(a)	Any	Flash Memory Checksum Test (#86)	MAJOR	ON	test memory a l r 5
1025	Any	Memory Parity Error Detection Test (#87)	MINOR	ON	test memory a r 3
1281	Any	Memory Burst Read Test (#908)	MAJOR	ON	test memory a l r 2
1793	Any (b)(c)	Read All Memory (#85)	MAJOR	ON	test memory a l r 1
2049(d)	Any (b)(c)	Memory Functional Test (#332)	MAJOR	ON	test memory a l r 1

1. Run the Short Test Sequence first. If all tests pass, run the Long Test Sequence. Refer to the appropriate test description and follow the recommended procedures.

Notes:

a. This error (3) indicates that a software patch has been applied and either the software patch is bad or was installed incorrectly.

   1. Back out the software patch and run the **test memory a long** command to verify that the problem has been cleared.

b. The Aux Data indicate SIMM Failures.

c. Aux Data of 100 is an LMM Flash Checksum initialization failure.

d. There are Functional Memory Test errors against the Processor circuit pack. This test is run only via a **reset system 4** command or a **reset system 5** command.

System Technician-Demanded Tests: Descriptions and Error Codes

Always investigate errors in the order in which they are presented in the table that follows when you are inspecting errors in the system. By clearing error codes associated with the *Read All Memory Test,* for example, you may also clear errors generated from other tests in the testing sequence.

Order of Investigation	Short Test Sequence	Long Test Sequence	D/ND[1]
Processor Cache Test (#895)(a)		X	ND
Processor Cache Audit (#896)(a)	X	X	ND
Processor Bus Time-out Exception Test (#82)(a)	X	X	ND
Processor BOOTPROM Checksum Test (#897)(a)	X	X	ND
Processor Write Buffer Test (#900)(a)	X	X	ND
Memory Burst Read Test (#908)	X	X	ND
Read All Memory Test (#85)		X	ND
Memory Parity Error Detection Test (#87)	X	X	ND
Flash Memory Checksum Test (#86)		X	ND
Memory Functional Test (#332) (b)		X	D
MTP Outpulse Relay Test (#102) (c)	X	X	ND
MTP External Modem Present Test (#230) (c)	X	X	ND
MTP Analog Loop Around Test (#103) (c)	X	X	ND
MTP Sanity Handshake Test (#106) (c)	X	X	ND
MTP SAT Loop Around Test (#228) (c)	X	X	ND
MTP Aux Loop Around Test (#229) (c)	X	X	ND
MTP Reset Test (#101) (c)		X	D
MTP Dual Port Ram Test (#104) (c)		X	D

1. D = Destructive; ND = Nondestructive

Notes:

a. Refer to "PROCR (RISC Processor Circuit Pack TN798)" for a description of these tests.

b. This test is run only via a **reset system 4** command or a **reset system 5** command.

c. Refer to "PR-MAINT (Maintenance Processor)" for a description of these tests.

Read All Memory Test (#85)

This test is a nondestructive test. The test reads every memory location in memory. A failure of this test indicates a DRAM failure in the Processor circuit pack. DRAM is replaceable and installed in 3 Single Inline Memory Module (SIMM) sockets on this circuit pack.

Table 3-257. TEST #85 Read All Memory Test

Error Code	Test Result	Description/ Recommendation
100	ABORT	The requested test did not complete within the allowable time period. 1. Retry the command.
2500	ABORT	Internal system error 1. Retry the command.
1 - 7	FAIL	If the system can still provide service, this indicates that the Processor circuit pack has a problem with memory or the RISC processor, but can still function. At the customers convenience run the destructive "**reset system 4**" command to boot the system and write to all of the memory locations. This will clear transient parity errors and test for permanent parity errors. This complete memory testing during initialization will cause "SPE DOWN" if a parity error is detected and the PROCR circuit pack should be replaced. If parity errors reoccur within several weeks, record the error code information indicating which memory modules failed, together with the extended interval between failures. After recording the information and at the customers convenience replace the PROCR circuit pack.
	PASS	The Memory is healthy.

Flash Memory Checksum Test (#86)

This test is a nondestructive test. The test computes the checksum of the DEFINITY Generic 3 software and firmware loaded from the Software Memory Card (SOFTWARE MEM-CARD). A failure of this test indicates corruption of the Flash Memory. However, this failure does NOT always indicate a hardware problem. **DO NOT REPLACE** the Processor circuit pack when this is the only error. A system restart via the **reset system 4** command starting with inserting the Software Memory Card for this system followed by re-inserting the Translation Memory Card memory card should be implemented at the customer's earliest convenience.

Table 3-258. TEST #86 Text Checksum Test

Error Code	Test Result	Description/ Recommendation
100	ABORT	The test did not complete within the allowable time period. 1. Retry the command.
2500	ABORT	Internal system error 1. Retry the command.
1 - 7	FAIL	The system may or may not continue to operate correctly. The system may fail later when some action requires access to the corrupted area of the Text. 1. The Flash ROM should be reprogrammed via the **upgrade software** command. The memory card should contain the same vintage software that is currently in the system. 2. If the test continues to fail, replace the Processor circuit pack and repeat step 1.
	PASS	The checksum is correct.

Memory Parity Error Detection Test (#87)

This test is a nondestructive test. The test is run on a few reserved locations in memory. A failure of this test indicates a failure on the Processor circuit pack.

This test determines if the parity circuitry is working. Accordingly, the test determines if parity errors can be detected. The parity circuitry is used to detect DRAM memory failures.

Table 3-259. TEST #87 Memory Parity Error Detection Test

Error Code	Test Result	Description/ Recommendation
100	ABORT	The test did not complete within the allowable time period. 1. Retry the command.
2500	ABORT	Internal system error 1. Retry the command.

Continued on next page

Table 3-259. TEST #87 Memory Parity Error Detection Test — *Continued*

Error Code	Test Result	Description/ Recommendation
1 - 7	FAIL	The parity detection circuitry is not working correctly. If the system can still provide service, this indicates that the Processor circuit pack has a problem but can still function. 1. The Processor circuit pack should be replaced. The failure is identifying the PROCR as being bad and only the PROCR circuit pack needs to be replaced.
	PASS	The parity detection circuitry is working.

Memory Functional Test (#332)

This test is destructive.

This test ensures that every DRAM memory location can be accessed and changed independently. Running this test wipes out all data in DRAM memory. This test is performed during a **reset system 4** or **reset system 5**. If the test fails during a **reset system** command, refer to the "Procedure for SPE-Down Mode" in Chapter 1, "Maintenance for R6csi Compact Modular Cabinets" for the recommended maintenance strategy.

Table 3-260. TEST #332 Memory Functional Test

Error Code	Test Result	Description/ Recommendation
100	ABORT	The test did not complete within the allowable time period. 1. Retry the command.
1000	ABORT	System resources required to run this test are not available. 1. Retry the command at 1-minute intervals a maximum of 3 times.
	PASS	The DRAM is healthy.

Memory Burst Read Test (#908)

This test verifies that the Memory Burst Read function works properly on the Processor circuit pack.

Table 3-261. TEST #908 Memory Burst Read Test

Error Code	Test Result	Description/ Recommendation
100	ABORT	The test did not complete within the allowable time period. 1. Retry the command.
1022 1335 2500	ABORT	Internal system error 1. Retry the command.
1 - 7	FAIL	The Burst Read circuit is not functioning properly. 1. If the test fails, replace the Processor and retry the test.
	PASS	The Burst Read portion of the Processor circuit pack is operating correctly.

PRI-CDR/SEC-CDR (PRI-CDR Link)

MO Name (in Alarm Log)	Alarm Level	Initial Command to Run	Full Name of MO
PRI-CDR/SEC-CDR	MINOR	test cdr-link primary/secondary l	CDR Link
PRI-CDR/SEC-CDR	WARNING	test cdr-link primary/secondary	CDR Link

The CDR feature records detailed call information on all incoming and outgoing calls on specified trunk groups and sends this information to an CDR output device. The two physical links can be administered for connecting external CDR output devices to the system. They are identified as the primary CDR (PRI-CDR) link and the secondary CDR (SEC-CDR) link. The CDR link can be administered to a data extension or the EIA port on the TN798 Processor circuit pack that provides a standard EIA-232C interface. The external CDR output devices are:

- 94A Local Storage Unit (LSU)
- TELESEER CDR Unit
- Call Accounting System (CAS)
- Call Detail Recording Unit (CDRU)
- Printer
- Host computer
- Personal computer (PC)
- Customer-provided equipment

Refer to *DEFINITY Enterprise Communications Server Release 6 Administration and Feature Description*, for details of the CDR feature.

CDR Link Maintenance provides a strategy for maintaining the link between the system and an external CDR output device. The strategy includes a set of tests for periodic diagnosis, detection of errors during normal operation, actions for troubleshooting, and raising alarms for serious problems. CDR Link Maintenance uses a try-and-wait mechanism for maintaining the CDR link. If the CDR link is torn down due to an error, CDR Link Maintenance intends to bring the CDR link up. If the Link Setup trial fails, CDR Link Maintenance waits 30 seconds before the next retry. If the number of retries reaches the value of a threshold (two), a Minor alarm is raised for service attention.

The following physical configurations are supported for the CDR link:

- From the EIA port of Processor circuit pack to an CDR output device through the standard EIA-232C interface.
- From a data channel on the TN798 Processor circuit pack to a data extension where the CDR output device connects via the standard EIA 232C interface.

The data extension can be a PDM, MPDM, DTDM, or ADU. The PDM, MPDM, and DTDM connect to a Digital Line Port of TN754 or TN754B Digital Line circuit pack; ADU connects to a Data Line Port of TN726 Data Link circuit pack.

NOTE:
In duplicated systems it is possible for a failure on one of the processor circuit packs to bring down the CDR link even if it is the standby processor. This problem can not be resolved by interchanging processors because the CDR ports on each of the processor circuit packs are connected via WIRE-OR.

CDR Link Maintenance does not cover the maintenance of the elements composing the CDR physical link, which are as follows:

- External CDR output device
- EIA port on Processor circuit pack
- Data Module (PDM/MPDM/DTDM) and Digital Line Port of TN754 or TN754B Digital Line circuit pack
- ADU and Data Line Port of TN726 Data Link circuit pack
- Data Channels on the TN798 Processor circuit pack

If CDR Link Maintenance cannot restore the CDR link, then the maintenance tests of these individual components of the CDR link must be executed to diagnose faults.

Procedures for Restoring the CDR Link

1. Get the status of CDR links.

   Enter **status cdr-link** command and make sure that the CDR links are not busied out for maintenance. If the link is down, then continue to the next step.

2. Where does the CDR link connect to?

   Enter **display system feature** and find out the destinations of CDR links. Continue to the next step.

3. Is the destination an extension or the EIA port?

   If the destination is an extension number, then enter the **status data extension** command and verify whether the data extension is in the in-service/idle state. If the data extension is NOT available, then look for the extension number in the `Alt Name` field of Hardware Error Log and refer to "XXX-BD (Common Port Circuit Pack)" Maintenance documentation for resolutions.

If the destination is "eia," then look for PR-MAINT errors in the Hardware Error Log. If present, refer to "PR-MAINT (Maintenance Processor)" Maintenance documentation.

4. Is a data channel on the TN798 Processor circuit pack in the in-service/idle state?

   Enter **list data** command and find out the extension numbers of data channels. Enter **status data extension** command and make sure that at least one data channel is in the in-service/idle state. If no data channel is available, then look for DATA-CHL/DATA-CON/DATA-BD errors in the Hardware Error Log. If present, refer to "DATA-BD (Data Channel Processor Circuit Pack)".

5. Is the external CDR output device available?

   Make sure that the CDR output device is on-line and ready for service. Check the physical connectivity between Data Module and the CDR output device or between the EIA port on backplane of the switch and the CDR output device.

It is recommended to busy out the CDR link before executing maintenance tests over the CDR link. If the CDR link is busied out, then all CDR link maintenance actions are deactivated. The interference to tests of other MO is off.

Error Log Entries and Test to Clear Values

Table 3-262. CDR Link Maintenance Error Log Entries

Error Type	Aux Data	Associated Test	Alarm Level	On/Off Board	Test to Clear Value[1]
0[2]	0	Any	Any	Any	test cdr-link primary|secondary sh
18 (a)	0	busy out cdr	WARNING	OFF	release cdr-link primary|secondary
		primary | secondary			
25 (b)	0 3 to 6 9 99 255	Link Retry Test (#215)	MINOR/ WARNING[3]	OFF	test cdr-link primary|secondary l
513 (c)	0 3 to 6 9				test cdr-link primary|secondary

Continued on next page

Table 3-262. CDR Link Maintenance Error Log Entries — *Continued*

Error Type	Aux Data	Associated Test	Alarm Level	On/Off Board	Test to Clear Value[1]
1025 (d)					
1281 (e)					

1. The MTP Reset Test (#101) logs you off. The MTP Dual Port Ram Test (#104) can also log you off. Manually repeat the command with the ‘‘long’’ option for the designated number of times when testing from the PPN SAT.
2. Run the Short Test Sequence first. If all tests pass, run the Long Test Sequence. Refer to the appropriate test description and follow the recommended procedures.
3. Minor alarms on this MO may be downgraded to Warning alarms based on the value used in the **set options** command.

Notes:

a. System Technician has busied out the CDR link to out-of-service state. The CDR link is torn down.

b. Link Retry Test (#215) fails. The Aux Data field contains either the Channel ID of Data Channels on the TN798 Processor circuit pack (that is, 3 for Channel 01, 4 for Channel 02, 5 for Channel 03, 6 for Channel 04, and 9 for EIA port) or an Error Code of 99 indicating that no data channels are available for setting up the link, or an Error Type of 255 indicating an internal system error. Refer to the preceding ‘‘Procedures for Restoring the CDR Link’’ for resolution.

c. The CDR physical link is down due to the following causes: cable to the CDR output device is disconnected; CDR output device is powered off, the data extension where the CDR output device connects to has been busied out or there is a scheduled daily interchange. The Aux Data field contains the Channel ID of Data Channels on the TN798 Processor circuit pack (that is, 3 for Channel 01, 4 for Channel 02, 5 for Channel 03, 6 for Channel 04, and 9 for EIA port). Check the connectivity of wire and cable among wall jacket, data module, and the CDR output device. Enter **status data extension** and verify that the data extension of the CDR output device is in the in-service/idle state. If the data extension is not available, then refer to the preceding ‘‘Procedures for Restoring the CDR Link’’ for resolution. Issue the **display system-parameters-maintenance** command to see the start time of daily maintenance. If the error occurs and is resolved during the interval of daily maintenance, then the error can be ignored.

d. This error indicates that the CDR output device is in an off-line state, for example, paper jam or paper out for a printer device. The CDR link is torn down. Check the CDR output device and act promptly to put it back to on-line state. Enter **test cdr-link primary|secondary** command to set up the CDR link.

e. Software detects an overflow of CDR records generated in the switch due to the heavy trunk traffic and low speed CDR output device. If both primary and secondary links are ON, the secondary link is torn down temporarily for two minutes to speed up the output process to the primary link. No action is necessary for this error type.

System Technician-Demanded Tests: Descriptions and Error Codes

Always investigate tests in the order presented in the table below when inspecting errors in the system. By clearing error codes associated with the *Link Retry Test*, for example, you may also clear errors generated from other tests in the testing sequence.

Order of Investigation	Short Test Sequence	Long Test Sequence	D/ND[1]
Link Tear Down Test (#213)		X	D
Link Retry Test (#215)	X	X	ND

1. D = Destructive; ND = Nondestructive

Link Tear Down Test (#213)

This test is destructive.

This test disconnects the existing link between the system and the external CDR output device. If the link has been disconnected already, this test just returns PASS. All resources allocated for an CDR link are released after this test.

Table 3-263. TEST #213 Link Tear Down Test

Error Code	Test Result	Description/ Recommendation
40	ABORT	Internal system error
50	ABORT	Internal system error 1. Retry the command at 1-minute intervals a maximum of 5 times.
1010	ABORT	The CDR link has been busied out to out-of-service. 1. Enter the **release cdr-link primary|secondary** command to release the CDR link from busyout state. 2. Retry the **test cdr-link primary|secondary long** command to execute the test.
	FAIL	Internal system error 1. Retry the command at 1-minute intervals a maximum of 5 times.
	PASS	The CDR link is torn down.

Link Retry Test (#215)

This test sends a message to the CDR software process to make a data call to the extension where the CDR output device connects to or opens the EIA port to the CDR output device. If the CDR link is already up, this test is passed without making any data call or opening the EIA port.

Table 3-264. TEST #215 Link Retry Test

Error Code	Test Result	Description/ Recommendation
10	ABORT	Internal system error
20	ABORT	Internal system error. Internal error in Maintenance Action Process (MAP). MAP returns an error back to maintenance script (HMM). Timer expires while waiting for the reply from MAP. 1. Retry the command at 1-minute intervals a maximum of 5 times.
30	ABORT	Internal system error 1. Refer to "Procedures for Restoring the CDR Link".

Continued on next page

Table 3-264. TEST #215 Link Retry Test — *Continued*

Error Code	Test Result	Description/ Recommendation
1010	ABORT	The CDR link has been busied out to out-of-service. 1. Enter **release cdr-link primary|secondary** command to release the CDR link from busyout state. 2. Retry **test cdr-link primary|secondary long** command to execute the test.
	FAIL	The CDR link CANNOT be established. 1. Refer to the "Procedures for Restoring the CDR Link" for instructions.
	PASS	The CDR link is up.

PROCR (RISC Processor Circuit Pack TN798)

MO Name (in Alarm Log)	Alarm Level	Initial Command to Run	Full Name of MO
PROCR	MAJOR	test processor a lo r/c	RISC Processor Circuit Pack
PROCR	MINOR	test processor a sh r/c	RISC Processor Circuit Pack

NOTE:
Alarms on the PR-MEM, PROCR and PR-MAINT maintenance objects (MOs) are indicated by the red LED on the Processor circuit pack.

The TN798 has a RISC processor (PROCR) that uses on-board Flash ROM and DRAM memory (PR-MEM). This circuit pack also contains the Maintenance Processor (PR-MAINT) and IO-PROCR, which includes the I/O Processor CPU, memory, a real-time operating system, and a driver.

The RISC Processor circuit pack portion is responsible for the execution of the DEFINITY Generic 3 software package. This includes all of the call processing, maintenance, and administration functions. The RISC Processor circuit pack is the most critical component to the operation of the system.

The PR-MAINT (Maintenance Processor for RISC systems) is responsible for monitoring the sanity of the RISC Processor circuit pack and the environmental conditions. The PR-MAINT provides the serial interfaces for the SAT and for the Digital Communications Equipment (DCE) ports. The PR-MAINT also provides the communications interface to INADS for alarm reporting and remote maintenance capability. The I/O Processor elements support the Data Channel data scanners and Packet Interface functions. (The I/O Processor resides on the TN798 Processor circuit pack.)

Error Log Entries and Test to Clear Values

Table 3-265. RISC Processor Circuit Pack Error Log Entries

Error Type	Aux Data	Associated Test	Alarm Level	On/Off Board	Test to Clear Value[1]
0[2]	0	Any	Any	Any	test processor a r 1
1(a)	Any	BOOTPROM Checksum Test (#80)	MAJOR	ON	test processor a r 5
513		Processor Write Buffer Test (#900)	MAJOR	ON	test processor a r 1

Continued on next page

Table 3-265. RISC Processor Circuit Pack Error Log Entries — *Continued*

Error Type	Aux Data	Associated Test	Alarm Level	On/Off Board	Test to Clear Value[1]
1025(b)	Any	Processor Cache Audit (#896)	MINOR	ON	test processor a r 2
1281	Any	Processor Cache Test(#895)	MAJOR	ON	test processor a r 1
1793(c)		Processor Bus Time-out Exception Test (#82)	MAJOR	ON	test processor a r 2
2049(d)(e)	Any	Processor Sanity Timer Test	MINOR	ON	test processor a l c

1. The MTP Reset Test (#101) logs you off. The MTP Dual Port Ram Test (#104) can also log you off.
2. Run the Short Test Sequence first. If all tests pass, run the Long Test Sequence. Refer to the appropriate test description and follow the recommended procedures.

Notes:

a. The BOOTPROM Checksum Test (#80) failed. Refer to the FAIL condition of this test for further action.

b. A parity error was detected in the processor's data cache or instruction cache. Aux Data indicates the difference in the number of parity errors since the last report.

c. The Processor Bus Time-out Test (#82) failed. Refer to the FAIL condition of this test for further action.

d. Aux Data of 100 is an LMM initialization failure.

e. The Processor Sanity Timer Test failed during a reset level 4 or 5 initialization. reset system 4 at the customers convenience and if the alarm occurs again, replace the Processor circuit pack. The system runs with this failure, but it is not protected if the system software has a sanity problem. The test processor a long clear command clears this alarm, but the sanity timer is only tested during initialization so the alarm occurs again and the system is not protected against insane software.

System Technician-Demanded Tests: Descriptions and Error Codes

Always investigate tests in the order presented in the table below. By clearing error codes associated with the *Processor Bus Time-out Exception Test,* for example, you may also clear errors generated from other tests in the testing sequence.

Order of Investigation	Short Test Sequence	Long Test Sequence	D/ND[1]
Processor Cache Test (#895)		X	ND
Processor Cache Audit (#896)	X	X	ND
Processor Bus Time-out Exception Test (#82)	X	X	ND
Processor BOOTPROM Checksum Test (#80)	X	X	ND
Processor Write Buffer Test (#900)	X	X	ND
Memory Burst Read Test (#908)(a)	X	X	ND
Read All Memory Test (#85)(a)		X	ND
Memory Parity Error Detection Test (#87)(a)	X	X	ND
Flash Memory Checksum Test (#86)(a)		X	ND
Memory Functional Test (#332) (a) (b)		X	D
MTP Outpulse Relay Test (#102) (c)	X	X	ND
MTP External Modem Present Test (#230) (c)	X	X	ND
MTP Analog Loop Around Test (#103) (c)	X	X	ND
MTP Sanity Handshake Test (#106) (c)	X	X	ND
MTP SAT Loop Around Test (#228) (c)	X	X	ND
MTP Aux Loop Around Test (#229) (c)	X	X	ND
MTP Reset Test (#101) (c)		X	D
MTP Dual Port Ram Test (#104) (c)		X	D

1. D = Destructive; ND = Nondestructive

Notes:

a. Refer to "PR-MEM (RISC Memory)" for a description of these tests.

b. There are Functional Memory Test errors against the Processor circuit pack. This test is run only via a reset system 4 command or a reset system 5 command.

c. Refer to "PR-MAINT (Maintenance Processor)" for a description of these tests.

Processor BOOTPROM Checksum Test (#80)

This test is a nondestructive test. This test computes the checksum of the Processor's bootstrap BOOTPROM. A failure indicates the BOOTPROM is corrupt.

Table 3-266. Test #80 Processor BOOTPROM Checksum Test

Error Code	Test Result	Description/ Recommendation
100	ABORT	The test did not complete within the allowable time period. 1. Retry the command.
2500	ABORT	Internal system error 1. Retry the command.
	FAIL	The computed checksum did not match the BOOTPROM checksum. The system may not continue to operate correctly. The system may fail at some future date when the corrupted area the bootstrap BOOTPROM is accessed. 1. Replace the Processor circuit pack.
	PASS	The computed checksum matched the BOOTPROM checksum. This part of the Processor will continue to operate normally.

Processor Bus Time-out Exception Test (#82)

This test is a nondestructive test. The test is used to verify that the RISC Processor can intentionally cause a Bus Timeout Exception (BTE) and then verifies if it vectors to the correct interrupt routine. This is basically a test of the internal operation of the RISC Processor chip and the bus time-out circuitry.

Table 3-267. Test #82 Processor Bus Time-out Exception Test

Error Code	Test Result	Description/ Recommendation
100	ABORT	The test did not complete within the allowable time period.

Continued on next page

Table 3-267. Test #82 Processor Bus Time-out Exception Test — *Continued*

Error Code	Test Result	Description/ Recommendation
2500	ABORT	Internal system error 1. Retry the command.
	FAIL	The interrupt was not detected or acted upon. 1. Repeat the command at 1-minute intervals a maximum of 5 times. 2. If the test continues to fail, the Processor circuit pack should be replaced. The replacement must have enough memory for this system.
	PASS	The interrupt was correctly detected. The RISC Processor is functioning correctly.

Processor Cache Test (#895)

This test is a nondestructive test. This test overwrites the contents in the Instruction and Data Caches, requiring them to be refilled during normal execution.

This test verifies that the Processor Instruction and Data Caches are functional. Some errors in the caches will simply reduce performance by forcing instructions or data to be read from memory more often than would normally be necessary. In any case, cache problems are serious and the Processor circuit pack must be replaced as soon as possible if they are detected.

Table 3-268. Test #895 Processor Cache Test

Error Code	Test Result	Description/ Recommendation
100	ABORT	The test did not complete within the allowable time period. 1. Retry the command.
2500	ABORT	Internal system error 1. Retry the command.
	FAIL	The Processor cache is not functioning correctly. 1. Replace the Processor circuit pack immediately.
	PASS	The cache portion of the Processor circuit pack is operating correctly.

Processor Cache Audit (#896)

This nondestructive audit checks the state of the Cache Parity bit maintained by the RISC CPU. If this bit is set, there may be problems with either the CPU, the Instruction, or Data Cache. An indication of bad cache parity won't itself mean that the system won't operate, but minor to severe performance degradation may be present. For example, a single bad bit in either cache could cause this bit to be set. If the faulty word is seldom accessed, the impact will be small. If the bit is accessed frequently, there could be serious problems with much, or all, of the cache (stuck data bit) with the only direct indication again being the cache parity error or cache test error.

Table 3-269. Test #896 Processor Cache Audit

Error Code	Test Result	Description/ Recommendation
100	ABORT	The test did not complete within the allowable time period. 1. Retry the command.
2500	ABORT	Internal system error 1. Retry the command.
	FAIL	The Cache Parity Error bit is set, there may be problems with either the CPU or the Instruction or Data Cache. 1. Retry the command. 2. If the test continues to fail, run **test processor a|b long**. 3. If the Processor Cache test (#895) or the Processor Cache Audit (#896) fails, replace the Processor circuit pack.
	PASS	The Processor has not detected any parity errors in the Instruction and Data Caches since the last time this audit was run.

Processor Write Buffer Test (#900)

This test is a nondestructive test. This test verifies that the Write Buffer operates properly on the Processor circuit pack. Failure of this test is serious. The Processor circuit pack must be replaced as soon as possible.

Table 3-270. Test #900 Processor Write Buffer Test

Error Code	Test Result	Description/ Recommendation
100	ABORT	The test did not complete within the allowable time period. 1. Retry the command.
2500	ABORT	Internal system error 1. Retry the command.
	FAIL	The Processor Write Buffer is not operating correctly. 1. Replace the Processor circuit pack immediately.
	PASS	The Write Buffer portion of the Processor circuit pack is operating correctly.

PROC-SAN (Process Sanity Audits)

MO Name (in Alarm Log)	Alarm Level	Initial Command to Run	Full Name of MO
PROC-SAN	none	none	Process Sanity Audits

The Process Sanity Audits MO is responsible for monitoring the sanity of software processes in the system. If the Process Sanity Audits MO detects that a process has gone insane (does not respond to a sanity message within an allotted time period), the process is restarted. If the Process Sanity Audits MO detects that multiple processes (or a single key process) do not respond to sanity messages within an allotted time period, a system recovery action is initiated.

The Process Sanity Audits MO has no alarms and no tests. Certain errors are logged to the Hardware Error Log for information purposes only.

Error Log Entries and Test to Clear Values

Table 3-271. Process Sanity Audits Error Log Entries

Error Type	Aux Data	Associated Test	Alarm Level	On/Off Board	Test to Clear Value
0[1]	0	Any	Any	Any	none
10 (a)	0	none	none	none	none
204 (a)	any	none	none	none	none

1. Look for other errors of the same type and deal with them accordingly.

Notes:

a. These errors indicate that a system recovery action has been taken because one or more software processes failed to respond to a sanity audit in a timely fashion. As a result of the recovery action, the system may have temporarily suspended service for a period of time surrounding the error.

RING-GEN (Analog Ring Generator)

MO Name (in Alarm Log)	Alarm Level	Initial Command to Run[1]	Full Name of MO
RING-GEN	MAJOR	test environment P	Analog Ring Generator

1. Where P is an appropriate port network number determined via the Port field from the Alarm or Error Log.

All analog phones must be provided with a ringing voltage. The Analog Ring Generator is part of the 650A AC Power Supply. A ringing voltage generator failure means that no ringing can occur on analog phones; however, ringing on digital and hybrid phones can still occur. The ringing voltage is monitored by the Tone-Clock circuit pack.

Hardware Error Log Entries and Test to Clear Values

Analog Ring Generator Error Log Entries

Error Type	Aux Data	Associated Test	Alarm Level	On/Off Board	Test to Clear Value
0[1]	0	Any	Any	Any	test environment PP
1		Analog Ring Generator Query Test (#118)	MAJOR	ON	test environment PP r 3

1. Run the Short Test Sequence first. If all tests pass, run the Long Test Sequence. Refer to the appropriate test description and follow the recommended procedures.

System Technician-Demanded Tests: Descriptions and Error Codes

Always investigate tests in the order presented in the following tables when inspecting errors in the system. By clearing error codes associated with the *Analog Ring Generator Initialization Test*, for example, you may also clear errors generated from other tests in the testing sequence.

Order of Investigation	Short Test Sequence	Long Test Sequence	D/ND[1]
Analog Ring Generator Initialization Test (#117)	X	X	ND
Analog Ring Generator Query Test (#118)	X	X	ND

Continued on next page

Order of Investigation	Short Test Sequence	Long Test Sequence	D/ND[1]
Single-Carrier Power Query Test (#79)	X	X	ND
Emergency Transfer Query Test (#124) (a)	X	X	ND
External Alarm Lead Query Test (#120) (b)	X	X	ND

1. D = Destructive; ND = Nondestructive

Notes:

a. Refer to EMG-XFER (Emergency Transfer) Maintenance documentation for a description of this test.

b. Refer to EXT-DEV (External Alarm) Maintenance documentation for a description of this test.

Analog Ring Generator Initialization Test (#117)

This test reports an error to the system software if the ringing voltage falls to low (only if system software has made a request to the tone clock to monitor the voltage). The Analog Ring Generator Initialization Test sends a request to the active tone/clock.

Table 3-272. TEST #117 Analog Ring Generator Initialization Test

Error Code	Test Result	Description/ Recommendation
1 1000 1001 1003 1115 2012 2100	ABORT	The system software is unable to determine the active tone/clock circuit pack, unable to allocated the resources necessary to run the test, or unable to send a down link message. 1. Wait for the green LED on the active tone/clock to go out; use the **status port-network** command to determine the active Tone/Clock circuit pack. 2. Rerun the test. If the test aborts again, refer to TDM-CLK Maintenance documentation.
2000	ABORT	Response to the request was not received within the allowable time period. 1. Look for TDM-CLK errors and alarms. Resolve all other Tone/Clock problems first. 2. Rerun the test.

Continued on next page

Table 3-272. TEST #117 Analog Ring Generator Initialization Test — *Continued*

Error Code	Test Result	Description/ Recommendation
1005	ABORT	The tone/clock is unable to read the analog ringing voltage level when the tone/clock is in the Processor Interface slot. This test is not available for the Processor Port Network in this configuration.
	PASS	The active Tone/Clock has successfully been enabled to monitor the ringing voltage level.

Analog Ring Generator Query Test (#118)

This test requests the Active Tone-Clock circuit pack to check the ringing voltage. The tone/clock circuit pack replies with PASS if the ringing voltage is adequate to ring the analog phones. If not, the active tone/clock circuit pack replies with a FAIL. The Analog Ring Generator Query Test then reports the result.

Table 3-273. TEST #118 Analog Ring Generator Query Test

Error Code	Test Result	Description/ Recommendation
1 1000 1001 1003 1115 2012 2100	ABORT	Could not seize the resources to run the test. Other maintenance is running on the active tone/clock circuit pack. 1. Wait for the green LED on the active tone/clock circuit pack to go out; (use the **status port-network** command to determine the Active tone/clock circuit pack). 2. Rerun the test. If the test aborts again, refer to TDM-CLK (TDM Bus Clock) Maintenance documentation.
2000	ABORT	Response to the request was not received within the allowable time period. 1. Look for TDM-CLK errors and alarms. Resolve all other tone/clock problems first. 2. Rerun the test.
1005	ABORT	The tone/clock is unable to read the analog ringing voltage level when the tone/clock is in the Processor Interface slot. This test is not available for the Processor Port Network in this configuration.

Continued on next page

Table 3-273. TEST #118 Analog Ring Generator Query Test — *Continued*

Error Code	Test Result	Description/ Recommendation
	FAIL	This failure indicates that there is no ringing voltage in the carrier where the active tone/clock circuit pack resides. Other carriers may or may not have ringing voltage. 1. Unseat all analog circuit packs in the cabinet that contains the Tone/Clock circuit pack and rerun the test. 2. If the test passes, then the Ring Generator is healthy and one of the analog circuit packs is defective. Replace the analog circuit packs one at a time, and rerun the test to determine which circuit pack is causing the problem. When the defective analog circuit pack is found, replace it. Rerun the test. If the test still fails, go to Step 4. 3. Replace the 650A power unit, and rerun the test. If the test still fails, go to Step 4. 4. The tone/clock may be faulty and incorrectly reporting the level of the ringing voltage. Replace the tone/clock and rerun the test. Refer to "TONE-BD (Tone-Clock Circuit Pack)" Maintenance documentation for details on replacing the tone/clock circuit pack. Rerun the test.
	PASS	Ringing voltage is acceptable in the cabinet containing the tone/clock circuit pack.

S-SYN-BD (Speech Synthesis Circuit Pack)

MO Name (in Alarm Log)	Alarm Level	Initial Command to Run[1]	Full Name of MO
S-SYN-BD	MIN	test board PCSS sh	Speech Synthesis Circuit Pack
S-SYN-BD	WRN	test board PCSS sh	Speech Synthesis Circuit Pack

1. Where P is the port network number (1); C is the carrier designation (for example, A, B, or C); and SS is the address of the slot in the carrier where the circuit pack is located (for example, 01, 02, ..., etc.).

Refer to XXX-BD (Common Port Circuit Pack) Maintenance documentation for circuit pack level errors. See also S-SYN-PT (Speech Synthesis Port) Maintenance documentation for related port information.

S-SYN-PT (Speech Synthesis Port)

MO Name (in Alarm Log)	Alarm Level	Initial Command to Run[1]	Full Name of MO
S-SYN-PT	MAJOR	test port PCSSpp sh	Speech Synthesis Port
S-SYN-PT	MINOR	test port PCSSpp l	Speech Synthesis Port
S-SYN-PT	WARNING	test port PCSSpp sh	Speech Synthesis Port

1. Where P is the port network number (1); C is the carrier designation (for example, A, B, or C); and SS is the address of the slot in the carrier where the circuit pack is located (for example, 01, 02, ..., etc.).

The TN725 Speech Synthesis circuit pack provides four independent Speech Synthesis Ports which can be connected to any of the voice time slots on the TDM Bus. Each Speech Synthesis Port consists of a speech synthesizer device (SSD) and is managed by a custom-coded programmable speech synthesizer (PSS) controller. The PSS controller is, in turn, controlled by the on-board microprocessor via a command interface specifically designed for this application. The PSS controller's main function is the orderly transfer of encoded speech from the speech vocabulary read-only memory (ROM) to the SSDs. The SSDs decode it and produce 64 kb/s 5-255 PCM (Pulse Code Modulation) speech. The encoded speech is stored in up to 512K bytes of on-board read-only memory (ROM). In addition, each Speech Synthesis Port has an associated dual-tone multifrequency (DTMF) receiver to receive touch-tone digits from a station set connected to the port via a voice time slot. The station set may be connected to the Speech Synthesis Port through either a line or trunk circuit.

When there is an incoming call to a port, the "listen" network time slot is connected to the DTMF receiver input and the "talk" network time slot is connected to the SSD output. This enables the Speech Synthesis Port to support speech synthesis features or touch-tone input with voice response features. Some of the features that use the Speech Synthesis Port's capabilities include Leave Word Calling, Automatic Circuit Assurance, Automatic Wakeup (hotel-motel), and do Not Disturb (hotel-motel).

The Speech Synthesis circuit pack should not be confused with the Announcement circuit pack as different voice features are supported by each circuit pack.

Hardware Error Log Entries and Test to Clear Values

Speech Synthesis Port Error Log Entries

Error Type	Aux Data	Associated Test	Alarm Level	On/Off Board	Test to Clear Value
0[1]	0	Any	Any	Any	test port PCSSpp sh r 1
1(a)	17672	None			
18	0	busyout port PCSSpp	WARNING	OFF	release port PCsspp
130(b)		None	WARNING	ON	test port PCSSpp sh
257		Speech Synthesis PSS Handshake Test (#168)	MAJOR	ON	test port PCSSpp sh r 2
513	17922	Speech Synthesis Memory Test (#166)	MINOR	ON	test port PCSSpp sh r 2
769	17664	Speech Synthesis DTMF Receiver Inquiry Test (#164)	MINOR	ON	test port PCSSpp sh r 2
1025	17670	Speech Synthesis SSD Inquiry Test (#167)	MINOR	ON	test port PCSSpp sh r 2
1281		Speech Synthesis DSP Tone Test (#165)	MINOR	ON	test port PCSSpp sh r 2
1537		Speech Synthesis Memory Test (#166)	MINOR	ON	test port PCSSpp sh r 2
1793		Speech Synthesis DTMF Receiver Test (#163)	MINOR	ON	test port PCSSpp l r 2
2049(c)		Conference Circuit Test (#7)	MINOR	ON	test port PCSSpp l r 2
2305		NPE Crosstalk Test (#6)	MINOR	ON	test port PCSSpp l r 2
3840(d)	Any	None			

1. Run the Short Test Sequence first. If all tests pass, run the Long Test Sequence. Refer to the appropriate test description and follow the recommended procedures.

Notes:

a. An in-line failure of the on-board microprocessor/PSS handshake has occurred. Refer to Test #168 for repair procedures.

b. This error type indicates that the circuit pack been removed or has been insane for more than 11 minutes. To clear the error, reinsert or replace the circuit pack.

c. A transient error that does not cause an alarm can occasionally occur during a SPE, TDM BUS, or Tone Clock interchange. Test the port and follow the instructions for conference Test (#7).

d. This error is not service-affecting and no action is required.

System Technician-Demanded Tests: Descriptions and Error Codes

Always investigate tests in the order presented in the table below when inspecting errors in the system. By clearing error codes associated with the *NPE Crosstalk Test,* for example, you may also clear errors generated from other tests in the testing sequence.

For example, you may also clear errors generated from other tests in the testing sequence.

Order of Investigation	Short Test Sequence	Long Test Sequence	D/ND[1]
Speech Synthesis PSS Handshake Test (#168)	X	X	ND
NPE Crosstalk Test (#6)		X	ND
Conference Circuit Test (#7)		X	ND
Speech Synthesis DTMF Receiver Test (#163)		X	ND
Speech Synthesis Memory Test (#166)	X	X	ND
Speech Synthesis DSP Tone Test (#165)	X	X	ND
Speech Synthesis SSD Inquiry Test (#167)	X	X	ND
Speech Synthesis DTMF Receiver Inquiry Test (#164)	X	X	ND
Speech Synthesis Parameter Update Test (#169)	X	X	ND

1. D = Destructive; ND = Nondestructive

NPE Crosstalk Test (#6)

One or more NPEs reside on each circuit pack with a TDM Bus interface. The NPE controls port connectivity and gain, and provides conferencing functions on a per-port basis. The NPE Crosstalk Test verifies that this port's NPE channel talks on the selected time slot and never crosses over to time slots reserved for

other connections. If the NPE is not working correctly, one-way and noisy connections may occur. This test is usually only part of a port's Long Test Sequence and takes about 20 to 30 seconds to complete.

Table 3-274. TEST #6 NPE Crosstalk Test

Error Code	Test Result	Description/ Recommendation
	ABORT	Could not allocate the necessary system resources to run this test. 1. Retry the command at 1-minute intervals a maximum of 5 times.
1000	ABORT	System resources required to run this test are not available. The port may be busy with a valid call and therefore unavailable for certain tests. You must wait until the port is idle (yellow LED if off) before retesting. 1. If the port is idle, retry the command at 1-minute intervals a maximum of 5 times.
1001	ABORT	Could not allocate the necessary system resources to run this test. 1. Retry the command at 1-minute intervals a maximum of 5 times.
1002	ABORT	The system could not allocate time slots for the test. The system may be under heavy traffic conditions or it may have time slots out-of-service due to TDM-BUS errors. Refer to TDM-BUS (TDM Bus) Maintenance documentation to diagnose any Active TDM-BUS errors. 1. If system has no TDM-BUS errors and is not handling heavy traffic, repeat test at 1-minute intervals a maximum of 5 times.
1003	ABORT	The system could not allocate a tone receiver for the test. The system may be oversized for the number of Tone Detectors present or some Tone Detectors may be out-of-service. 1. Look for TTR-LEV errors in the Error Log. If present, refer to TTR-LEV (TTR Level) Maintenance documentation. 2. Look for TONE-PT errors in the Error Log. If present, refer to TONE-PT (Tone Generator) Maintenance documentation. 3. If neither condition exists, retry the test at 1-minute intervals a maximum of 5 times.
1004	ABORT	The port was seized by a valid call during the test and the test has been aborted. You must wait until the port is idle (yellow LED if off) before retesting. 1. Retry the command at 1-minute intervals a maximum of 5 times.
1020	ABORT	The test did not run due to an already existing error on the specific port or a more general circuit pack error. 1. Examine Error Log for existing errors against this port or the circuit pack and attempt to diagnose the already existing error.

Continued on next page

Table 3-274. TEST #6 NPE Crosstalk Test — *Continued*

Error Code	Test Result	Description/ Recommendation
2000	ABORT	Response to the test request was not received within the allowable time period.
2100	ABORT	Could not allocate the necessary system resources to run this test. 1. Retry the command at 1-minute intervals a maximum of 5 times.
Any	FAIL	The NPE of the tested port was found to be transmitting in error. This causes noisy and unreliable connections. 1. Replace the circuit pack.
	PASS	The port is correctly using its allocated time slots. User-reported troubles on this port should be investigated using other port tests and examining the Error Log.

Conference Circuit Test (#7)

One or more NPEs reside on each circuit pack with a TDM Bus interface. The NPE controls port connectivity and gain, and provides conferencing functions on a per-port basis. The Conference Circuit Test verifies that the NPE channel for the port being tested can correctly perform the conferencing function. The NPE is instructed to listen to several different tones and conference the tones together. The resulting signal is then measured by a Tone Detector port. If the level of the tone is within a certain range, the test passes.

Table 3-275. TEST #7 Conference Circuit Test

Error Code	Test Result	Description/ Recommendation
	ABORT	Could not allocate the necessary system resources to run this test. 1. Retry the command at 1-minute intervals a maximum of 5 times.
1000	ABORT	System resources required to run this test are not available. The port may be busy with a valid call and therefore unavailable for certain tests. You must wait until the port is idle (yellow LED if off) before retesting. 1. If the port is idle, retry the command at 1-minute intervals a maximum of 5 times.

Continued on next page

Table 3-275. TEST #7 Conference Circuit Test — *Continued*

Error Code	Test Result	Description/ Recommendation
1004	ABORT	The port was seized by a valid call during the test and the test has been aborted. You must wait until the port is idle (yellow LED if off) before retesting. 1. Retry the command at 1-minute intervals a maximum of 5 times.
1020	ABORT	The test did not run due to an already existing error on the specific port or a more general circuit pack error. 1. Examine Error Log for existing errors against this port or the circuit pack and attempt to diagnose the already existing error.
2000	ABORT	Response to the test request was not received within the allowable time period.
2100	ABORT	Could not allocate the necessary system resources to run this test. 1. Retry the command at 1-minute intervals a maximum of 5 times.
Any	FAIL	The NPE of the tested port did not conference the tones correctly. This causes noisy and unreliable connections. 1. Retry the test.
	PASS	The port can correctly conference multiple connections. User-reported troubles on this port should be investigated using other port tests and examining the Error Log.

Speech Synthesis DTMF Receiver Test (#163)

A series of DTMF tones are conferenced from the TDM Bus into the port's DTMF receiver and checked to see if the correct tones have been detected during the correct intervals. If all the DTMF tones were detected correctly, the test passes. If any of the tones were not detected correctly, the test fails.

Table 3-276. TEST #163 Speech Synthesis DTMF Receiver

Error Code	Test Result	Description/ Recommendation
	ABORT	Could not allocate the necessary system resources to run this test. 1. Retry the command at 1-minute intervals a maximum of 5 times.

Continued on next page

Table 3-276. TEST #163 Speech Synthesis DTMF Receiver — *Continued*

Error Code	Test Result	Description/ Recommendation
1000	ABORT	System resources required to run this test are not available. The port may be busy with a valid call and therefore unavailable for certain tests. You must wait until the port is idle (yellow LED if off) before retesting. 1. If the port is idle, retry the command at 1-minute intervals a maximum of 5 times.
2000	ABORT	Response to the test request was not received within the allowable time period.
2100	ABORT	Could not allocate the necessary system resources to run this test. 1. Retry the command at 1-minute intervals a maximum of 5 times.
Any	FAIL	DTMF tones were not detected. This type of failure may cause features using touch-tone input to the Speech Synthesis Port to malfunction. 1. Verify that the Tone-Clock circuit pack is functioning correctly by checking the Error Log and using the **test tone-clock long** command. 2. If the test fails again, replace the Speech Synthesis circuit pack.
	PASS	The port has detected all DTMF tones correctly. User-reported troubles should be investigated using other tests and verifying other ports on this circuit pack are working correctly.

Speech Synthesis DTMF Receiver Inquiry Test (#164)

This test determines the sanity of the port's DTMF receiver. The on-board microprocessor tests the port's DTMF receiver and determines if it is in a sane (test passes) or insane (test fails) condition.

Table 3-277. TEST #164 Speech Synthesis DTMF Receiver Inquiry Test

Error Code	Test Result	Description/ Recommendation
	ABORT	Could not allocate the necessary system resources to run this test. 1. Retry the command at 1-minute intervals a maximum of 5 times.

Continued on next page

Table 3-277. TEST #164 Speech Synthesis DTMF Receiver Inquiry Test — *Continued*

Error Code	Test Result	Description/ Recommendation
1000	ABORT	System resources required to run this test are not available. The port may be busy with a valid call and therefore unavailable for certain tests. You must wait until the port is idle (yellow LED if off) before retesting. 1. If the port is idle, retry the command at 1-minute intervals a maximum of 5 times.
2000	ABORT	Response to the test request was not received within the allowable time period.
2100	ABORT	Could not allocate the necessary system resources to run this test. 1. Retry the command at 1-minute intervals a maximum of 5 times.
Any	FAIL	The DTMF receiver for this port is insane. 1. If the test fails again, replace the circuit pack.
	PASS	The DTMF receiver for this port is sane. User-reported troubles should be investigated using other tests and verifying other ports on this circuit pack are working correctly.

Speech Synthesis DSP Tone Test (#165)

The digital signal processor (DSP) associated with each port can generate a 440-Hz tone whose presence can be detected by TN748 General Purpose Tone Detector circuit packs. A 440-Hz tone is generated for 500 msec on a specified time slot which is being listened to by the detector circuit. If the detector determines the tone is present on the time slot, the test passes; otherwise, it fails.

Table 3-278. TEST #165 Speech Synthesis DSP Tone Test

Error Code	Test Result	Description/ Recommendation
	ABORT	Could not allocate the necessary system resources to run this test. 1. Retry the command at 1-minute intervals a maximum of 5 times.
1000	ABORT	System resources required to run this test are not available. The port may be busy with a valid call and therefore unavailable for certain tests. You must wait until the port is idle (yellow LED if off) before retesting. 1. If the port is idle retry the command at 1-minute intervals a maximum of 5 times.

Continued on next page

Table 3-278. TEST #165 Speech Synthesis DSP Tone Test — *Continued*

Error Code	Test Result	Description/ Recommendation
1001 1002 1003	ABORT	System resources required to run this test are not available. 1. Retry the command at 1-minute intervals a maximum of 5 times.
1021	ABORT	The 440-Hz tone was not detected by the Tone Detector circuit and inter-digit time-out has occurred on the Tone Detector circuit. 1. Retry the command at 1-minute intervals a maximum of 5 times. 2. If the test continues to abort, verify all Tone Detector circuit packs in the system are functioning correctly by checking the Error Log and using the **test board PCSS long** command. Replace any faulty Tone Detector circuit packs and repeat the test. 3. If the test continues to abort, replace the Speech Synthesis circuit pack.
2000	ABORT	Response to the test request was not received within the allowable time period.
2100	ABORT	Could not allocate the necessary system resources to run this test. 1. Retry the command at 1-minute intervals a maximum of 5 times.
Any	FAIL	The 440-Hz tone was not detected by the Tone Detector circuits. 1. If the test fails again, verify all Tone Detector circuit packs in the system are functioning correctly by checking the Error Log and using the **test board PCSS long** command. Replace any faulty Tone Detector circuit packs and repeat the test. 2. If the test fails again, replace the Speech Synthesis circuit pack.
	PASS	The 440-Hz tone has been detected correctly. User-reported troubles should be investigated using other tests and verifying other ports on this circuit pack are working correctly.

Speech Synthesis Memory Test (#166)

The encoded speech for the Speech Synthesis circuit pack is stored in on-board read-only memory. A checksum is computed for each 32K speech memory block and compared against a known checksum value. If all computed checksum values are successfully compared against the stored checksum values, the test passes. If, while testing the speech complex memory, the on-board microprocessor finds a memory error, the test is terminated and a failure is reported. This type of failure may affect other ports on the Speech Synthesis circuit pack, resulting in errors or alarms on each port.

Table 3-279. TEST #166 Speech Synthesis Memory Test

Error Code	Test Result	Description/ Recommendation
	ABORT	Could not allocate the necessary system resources to run this test. 1. Retry the command at 1-minute intervals a maximum of 5 times.
1000	ABORT	System resources required to run this test are not available. The port may be busy with a valid call and therefore unavailable for certain tests. You must wait until the port is idle (yellow LED if off) before retesting. 1. If the port is idle, retry the command at 1-minute intervals a maximum of 5 times.
1019	ABORT	Test is already running on a different port, possibly due to background maintenance activity. Only one of these tests may be active on a circuit pack at a time. 1. Retry the command at 1-minute intervals a maximum of 5 times.
2000	ABORT	Response to the test request was not received within the allowable time period.
2100	ABORT	Could not allocate the necessary system resources to run this test. 1. Retry the command at 1-minute intervals a maximum of 5 times.
Any	FAIL	The computed checksum from the speech vocabulary read-only memory did not compare correctly with the stored checksum. This type of failure may cause features using the Speech Synthesis Port's speech services to malfunction and result in degradation of synthesized speech quality ranging from insignificant to major. 1. Replace the circuit pack.
	PASS	The computed checksum values were successfully compared against the stored checksum values. User-reported troubles should be investigated using other tests and verifying other ports on this circuit pack are working correctly.

Speech Synthesis SSD Inquiry Test (#167)

This test determines the sanity of the specified port's Speech Synthesis Device (SSD). The on-board microprocessor tests the port's SSD and determines if it is in a sane (test passes) or insane (test fails) condition. Other ports on the Speech Synthesis circuit pack continue to function correctly during this type of failure.

Table 3-280. TEST #167 Speech Synthesis SSD Inquiry Test

Error Code	Test Result	Description/ Recommendation
	ABORT	Could not allocate the necessary system resources to run this test. 1. Retry the command at 1-minute intervals a maximum of 5 times.
1000	ABORT	System resources required to run this test are not available. The port may be busy with a valid call and therefore unavailable for certain tests. You must wait until the port is idle (yellow LED if off) before retesting. 1. If the port is idle, retry the command at 1-minute intervals a maximum of 5 times.
2000	ABORT	Response to the test request was not received within the allowable time period.
2100	ABORT	Could not allocate the necessary system resources to run this test. 1. Retry the command at 1-minute intervals a maximum of 5 times.
Any	FAIL	The SSD is insane. 1. Replace the circuit pack.
	PASS	The SSD is sane. User-reported troubles should be investigated using other tests and verifying other ports on this circuit pack are working correctly.

Speech Synthesis PSS Handshake Test (#168)

This test verifies control functionality between the on-board microprocessor and PSS controller. A failure occurs if either of the following events occur:

- The on-board microprocessor times out while waiting for the PSS controller to respond.
- An invalid command is received by the on-board microprocessor from the PSS controller.

This type of failure affects all four ports on the Speech Synthesis circuit pack, resulting in errors or alarms on each port.

Table 3-281. TEST #168 Speech Synthesis PSS Handshake Test

Error Code	Test Result	Description/ Recommendation
	ABORT	Could not allocate the necessary system resources to run this test. 1. Retry the command at 1-minute intervals a maximum of 5 times.
1000	ABORT	System resources required to run this test are not available. The port may be busy with a valid call and therefore unavailable for certain tests. You must wait until the port is idle (yellow LED if off) before retesting. 1. If the port is idle, retry the command at 1-minute intervals a maximum of 5 times.
2000	ABORT	Response to the test request was not received within the allowable time period.
2100	ABORT	Could not allocate the necessary system resources to run this test. 1. Retry the command at 1-minute intervals a maximum of 5 times.
Any	FAIL	The on-board microprocessor has timed out while waiting for the PSS controller to respond or an invalid command has been received by the on-board microprocessor from the PSS controller. This type of failure may cause features using the Speech Synthesis Port's speech services to malfunction. 1. Replace the circuit pack.
	PASS	The on-board microprocessor/PSS handshake is working correctly. User-reported troubles should be investigated using other tests and verifying other ports on this circuit pack are working correctly.

Speech Synthesis Parameter Update Test (#169)

This test updates the DTMF interdigit time-out parameter used by the Speech Synthesis circuit pack to be consistent with that specified by the switch processing element (SPE).

Table 3-282. TEST #169 Speech Synthesis Parameter Update Test

Error Code	Test Result	Description/ Recommendation
	ABORT	Could not allocate the necessary system resources to run this test. 1. Retry the command at 1-minute intervals a maximum of 5 times.

Continued on next page

Table 3-282. TEST #169 Speech Synthesis Parameter Update Test — *Continued*

Error Code	Test Result	Description/ Recommendation
1000	ABORT	System resources required to run this test are not available. The port may be busy with a valid call and therefore unavailable for certain tests. You must wait until the port is idle (yellow LED if off) before retesting. 1. If the port is idle, retry the command at 1-minute intervals a maximum of 5 times.
2100	ABORT	Could not allocate the necessary system resources to run this test. 1. Retry the command at 1-minute intervals a maximum of 5 times.
Any	FAIL	An internal system error has occurred.
	PASS	The DTMF interdigit time-out parameter has been updated. 1. User-reported troubles should be investigated using other tests and by verifying that other ports on this circuit pack are working correctly.

SEC-CDR (SEC-CDR Link Maintenance)

MO Name (in Alarm Log)	Alarm Level	Initial Command to Run	Full Name of MO
PRI-CDR/SEC-CDR	MINOR	test cdr-link primary/secondary l	CDR Link
PRI-CDR/SEC-CDR	WARNING	test cdr-link primary/secondary	CDR Link

The SEC-CDR (SEC-CDR Link) maintenance strategy is covered in the PRI-CDR/SEC-CDR (PRI-CDR Link) Maintenance documentation.

SW-CTL (Switch Control)

MO Name (in Alarm Log)	Alarm Level	Initial Command to Run	Full Name of MO
SW-CTL	MINOR	test network-control a sh	Switch Control
SW-CTL	MAJOR	test network-control a sh	Switch Control

The Switch Control resides on the TN798 Processor circuit pack. The data channels (DATA-BD and DATA-CHL) also reside on the Processor circuit pack. The Switch Control is used to send control information between port circuit packs and the processor. This control information is sent via the PPN cabinet's Time Division Multiplex (TDM) Bus. The portion of the TDM Bus used to transmit control messages is called the control channel. The control channel can be on either TDM Bus A or TDM Bus B, but only one bus is used for the control channel at any given time.

The Switch Control is critical in the setup and take down of all calls but is not involved in the voice or data transmission that takes place during established calls. It is the Switch Control that detects when port circuit packs are plugged into or removed from the PPN cabinet. This information is then sent to the processor. The Switch Control monitors the health of the control channel on the PPN cabinet TDM Bus and informs the processor when errors occur.

The Switch Control contains the hardware Time of Day (TIME-DAY) clock that the system uses for all its date and time information. In addition, the Switch Control also contains hardware to monitor critical system timing signals and informs the processor when these signals fail. For example, if the timing signals from a Tone-Clock circuit pack in the PPN cabinet fail, the Switch Control informs the processor.

Error Log Entries and Test to Clear Values

Table 3-283. SW-CTL Error Log Entries

Error Type	Aux Data	Associated Test	Alarm Level	On/Off Board	Test to Clear Value
0[1]	0	Any	Any	Any	test network-control a sh r 1
1	Any	Control Channel Test (#94)	MAJOR	ON	test network-control a r 3
2 (a)		Control Channel Test (#94)	MAJOR	ON	test network control a r 3
257 (b)	0 or 1	None			

Continued on next page

Table 3-283. SW-CTL Error Log Entries — *Continued*

Error Type	Aux Data	Associated Test	Alarm Level	On/Off Board	Test to Clear Value
513	(c)	Time of Day Clock Test (#95)	MINOR	ON	test network-control a l r 3
769 (d)	Any	None			
1025		Switch Control Loop Around Test (#92)	MAJOR	ON	test network-control a r 3
1281 (e)	Any	None			
1537		Switch Control Reset Test #93	MAJOR	ON	test network-control a l r 2
1793 (f)	Any	None			
3329 (g)		None	MAJOR	ON	(g)

1. Run the Short Test Sequence first. If all tests pass, run the Long Test Sequence. Refer to the appropriate test description and follow the recommended procedures.

Notes:

a. This error may not cause a Switch Control alarm if Error Type 769 is also present since this error may actually be caused by the loss of clock signals and not by a Switch Control failure.

b. The 257 errors are reported to the processor by the Switch Control and indicate possible hardware problems on the Processor circuit pack. The receipt of these errors causes Switch Control maintenance to run specific Switch Control tests. If there really is a problem, the Switch Control tests usually causes other errors to be logged. In the rare case where no other errors are logged but 257 errors are occurring at a high rate (more than 10 in the last hour), the Processor circuit pack should be replaced at the customer's convenience.

c. If the Aux Data is less than 100, the test may have been interrupted by LMM operations. Wait 1 minute, then test again. Retry the test a maximum of 3 times. If the Aux Data is more than 100 or fails two out of three times with Aux Data less than 100, the Processor circuit pack needs to be replaced.

d. A 769 error occurs when the Switch Control reports a loss of timing signals to the processor. When this error is present, the Switch Control is usually not alarmed since any Switch Control test failures are really the result of faulty signals from the PPN cabinet Tone-Clock circuit pack. See TDM-CLK (TDM Bus Clock) Maintenance documentation for the procedures needed to diagnose Tone-Clock circuit pack troubles.

e. This error indicates a loss of handshake between SW-CTL and the system software. Look for and resolve all other SW-CTL errors. In the rare case where no other errors are logged, but Error Type 1281 is occurring at a high rate (more than 10 in the previous hour), escalate the problem.

   A loss of handshake is caused by the Processor circuit pack. Follow these repair steps:

   1. Look for and resolve all other SW-CTL errors.
   2. Look for and resolve all other PKT-CTRL errors.
   3. If the error indicates a failure in the Processor circuit pack, replace the Processor circuit pack. Boot the system up after the Processor circuit pack has been inserted successfully into the control carrier.
   4. If the error of loss of handshake persists after the replacement of the Processor circuit pack, consider the replacement of the control carrier. It's possible that the backplane of the control carrier may be defective.

      Recommended Repair Kits: Processor circuit pack (TN798) with correct software release.

f. The Aux Data for this error is not meaningful. The 1793 errors are in-line errors that indicate a possible problem with the interface between the Switch Control and the processor. The receipt of these errors causes Switch Control maintenance to run specific Switch Control tests. If there really is a problem, the Switch Control tests usually causes other errors to be logged. In the rare case where no other errors are logged but 1793 errors are occurring at a high rate (more than 10 in the last hour), the Processor circuit pack should be replaced at the customer's convenience.

g. This error indicates bad clock detection circuitry on the Processor circuit pack. Replace the Processor circuit pack according to the control carrier circuit pack replacement procedures.

System Technician-Demanded Tests: Descriptions and Error Codes

Always investigate tests in the order presented in the table below when inspecting errors in the system. By clearing error codes associated with the *Switch Control Reset Test,* for example, you may also clear errors generated from other tests in the testing sequence.

Order of Investigation	Short Test Sequence	Long Test Sequence	D/ND[1]
Switch Control Reset Test (#93)		X	D
Control Channel Interface Test (#92)	X	X	ND
Control Channel Transmission Test (#94)	X	X	ND
Time of Day Clock Test (#95)	X	X	ND
Control Channel Loop Around Test (DATA-BD) (#52) (a)	X	X	ND
NPE Audit Test (DATA-BD) (#50) (a)		X	ND
Data Channel Reset Test (DATA-CHL) (#107) (b)		X	D
Data Channel Interface Test (DATA-CHL) (#108) (b)		X	D
Maintenance Loop Around Test (DATA-CHL) (#109) (b)	X	X	ND
Data Channel Crosstalk Test (DATA-CHL) (#110) (b)	X	X	ND
Data Channel Local Loop Back Test (DATA-CHL) (#111) (b)	X	X	ND

1. D = Destructive; ND = Nondestructive

Notes:

a. Refer to DATA-BD (Network Control Circuit Pack) Maintenance documentation for a description of these tests.

b. Refer to DATA-CHL (Network Control Channel) Maintenance documentation for a description of these tests.

Control Channel Interface Test (#92)

Loop back messages are sent to the Switch Control via the interface used for control channel messages. The messages are returned to the SPE for verification via the same interface.

Table 3-284. TEST #92 Control Channel Interface Test

Error Code	Test Result	Description/ Recommendation
2012	ABORT	Internal system error
2013 2100 none	ABORT	Could not allocate the necessary system resources to run this test. 1. Retry the command at 1-minute intervals a maximum of 5 times.
other	FAIL	Messages could not be looped back through the control channel interface. If this is a standard system, the customer probably cannot make or receive calls. 1. This failure could be due to either a Processor circuit pack failure or the loss of system timing signals. If the Switch Control is alarmed, then suspect a Processor circuit pack failure. If the Switch Control is not alarmed, investigate the possible loss of system timing signals before replacing the Processor circuit pack. Test #94 also fails if the system timing signals are lost. If Test #94 passes, do not suspect the loss of timing signals. 2. Run the Short Test Sequence several times to make sure that this failure is occurring consistently, run the Long Test Sequence to reset the Switch Control. Sometimes running the Long Test Sequence may clear the problem. If the test is still failing, proceed to Step 3 or 4. 3. If the system can process calls, replace the Processor board. 4. If calls cannot be made, replace the Processor board immediately.
	PASS	The control channel interface between the processor and the Switch Control is working correctly.

Switch Control Reset Test (#93)

This test is destructive.

This test resets the Switch Control and determines if it can successfully go through its initialization sequence. The test is destructive since there is the possibility of losing some control messages to or from port circuit packs.

Table 3-285. TEST #93 Switch Control Reset Test

Error Code	Test Result	Description/ Recommendation
2012	ABORT	Internal system error
2013 2100 none	ABORT	Could not allocate the necessary system resources to run this test. 1. Retry the command at 1-minute intervals a maximum of 5 times.
2000 or None	FAIL	The Switch Control could not be successfully reset. If this is a standard system, the customer probably cannot make or receive calls. 1. This failure could be due to either a Processor circuit pack failure or the loss of system timing signals. If the Switch Control is alarmed, then suspect a Processor circuit pack failure. If the Switch Control is not alarmed, investigate the possible loss of system timing signals. See “TDM Bus Clock”. If many port circuit pack LEDs are lit, suspect a TDM Bus Clock problem. If only the Processor circuit pack LED is lit, suspect the Processor circuit pack. If the Processor circuit pack is determined to be at fault, proceed to Step 2. 2. If calls cannot be made, replace the Processor board.
	PASS	The Switch Control has initialized correctly. Look at results of the other tests to see if it is operating correctly.

Control Channel Transmission Test (#94)

Control channel messages are sent from the SPE to selected port circuit packs and the response from the port circuit packs is checked. This tests the ability of the Switch Control to send and receive messages on the control channel of the TDM Bus.

Table 3-286. TEST #94 Control Channel Transmission Test

Error Code	Test Result	Description/ Recommendation
0	ABORT	The port circuit packs necessary for this test are not available. 1. Retry the command at 1-minute intervals a maximum of 5 times. 2. If the test continues to abort, then replace the Processor circuit pack.

Continued on next page

Table 3-286. TEST #94 Control Channel Transmission Test — *Continued*

Error Code	Test Result	Description/ Recommendation
2012	ABORT	Internal system error
2013 2100 none	ABORT	Could not allocate the necessary system resources to run this test. 1. Retry the command at 1-minute intervals a maximum of 5 times.
0	FAIL	The Switch Control cannot communicate on the TDM Bus control channel. The customer probably cannot make or receive calls. 1. Run the Short Test Sequence several times to make sure this failure is occurring consistently, run the Long Test Sequence to reset the Switch Control. Sometimes, running the Long Test Sequence may clear the problem. Remember that the Long Test Sequence is **destructive**. Placing and receiving calls is affected for several seconds. 2. If there are no TDM Bus alarms against the Standby TDM Bus, switch the control channel from its current bus to the Standby bus. If this test passes on the new bus, investigate the possibility of TDM Bus failures. If the test fails even after the control channel is switched to the standby TDM Bus, proceed to Step 3. 3. If calls cannot be made, replace the Processor board.
	PASS	The Switch Control can communicate with the port circuit packs over the TDM Bus.

Time of Day Clock Test (#95)

The short term accuracy of the Time of Day (TIME-DAY) clock is tested. The test reads the clock once, waits a short time, and reads the clock again. The second reading of the clock must be within certain limits relative to the first reading for the test to pass. The **display time** command can be used to display the current setting of the TIME-DAY clock.

Table 3-287. TEST #95 Time of Day Clock Test

Error Code	Test Result	Description/ Recommendation
1000	ABORT	The test was interrupted by a higher priority task. 1. Rerun the test at 1-minute intervals a maximum of 5 times. 2. If the test aborts 5 times, wait until the system is less heavily used and rerun the test at that time.
2012	ABORT	Internal system error
2013	ABORT	Could not allocate the necessary system resources to run this test. 1. Retry the command at 1-minute intervals a maximum of 5 times.
2001	FAIL	The Time of Day clock could not be read. 1. Run the **set time** command and set the time to the current time. 2. Run the Short Test Sequence several times to determine if setting the time corrected the error. Proceed to Step 3 if the error is still occurring. 3. Replace the Processor circuit pack at the customer's convenience .
other	FAIL	The accuracy of Time of Day clock is not within limits. 1. Run the Short Test Sequence several times to make sure the error is occurring consistently. 2. Replace the Network Control (DATA-BD) circuit pack at the customer's convenience..
	PASS	The Time of Day clock on the Switch Control circuit pack is operating correctly.

SYNC (Synchronization)

MO Name (in Alarm Log)	Alarm Level	Initial Command to Run	Full Name of MO
SYNC	MAJOR	display errors	Synchronization Maintenance
SYNC	MINOR	display errors	Synchronization Maintenance
SYNC	WARNING	test synchronization	Synchronization Maintenance

The Synchronization Maintenance is composed of both hardware and software components and its purpose is to provide a common reference frequency for reliable digital communication between systems and other PBXs, COs or CPE. Synchronization is achieved via the use of several system components which include the Tone-Clock and the DS1 Interface.

Depending on the network synchronization plan and the status of synchronization sources, the system timing reference may be a Tone-Clock circuit pack or DS1 interface circuit packs. Stratum 4 synchronization extracts timing information directly from a DS1 reference or from a Tone-Clock.

Stratum 4 Synchronization

The system can be configured with primary and secondary synchronization references (DS1 interface circuit packs) when using Stratum 4 synchronization. Both references are optional (since the local oscillator can be used), and the secondary reference is optional if a primary is provided. If this system is the master for the network, then its local oscillator would be used and no DS1s would be used as references.

If the primary synchronization reference is not providing a valid timing signal, the system automatically switches to the secondary synchronization reference. If the secondary reference does not provide a valid timing signal or is not administered as a synchronization reference, a Tone-Clock circuit pack provides the system timing source. The system does not revert to the primary if the current reference is the secondary and is failing; however the system switches from the local oscillator to another reference when the new reference becomes available. **Both the primary and secondary references must reside in the PPN.**

There are two kinds of Stratum 4 synchronization that are supported: Type I and Type II. Stratum 4 type I is more stable than Type II and provides some switching capability at the hardware level. It is important to note that Stratum 4 Type I operation is not possible when one or both of the DS1 interface circuit packs providing the reference sources is a TN722. Both must be the TN767B (or higher) or TN464C (or higher).

Synchronization Troubleshooting

For Stratum 4 operation, major and minor alarms indicate that there is a problem with the system synchronization references. These alarms are resolved when the alarmed synchronization reference is restored.

The **status synchronization** and **display synchronization** commands are used to determine the current system synchronization reference and the primary and secondary references that are administered respectively.

Other commands associated with Synchronization Maintenance are **disable synchronization-switch** and **enable synchronization-switch.** These commands are used to disable the ability of Synchronization Maintenance to switch between synchronization references and to enable this switching ability, respectively. The **set synchronization** command is executed only after synchronization has been disabled and is used to manually switch to a specific synchronization reference. This command is useful to diagnose synchronization problems by forcing a specific reference (DS1 or Tone-Clock) to be the system synchronization reference to determine if a specific reference is providing a valid timing signal. For Stratum 3 operation, only a TN780 Tone-Clock circuit pack may be specified. To switch synchronization to the Stratum 3 clock, use the **enable synchronization-switch** command after verifying that the Stratum 3 clock is wired correctly.

The system synchronization planner must avoid creating a *timing loop* when administering the primary and secondary synchronization references in a system. A timing loop exists whenever a system receives timing from another system whose timing reference is directly or indirectly derived from itself. Timing loops can lead to loss of digital data between systems that are exchanging data with any system within the loop. An invalid timing signal is also generated by any system within the loop, thus propagating the invalid timing signal to any system(s) using a system within the loop as a synchronization reference. Figure 3-27 shows a timing loop and a correct distribution of timing between the systems.

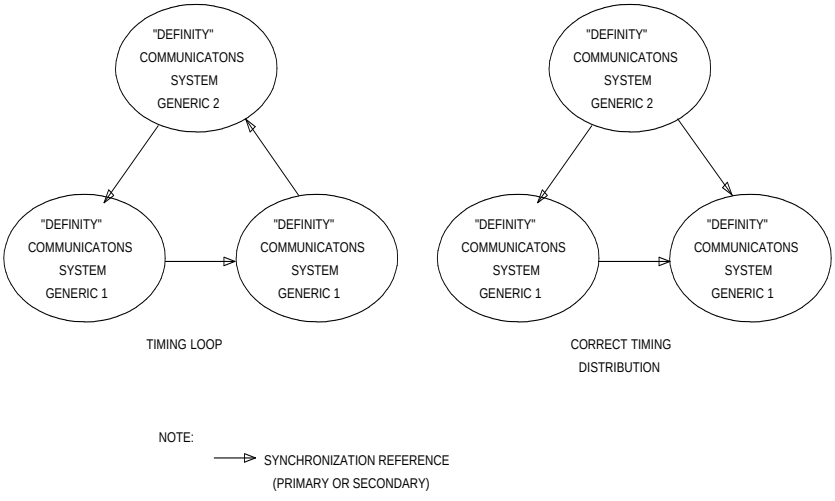

Figure 3-27. Synchronization Timing Loop

A correctly designed network has no loops and each piece of equipment in the network is supplied by a clock of equal or lower stratum (that is, the inputs to a Stratum 3 clock should NEVER be from a Stratum 4 device). **It is strongly recommended that the network administrator be consulted before administering any synchronization changes.**

Error Log Entries and Test to Clear Values

Table 3-288. Synchronization Error Log Entries

Error Type	Aux Data	Associated Test	Alarm Level	On/Off Board	Test to Clear Value
0[1]	0	Any	Any	Any	test synchronization
1 (a)[1]	Any	None	WARNING/ MINOR(j)[2]	OFF	None
18 (b)	0	disable sync	WARNING	OFF	enable sync
257 (c)[1]	Any	None	WARNING/ MINOR(j)[2]	OFF	None
513 (d)[1]	Any	None	WARNING/ MAJOR(j)[2]	OFF	None

Continued on next page

Table 3-288. Synchronization Error Log Entries — *Continued*

Error Type	Aux Data	Associated Test	Alarm Level	On/Off Board	Test to Clear Value
769 (e)		None	MAJOR/ WARNING[3]	OFF	None
1793 [4]	0-50	None	MAJOR/ WARNING	OFF	enable sync
2049 (f) (h)[4]	0	None	WARNING	OFF	None
2305 (g) (h)[4]	0	None	WARNING	OFF	None

1. Run the Short Test Sequence first. If all tests pass, run the Long Test Sequence. Refer to the appropriate test description and follow the recommended procedures.
2. This error type initially raises a Warning alarm. If this error type persists and alarms are not downgraded on this MO due to the value of **set options**, then, after a period of time, a Minor or Major alarm is raised.
3. Major alarms on this MO may be downgraded to Warning alarms based on the value used in the **set options** command.
4. It may take up to one hour for these SYNC alarms to clear due to "leaky bucket" strategy.

Notes:

a. This error indicates a problem with the primary DS1 reference. It is cleared when the primary reference is restored. The following steps should give an indication of the source of the problem:

   1. Check if the primary DS1 interface circuit pack is inserted in the carrier via the **list configuration board PCSS** command.
   2. Check the connection of the cable supplying the external timing source to the primary DS1 interface circuit pack.
   3. Test the primary DS1 interface circuit pack via the **test board PCSS long** command. Check the Error Log for DS1-BD errors and refer to the DS1-BD (DS1 Interface Circuit Pack) Maintenance documentation to resolve any errors associated with the primary DS1 interface circuit pack. If no errors are listed in the Error Log for the primary DS1 interface circuit pack, continue with the following steps.
   4. Test the active Tone-Clock circuit pack in the master port network via the **test tone/clock PC long** command. Check the Error Log for TDM-CLK errors and verify that TDM Bus Clock Test #148 passes successfully. If Test #148 fails with an Error Code 2 through 32, refer to "TDM-CLK (TDM Bus Clock)" to resolve the problem. If not, continue with the following steps.

5. Execute the **disable synchronization-switch** and the **enable synchronization-switch** commands. These two commands (when executed together) switch the system synchronization reference to the primary DS1 interface circuit pack. Check the Error Log and execute the **status synchronization** command to verify that the primary DS1 interface circuit pack is still the system synchronization reference. If the primary DS1 interface circuit pack is not the system synchronization reference, continue with the following step.

b. This error indicates that Synchronization Maintenance has been disabled via the **disable synchronization-switch** command. Execute the **enable synchronization-switch** command to enable Synchronization Maintenance reference switching and to resolve this alarm.

c. This error indicates a problem with the secondary DS1 reference. It is cleared when the secondary reference is restored. Refer to note (a) to resolve this error substituting **secondary** for **primary** in the preceding resolution steps.

d. This error indicates that the Tone-Clock circuit pack is providing the timing source for the system. The primary and secondary (if administered) are not providing a valid timing signal. Investigate errors 1 and 257 to resolve this error.

e. This error indicates excessive switching of system synchronization references has occurred. When this error occurs, synchronization is disabled and the Tone-Clock circuit pack (in the master port network) becomes the synchronization reference for the system. Execute the following steps to resolve this error:

1. Check for timing loops and resolve any loops that exist.
2. Test the active Tone-Clock circuit pack in the master port network via the **test tone/clock PC long** command. Check the Error Log for TDM-CLK errors and verify that TDM Bus Clock Test #148 passes successfully. If Test #148 fails with an Error Code 2 through 32, refer to the TDM-CLK (TDM Bus Clock) Maintenance documentation to resolve the problem. If not, continue with the following steps.
3. Replace the primary and secondary (if administered) DS1 Interface circuit packs.
4. Check for an error logged against the primary or secondary DS1 board. If there is an error, follow the DS1 section to resolve the errors. If there is not, enter **enable sync**, and wait for two to five minutes for the primary sync source to come on-line.

f. This error indicates that the slave Tone-Clock circuit pack is experiencing loss of signal. Refer to note (i) for error resolution steps.

g. The following steps should be executed to resolve error 2049 and 2305:

1. Check for timing loops, and resolve any loops that exist.

2. Error 2049:

   - Test the Tone-Clock circuit packs in the master and slave port networks via the **test tone/clock PC long** command. Check the Error Log for TDM-CLK errors and verify that TDM Bus Clock Test #148 passes successfully. If Test #148 fails with an Error Code 2 through 32, refer to “TDM-CLK” to resolve the problem. If not, continue with the following steps.
   - If the system synchronization reference is a Tone-Clock circuit pack and the master Tone-Clock circuit pack fails TDM Bus Clock Test #150, follow the steps listed in “TDM-CLK” to replace the master Tone-Clock circuit pack.
   - If the system synchronization reference is a DS1 interface circuit pack and the master Tone-Clock circuit pack fails TDM Bus Clock Test #150, the primary or secondary (if administered) synchronization references are not providing valid timing signals for the system. Check the system synchronization references administered, and follow the steps outlined in note (a) if the primary synchronization reference is providing timing for the system or note (c) if the secondary synchronization reference is providing timing for the system.
   - If the slave Tone-Clock circuit pack fails the TDM Bus Clock Test #150 but the master Tone-Clock **does not** fail this test, the master Tone-Clock circuit pack must be replaced. Follow the Tone-Clock replacement steps listed in the “TDM-CLK”.

     If SLIP errors remain follow SLIP ANALYSIS.

3. Error 2305:

   - If the problem persists, replace the Tone-Clock circuit pack in the slave port network. Follow the steps listed in “TDM-CLK” to replace the Tone-Clock circuit pack.

h. Noise on the DS1 line can cause transient alarms on synchronization. Therefore, when a synchronization problem occurs causing error types 1, 257, or 513, a WARNING alarm is first raised for 15 to 20 minutes before the alarm is upgraded to a MAJOR or MINOR alarm.

System Technician-Demanded Tests: Descriptions and Error Codes

Always investigate tests in the order presented in the table below. By clearing error codes associated with the *Test Synchronization Test,* for example, you may also clear errors generated from other tests in the testing sequence.

Order of Investigation	Short Test Sequence	Long Test Sequence	D/ND[1]
Test Synchronization Test (#417)	X	X	ND

1. D = Destructive; ND = Nondestructive

Test Synchronization Test (#417)

This test updates all the Synchronization Maintenance component circuit packs with the correct information regarding their role in providing synchronization for the system. All the Tone-Clock and DS1 Interface circuit packs in the system are updated via this test. This test will either pass or abort.

Table 3-289. TEST #417 Test Synchronization Test

Error Code	Test Result	Description/ Recommendation
	ABORT	Internal system error 1. Retry the command at 1-minute intervals a maximum of 5 times.
	PASS	The Synchronization Maintenance component circuit pack parameters have been successfully updated. The system should be synchronized after successful execution of this test. If synchronization problems still exist, refer to the Error Log to obtain information regarding the source of the problem.

SYS-LINK (System Links)

MO Name (in Alarm Log)	Alarm Level	Initial System Technician Command to Run	Full Name of MO
SYS-LINK	WARNING	test sys-link PCSSpp	SYSTEM LINKS

System Links are packet links that originate at the Packet Interface board and traverse various hardware components to specific endpoints. The hardware components involved on the forward and reverse routes can be different, depending upon the configuration and switch administration. This software release supports one type of link:

PRI ISDN PRI D-Channel Link terminating at a Universal DS1 board

Recording System Link Events

The system links maintenance object is used to record all errors encountered on the links. Most of these events are not extra-ordinary, unless they occur with an alarming frequency. The events are logged as they occur, so as to leave a trail helping analyze abnormal behavior exhibited by the endpoints attached to the links or the links themselves.

When a link goes down, an alarm is raised immediately. A WARNING alarm is raised for the PRI link type. Other alarming conditions which do not cause the link to go down get a WARNING alarm regardless of the link type.

Identifying a System Link

In order to trace problems associated with a system link, it is necessary to find its location. A PRI link can be uniquely identified by its endpoints.

Display Errors/Alarms

The output of the **display errors** or **display alarm** commands shows the location of the system link for entries with a Maintenance Name of SYS-LINK. You can restrict the scope of the output of these commands by specifying category **sys-link** on the input form. The link type, if any, is listed under the Alt Name field.

List sys-link

The command **list sys-link** lists all system links present in the system. The location of the system link and the link type are displayed for each link.

Common Procedure for Repairing Link Problems

The state of a system link is dependent on the state of the various hardware components that it travels over. To resolve any problems associated with a system link, use the following procedure.

The switch maintains a list of hardware components over which the link travels called the hardware path. There are two hardware paths, the current hardware path and the faulted hardware path for each of the system links. The current hardware path is present only for those links that are currently up. When a link is down, the current hardware path is empty. The faulted hardware path, is always present once the link has gone down and is *not cleared when the link subsequently recovers.* The faulted path preserves the path that the link traversed when it last went down. The time at which the faulted path was last recorded is preserved and is accessible via the **status sys-link** location and **list sys-link** commands. Therefore, the focus of attention for problems which do not involve a link that is down, is the current hardware path. If the link is down, faulted hardware path is the focus of attention.

The command **status sys-link** location will present the state of both the hardware paths (current and faulted) along with the state of each of the components in the hardware path. When analyzing any system link problem, look for alarms on the components listed under desired hardware path. If any alarms are present, then follow the maintenance procedures for the alarmed components to clear those alarms first.

When all the components are alarm free, wait for 3 minutes to allow the links to recover. Test the system link via **test sys-link PCSSpp long clear** and notice any tests that fail. If any failures are found, fix the problems indicated by the tests and repeat the procedure.

Error Log Entries and Test to Clear Values

Table 3-290. SYS-LINK Error Log Entries

Error Type	Aux Data	Associated Test	Alarm Level	On/Off Board	Test to Clear Value
13 (a)		System Link Status (985)	WARNING	OFF	
257 (b)			WARNING	OFF	test sys-link PCSSpp l cl
513 (c)			WARNING	OFF	test sys-link PCSSpp l cl
772 (d)			WARNING	OFF	test sys-link PCSSpp l cl
1025 (e)			WARNING	OFF	test sys-link PCSSpp l cl
1281 (f)			WARNING	OFF	test sys-link PCSSpp l cl

Continued on next page

Table 3-290. SYS-LINK Error Log Entries — *Continued*

Error Type	Aux Data	Associated Test	Alarm Level	On/Off Board	Test to Clear Value
1537 (g)			WARNING	OFF	test sys-link PCSSpp l cl
1793 (h)			WARNING	OFF	test sys-link PCSSpp l cl
2049 (i)			WARNING	OFF	test sys-link PCSSpp l cl

Notes:

a. This error indicates that the link went down. The link may have gone down or never come up. Enter command **status sys-link location** and check the value of the field "Faulted Path". If the value is "default", then the link never came up. If the value is "present", then the link came up and went down.

   Follow the Common Procedure described above. Wait for 3 min before checking the link state. Repeat the procedure till there are no problems with the components.

b. This error indicates that the link has experienced uplink flow control. Manifest effect of this error is that the end-point may be hyperactive. The system link is alarmed if 4 or more errors of this type are detected within 10 min.

   To correct the problem, follow the Common Procedure described above. Clear errors and wait for 10 min.

c. This error indicates that the link has experienced downlink flow control. Manifest effect of this error is that some information packets from the packet interface board have been lost. The link is reset on first occurrence, hence, error 1025 will also be logged. The system link is alarmed if 2 or more errors of this type are detected within 10 min.

   To correct the problem, follow the Common Procedure described above. Clear errors and wait for 10 min.

d. This error indicates that the link experienced a temporary disconnect due to excessive resets or state transitions. Manifest effect of this error is that the link is taken down and then brought up again. The system link is alarmed if 2 or more errors of this type are detected within 10 min.

   To correct the problem, follow the Common Procedure described above. Clear errors and wait for 10 min.

e. This error indicates that the link has been reset. Manifest effect of this error is that information packets queued at the time of reset are been lost. The system link is alarmed if 20 or more errors of this type are detected within 10 min.

To correct the problem, follow the Common Procedure described above. Clear errors and wait for 10 min.

f. This error indicates that the link has experienced slow transmit rate due to remote endpoint being busy. Manifest effect of this error is that the end-point location may experience slower throughput rate and/or noisy transmission. The system link is alarmed if 4 or more errors of this type are detected within 10 min.

   To correct the problem, ensure that the remote endpoint is functioning properly. If the problem persists, follow the Common Procedure described above. Clear errors and wait for 10 min.

g. This error indicates that the link has experienced slow transmit rate due to excessive retransmission. Possible causes for this error may be that the switch is overrunning the end-point or that the end-point is sick. Manifest effect of this error is that the end-point location may experience slower throughput rate. The system link is alarmed if 4 or more errors of this type are detected within 10 min.

   To correct the problem, follow the Common Procedure described above. Clear errors and wait for 10 min.

h. This error indicates that the link has experienced slow transmit rate due to unknown causes. Manifest effect of this error is that the end-point location may experience slower throughput rate and the Packet Interface may experience backup or congestion. The system link is alarmed if 4 or more errors of this type are detected within 10 min.

   To correct the problem, follow the Common Procedure described above. Clear errors and wait for 10 min.

i. This error indicates that the link has transmitted an excess amount of packets. The transmit buffers of this link have been purged. The system link is alarmed if 4 or more errors of this type are detected within 10 min.

   To correct the problem, follow the Common Procedure described above. Clear errors and wait for 10 min.

System Technician-Demanded Tests: Descriptions and Error Codes

Testing for system links is different from the standard test procedures for maintenance objects. In addition to testing the system link maintenance object, the user is allowed to test all the components in the path of the system link. There are two paths preserved for the link. The current path, if present, represents the path traversed by the link currently. This path will not be present when the link is down. The other path, the faulted path is present if the link has ever gone down or never come up. If the link came up and went down, then the faulted path is marked "Present". If the link never came up, the faulted path is marked "Default". Either case, it represents the path on which the link was attempted or established unsuccessfully.

Test command for the system links, **test sys-link PCSSpp** can be specified with current or faulted as an optional argument if the user wishes to test all the components in the specified path. The tests executed will be the same if the user were to test each component manually. In the event that the user does not specify any path, then only the tests specified for the system links are executed.

Order of Investigation	Short Test Sequence	Long Test Sequence	D/ND[1]
System Link Status (#985)	X	X	N

1. D = Destructive, ND = Non-destructive

System Link Status (#985)

This test is non-destructive.

This test queries the switch for the status of the system link and verifies that all switch components have the same view of the link state.

Table 3-291. TEST #985 System Link Status

Error Code	Test Result	Description/ Recommendation
1007	ABORT	Could not locate the system link associated with this location 1. Retry the command at 1-minute intervals for a maximum of 5 times.
2500	ABORT	Internal system error 1. Retry the command at 1-minute intervals for a maximum of 5 times.
6	FAIL	The system link is down. 1. Follow the procedure for error type 13.
	PASS	The system link is up.

SYS-PRNT (System Printer)

MO Name (in Alarm Log)	Alarm Level	Initial Command to Run	Full Name of MO
SYS-PRNT	MINOR	test sp-link l	System Printer
SYS-PRNT	WARNING	release sp-link	System Printer

The Report Scheduler feature provides the capability to schedule selected administration commands to be printed by an asynchronous System Printer (SYS-PRNT) or sent to a Personal Computer (PC). The System Printer Link to this external device can be administered either as a data extension or to the EIA port on the switch Processor (PROCR) circuit pack which provides a standard EIA 232C interface.

System Printer Link Maintenance provides a strategy for maintaining the link between the system and an external SYS-PRNT output device. The strategy includes a set of tests for detection of errors during normal operation, troubleshooting actions, and alarms for serious problems. System Printer Link Maintenance uses a try-and-wait mechanism for maintaining the SYS-PRNT link. If the link set-up fails, a minor alarm is raised for service attention. A warning alarm is raised when the SPE has been busied out. A maximum of two link retry attempts is made. After the second attempt, set-up attempts are only made by the application software (that is, the 15-minute timer fires and jobs are printed unless an immediate job was entered.) After two unsuccessful attempts to establish the link, a MINOR alarm is raised for service attention. If the System Printer Link is torn down due to an error, System Printer Link Maintenance raises a MINOR alarm but does not attempt to bring up the System Printer Link.

In DEFINITY Generic 1, the following physical configurations are supported for the System Printer Link:

a. from the EIA port on the Processor circuit pack to a SYS-PRNT output device via the standard EIA 232C interface

b. from a data channel (DATA-CHL) on the Network Control circuit pack (DATA-BD) to a data extension where the SYS-PRNT output device connects via the standard EIA 232C interface

The data extension can be a(n) PDM, MPDM, DTDM, or ADU. The PDM, MPDM, or DTDM connects to a Digital Line (DIG-LINE) on the TN754 or TN754B Digital Line circuit pack (DIG-BD); the ADU connects to a Data Line (DAT-LINE) of the TN726 Data Line circuit pack (DT-LN-BD).

System Printer Link Maintenance does not cover the elements comprising the SYS-PRNT physical link; that is, the external SYS-PRNT output device, the EIA port on the Processor circuit pack, the Data Module (PDM/MPDM/DTDM) and the Digital Line of TN754 or TN754B Digital Line circuit pack, the ADU and the Data Line of TN726 Data Line circuit pack, and the data channels on the TN798 Processor circuit pack. If System Printer Link Maintenance cannot restore the

System Printer Link, the maintenance tests of these individual components of the System Printer Link must be executed to diagnose faults.

Procedures for Restoring the System Printer Link

The following procedures should be followed to restore the System Printer Link:

1. Determine the status of the System Printer Link via the **status sp-link** command. Verify that the System Printer Link is not busied out for maintenance. On the System Printer Link Status Form, this is indicated by a "no" in the "Maintenance Busy?" field. If the System Printer Link has been busied out, issue the **release sp-link** command. If the link is "down," proceed to Step 2.

2. Issue the **display system feature** command to determine the destination of the System Printer Link.

   If the destination is an *extension number*, enter the **status data-module <extension>** command and verify that the data extension is in-service/idle. If the data extension is NOT available, refer to the "Port/Channel Number" field on the "Data-Module Status" Form. Look for errors and/or alarms on the circuit pack with which this extension is associated. Refer to the appropriate MO documentation for recommended repair strategy. Continue with Step 3.

   If the destination is *eia*, look for PR-MAINT errors in the Hardware Error Log. If errors are present, refer to Maintenance/Tape Processor Maintenance documentation, and continue with Step 5.

3. Determine if a data channel on the Network Control circuit pack is in-service/idle as follows:

   a. Use the **list data-module** command to find out the extension numbers of the data channels on the Network Control circuit pack. (There is a maximum of 4. They are listed as "netcon" on the Active SPE. Ignore the Standby data channels.)

   b. Enter the **status data-module <extension>** command to verify that at least one Active data channel is in-service/idle.

4. If four data channels are administered and none are available, then look for DATA-CHL/DATA-CON/DATA-BD errors in the Hardware Error Log. If errors are present, refer to these MO sections for recommended maintenance strategy. When problems (if any) with DATA-CHL/DATA-CON/DATA-BD have been resolved, continue with Step 5.

   If fewer than four data channels are administered, then use the **add data-module** command to add a network control data module to the system.

5. Verify the availability of the external SYS-PRNT output device as follows:

Make sure that the SYS-PRNT output device is *on-line* and ready-for-service. Check the physical connectivity between the Data Module and the SYS-PRNT output device or between the EIA port on the backplane of the switch and the SYS-PRNT output device.

6. Verify that there are less than three active logins to the system. If this condition exists, a login session must be terminated before the System Printer Link can be established.

NOTE:
It is recommended that the System Printer Link be busied out before executing maintenance tests over objects which compose the System Printer Link. If the System Printer Link is busied out, then all System Printer Link maintenance actions are deactivated.

Error Log Entries and Test to Clear Values

Table 3-292. SYS-PRNT Maintenance Error Log Entries

Error Type	Aux Data	Associated Test	Alarm Level	On/Off Board	Test to Clear Value
0[1]	0	Any	Any	Any	test sp-link
18 (a)	0	busyout sp-link	WARNING	OFF	release sp-link
257 (b)	1 to 6	Link Retry Test (#215)	MINOR/ WARNING[2]	OFF	test sp-link l
513 (c)	0	None	MINOR	OFF	test sp-link

1. Run the Short Test Sequence first. If all tests pass, run the Long Test Sequence. Refer to the appropriate test description and follow the recommended procedures.
2. Minor alarms on this MO may be downgraded to Warning alarms based on the value used in the **set options** command.

Notes:

a. System Technician has busied out the System Printer Link.

b. A failure was encountered while attempting to set up the System Printer Link. This attempt could have been initiated by either the Report Scheduler software or link maintenance [automatic link retry or the as the result of a Link Retry Test (#215) request]. The Aux Data field contains the following diagnostic information to aid in the correction of the failure:

   1. unavailability of system resources (too many active logins to the system).

   2. no data channels (DATA-CHLs) available on the Network Control circuit pack (DATA-BD).

3. 4- time-out during setup attempt. Most likely due to problem with physical link or printer status.
4. internal system error. Most likely temporary/sporadic failure.
5. the data module the printer is trying to use is busy with another call. Use the **Status data module** command to determine when the port is available for testing.

Refer to the "Procedures for Restoring the System Printer Link" section for recommended maintenance strategy.

c. The SYS-PRNT was interrupted because of one of the following reasons:

1. the cable to the SYS-PRNT output device is disconnected;
2. the SYS-PRNT output device is powered off;
3. the data extension to which the SYS-PRNT output device connects has been busied out;
4. internal software error.

Check the connectivity of the wires and cables among the wall jacket, data module, and SYS-PRNT output device. Follow the instructions provided in the "Procedures for Restoring the System Printer Link" section.

System Technician-Demanded Tests: Descriptions and Error Codes

When inspecting errors in the system and deciding which ones to address, always investigate errors in the order they are presented in the table below. By clearing error codes associated with the *Link Retry Test*, for example, you may also clear errors generated from other tests in the testing sequence.

Order of Investigation	Short Test Sequence	Long Test Sequence	D/ND[1]
Link Tear Down Test (#213)		X	D
Link Retry Test (#215)	X	X	ND
Link Tear Down Test (#213)	X	X	ND

1. D = Destructive; ND = Nondestructive

Link Tear Down Test (#213)

This test is destructive.

The Link Tear Down Test disconnects the existing link between DEFINITY Generic 1 and the external SYS-PRNT output device. If the link has been disconnected already, this test just returns PASS. All resources allocated for a System Printer Link are released after this test.

Table 3-293. TEST #213 Link Tear Down Test

Error Code	Test Result	Description/ Recommendation
40, 50	ABORT	Internal system error 1. Retry the command at 1-minute intervals a maximum of 2 times.
1010	ABORT	The System Printer Link has been busied out. 1. Enter the **release sp-link** command to release the System Printer Link from the busyout state. 2. Reissue the **test sp-link long** command to execute the test.
	FAIL	Internal system error 1. Retry the command at 1-minute intervals a maximum of 2 times.
	PASS	The System Printer Link is torn down or a Short Test Sequence was executed and the link was not torn down.

Link Retry Test (#215)

The Link Retry Test sends a message to the SYS-PRNT software process either (1) to make a data call to the extension to which the SYS-PRNT output device connects OR (2) to open the EIA port to the SYS-PRNT output device. If the System Printer Link is already up, this test passes without making a data call or opening the EIA port.

Table 3-294. TEST #215 Link Retry Test

Error Code	Test Result	Description/ Recommendation
10, 20	ABORT	Internal system error 1. Retry the command at 1-minute intervals a maximum of 2 times.

Continued on next page

Table 3-294. TEST #215 Link Retry Test — *Continued*

Error Code	Test Result	Description/ Recommendation
30	ABORT	Internal system error 1. Refer to the "Procedures for Restoring the System Printer Link" section for recommended maintenance strategy.
1010	ABORT	The System Printer Link has been busied out. 1. Enter the **release sp-link** command to release the System Printer Link from the busyout state. 2. Reissue the **test sp-link long** command to execute the test.
	FAIL	The System Printer Link CANNOT be established. 1. Refer to the "Procedures for Restoring the System Printer Link" section for recommended maintenance strategy.
	PASS	The System Printer Link is up.

SYSTEM (System)

MO Name (in Alarm Log)	Alarm Level	Initial Command to Run[1]	Full Name of MO
SYSTEM	None	None	SYSTEM

1. SYSTEM only has errors associated with it and thus only appears in the Error Log and not in the Alarm Log. There are no tests that can be run with SYSTEM.

SYSTEM is generally used when software encounters a problem with either hardware or itself and requests a restart to clear the problem. SYSTEM also logs errors that cannot be associated with any single process. This is not a problem. The initcauses log should also confirm that a software-requested restart was performed.

Error Log Entries and Test to Clear Values

The Aux Data field may be 0 or the return code from a bad software call, and the following examples in no way exhaust the possibilities. Often, two errors are logged at the same time for each problem.

Table 3-295. System Error Log Entries

Error Type	Aux Data	Associated Test	Alarm Level	On/Off Board	Test to Clear Value
0[1]	0	Any	Any	Any	None
8 (a)	0	None			
9 (b)	Any	None			
10 (c)	Any	None			
21 (d)		None			
355 (e)	Any	None			
356 (f)	Any	None			
601 (g)		None			
602 (h)		None			
603 (i)		None			

1. Run the Short Test Sequence first. If all tests pass, run the Long Test Sequence. Refer to the appropriate test description and follow the recommended procedures.

Notes:

a. A System Restart Level 3 was requested.

b. A System Restart Level 2 was requested. This can happen due to a loss of tones (due to a faulty Tone-Clock circuit pack).

c. A System Restart Level 1 was requested.

d. A process trapped.

e. A Restart Level 2 occurred due to a power loss.

f. A Restart Level 2 occurred due to a tone clock loss.

g. An error occurred during initialization.

h. An error occurred while loading translations and the system requested a Restart Level 3.

i. A process was reset.

TBRI-BD (TN2185 ISDN Trunk-Side BRI)

MO Name (in Alarm Log)	Alarm Level	Initial Command to Run [1]	Full Name of MO
TBRI-BD	MINOR	test board PCSS l r#	TBRI-BD

1. Where P is the port network number (1), C is the carrier designation (A, B, or C), and SS is the the carrier slot address where the circuit pack is located (1, 2, and so forth).

The TN2185 circuit pack contains eight, 4-wire ports that interface to the network at the ISDN S/T reference point over two 64 Kb/s channels (B1 and B2) and over a 16Kb/s signaling (D) channel. The B1 and B2 channels can be simultaneously circuit switched, or individually packet switched. Only one channel per trunk can be packet switched due to Packet Processing Element (PPE) limitations. The D channel is either circuit switched or packet switched. Packet switching uses the PPE to combine all D channels into a single physical channel, which is then routed via the concentration highway to the Network Control Element (NCE) and then to the TDM bus. The circuit-switched connections have a Mu-law or A-law option for voice and operate as 64Kb/s clear data channels. The packet-switched channels support the LAPD protocol and conform with the CCITT Q.920 Recommendations for D-channel signaling.

LEDs

The three LEDs on the circuit pack's faceplate indicate board status. When illuminated, the red LED indicates a board failure or a major or minor on-board alarm, the green LED indicates that testing is in progress, and the amber LED indicates that the board is in use.

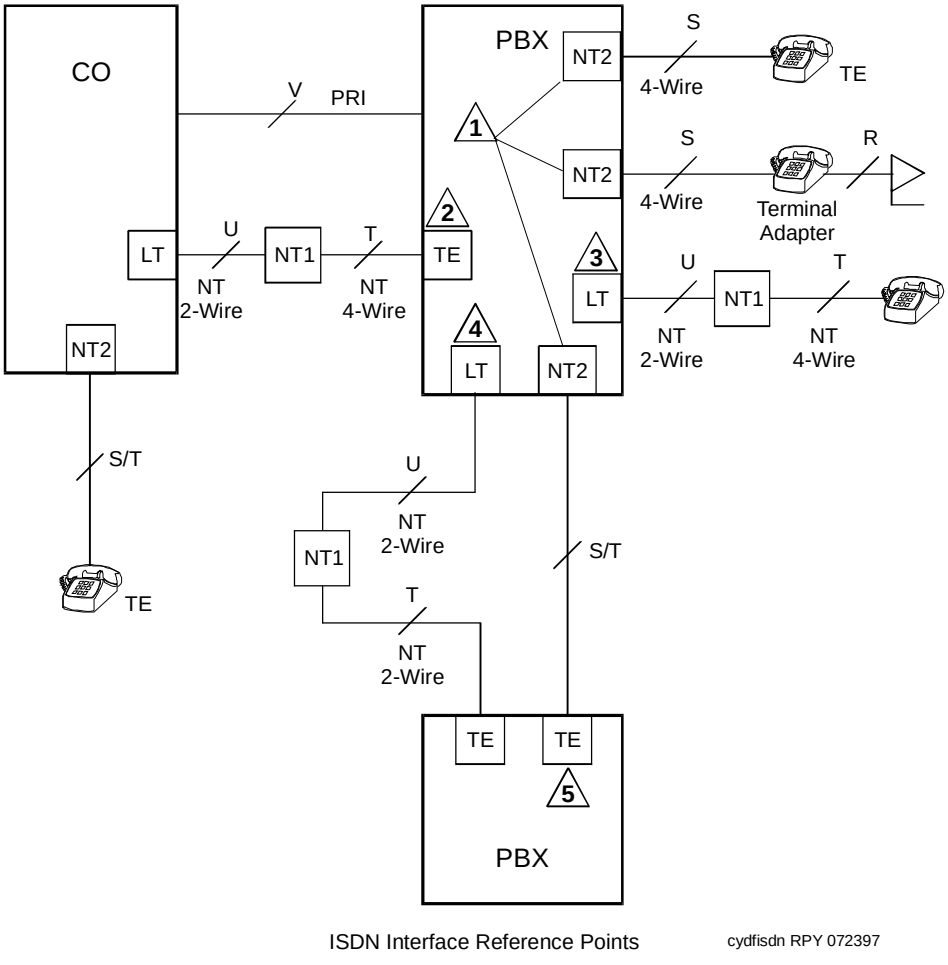

Figure 3-28. Integrated Trunk-Side BRI, ISDN Interface Reference Points

ISDN Interface Reference Point definitions:

LT	Logical Terminal
V	Primary Rate user/network (asymmetrical) trunk interface. The ECS is capable of acting as the user or as the network side of this 1.544 - or 2.048-Mbps interface.
R	Interface between Terminal Equipment and Network Termination
S	Basic Rate network-side 4-wire line interface
S/T	4-wire Basic Rate connection to a Network Termination[1].
T	4-wire Basic Rate interface to a Network Termination.[2]
TE	Terminal Equipment

U Basic Rate network-side 2-wire line interface.

1 TN2185 ISDN-BRI 4-Wire S Interface (Trunk Side); Release 6.1 only

2 TN2185 ISDN-BRI 4-Wire S Interface (Trunk Side)

3 No 2-Wire ISDN-BRI circuit pack for Release 6.1

4 TN2185 ISDN-BRI 4-Wire S Interface (Trunk Side)

5 TN2185 ISDN-BRI 4-Wire S Interface (Trunk Side)

1. Network Termination 2 (NT2), that terminates Layer 1 and higher layers. PBXs, LANs, and terminal controllers typically provide NT2 functionality including protocol handling and multiplexing for Layers 2 and 3.
2. Network Termination 1 (NT1), that terminates Layer 1 and monitors maintenance, performance, timing, power transfer, multiplexing, and multi-drop termination with contention resolution.

Hardware Error Log Entries and Test to Clear Values

Table 3-296. TBRI-BD Error Log Entries

Error Type	Aux Data	Associated Test	Alarm Level	On/Off Board	Test to Clear Value
0[1]	0	Any	Any	Any	test board PCSS sh r 1
1 (a)	Any	None	MINOR	ON	
257 (b)	65535	Control Channel Loop Test (#52)	MINOR	ON	test board PCSS r 20
513 (c)	4352 to 4357		None	ON	
769 (d)	4358				
1025 (e)	4363	NPE/NCE Audit Test (#50)	None	ON	
1291 (f)	4359	Clear Error Counters (#270)	MINOR	ON	
1294 (g)	46088 to 46096	SAKI Sanity Test (#53)	MINOR	ON	See (h)
1537 (h)	46082		MINOR	ON	
1793 (i)	46080		MINOR	ON	
1794 (i)	46094		MINOR	ON	

Continued on next page

Table 3-296. TBRI-BD Error Log Entries — *Continued*

Error Type	Aux Data	Associated Test	Alarm Level	On/Off Board	Test to Clear Value
1795 (i)	46085		MINOR	ON	
2305 (j)	46104		None	ON	
2306 (i)	46081		None	ON	
3330 (j)	46083		MINOR	OFF	
3586 (k)			MINOR	OFF	
3840(l)	4096 to 4101				
3842 (m)	46095				
3843 (n)	46097				

1. Run the Short Test Sequence first. If all tests pass, run the Long Test Sequence. Refer to the appropriate test description and follow the recommended procedures.

Notes:

a. The circuit pack stopped functioning or is physically removed from the system.

NOTE:
This alarm logs approximately 11 minutes after removing the circuit pack and/or the SAKI Sanity Test (#53) fails.

If the circuit pack is not in the system, insert a circuit pack in the same slot as the error indicates. See note (g).

b. Transient communication problems between the switch and this circuit pack. Execute the **test board PCSS** command and refer to the repair procedures for the Control Channel Loop Around Test (#52).

c. On-board hardware failure. Aux data values correspond to the following detected errors:

4352	External RAM error
4353	Internal RAM error
4355	ROM Checksum error
4357	Instruction set error

Reset the circuit pack with the **busyout board PCSS** and **reset board PCSS** commands. When reset, the circuit pack executes a set of tests to detect the presence of any of the faults listed above. Detection of one of these errors during initialization causes the circuit pack to lock-up and appear insane to the system. See the repair procedure in Note (a).

d. The circuit pack detects a program logic error. While no action is required, this error can lead to other errors against this circuit pack.

e. The circuit pack cannot update and read back NPE/NCE memory. This error can be ignored, but may lead to other errors against this circuit pack.

f. The TN2185 board notifies maintenance software that it has detected a parity error while accessing its dynamic RAM (that stores the board's translation information and downloadable application firmware). Maintenance software resets the circuit pack.

g. Unable to write LAN Translation RAM Error (internal memory access error). Translation RAM locations for the call connection attempt are not available, and one or more RAM locations are bad due to a translation RAM read-back error. Reset the circuit pack with the **busyout board PCSS** and **reset board PCSS** commands. If the Circuit Pack Restart Test (#594) passes, then the on-board circuitry is healthy. Retire the alarm with the **test board PCSS long clear** command. If the Circuit Pack Restart Test (#594) fails, replace the circuit pack.

h. Frame overrun at Packet Bus interface. Due to an on-board fault or by faulty data received on one of the circuit pack's external ports. If any of the ports on this circuit pack is alarmed, refer to the repair procedures for those maintenance objects. If this error persists, maintenance software removes the board from service; replace the circuit pack.

i. The circuit pack is has problems transmitting/receiving data to/from the Packet Bus.

1793	Parity errors are detected when transmitting data to the Packet Bus.

1794 Packet Bus transmit buffers overflow.

1795 Circuit pack cannot find end of frame when transmitting to Packet Bus. Clear the alarm with: **busyout board PCSS**, **reset board PCSS**, **test board PCSS long clear**, **release board PCSS**. If the error recurs within 10 minutes, replace the circuit pack.

2306 Error in a received frame from the Packet Bus, most likely caused by a packet bus problem, but may be due to a circuit pack fault. An invalid Link Access Procedure Data (LAPD) frame error occurs if the frame contains a bad Cyclical Redundancy Check (CRC). If bus parity errors occur, run the LAN Receive Parity Error Counter Test (#595) to determine if the condition has cleared. Refer to the maintenance documentation to determine if the problem is isolated to this circuit pack or is caused by Packet Bus faults.

j. Error Type (2305, 3330): A critical failure in the Circuit Pack's Packet Bus interface. Possible causes include either a Packet Bus fault or an on-board fault, for example, the board received a bad CRC or invalid DLCI. The number of ISDN circuit packs displaying this error increases the probability of errors due to Packet Bus problems.

   If there are no Packet Bus alarms, reset the circuit pack with the **busyout board PCSS** and **reset board PCSS** commands. If the Circuit Pack Restart Test (#594) passes, then the on-board circuitry is healthy. Retire the alarm with the **test board PCSS long clear** command. If the Circuit Pack Restart Test (#594) fails, replace the circuit pack.

k. The SPE software detects an excessive number of up-link messages from the TN2185 board within a certain time period. To prevent the faulty board from flooding the switch with data, the switch software takes the board out of service and alarms it. The switch software also tells the Archangel to ignore up-link messages from the board.

   When the board is alarmed due to this error, the switch software periodically puts the board back in service and tells the Archangel to process up-link messages from the board. If the problem still exists, the software takes the circuit pack out of service again. If the circuit pack does not exhibit the problem for a certain time period, then maintenance software resolves the alarm and the circuit pack is left in service.

l. The circuit pack received an inconsistent down-link message (a bad header, bad port number, bad data, bad subqualifier, or bad logical link) over the Control Channel.

m. The board is receiving data from the bus faster than it can distribute the data to its endpoints, causing the FIFO RAM buffer to overflow. This error can occur occasionally due to the statistical sizing of the buffers. If it

occurs frequently, it may indicate a LAPD parameter mismatch. LAPD should recover from this problem, but it may degrade the performance of the LAN bus.

When this error is reported, maintenance reads and clears the board counter and logs the problem in the maintenance error log.

n. Bad translation RAM detected, but the call continues by using another translation location. The circuit pack reports this error when it cannot update NPE/NCE memory and read it back. This error is not service-affecting and can be ignored, but can lead to other types of errors against this circuit pack.

System Technician-Demanded Tests: Descriptions and Error Codes

When inspecting errors in the system, always investigate tests in the order listed below. By clearing error codes associated with the *Control Channel Loop Around Test,* for example, you may also clear errors generated from other tests in the testing sequence.

Order of Investigation	Short Test Sequence	Long Test Sequence	D/ND[1]
Control Channel Loop-Around Test (#52)	X	X	ND
NPE/NCE Audit Test (#50)		X	ND
LAN Receive Parity Error Counter Test (#595)		X	ND

1. D = Destructive; ND = Nondestructive

Control Channel Loop Around Test (#52)

Refer to the repair procedure described in the "XXX-BD (Common Port Circuit Pack)" section.

NPE /NCE Audit Test (#50)

Refer to the repair procedure described in the "XXX-BD (Common Port Circuit Pack)" section.

SAKI Sanity Test (#53)

This test is destructive.

Refer to the repair procedure described in the "XXX-BD (Common Port Circuit Pack)" section. This test is only run as a part of a reset board procedure.

LAN Receive Parity Error Counter Test (#595)

This test is nondestructive. The test reads and clears the circuit pack's LAN Receive Parity Error Counter. This counter increments when it detects a parity error from the Packet Bus. These errors may indicate problems with a circuit pack, Packet Bus, or with another circuit pack on the bus. Use this test to verify the repair.

Table 3-297. TEST #595 LAN Receive Parity Error Counter Test

Error Code	Test Result	Description/ Recommendation
2000	ABORT	Response to the test was not received from the circuit pack within the allowable time period. 1. If the test aborts repeatedly a maximum of 5 times, reset the circuit pack via the **busyout board PCSS** and **reset board PCSS** commands. 2. If the test aborts again, replace the circuit pack.
2100	ABORT	Could not allocate the necessary system resources to run this test.
2012	ABORT	Internal system error. 1. Retry the command at 1-minute intervals a maximum of 5 times.
1-10	FAIL	The circuit pack is still detecting errors of this type. The error code indicates the value of the on-board error counter. 1. Retry the command at 1-minute intervals a maximum of 5 times. 2. If the test continues to fail, verify the validity of the Packet Bus. Run the Packet Bus maintenance test with the **test pkt P long** command. 3. If the Packet Bus test passes, check the validity of the circuit pack. Execute a test that involves data transmission onto the Packet Bus. For example, the **test port PCSSpp** command may use the connectivity tests of the BRI-PORT maintenance object. If the test fails, refer to the repair procedures; otherwise, proceed to the next step. 4. Other circuit packs on the Packet Bus may be causing of the parity error. Use the **display errors** command to check the Error Log for alarmed other circuit packs. Resolve any alarms for other circuit packs as well. Rerun the LAN Receive Parity Error Counter Test (#595).
	PASS	No errors detected.

TBRI-PT (TN2185 ISDN Trunk-Side BRI Port)

MO Name (in Alarm Log)	Alarm Level	Initial Command to Run[1]	Full Name of MO
TBRI-PT	MAJOR	test port PCSS l r#	TBRI-PT
TBRI-PT	MINOR	test port PCSS l r#	TBRI-PT
TBRI-PT	WARNING	test port PCSS s r#	TBRI-PT

1. Where P is the port network number (1), C carrier designation (A, B, or C), and SS is the carrier slot address where the circuit pack is located (1, 2, and so forth).

This document describes the port maintenance features of the DEFINITY® ISDN Trunk-side BRI board (TN2185). The circuit pack provides 8 S/T ISDN 2B+D ports which interface to either the central office or another PBX.

The TN2185 circuit pack contains eight, 4-wire ports that interface to the network at the ISDN S/T reference point over two 64 Kb/s channels (B1 and B2) and over a 16Kb/s signaling (D) channel. The B1 and B2 channels can be simultaneously circuit switched, or individually packet switched. Only one channel per trunk can be packet switched due to Packet Processing Element (PPE) limitations. The D channel is either circuit switched or packet switched. Packet switching uses the PPE to combine all D channels into a single physical channel, which is then routed via the concentration highway to the Network Control Element (NCE) and then to the TDM bus. The circuit-switched connections have a Mu-law or A-law option for voice and operate as 64Kb/s clear data channels. The packet-switched channels support the LAPD protocol and conform with the CCITT Q.920 Recommendations for D-channel signaling.

LEDs

The three LEDs on the circuit pack's faceplate indicate board status. When illuminated, the red LED indicates a board failure or a major or minor on-board alarm, the green LED indicates that testing is in progress, and the amber LED indicates that the board is in use.

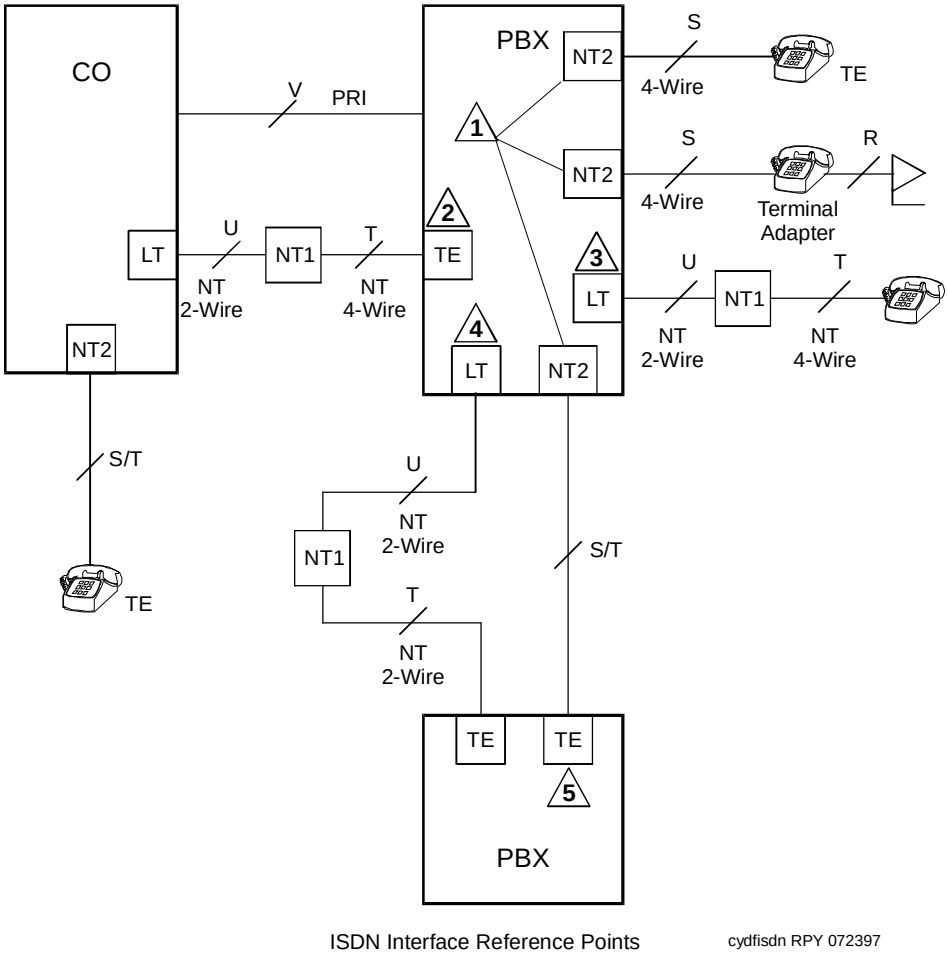

Figure 3-29. Integrated Trunk-Side BRI, ISDN Interface Reference points

ISDN Interface Reference Point definitions:

LT	Logical Terminal
V	Primary Rate user/network (asymmetrical) trunk interface. The ECS is capable of acting as the user or as the network side of this 1.544 - or 2.048-Mbps interface.
R	Interface between Terminal Equipment and Network Termination
S	Basic Rate network-side 4-wire line interface
S/T	4-wire Basic Rate connection to a Network Termination[1].
T	4-wire Basic Rate interface to a Network Termination.[2]
TE	Terminal Equipment

U Basic Rate network-side 2-wire line interface.

1 TN2185 ISDN-BRI 4-Wire S Interface (Trunk Side); Release 6.1 only

2 TN2185 ISDN-BRI 4-Wire S Interface (Trunk Side)

3 No 2-Wire ISDN-BRI circuit pack for Release 6.1

4 TN2185 ISDN-BRI 4-Wire S Interface (Trunk Side)

5 TN2185 ISDN-BRI 4-Wire S Interface (Trunk Side)

1. Network Termination 2 (NT2), that terminates Layer 1 and higher layers. PBXs, LANs, and terminal controllers typically provide NT2 functionality including protocol handling and multiplexing for Layers 2 and 3.
2. Network Termination 1 (NT1), that terminates Layer 1 and monitors maintenance, performance, timing, power transfer, multiplexing, and multi-drop termination with contention resolution.

Hardware Error Log Entries and Test to Clear Values

Table 3-298. TBRI-PT Error Log Entries

Error Type	Aux Data	Associated Test	Alarm Level	On/Off Board	Test to Clear Value
0[1]	0	Any	Any	Any	test Port UCSSPP sh r 1
1 (a)		Level 1 Status Test (#1242)	MINOR	OFF	
129[2]					
257(b)					
513 (c)	46222	XMIT FIFO Overflow	MINOR	ON	
514 (d)		XMIT FIFO Overflow (TDM)	MINOR	ON	
769 (e)		Traffic Hyperactivity	MINOR	OFF	
1025 (f)					
1281 (g)		NPE Crosstalk Test (#617)	MINOR	ON	
1537 (h)	46210	CRC error (D-Channel)	MINOR	OFF	
1538 (i)		CRC error (TDM D-Channel)	MINOR	OFF	

Continued on next page

Table 3-298. TBRI-PT Error Log Entries — *Continued*

Error Type	Aux Data	Associated Test	Alarm Level	On/Off Board	Test to Clear Value
1793 (j)		BRI Port Local TDM Looparound Test (#619)	MINOR	ON	
2049 (k)			MINOR	OFF	
2305 (l)		Layer 3 Query (#1243)	MINOR	OFF	
3073 (m)		Slip Query Test (#1244)	MINOR	OFF	
3585 (n)		Receive FIFO Overflow (TDM D-Channel)	Log Only	ON	
3586 (o)					
3587 (p)					
3588 (q)	46223				
3589 (r)					
3590 (s)	46211				
3591 (t)					
3592 (u)					
3841 to 3942 (v)					

1. Run the Short Test Sequence first. If all tests pass, run the Long Test Sequence. Refer to the appropriate test description and follow the recommended procedures.
2. The far-end switch changed the ISDN service state. This may be a temporary condition.

Notes:

a. Loss of continuity of Layer 1 to the far-end. It is assumed that Layer 1 remains active, even when both B-Channels are idle.

   This test determines whether Layer 1 is active or not. If Layer 1 is not active, the test attempts to activate it. If Layer 1 cannot be activated, the port is taken out of service, and the test fails.

b. The D-Channel failed at Layer 2. Expiration of this timer indicates that attempts to bring the failed link back into service have not succeeded and some recovery actions should be taken on the associated B-Channels. Upon expiration, associated in-service B-channels are put in the out-of-service/far end state.

c. Error Type (513): On-board hardware failure. The FIFO RAM buffers have overflowed, indicating a hardware problem.

d. Error Type (514): Transmit FIFO Overflow - This error indicates that the circuit pack is having problems transmitting data to the TDM D-Channel. This error only occurs only a system that switches the packet implementation of the D-channel over the TDM Bus. This error indicates an on board problem related to the packet implementation of the D-Channel (R6.2 and higher).

e. Error Type (769): The port is generating too many uplinks. The link is being suspended.

f. Error Type (1025): An expired timer has created an unexpected event. The timer could be any of the following:

Timer	Event
T3031	ISDN T3031 timeout
T3032	ISDN T3032 timeout
T305	ISDN T305 timeout
T3081	ISDN T3081 timeout
T3082	ISDN T3082 timeout
TL3	Status Inquiry
T304	Setup ACK
T310	Call Proceeding Receive
T313	Connect SEND

g. Error Type (1281): This error occurs when the NPE Crosstalk Test (#617) has failed. The test will be repeated every 15 minutes until it passes. Follow normal trouble shooting procedures for NPE Crosstalk Test (#617). If this does not fix the problem, follow normal escalation procedures.

h. Error Type (1537): The board received a bad Cyclical Redundancy Check (CRC) over the D-Channel. This error is reported on a per-port basis. When the CRC errors exceed 5 within 15 minutes, the port is taken out of service for 5 seconds. If 5 more CRC errors are received within 15 minutes of the first set of 5 errors, the port is taken out of service for 1 minute. If 5 more CRC errors are received within 15 minutes of the previous 5, the port is taken out of service for 15 minutes.

This error is most likely due to a problem with backplane wiring, a noise source, or no termination (an open circuit). It usually does not indicate a problem with the circuit pack.

1. Check the backplane wiring.
2. If the problem persists escalate the problem.

i. Error Type (1538): This error occurs when a frame with a bad CRC is received by the BRI trunk board. This error only occurs on a system that switches the packet implementation of the D-channel over the TDM bus. This error indicates an off board problem related to the packet implementation of the TDM D-Channel (R6.2 and later).

j. Error Type (1793): The BRI Port Local TDM Loop Around Test (#619) failed. Run the Long Test Sequence paying particular attention to the results of the BRI TDM Port Loop Test (#619).

k. Error Type (2049): The Layer 2 Link Query failed. The test is repeated every 15 minutes until it passes.

l. Error Type (2305): The Remote Layer 3 Query failed. The test is repeated every 15 minutes until it passes.

m. Error Type (3073): A frame of information had to be repeated or deleted. Slips usually occur when the received bit rate is not synchronized with the TDM Bus clock.

n. Error Type (3585): The circuit pack detected an overflow of its receive buffers. This error occurs only a system that switches the packet implementation of the D-Channel over the TDM bus. This error indicates an on board problem related to the packet implementation of the TDM D-Channel (R6.2 and higher).

o. Error Type (3586): Each port can support up to three Terminal Endpoint Identifiers (TEIs). Each channel on the port can request a TEI assignment from the switch if it supports ISDN-BRI TEI assignment procedures. If switch services gets a request for a fourth TEI on a port, it reports this event to maintenance software and initiates TEI check procedures on the port. Check to see if the correct number of channels are administered for this port.

   The user side supports automatic TEI assignment by the network. Both fixed and automatic TEI assignment are supported on the network side.

p. Error Type (3587)Service Profiler IDentifier (SPID) value is invalid or is a duplicate of another SPID that is already initialized at Layer 3 on the port. SPIDs are not used on the TN2185 circuit pack. However there will be related events.

q. Error Type (3588): The board receives D-Channel data from the bus faster than it can process the data. The FIFO RAM buffers overflowed. This error occurs occasionally due to the statistical sizing of the buffers; however, frequent occurrences may indicate a LAPD parameter mismatch between the two endpoints of a packet-switched connection. Run the Long Test Sequence paying particular attention to the results of the Receive FIFO Overflow Test (#625).

r. Error Type (3589): The BRI Port Local LAN Loop Around Test (#618) failed. Run the Long Test Sequence and pay particular attention to the results of Test #618.

s. Error Type (3590): An activated BRI port receives a frame containing a DLCI over a D-Channel for which it does not have a translation. This error normally indicates an off-board problem related to a state mismatch between the far-end and the switch. This error is logged only.

t. Error Type (3591): The port is generating too many uplinks and is taken out of service.

u. Error Types (3841-3942): Table 3-299 contains the received ISDN cause values for Errors 3841-3942 that are recorded in the hardware error logs. Unless otherwise stated, the cause values are D-Channel events. The aux data field shows which port caused the error.

Table 3-299. Cause Values for Error 3841-3942

Value	Type of Problem	Meaning
2	admin	No route to specific transit network
3	admin	No route to destination (or Germany bcap not imp)
6	admin	Channel unacceptable
18	switch problems	No user responding
38	switch problems	Network failure
50	subscription	Requested facility not subscribed
52	admin	Outgoing calls barred
54	admin	Incoming calls barred
62	subscription	Service not authorized
63	admin/sub	Service/option not available
65	admin/sub	Bearer capability not implemented
66	admin/sub	Channel type not implemented
69	admin/sub	Requested facility not implemented
70	admin/sub	Only restricted digital BC available
79	admin	Service/option not implemented
88	admin	Incompatible destination
102	switch problems	Recovery on timer expired

System Technician-Demanded Tests: Descriptions and Error Codes

When inspecting errors in the system, always investigate tests in the order listed below. By clearing error codes associated with the *Control Channel Loop Around Test,* for example, you may also clear errors generated from other tests in the testing sequence.

Order of Investigation	Short Test Sequence	Long Test Sequence	D/ND[1]
BRI Local LAN Port Loop Around Test (#618)		X	D
BRI TDM Port Loop Around Test (#619)		X	D
L1 State Query Test (#1242)	X	X	D
CRC Error Counter Test (#623)		X	ND
Receive FIFO Overflow Test (#625)		X	ND
Layer 3 Query Test (#1243)		X	ND
Slip Query Test (#1244)	X	X	ND
Clear Error Counters Test (#270)	X	X	ND
NPE Crosstalk Test (#617)		X	D

1. D = Destructive; ND = Nondestructive

Clear Error Counters Test (#270)

This test is nondestructive. This test clears the various error counters associated with each TBRI-PT. This test passes if Maintenance is able to sucessfully send the downlink messages; otherwise, the test aborts.

Table 3-300. TEST #270 Clear Error Counters

Error Code	Test Result	Description/ Recommendation
Any	ABORT	Maintenance could not send the downlink message.
	PASS	The message to clear the error counters of the TBRI-PT maintenance object has been sent.

NPE Crosstalk Test (#617)

This test is conditionally destructive.

One or more NPEs reside on each circuit pack with a TDM Bus interface. The NPE controls port connectivity and gain and provides conferencing functions on a per-port basis. The NPE Crosstalk Test verifies that this port's NPE channel talks on the selected time slot and never crosses over to time slots reserved for other connections. If the NPE is not working correctly, one-way and noisy connections may be observed. This test is part of a port's Long Test Sequence and takes approximately 20 to 30 seconds to complete. Crosstalk testing is performed on both B-channels (B1 and B2) associated with a BRI port. If this test fails on either channel, any channel connected to the port is taken out-of-service. The test aborts if the port and its associated channels are not in the idle state.

Table 3-301. TEST #617 NPE Crosstalk Test

Error Code	Test Result	Description/ Recommendation
1000	ABORT	System resources required to run this test are not available. The port may be busy with a valid call. Use the **display port PCSSpp** command to determine the station extension or trunk group/member number of the port. Use the **status bri-port PCSSpp** command to determine the service state of the port. If the service state indicates that the port is in use, then the port is unavailable for certain tests. Wait until the port is idle before retesting. 1. If the port status is idle, then retry the command at 1-minute intervals a maximum of 5 times.
1004	ABORT	The port has been seized by a user for a valid call. Use the **status bri-port** command to determine when the port is available for testing. 1. Retry the command at 1-minute intervals a maximum of 5 times.
1005	ABORT	This test is not valid for this type of translation. Ports administered as "ASAI" or "ADJK" cannot run this test, because the B channels associated with the port are not used by ASAI or Lucent Adjunct Links. This is a normal condition.
2012	ABORT	Internal system error
2100	ABORT	Could not allocate the necessary resources to run this test. 1. Retry the command at 1-minute intervals a maximum of 5 times.
1, 2	FAIL	The NPE of the tested port was found to be transmitting in error, causing noisy and unreliable connections. Error code 1 indicates that the NPE Crosstalk Test failed on Channel B1. Error code 2 indicates that the NPE Crosstalk Test failed on Channel B2. 1. Replace circuit pack.

Continued on next page

Table 3-301. TEST #617 NPE Crosstalk Test — *Continued*

Error Code	Test Result	Description/ Recommendation
	PASS	The port is correctly using its allocated time slots. 1. To be sure that this is not an intermittent problem, repeat this test a maximum of 10 times to ensure it continues to pass. 2. If complaints still exist, examine the connections and wiring.

BRI Port Local LAN Looparound Test (#618)

This test is destructive.

This test checks the connectivity of the BRI port across the LAN bus. Because this test is destructive, run this test only if the port is out-of-service.

Failures of this test indicate either on-board faults associated with theTBRI-PT hardware on the circuit pack or problems with the LAN Bus, which is used to form connectivity between the switch and the TBRI-PT.

If the port is in a state other than out-of-service, the BRI Port Local LAN Looparound Test will abort. If the port is out-of-service, then the port is put into a local looparound mode and the following test is executed.

A looparound test is performed across the bus for the D-Channel. The switch sends data over a packet connection, which is looped back by the BRI port (D-Channel) and received back by the switch. The test passes if the packet connection can be established and the transmitted data is received unaltered. The test aborts if the bus is alarmed in the Processor Port Network (or the port network in which that circuit pack resides) or if the Packet Interface is out-of-service. The test fails due to either on-board faults associated with the BRI port hardware on the circuit pack or problems with the bus.

Table 3-302. TEST #618 BRI Port Local LAN Loop Around

Error Code	Test Result	Description/ Recommendation
1015	ABORT	The port is not out-of-service. 1. Use the **status bri-port PCSSpp** command to determine the status of the port. 2. If it is in use, wait until it is idle, and then use the **busyout port PCSSpp** command to place it in the out-of-service state and repeat this test. **CAUTION:** *Since the busyout command is destructive, execution of this command prior to the port being idle causes all calls associated with the BRI port to be torn down.*
1141	ABORT	The PKT-INT is out-of-service. 1. Follow the repair procedures for the PKT-INT. 2. Run the **test port long PCSSpp** command and verify the repair by viewing the results of the BRI Port Local LAN Looparound Test (#618).
2012 2100	ABORT	Internal System Error. Could not allocate the necessary system resources to run this test. 1. Retry the command at 1-minute intervals a maximum of 5 times.
	FAIL	The Looparound Test failed. 1. If the test fails repeatedly, attempt to reset the circuit pack with the **busyout board PCSS** and the **reset board PCSS** commands if the other ports on the board are not in use. 2. If the test fails again, execute **test pkt P**. 3. If the tests in Step 2 pass, the problem is local to the BRI board. Replace the trunk circuit pack.
	PASS	The BRI Port Local LAN Looparound Test passed.

BRI Port Local TDM Looparound Test (#619)

This test is conditionally destructive.

This test verifies the connectivity of a BRI port across the TDM Bus. It aborts if calls associated with the port are in progress. Failure of this test indicates an on-board fault associated with the port hardware on the circuit pack.

This Looparound Test runs the following individual tests on the two B-channels (B1 and B2) associated with the port:

- A Looparound Test across the TDM Bus for B1.
- A Conference Circuit Test for B1.
- A Looparound Test across the TDM Bus for B2.
- A Conference Circuit Test for B2.

The tests are run in the above order. If one fails, the remaining tests in the sequence are not executed, and the maintenance software returns an error code.

Table 3-303. TEST #619 BRI Port Local TDM Loop Around

Error Code	Test Result	Description/ Recommendation
1000	ABORT	The system resources required to run this test are not available. The port may be busy with a valid call. Use the **display port PCSSpp** command to determine the trunk group/member number of the port. Use the **status bri-port PCSSpp** command to determine the service state of the port. If the service state indicates that the port is in use, then the port is unavailable for certain tests. Wait until the port is idle before retesting. 1. If the port is idle, then retry the command at 1-minute intervals a maximum of 5 times.
1002	ABORT	The system could not allocate time slots for the test. The system may be under heavy traffic conditions or it may have time slots out-of-service due to TDM-BUS errors. Refer to TDM-BUS to diagnose any active TDM Bus errors. 1. If the system has no TDM-BUS errors and is not handling heavy traffic, repeat test at 1-minute intervals a maximum of 5 times.
1003	ABORT	The system could not allocate a tone receiver for the test. 1. Look for TTR-LEV errors in the Error Log and if present, refer to TTR-LEV. 2. Look for TONE-PT errors in the Error Log and if present, refer to TONE-PT. 3. If neither condition exists, retry the test at 1-minute intervals a maximum of 5 times.
1004	ABORT	The port has been seized by a user for a valid call. Use the **status trunk** command for the trunks associated with this port and determine when the port is available for testing. 1. Retry the command at 1-minute intervals a maximum of 5 times.
1005	ABORT	This test is not valid for this type of translation. Ports administered as ASAI or ADJK cannot run this test because the B channels associated with the port are not used by ASAI or Lucent Adjunct Links. This is a normal condition.

Continued on next page

Table 3-303. TEST #619 BRI Port Local TDM Loop Around — *Continued*

Error Code	Test Result	Description/ Recommendation
2000	ABORT	Response to the test was not received from the BRI-LINE circuit pack within the allowable time period. 1. If this result occurs repeatedly, attempt to reset the circuit pack with the **busyout board PCSS** and the **reset board PCSS** commands if the other ports on the board are not in use. 2. If this result occurs again, replace the circuit pack.
2012	ABORT	Internal system error
2100	ABORT	Could not allocate the necessary resources to run this test. 1. Retry the command at 1-minute intervals a maximum of 5 times.
2103	ABORT	The system could not make the conference connection for the test. 1. Retry the command at 1-minute intervals a maximum of 5 times.
1, 2	FAIL	The TDM Looparound failed on one of the channels. ■ Error Code 1 — TDM Loop Around Test failed on B1. ■ Error Code 2 — TDM Loop Around Test failed on B2.
7, 8	FAIL	The Conference Circuit Test failed on a B-channel. ■ Error Code 7 — test failed on B1 ■ Error Code 8 — test failed on B2. 1. If the test fails repeatedly, attempt to reset the circuit pack with the **busyout board PCSS** and the **reset board PCSS** commands if the other ports on the board are not in use. 2. If the test fails again, replace the circuit pack.
	PASS	The BRI Port Local TDM Loop Around Test passed.

CRC Error Counter Test (#623)

This test is non-destructive. This test reads the BRI port's CRC error counters that are maintained on the BRI circuit pack. The Cyclic Redundancy Check (CRC) is a means of error detection used to determine the integrity of data frame contents. The CRC error counter is incremented by the circuit pack when it detects a CRC error. The test passes if the value of the counter is 0 (that is, the error is cleared). If the counter is non-zero, the test fails, and the value of the counter is displayed in the `Error Code` field.

Table 3-304. TEST #623 CRC Error Counter Test

Error Code	Test Result	Description/ Recommendation
ANY	FAIL	This error occurs when a frame with a bad CRC is received over the D-Channel by the BRI board. This error is reported on a per-port basis when the counter goes over the threshold. This error is most likely due to a problem with the wiring or interference on the wiring caused by a noise source or no termination. It usually does not indicate a problem with the circuit pack.
	PASS	The CRC error counter was read correctly and has a value of 0.

Receive FIFO Overflow Error Counter Test (#625)

This test is nondestructive. This test reads and clears the BRI port's Receive FIFO Overflow error counter maintained on the TBRI-BD circuit pack. This counter is incremented by the circuit pack when it detects an overflow of its receive buffers. The test passes if the value of the counter is 0 (that is, the error is cleared). If the counter is non-zero, the test fails, and the value of the counter is displayed in the Error Code field.

This error can occur if signaling frames are being received from the Packet Bus at a rate sufficient to overflow the receive buffers on the circuit pack for a port OR if a hardware fault is causing the receive buffers not to be emptied properly by the circuit pack. This test is useful for verifying the repair of the problem.

Table 3-305. TEST #625 Receive FIFO Overflow Error Counter Test

Error Code	Test Result	Description/ Recommendation
2000	ABORT	Response to the test was not received from the circuit pack within the allowable time period. 1. If the test aborts repeatedly a maximum of 5 times, reset the circuit pack with the **busyout board PCSS** and **reset board PCSS** commands. 2. If the test aborts again, replace the circuit pack.

Continued on next page

Table 3-305. TEST #625 Receive FIFO Overflow Error Counter Test — *Continued*

Error Code	Test Result	Description/ Recommendation
2012	ABORT	Internal system error
2100	ABORT	Could not allocate the necessary system resources to run this test. 1. Retry the command at 1-minute intervals a maximum of 5 times.
value	FAIL	The TBRI-BD circuit pack is still detecting errors of this type. The Error Code field contains the value of this counter. 1. Retry the command at 1-minute intervals a maximum of 5 times. 2. If the test continues to fail, run the Long Test Sequence and pay particular attention to the Looparound Tests (#618 and #619). See the repair procedures for the executed test if it fails. Otherwise, go to the next step. 3. Replace the circuit pack.
	PASS	The Receive FIFO Overflow error counter was read correctly and has a value of 0.

Level 1 Status Inquiry Test (#1242)

This test is nondestructive. This test determines the state of the transmission facility of a BRI port at the Level 1 (L1) physical layer: Activated, Pending Activation, or Deactivated.

The Activated state is the correct state for an ISDN-BRI port. In this state the L1 interface can send and receive synchronized signals. This test passes if the state of L1 is Activated. This test also passes if software has taken this port out of service. See the description of the L1 “Deactivated State” below for more details.

The Pending Activation state indicates a problem with the channels, the wiring, or the TBRI-BD circuit pack. When in this state, the Level 1 interface is either not receiving any L1 framing from the channel, or it is communicating with the channel or adjunct but cannot transition to the Activated state.

The Deactivated state indicates a problem with the TBRI-BD circuit pack. When in this state, the Level 1 interface is not active, and an idle signal is transmitted to the channels or that Layer 1 was deactivated by the switch. When an TBRI-PT port is placed in the out-of-service state, Level 1 is also put into the Deactivated state. This could be due either to the system detecting a fault with the port or to a **busyout port PCSSpp** request.

Table 3-306. TEST #1242 Level 1 Status Inquiry

Error Code	Test Result	Description/ Recommendation
1187	ABORT	The board or port may have been busied out. 1. Look in the Error Log for Error Type 18 (port busied out) for this port and TBRI-BD (board busied out). If this error type is present for TBRI-PT only, then release the port with the **release port pp** command and run the test again. If the error is present for both TBRI-BD and TBRI-PORT, then release the board with the **release board PCSS** command and run the test again. **NOTE:** When you release a port, you release all ports associated with it. If certain ports still need to be busied out, use the **release port PCSSpp** command to busy them out. 2. Make sure the terminal is connected. 3. Retry the command at 1-minute intervals a maximum of 5 times.
2000	ABORT	Response to the test was not received from the circuit pack within the allowable time period. 1. If the test aborts repeatedly a maximum of 5 times, reset the circuit pack with the **busyout board PCSS** and **reset board PCSS** commands. 2. If the test aborts again, replace the circuit pack.
2012	ABORT	Internal system error
2100	ABORT	Could not allocate the necessary system resources to run this test. 1. Retry the command at 1-minute intervals a maximum of 5 times.
1	FAIL	Received a status of Level 1 Pending Activation. U interface down indicating a problem with a connection between the switch and the NT1, a 2- to 4-wire converter that is used to connect 4-wire terminals to a 2-wire TN2198 or TN2185 circuit pack. 1. Verify that the connections between the switch and the NT1 are good. Verify that the NT1 has power. 2. Execute the **test port PCSSpp** command and review the results of the Level 1 Status Inquiry Test to verify the repair. If this test still fails, proceed to Step 3. 3. Follow the manufacturers repair procedures for the NT1. Then execute the **test port PCSSpp** command and review the results of the Level 1 Status Inquiry Test to verify repair.

Continued on next page

Table 3-306. TEST #1242 Level 1 Status Inquiry — *Continued*

Error Code	Test Result	Description/ Recommendation
2	FAIL	Received a status of Level 1 Pending Activation. U interface up, S/T interface down, which indicates a problem with the NT1 or the wiring between the NT1 and the BRI endpoint (S/T interface). 1. Execute the **test port PCSSpp** command and review the results of the Level 1 Status Inquiry test to verify the repair. If this test still fails, proceed to Step 2. 2. Follow the manufacturer-recommended repair procedures for the NT1. Then execute the **test port PCSSpp** command and review the results of the Level 1 Status Inquiry test to verify repair.
3	FAIL	Received a status of Level 1 Deactivated; the port is out-of-service. 1. Issue the **status bri-port PCSSpp** command to verify that the service state of the port is out-of-service. If the service state of the port is not out-of-service, proceed to Step 2. 2. If the port has been placed out-of-service with the **busyout port PCSSpp** command, try releasing the port by executing the **release port PCSSpp** command. Then issue the **test port long PCSSpp** command and review the results of Level 1 Status Inquiry test. If this test still fails, proceed to Step 3. 3. After executing the **test port long PCSSpp** command, review the results of all the tests. Follow the repair procedures for any tests that fail. Verify repair of the problem by executing the **test port PCSSpp** command and by determining that the Level 1 Status test passes.
4	FAIL	Received a status of Level 1 Pending Activation, the NT1 has a loss of power indicating a problem with the NT1. 1. Follow the manufacturer-recommended repair procedures for the NT1. 2. Execute the **test port PCSSpp** command and review the results of the Level 1 Status Inquiry test to verify the repair.
	PASS	This test indicates that Level 1 is activated or that software has taken the port out of service.

Layer 3 Query Test (#1243)

This test is nondestructive. This test is used to check the application layer communications across the in-service ISDN D-Channel. The test passes if a status enquiry message was successfully sent, fails if the signaling link is down, and aborts if a query is already running or there is an internal error.

Table 3-307. TEST #1243 Layer 3 Query

Error Code	Test Result	Description/ Recommendation
1019	ABORT	Test is already running.
1113	ABORT	The signaling link is down. 1. Use the **test port PCSSpp long** command to clear any errors which prevent establishment of the signaling link. 2. Examine the results of Test #626, which is executed with the command. If this test aborts or fails, follow the repair procedure for the Signaling Link Status Test.
1141	ABORT	The PKT-INT is out-of-service. 1. Consult the repair procedure for PKT-INT.
1187	ABORT	The circuit pack or port may have been busied out by a technician. 1. Look in the Error Log for Error Type 18 (busied out) for TBRI-BD or TBRI-PT. a. If this error type is present for TBRI-PT, then release the port with the **release port PCSSpp** command, and run the test again. b. If the error is present for both TBRI-BD and TBRI-PT, then release the circuit pack with the **release board PPCSS** command and run the test again. **NOTE:** When you release the circuit pack, you release all ports associated with it. If certain ports still need to be busied out, use the **release port PCSSpp** command to busy them out. 2. Make sure the terminal is connected. 3. Retry the command at 1-minute intervals a maximum of 5 times.
2012	ABORT	Internal system error
2100	ABORT	Could not allocate the necessary system resources to run this test. 1. Retry the command at 1-minute intervals a maximum of 5 times.
	PASS	The switch has successfully sent a Status Enquiry message.

Slip Query Test (#1244)

This test is non-destructive. Slips occur when the transmitter and receiver are not running at precisely the same clock rate. The Slip Alarm Inquiry Test polls the total number of slips that have occurred on a link.

When the TN2185 circuit pack detects a slip condition, maintenance software initiates the Slip Alarm Inquiry Test to query the slip counters on the TN2185 circuit pack and total the slip counts in the maintenance software.

If the slip count is over the threshold, a Minor alarm is raised against the TN2185 circuit pack, leaving all ports of the TN2185 circuit pack in the in-service state. If the TN2185 circuit pack is used to supply the system synchronization source, the MINOR alarm will initiate a synchronization source switch. See TDM-BUS and SYNC for additional information.

Table 3-308. TEST #1244 Slip Alarm Inquiry Test

Error Code	Test Result	Description/ Recommendation
	ABORT	Internal System Error
2000	ABORT	Response to the test request was not received within the allowable time period. If Error Type 1538 is present in the Error Log, follow the maintenance strategy recommended for this error type.
2100	ABORT	Could not allocate the necessary system resources to run this test. 1. Retry the command at 1-minute intervals for a maximum of 5 times.
1 to 88	FAIL	The circuit pack and the remote endpoint are not synchronized to the same clock rate, which has generated the Slip alarm. The error code equals the number of slips detected by the TN2185 circuit pack since the last Slip Alarm Inquiry Test. 1. Retry the command at 1-minute intervals a maximum of 5 times. 2. If the circuit pack is a TN2185, enter the **list measurement ds1-log PCSS** command to read the error seconds measurement. 3. Verify that both endpoints of the DS1 link are administered using the same signaling mode, framing mode, and line coding. 4. Check the physical connections of DS1 Interface circuit packs and cable. 5. Replace the local DS1 Interface circuit pack and repeat the test. 6. Contact T1 Network Service to diagnose the remote DS1 endpoint.
	PASS	No Slip alarm is detected on the DS1 Interface circuit pack.
0	NO BOARD	The DS1 Interface circuit pack is not administered. 1. Administer the DS1 Interface circuit pack by issuing the **add ds1 PCSS** command. 2. Run the test again.

TBRI-TRK (TN2185 ISDN Trunk-Side BRI)

MO Name (in Alarm Log)	Alarm Level	Initial Command to Run[1]	Full Name of MO
TBRI-TRK[2]	MAJOR[3]	test trunk PCSSpp l	MO_TBRI_TRK
TBRI-TRK	MINOR	test trunk PCSSpp l	MO_TBRI_TRK
TBRI-TRK	WARNING	test trunk PCSSpp sh	MO_TBRI_TRK

1. Where P is the port network number (1); C is the carrier designation (for example, A, B, or C); and SS is the address of the slot in the carrier where the circuit pack is located (for example, 01, 02, and so forth).
2. For additional repair information, also see TBRI-BD and TBRI-PT Maintenance Object documentation.
3. A MAJOR alarm on a trunk indicates that alarms on these trunks are not downgraded by the **set options** command and that at least 75 percent of the trunks in this trunk group are alarmed.

The TN2185 circuit pack contains eight, 4-wire ports that interface to the network at the ISDN S/T reference point over two 64 Kb/s channels (B1 and B2) and over a 16Kb/s signaling (D) channel. The B1 and B2 channels can be simultaneously circuit switched, or individually packet switched. Only one channel per trunk can be packet switched due to Packet Processing Element (PPE) limitations. The D channel is either circuit switched or packet switched. Packet switching uses the PPE to combine all D channels into a single physical channel, which is then routed via the concentration highway to the Network Control Element (NCE) and then to the TDM bus. The circuit-switched connections have a Mu-law or A-law option for voice and operate as 64Kb/s clear data channels. The packet-switched channels support the LAPD protocol and conform with the CCITT Q.920 Recommendations for D-channel signaling.

LEDs

The three LEDs on the circuit pack's faceplate indicate board status. When illuminated, the red LED indicates a board failure or a major or minor on-board alarm, the green LED indicates that testing is in progress, and the amber LED indicates that the board is in use.

Hardware Error Log Entries and Test to Clear Values

Table 3-309. TBRI-TRK Error Log Entries

Error Type	Aux Data	Associated Test	Alarm Level	On/Off Board	Test to Clear Value
0[1]	0	Any	Any	Any	test Port UCSSPP sh r 1
513 (a)		Service State Audit (Test #256)	WARNING	OFF	
1793 (b)	8, 9		WARNING	OFF	
3073 (c)		Service State Audit (Test #256)			
3585 (d)					
3841 (e)			WARNING	OFF	

1. Run the Short Test Sequence first. If all tests pass, run the Long Test Sequence. Refer to the appropriate test description and follow the recommended procedures.

Notes:

a. The far-end has reported that this channel is not administered. The trunks are placed in the out-of-service state.

b. The Signaling link is down. See the following Aux Data explanation:

— Aux data 8 indicates the Signaling Link is down.

— Aux data 9 indicates the Port is out of service.

c. The Service State Audit failed. The test will be run every 15 minutes until it passes.

d. Unexpected Restart message; this error causes no action and is logged only.

e. B-Channel Rejection Event; this action causes the Service State Audit, the Call State Audit, and the Test Call Audit to be executed.

System Technician-Demanded Tests: Descriptions and Error Codes

Always investigate tests in the order presented in the table below when inspecting errors in the system. By clearing error codes associated with the *Services State Test*, for example, you may also clear errors generated from other tests in the testing sequence.

Order of Investigation	Short Test Sequence	Long Test Sequence	D/ND[1]
Signaling Link State Check Test (#1251)	X	X	ND
Service State Audit Test (#256)	X	X	ND
Call State Audit Test (#257)	X	X	ND
ISDN Test Call Test (#258)		X	ND

1. Destructive; ND = Nondestructive

Signaling Link State (#1251)

This test is nondestructive. This test checks the current state of the signaling link. The test looks at the board-level translations, checks that the board is physically inserted, gets the state of the D-Channel and service state of the port.

The test passes if the signaling link (D-Channel) is connected and operating normally. The test fails if the board is not installed, the signaling link is disconnected, or if the port is out of service. The test aborts otherwise.

Table 3-310. TEST #1251 Signaling Link State Test

Error Code	Test Result	Description/ Recommendation
	ABORT	Internal system error
1018	ABORT	The test is disabled. 1. Enable the test by entering **enable test #1251**.
1114	ABORT	The signaling link is in a transitional state. 1. Retry the command at 1-minute intervals a maximum of 5 times.
8	FAIL	The signaling link is down. 1. Consult the procedures for the TBRI-PT maintenance object.

Continued on next page

Table 3-310. TEST #1251 Signaling Link State Test — *Continued*

Error Code	Test Result	Description/ Recommendation
9	FAIL	The port is out of service. 1. Return the port too an in service state.
	PASS	The signaling link is connected and operating normally.

Service State Audit (#256)

This test is nondestructive. This test performs a service state audit on an ISDN B-Channel. The test passes if Call Processing informs Maintenance that the Restart message was transmitted successfully, or if the B-Channel was busy and could not send the message.

The test fails if the board is not inserted or translated properly, or if a reply is not received within a certain amount of time.

The test aborts if the signaling link is disconnected, if a message is already outstanding, or if the necessary resources could not be allocated. Maintenance will take no action if the test aborts.

To investigate the service state of the TN2185 ISDN Trunk-Side BRI Channel, issue the **status trunk trunk-group/trunk-member** command.

Table 3-311. TEST #256 Service State Audit Test

Error Code	Test Result	Description/ Recommendation
1000	ABORT	System resources required to run this test are not available. The port may be on a valid call. Use **status trunk** to determine when the trunk is available for testing. 1. Check the results of Test #1251 (Signaling Link State Check).
1018	ABORT	The test is disabled. 1. Enable maintenance by entering **y** in the `Maintenance Tests?` field on page 2 of the **change trunk-group** form.
1113	ABORT	The signaling link has failed, so the system cannot send any messages on behalf of this trunk. 1. Check the results of Test #1251 (Signaling Link State Test).

Continued on next page

Table 3-311. TEST #256 Service State Audit Test — *Continued*

Error Code	Test Result	Description/ Recommendation
1114	ABORT	The signaling link is in a transitional state. 1. Retry the command at 1-minute intervals a maximum of 5 times.
1116	ABORT	The trunk is not in a service state which is appropriate for running the test. This test is only performed in the OOS/FE state.
1117	ABORT	A service state audit message is outstanding. 1. Wait two minutes and then try again.
2100	ABORT	Could not allocate the necessary system resources to run this test. 1. Retry the command at 1-minute intervals a maximum of 5 times.
	FAIL	Internal System Error. 1. Retry the command at 1-minute intervals a maximum of 5 times.
	PASS	Wait 4 minutes and then check the Error Log for any new errors of type 3073. If there are none, then both sides of the ISDN connection agree on the service state; the negotiation succeeded. If there is a new 3073 error, then the negotiation failed (the far-end switch twice failed to respond within 2 minutes). The switch automatically retries every 15 minutes. If the trunk was initially in-service, it is now placed in the maintenance/far-end state. Incoming calls will be accepted, but no outgoing calls can be originated. If an incoming call is presented, another Service State Audit is immediately performed in an attempt to put the TN2185 ISDN Trunk-Side BRI Channel in the proper state.

Call State Audit Test (#257)

This test is nondestructive. This test performs a call state audit on an ISDN B-Channel, and upon successful completion, guarantees that both sides of the interface are in a consistent call state for connections using the B-Channel. The test can be helpful when trying to clear a hung call. If the internal call state data to the near-end switch is different from that of the far-end switch, the call will be torn down.

The test passes if the audit is successful.

The test fails if the board is not inserted, there is an internal system error, or if a reply was not received within a certain amount of time.

The test aborts if the signaling link is disconnected, the request is already active, or if the B-Channel is in an Out-Of-Service state.

Table 3-312. TEST #257 Call State Audit Test

Error Code	Test Result	Description/ Recommendation
1018	ABORT	The test is disabled. 1. Enable the test by entering **y** in the `Maintenance Tests?` field on page 2 of the **change trunk-group** form.
1019	ABORT	An audit is already in progress. 1. Wait two minutes and try again.
1113	ABORT	The signaling link has failed, so the system cannot send any messages on behalf of this trunk. 1. Check the results of Test #1251 (Signaling Link State Check).
1114	ABORT	The signaling link is in a transitional state. 1. Retry the command at 1-minute intervals a maximum of 5 times.
1116	ABORT	The trunk is in an out-of-service ISDN service state. 1. A call cannot be present if the trunk is in an ISDN out-of-service state, so a call state audit would be inappropriate. No action necessary. (Use the **status trunk** command.)
2100	ABORT	Could not allocate the necessary system resources to run this test. 1. Retry the command at 1-minute intervals a maximum of 5 times.
	FAIL	Internal system error 1. Retry the command at 1-minute intervals a maximum of 5 times.
	PASS	The audit passed successfully.

ISDN Test Call Test (#258)

This test performs a far-end loop around to a far-end switch over an ISDN trunk. The trunk's service state must be in-service, maint-NE, or out-of-service/NE, and no call can be active on the trunk.

A test call connection is established to a far-end switch over the ISDN trunk to be tested. The digital port on a TN711D Maintenance/Test circuit pack generates a test-pattern bit stream which is sent to the far-end switch and echoed back. The received pattern is then compared to the sent pattern and checked for errors that indicate a loss of integrity on the communications path.

If a test call is running when scheduled maintenance starts, the green LED is turned off. To determine if a test call is still running, use the **list isdn-testcall** and **status isdn-testcall** commands. A lit yellow LED on the Maintenance/Test circuit pack also indicates that a test call is running.

There are two methods available to place an outgoing ISDN Trunk-side BRI trunk test call:

1. The test call connection is established over the TDM Bus of the transmit and receive sides of the ISDN Trunk-side BRI trunk to a data channel.
2. The test call connection is established over the TDM Bus of the transmit and receive sides of the ISDN Trunk-side BRI trunk to a digital trunk testing port on the Processor circuit pack. The Processor Digital Port generates a pseudo bit stream.

A test is run periodically to check if the call is hung. If so, it gracefully tears down the call to release the resources.

Synchronous Commands

You can demand a synchronous outgoing test call by using the following maintenance commands:

- **test trunk trunk-group-no/member-no long [repeat number]**
- **test board board-location long [repeat number]**
- **test port port-location long [repeat number]**

Whenever a circuit translates to an ISDN Trunk-side BRI trunk during a Long Test Sequence, an outgoing test call is invoked, and the duration of the test call is 8.6 seconds. The outgoing ISDN Trunk-side BRI trunk test call is established over a high speed data channel on the Processor circuit pack (DATA-BD). A bit error rate greater than zero is reported as a failure to the Manager I terminal (MGRI). A failure indicates the need to run further diagnostics.

Asynchronous Commands

NOTE:
Only one trunk can be tested in a given port network, until the test call is canceled or completes.

Table 3-313. TEST #258 ISDN TEST Call

Error Code	Test Result	Description/ Recommendation
4	ABORT	There is a problem with the Processor Interface Link. 1. Refer to the PKT-INT (Packet Interface) Maintenance documentation.

Continued on next page

Table 3-313. TEST #258 ISDN TEST Call — *Continued*

Error Code	Test Result	Description/ Recommendation
1004	ABORT	B channel in use. 1. Determine if a call is active on this ISDN Trunk-side BRI trunk with the **status trunk** command. 2. When the service state indicates in-service/idle, retry the test.
1005	ABORT	Bad Configuration (that is, no Maintenance/Test circuit pack) Issue the **test trunk *trunk group/trunk member*** command and make sure there is a DATA-CHL administered.
1018	ABORT	Test call is disabled. 1. Enable Maintenance on the Trunk Group form.
1024	ABORT	(M/T-DIG) Maintenance/Test Digital Port in use. 1. Wait until yellow and green LEDs are turned off on the M/T-BD (Maintenance/Test circuit pack). 2. Retry the test. If problem persists, refer to M/T-DIG (Maintenance/Test Digital Port) Maintenance documentation.
1113	ABORT	The signaling link has failed. Therefore, the system cannot send any messages on behalf of this trunk. 1. Check the results of Test #1251 (Signaling Link State Check Test).
1114	ABORT	The signaling link is in a transitional state. 1. Retry the command at 1-minute intervals a maximum of 5 times.
1116	ABORT	The switch could not appropriately change the ISDN service state. 1. Determine if a call is active on this ISDN Trunk-side BRI trunk (use the **status trunk)** 2. If not, check the Error and Alarm Logs for problems with this TBRI-TRK MO.
1117	ABORT	ISDN B-channel maintenance message is already outstanding. 1. Wait two minutes. Then try again.
1118	ABORT	Far-end of ISDN trunk is not administered. 1. Check the administration of the far-end ISDN trunk. 2. Issue the **status trunk** command. 3. Try the test again.
1119	ABORT	The test call was aborted due to a normal call attempt on this trunk. The test call is performed only if the trunk is idle. 1. Either wait for the normal call to terminate normally, or force it to be dropped by using the **busyout trunk** command.

Continued on next page

Table 3-313. TEST #258 ISDN TEST Call — *Continued*

Error Code	Test Result	Description/ Recommendation
1120	ABORT	The ISDN Trunk-side BRI trunk is in the ISDN out-of-service/far-end state. 1. Try to change the service state via Test #256 (Service State Audit Test). Then retry this test. **However, the trunk may be in the out-of-service/far-end state due to problems at the far-end switch. If that is the case, no remedial action can be taken at this end.**
1122	ABORT	There is no test line number for the far-end switch. 1. Check the Trunk Group Administration form.
1123	ABORT	There is no Feature Access Code administration for this Facility Test. 1. Check the Dial Plan and Feature Administration forms.
2012 None 2000	ABORT	Internal System Error. 1. Retry the command at 1-minute intervals a maximum of 5 times.
2035	ABORT	The call has timed out, perhaps because of a lack of system resources. 1. Wait 1 minute and try again.
2036 2037	ABORT	Internal System Error. 1. Follow the recommendation for ABORT code 2012.
2038 2039	ABORT	A problem occurred while trying to read the test data. 1. Wait one minute and then try again. 2. If the test aborts again in the same manner, there is a serious internal problem.
2040	ABORT	Internal System Error. 1. Follow the recommendations for ABORT code 2012.
2041	ABORT	The call has timed out, perhaps because of a lack of system resources. 1. Follow the recommendations for ABORT code 2035.
2066	ABORT	Could not establish test call. 1. Retry the command at 1-minute intervals a maximum of 5 times.
2067	ABORT	The call has timed out, perhaps because of a lack of system resources. 1. Follow the recommendations for ABORT code 2035.
2074	ABORT	Bit and Block Error query failed. 1. Retry the command at 1-minute intervals a maximum of 5 times. 2. If the test continues to abort, there may be a serious internal problem with M/T-DIG (Maintenance/Test Digital Port). If this is the case, refer to the M/T-DIG (Maintenance/Test Digital Port) Maintenance documentation.

Continued on next page

Table 3-313. TEST #258 ISDN TEST Call — *Continued*

Error Code	Test Result	Description/ Recommendation
2075	ABORT	Internal System Error. 1. Follow the recommendations for ABORT code 2012.
2100	ABORT	Could not allocate the necessary system resources to run this test. 1. Retry the command at 1-minute intervals a maximum of 5 times.
2104	ABORT	Call dropped or could not be originated. 1. Make sure service is provisioned by the network. 2. Check the administration of the far-end test line extension on the trunk group administration form. 3. Check the administration of the test call BCC (Bearer Capability Class) on the trunk group administration form. 4. Try the test again.
2201 2202 2203 2204 2205	ABORT	Internal System Error. 1. Follow the recommendations for ABORT code 2012.
2206	ABORT	Could not allocate the necessary system resources to run this test. 1. Follow the recommendations for ABORT code 2100.
2208	ABORT	Internal System Error. 1. Follow the recommendations for ABORT code 2012.
2209 2210	ABORT	Could not allocate the necessary system resources to run this test. 1. Follow the recommendations for ABORT code 2100.
2211	ABORT	Internal System Error. 1. Follow the recommendations for ABORT code 2012.
2212	ABORT	Call terminated by unexpected disconnect. 1. Wait one minute and then try again.
2213	ABORT	The call has timed-out, perhaps because of a lack of system resources. 1. Follow the recommendations for ABORT code 2035.
2214	ABORT	Call terminated by unexpected disconnect. 1. Wait one minute and then try again.

Continued on next page

Table 3-313. TEST #258 ISDN TEST Call — *Continued*

Error Code	Test Result	Description/ Recommendation
2215 2216 2217 2218 2219	ABORT	Internal System Error. 1. Follow recommendations for ABORT code 2012.
2220	ABORT	Call terminated prematurely. 1. Wait one minute and try again.
2221 2222 2223 2224 2225 2226	ABORT	Internal System Error. 1. Follow recommendations for ABORT code 2012.
2227	ABORT	Could not allocate the necessary system resources to run this test. 1. Follow the recommendations for ABORT code 2100.
2042	FAIL	**This is the main purpose of the test.** The comparison of the data sent with the data received indicates a loss of integrity on the communications path. 1. The trunk should be taken out-of-service and the quality of the ISDN Trunk-side BRI line should be investigated. The investigation should include an in-depth analysis of the facility including the transmission facility and any external equipment such as DACs, CSUs, etc.
	PASS	The call worked. A test pattern was sent and received properly; the communications path is OK if the synchronous test call command was issued. An in-depth analysis of the ISDN Trunk-side BRI trunk facility including the transmission facility and any external equipment such as DACs, CSUs, and others should take place if the bit and block error rates are not acceptable.

TDMODULE (Trunk Data Module)

MO Name (in Alarm Log)	Alarm Level	Initial Command to Run	Full Name of MO
TDMODULE[1]	MINOR	test port PCSSpp l	Trunk Data Module
TDMODULE (a)	WARNING	test port PCSSpp l	Trunk Data Module

1. Where P is the port network number (1); C is the carrier designation (for example, A, B, or C); SS is the address of the slot in the carrier where the circuit pack is located (for example, 01, 02, ...,etc.); and pp is the 2-digit port number (for example, 01).

The TDMODULE (Trunk Data Module) Maintenance documentation is covered in the PDMODULE (Processor Data Module) Maintenance documentation.

TDM-BUS (TDM Bus)

MO Name (in Alarm Log)	Alarm Level	Initial Command to Run	Full Name of MO
TDM-BUS	MAJOR	test tdm P	TDM Bus
TDM-BUS	MINOR	test tdm P	TDM Bus
TDM-BUS	WARNING	test tdm P	TDM Bus

The TDM Bus consists of a duplicated TDM Bus on each port network: TDM Bus A and TDM Bus B. Each TDM Bus consists of 256 time slots. The first five time slots on each bus are called the Control Channel. The Control Channel is active on only one bus at a time in each Port Network. The next 17 time slots are reserved for dedicated tones (that is, dial tone). These time slots are called the dedicated tone time slots and only one bus at a time carries the dedicated tones. The rest of the time slots on each bus are for general system use (that is, phone call).

On system initialization, the Control Channel is on TDM Bus A and the dedicated tones on TDM Bus B in each Port Network.

Terminology:

- Control Channel Bus - The TDM Bus control channel is on.
- Non-Control Channel Bus - The TDM Bus control channel is NOT on.
- Tone Bus - The TDM Bus dedicated tone time slots are on.
- Non-Tone Bus - The TDM Bus dedicated tone time slots are NOT on.

TDM Bus Fault Detection and Isolation Procedure

TDM Bus faults are most likely caused by a defective circuit pack connected to the backplane or bent pins on the backplane. It is possible that a circuit pack can cause a TDM Bus fault but still exhibit trouble-free operation. For example, the insertion of an MBUS (Memory Bus) only circuit pack can bend the TDM Bus pins on the backplane and short two leads together. Since the TDM Bus is a shared resource, automatic identification of the cause of a TDM Bus fault is difficult. If a TDM Bus problem is suspected, the system technician should run the **test tdm P** system technician command. If any of the resulting tests fail, then the system technician must manually perform a TDM Bus isolation procedure to identify the cause of the problem.

WARNING:
Since the TDM Bus fault isolation procedure involves removing circuit packs and possibly disconnecting entire carriers, the procedure is extremely destructive to the port network that contains the TDM Bus being

tested. If possible, this procedure should be used after hours or during hours with minimum system use.

As circuit packs are removed or entire carriers are disconnected, any active calls terminating on those circuit packs or carriers are dropped. If the system technician has any hints about a particular circuit pack that may be causing the TDM Bus problem (for example, a new circuit pack was inserted into the Port Network just before the TDM Bus problem appeared), then those hints should be investigated before performing this procedure.

For this procedure, make sure at least one Tone Detector circuit pack is in the same Port Network in which the TDM Bus fault is being isolated. The Tone Detector circuit pack is needed by maintenance to test the TDM Bus.

Procedure 1

This procedure is an attempt to isolate the TDM Bus fault to circuit packs that are essential to the system operation. For each of the following circuit packs, perform Procedure 1.

Circuit Pack	Error Log Names
Tone-Clock	TONE-BD, TONE-PT, and TDM-CLK
Network Control	SW-CTL
Tone Detector	DETR-BD, GPTD-PT, and DTMR-PT

1. Display the Hardware Error and Alarm Logs for the circuit pack via the **display errors** and **display alarms** commands.
2. If there are errors for the circuit pack, refer to its Maintenance documentation and try to resolve the errors.
3. Whether or not all the errors can be cleared, test the TDM Bus again via the **test tdm P** command.
4. If some TDM Bus tests fail, continue with the next circuit pack.
5. If there are no more circuit packs in the list, go to Procedure 2.
6. If all the TDM Bus tests pass, the problem has been fixed.

Procedure 2

This procedure removes and re-inserts port circuit packs; one or several at a time.

If all of the TDM Bus tests pass when the circuit pack is removed, but some of the tests fail when the circuit pack is inserted, the circuit pack is the cause of the problem and should be replaced. If some of the tests fail regardless of whether the circuit pack is inserted or removed, the circuit pack is not the cause of the

problem (see Note). Repeat this procedure for each purple slot circuit pack in the Port Network.

NOTE:
Of course, in a multiple failure situation, the circuit pack may be one cause of the TDM Bus problem and there may be other failures that are causing TDM Bus faults. Also, the circuit pack itself may not be the cause of the problem, but the backplane pins may have been bent when the circuit pack was inserted.

1. Remove port circuit packs which have failed the NPE Crosstalk Test (#6) first. To find which circuit packs failed this test, display the Hardware Error Log via the **display errors** command. Refer to the Maintenance documentation of each port circuit pack that has port errors to check if any error indicates the failure of the NPE Crosstalk Test.
2. If no circuit pack failed the NPE Crosstalk Test (#6), remove one or several purple slot circuit packs.
3. Run the **test tdm P** command.
4. If any of the TDM Bus tests fail:
   - Check if the backplane pins in the removed circuit pack's slot appear to be bent.
   - If the backplane pins are bent, straighten or replace the pins, re-insert the circuit pack, and do this procedure again for the same circuit pack.
   - If the backplane pins are not bent, re-insert the circuit pack and do this procedure for the next set of circuit packs.
5. If none of the TDM Bus tests fail:
   - Re-insert the circuit pack.
   - Run the **test tdm** system technician command.
   - If any of the TDM Bus tests fail, the re-inserted circuit pack is faulty. Replace the circuit pack and do this procedure again for the new circuit pack.
   - If none of the TDM Bus tests fail, then the problem has been fixed.

Procedure 3

Procedure 3attempts to isolate the failure to a particular set of carriers, and then checks only the circuit packs in those carriers. This procedure involves terminating the TDM Bus so that certain carriers are disconnected from the TDM Bus. This is done by moving the TDM Bus terminators (AHF1) on the carrier backplane. To terminate a TDM Bus at the end of a particular carrier, the TDM Bus cable that connects the carrier to the next carrier should be unplugged and replaced with the TDM Bus terminator. The TDM Bus terminators can be taken from one carrier to the other. To get to the TDM Bus cables, remove the back

cover of the cabinet. When the length of the TDM Bus is modified via this procedure, the circuit packs that are essential to system operation and TDM Bus maintenance (for example, Network Control circuit pack, Tone-Clock circuit pack, Tone Detector circuit pack) must still be connected to the new *shortened* TDM Bus.

For the Processor Port Network (PPN)

1. Terminate the TDM Bus so that it extends within the control carrier.
2. Run the **test tdm** system technician command. If any of the TDM Bus tests fail, perform Procedure 2 and/or Procedure 3 for only the circuit packs in those carriers connected to the *shortened* TDM Bus. Procedure 2 is performed for port circuit packs (purple slots) and Procedure 3 for control carrier circuit packs.
3. If none of the TDM Bus tests fail, extend the TDM Bus to another carrier and repeat this procedure. When a carrier is added that causes some of the TDM Bus tests to fail, perform Procedure 2 and/or Procedure 3 for only the circuit packs in that carrier.

Restarting Nonfunctioning Port Circuit Packs

A defective TDM Bus Control Channel or system timing reference on one of the networks can result in port circuit packs (that is non-control carrier circuit packs) on this defective network entering the reset state. When this situation occurs, the circuit pack stops functioning and its red LED lights. The system does not detect the presence of a circuit pack when the circuit pack is in the reset state. Hence, executing the **list config board PCSS** command indicates that the circuit pack is not present.

If a circuit pack enters the reset state when the control channel is on TDM Bus PT (where network P contains the circuit pack), this circuit pack stops functioning until it receives a restart message when the control channel is on the same TDM Bus PT or when this circuit pack is powered up again.

To force the system to send a restart message to all circuit packs on a network, try one of the following methods depending on the circumstances:

NOTE:
A circuit pack functioning normally (that is, not in the reset state) ignores the restart message.

Procedure 1 (Nondestructive)

Execute the Idle Time Slot Test (#294) by issuing the command **test tdm P** when the control channel is on the same TDM Bus as it was when the circuit pack entered the reset state. If using this method is not feasible, try the other procedures in this section.

Procedure 2 (Nondestructive)

if you are at the site: Reseat the circuit pack. This action causes the circuit pack that was in the reset state to begin functioning on the *current* Control Channel bus.

Procedure 2 (Nondestructive)

Execute the Idle Time Slot Test (#294) by issuing the command **test tdm P** when the control channel is on the same TDM Bus as it was when the circuit pack entered the reset state. If using this method is not feasible, try the other procedures in the section.

Procedure 3 (Destructive)

Reset the port network that contains the circuit pack that is in the reset state. When a network is reset, two restart messages, one on the control channel of each TDM Bus, are sent to each circuit pack on the network. Executing the **reset system L** command (where L=2, 3, 4, or 5) resets all networks in the system.

WARNING:
*The **reset system** command disrupts all calls in the system.*

Procedure 4 (Destructive)

Execute the **recycle carrier PC** command where P is the Port Network Number of the network containing the circuit pack and C is the designation of the carrier containing the circuit pack.

WARNING:
This command removes power and returns power to the designated Medium cabinet port carrier. Thus, any other circuit packs on this carrier is also temporarily taken out-of-service.

Error Log Entries and Test to Clear Values

Table 3-314. TDM Bus Error Log Entries

Error Type	Aux Data	Associated Test	Alarm Level	On/Off Board	Test to Clear Value
0[1]	0	Any	Any	Any	test tdm
1	0	Control Channel Test (#296)	MINOR	ON	test tdm P r 3
18 (a)	0	busyout tdm PC	WARNING	ON	release tdm PC
35 (b)	0-1	TDM Bus Corruption	MINOR	ON	set tdm PC
257 (c)	0	none	MAJOR	ON	
513 (d)	Any	Idle Time Slot Test (#294)	MINOR	ON	test tdm P r 3
769 (e)	Any	Idle Time Slot Test (#294)	WARNING	ON	test tdm P r 3
769 (f)	Any	Idle Time Slot Test (#294)			(see Notes)
1025	Any				
3872 (g)	Any	none			
3873 (g)	Any	none			
3874 (g)	Any	none			
3877 (g)	Any	none			

1. Run the Short Test Sequence first. If all tests pass, run the Long Test Sequence. Refer to the appropriate test description and follow the recommended procedures.

NOTE:
For TDM-BUS, an ON-BOARD alarm refers to a problem with the TDM-BUS itself.

Notes:

a. The TDM Bus has been busied out by the technician. The error retires when the technician releases the TDM Bus.

b. This error indicates the TDM Bus is corrupted.

   An Aux Data value of 0 indicates the last reported TDM Bus corruption was on the Control channel bus.

   An Aux Data value of 1 indicates the last reported TDM Bus corruption was on the Non-Control channel bus.

   If this error is logged on both TDM Buses (A and B) within two or three minutes, the red LED of several circuit packs may or may not be lit and there could be Switch Control errors. Under these circumstances do the following:

- Display the Hardware Error Log via the **display errors** command and look for SW-CTL (Switch Control) errors.
- If there are any errors logged against the Switch Control, try to resolve them.
- Test the TDM Bus via the **test tdm P** command.
- If all the TDM Bus tests pass, the problem has been fixed.
- Test the TDM Bus via the **test tdm P** command.
- If all the TDM Bus tests pass, the problem has been fixed.

c. This error indicates the TDM Bus was switched to the other bus due to TDM Bus corruption. The aux data value is not meaningful and no action is required.

d. This error indicates that some time slots are corrupted in the specified TDM Bus. The Minor alarm is raised when there are more than 50 bad time slots in the bus. The aux data indicates the number of bad time slots found by the test.

e. This error indicates that some time slots are corrupted in the specified TDM Bus. The Warning alarm is raised when there are more than 10 bad time slots but less than or up to 50 bad ones in the bus. The aux data value indicates the number of bad time slots found by the test.

f. This error indicates the idle time slot test found less than 10 bad time slots in the TDM Bus. The aux data value indicates the number of bad time slots found by the test. There is no alarm associated with this error.

g. These errors indicate communication problems. Test the TDM Bus via the **test tdm P** command and follow the procedures according to the error codes reported from the test.

   The aux data value shows the Angel ID number for which a downlink message was lost.

System Technician-Demanded Tests: Descriptions and Error Codes

Always investigate tests in the order presented in the table below when inspecting errors in the system. By clearing error codes associated with the *Control Channel Test*, for example, you may also clear errors generated from other tests in the testing sequence.

Order of Investigation	Short Test Sequence	Long Test Sequence	D/ND[1]
Control Channel Test on the Control			
Channel Bus (#296)	X	X	ND
Digit Detection Test on the Non-Control			
Channel Bus (#297)	X	X	ND
Idle Time Slot Test on TDM Bus A (#294)	X	X	ND

1. D = Destructive; ND = Nondestructive

Idle Time Slot Test on TDM Bus A or B (#294)

The Idle Time Slot Test detects noisy time slots on the bus and takes them out-of-service. The Tone Detector circuit pack is told to listen to idle time slots and if it detects any noise on a time slot, it returns a failure. At the end of the test, any out-of-service time slots are retested to see if they are still noisy and restored to service if they are idle. After all the time slots have been tested, maintenance counts the number of bad time slots and reports the number to the technician in the error code field. No more than 220 time slots are taken out-of-service on one bus, and no more than 300 are taken out-of-service on both buses at one time.

Table 3-315. TEST #294 or #295 Idle Time Slot Test on TDM Bus A or TDM Bus B

Error Code	Test Result	Description/ Recommendation
none	ABORT	Could not allocate the necessary system resources to run this test. For example, maintenance could be running on the Tone Detector circuit pack and it is using the CPTRs.
1115	ABORT	Could not allocate the necessary system resources to run this test. 1. Retry the command at 1-minute intervals a maximum of 5 times.

Continued on next page

Table 3-315. TEST #294 or #295 Idle Time Slot Test on TDM Bus A or TDM Bus B — *Continued*

Error Code	Test Result	Description/ Recommendation
number	FAIL	The error code indicates the number of bad time slots that were detected. The cause of this failure is most likely due to a bad port circuit pack and not the TDM Bus itself. 1. Execute the command again. 2. If the error persists, check the Error and Alarm Logs for alarms on port circuit packs from the NPE Crosstalk Test. 3. Refer to the appropriate circuit pack's documentation to clear the circuit pack's problem. 4. Test the TDM Bus again. If the error continues, refer to the "TDM Bus Fault Detection and Isolation Procedure" described earlier.
	PASS	The success of this test indicates all the idle time slots that are supposed to be idle are indeed idle. There is no noise on any of the idle time slots.

Control Channel Test (#296)

This test tests the integrity of the Control Channel bus. It ensures that communication through the TDM Bus is operational.

Table 3-316. TEST #296 Control Channel Test

Error Code	Test Result	Description/ Recommendation
any code other than 1005	ABORT	Internal system error 1. Retry the command at 1-minute intervals a maximum of 5 times.
1005	ABORT	Since this test is valid only on the control channel bus, it aborts execution when run on the non-control channel bus. This is a valid response. Use the **status system** command to verify which bus is the control channel bus.

Continued on next page

Table 3-316. TEST #296 Control Channel Test — *Continued*

Error Code	Test Result	Description/ Recommendation
none	FAIL	Communication through the Control Channel is not working. The problem is not necessarily the TDM Bus itself. 1. Display the hardware error and alarm log for the Tone-Clock circuit pack. Refer to TONE-BD (Tone-Clock Circuit Pack) Maintenance documentation. 2. Resolve the errors for the Tone-Clock circuit pack. 3. Display the hardware error and alarm log for the Network Control circuit pack. Refer to DATA-BD (Network Control Circuit Pack) Maintenance documentation. 4. Execute the **test tdm P** command again. 5. If the test still fails, refer to the "TDM Bus Fault Detection and Isolation Procedure" described earlier.
	PASS	Communication through the TDM Bus is operational.

Digit Detection Test (#297)

This test is executed on the Non-Control Channel bus. The Tone-Clock circuit pack is told to put a tone on the Non-Control Channel bus and the Tone Detector circuit pack is told to listen to it. The test passes if the tone is successfully transmitted on the Non-Control Channel bus.

Table 3-317. TEST #297 Digit Detection Test

Error Code	Test Result	Description/ Recommendation
none, 1001 2100	ABORT	Could not allocate the necessary system resources to run this test.
1005	ABORT	Since this test is valid only on the non-control channel bus, it aborts execution when run on the control channel bus. This is a valid response. Use the **status system** command to verify which bus is the control channel bus.
2000	ABORT	Response to the test request was not received within the allowable time period. 1. Retry the command at 1-minute intervals a maximum of 5 times.

Continued on next page

Table 3-317. TEST #297 Digit Detection Test — *Continued*

Error Code	Test Result	Description/ Recommendation
none	FAIL	This failure indicates that communication on the Non-Control Channel is not reliable. 1. Execute the command again. 2. If the problem persists, test the Tone-Clock circuit pack and Tone Detector circuit pack to make sure they are healthy. Refer to TONE-BD (Tone-Clock Circuit Pack), TONE-PT (Tone Generator), GPTD-PT (General Purpose Tone Detector Port), and DTMR-PT (Dual Tone Multifrequency Port). 3. Execute the command again. 4. If the problems persists, refer to the "TDM Bus Fault Detection and Isolation Procedure" described earlier.
	PASS	The non-control channel bus is operational.

System Technician-Demanded Tests: Descriptions and Error Codes

Use the **list configuration control** command to find the Tone-Clock circuit pack code of the system, and then proceed to look for the Short and Long Test Sequences according to the Tone-Clock circuit pack code.

Always investigate tests in the order presented in the following tables when inspecting errors in the system. By clearing error codes associated with the *SAKI Reset Test*, for example, you may also clear errors generated from other tests in the testing sequence.

Table 3-318. System Technician-Demanded Tests: TDM-BUS with the TN2182 Tone-Clock Circuit Pack

Order of Investigation	Short Test Sequence	Long Test Sequence	D/ND[1]
SAKI Reset Test (#53) (a)		X	D
Clock Health Test (#46) (b)	X	X	ND
Control Channel Loop Around Test (#52) (a)	X	X	ND

Continued on next page

Table 3-318. System Technician-Demanded Tests: TDM-BUS with the TN2182 Tone-Clock Circuit Pack — *Continued*

Order of Investigation	Short Test Sequence	Long Test Sequence	D/ND[1]
Tone Generator Crosstalk Test (#90) (c)		X	ND
Tone Generator Transmission Test (#40) (c)	X	X	ND
Tone Generator Audit/Update Test (#41) (c)	X	X	ND
TDM Bus Clock Circuit Status Inquiry Test (#148)	X	X	ND
TDM Bus Clock PPM Inquiry Test (#150)	X	X	ND
TDM Bus Clock Parameter Update Test (#151)	X	X	ND
Standby Reference Health Check Test (#651) (d)		X	ND

1. D = Destructive, ND = Non-destructive

Notes:

a. Refer to XXX-BD (Common Port Circuit Pack) Maintenance documentation for descriptions of these tests.

b. Refer to TONE-BD (Tone-Clock Circuit Pack) documentation for a description of this test.

c. Refer to TONE-PT (Tone Generator) documentation for descriptions of these tests.

d. This test only runs on the Standby Tone-Clock circuit pack in a Port Network with more than one Tone-Clock circuit pack. The circuit pack must be a TN2182.

TDM Bus Clock PPM Inquiry Test (#150)

This test evaluates the quality of the synchronization source for the Tone-Clock circuit pack.

Table 3-319. TEST #150 TDM Bus Clock PPM Inquiry Test

Error Code	Test Result	Description/ Recommendation
	ABORT	The system could not allocate the necessary resources for the test.
1001	ABORT	The system could not allocate the necessary resources for the test. 1. Wait 1 minute, and retry the test.
2000	ABORT	Response to the test request was not received within the allowable time period.
2100	ABORT	System resources required to run this test are not available. 1. Retry the command at 1-minute intervals a maximum of 5 times.
255	ABORT	The test was not executed because the Tone-Clock circuit pack was using its local oscillator rather than synchronizing to an external source. 1. Verify that this Tone-Clock circuit pack is expected to be the synchronization source. If not, correct the synchronization information and re-execute the test.

Continued on next page

Table 3-319. TEST #150 TDM Bus Clock PPM Inquiry Test — *Continued*

Error Code	Test Result	Description/ Recommendation
ANY	FAIL	This error represents the number of PPM errors detected on the external synchronization source since the last PPM inquiry was sent to the Tone-Clock circuit pack. A failure of this test indicates that we are outside of Stratum 4 timing specifications on the external timing source. This error produces an invalid timing signal for any system that uses this source for a synchronization reference. The error code is a variable amount ranging from 1 to 254. 1. If there are errors against SYNC (Synchronization), refer to SYNC (Synchronization) Maintenance documentation to change the system synchronization reference, OR 2. If there are errors against STRAT-3 (Stratum 3 Clock), refer to the STRAT-3 (Stratum 3 Clock) Maintenance documentation to resolve the errors, OR 3. If there are errors against DS1-BD (DS1 Interface circuit pack), refer to the DS1-BD (DS1 Interface Circuit Pack) Maintenance documentation to resolve the errors, OR 4. If there are no other errors besides Error Type 1537 against TDM-CLK and if this error was logged against the Tone-Clock circuit pack that provided the current system synchronization reference (use the **status synchronization** command to determine this), replace the defective Tone-Clock circuit pack. **WARNING:** *Since service may be disrupted when the following procedures are carried out, try to perform the following steps when it is convenient for the customer.* 5. If the Tone-Clock circuit pack under test is in the Active mode but is not providing the current system synchronization reference, switch the synchronization reference to the Tone-Clock circuit pack under test using the **set synchronization PC** command. Rerun the test. If the test still fails, replace the defective Tone-Clock circuit pack. 6. If the Tone-Clock circuit pack under test is in the Standby mode place it in the Active mode via the command **set tone-clock PC**. Switch the synchronization reference to the Tone-Clock circuit pack under test using the **set synchronization PC** command. Rerun the test. If the test still fails, replace the defective Tone-Clock circuit pack.

Continued on next page

Table 3-319. TEST #150 TDM Bus Clock PPM Inquiry Test — *Continued*

Error Code	Test Result	Description/ Recommendation
	PASS	The Tone-Clock circuit pack does not detect timing any PPM errors. This indicates that the external synchronization timing source is valid or that the system synchronization reference is a Tone-Clock circuit pack. The **status synchronization** command should be used to verify that the desired synchronization reference is providing timing for the system.

TDM Bus Clock Parameter Update Test (#151)

This action updates the Tone-Clock internal circuit pack parameters. Tone-Clock circuit pack:

- Disable in-line duplication status messages.
- Set the PPM threshold at 85 PPM for TN2182.
- Enable PPM threshold switching
- Set the number of slips to trigger *loss of signal* - currently 30 per 5 millisecond period
- Enable the on-board synchronization switching algorithm (see above)
- Enable holdover operation (TN2182 only).

This is not a test and will always pass without identifying or reporting any Tone-Clock circuit pack errors.

Table 3-320. TEST #151 TDM Bus Clock Parameter Update Test

Error Code	Test Result	Description/ Recommendation
	ABORT	Internal system error
	FAIL	Internal system error 1. Retry the command at 1-minute intervals a maximum of 5 times.
	PASS	The Tone-Clock circuit pack parameters have been successfully updated.

Standby Reference Health Check Test (#651)

This test evaluates the quality of the external synchronization timing source for the Standby Tone-Clock circuit pack.

Table 3-321. TEST #651 Standby Reference Health Check Test

Error Code	Test Result	Description/ Recommendation
	ABORT	This test may already be running due to a tone-clock installation, scheduled maintenance, alarm activity, or a technician-demand test from another terminal. This abort can also occur due to an internal system error. 1. Try the command again at 1-minute intervals up to 5 times.
1184	ABORT	This test requires an external synchronization source to be administered (DS1 primary, DS1 primary and secondary, or Stratum 3 Clock). 1. Administer the external synchronization source and retry the test.
2500	ABORT	Internal system error 1. Try the command again at 1-minute intervals up to 5 times.
0	FAIL	**If the Tone-Clock circuit pack is in the PPN**, the external synchronization timing source for side A of the Stratum 3 clock, or for the Primary DS1 reference is either absent or invalid. **If the Tone-Clock circuit pack is in an EPN**, the synchronization reference from the active EI circuit pack is either absent or invalid.
1	FAIL	**If the Tone-Clock circuit pack is in the PPN**, both external synchronization timing sources are either absent or invalid. **If the Tone-Clock circuit pack is in an EPN**, the synchronization references from both EI circuit packs are either absent or invalid. 1. Correct the synchronization source problem. Refer to the Synchronization (SYNC) maintenance section of this manual. 2. If the error still exists, replace the Tone-Clock circuit pack reported in the error log.
	PASS	The external synchronization timing source is valid.

TDM-CLK (TDM Bus Clock)

MO Name (in Alarm Log)	Alarm Level	Initial Command To Run[1]	Full Name of MO
TDM-CLK	MAJOR	test tone-clock PC short	TDM Bus Clock
TDM-CLK	MINOR	test tone-clock PC short	TDM Bus Clock
TDM-CLK	WARNING	release tone-clock PC	TDM Bus Clock

1. P is the cabinet number (1). C is the carrier designation (A, B, or C).

NOTE:
Replacing the tone/clock circuit pack requires a special procedure described in the documentation for TONE-BD. That section also describes the LED displays for this board.

The Time Division Multiplex (TDM) Bus Clock resides on the Tone-Clock circuit pack, providing clocking signals both for the TDM Bus and the LAN Bus. The Tone-Clock circuit pack is a critical component in the system and is necessary to ensure the operation of all port circuit packs in the system. The TDM buses of the PPN are synchronized together. The system timing reference can be derived internally from the Tone-Clock circuit pack, or from an external (off-board) timing reference. Currently, the TDM Bus Clock supports synchronizing the TDM Bus with interface rates from Digital Signal 1 (DS1) facilities as primary or primary and secondary references.

Moreover, the Tone-Clock circuit pack aids in monitoring and selecting synchronization references. The Tone-Clock circuit pack, after detecting that the external source of timing is not valid, will automatically begin its escalation procedure, according to the facilities administered.

NOTE:
Switching back to a DS1 source is handled by synchronization maintenance, once any problems with it have been corrected and tested. However, once synchronization has been switched to the internal timing source of the master Tone-Clock circuit pack, *switching back to a Stratum 3 Clock must be initiated by a technician* after the external reference has been repaired.

Tone-Clock Role	Synchronization Facilities	Initial External Synchronization Source	Backup External Synchronization Source	Internal Source
MASTER	Stratum 3 Clock	Source "A"	Source "B"	Local oscillator
	DS1 Primary and Secondary	DS1 Primary	DS1 Secondary	
	DS1 Primary Only	DS1 Primary	None	
	No External Source	None	None	
SLAVE	PNC Duplication	Active EI	Standby EI	
	No PNC Duplication	Active EI	None	

See "SYNC (Synchronization)" for more details of the escalation plan. *There exists a strong interdependency among the DS1 Interface circuit pack Maintenance, Synchronization Maintenance, and TDM Bus Clock Maintenance MOs.*

Error Log Entries and Test to Clear Values

Table 3-322. TDM Bus Clock Error Log Entries

Error Type	Aux Data	Associated Test	Alarm Level	On/Off Board[1]	Test to Clear Value
0[2]	0	Any	Any	Any	test tone-clock PC sh r 1
1(a)	0	None	MINOR	OFF	
18(b)	0	busyout tone-clock PC	WARNING	OFF	release tone-clock PC
130(c)		None			
257(d)		None	WARNING	OFF	
513(e)	Any	Clock Circuit Status Inquiry (#148)	MINOR[3]	OFF	test tone-clock PC
769(f)	Any	Clock Circuit Status Inquiry (#148)	MAJOR‡	ON	test tone-clock PC sh r 10
1025(g)	Any	Clock Slip Inquiry(#149)			test tone-clock PC sh
1281(h) 1282(h)	Any	None	MINOR	OFF	
1537	Any	Clock PPM Inquiry(#150)			test tone-clock PC sh

Continued on next page

Table 3-322. TDM Bus Clock Error Log Entries — *Continued*

Error Type	Aux Data	Associated Test	Alarm Level	On/Off Board[1]	Test to Clear Value
2049(i)	Any	Standby Reference Health Check Test(#651)	MAJOR[3]	ON	test tone-clock PC
2305(j)	0	None	WARNING	OFF	

1. As a general rule, any *on board* errors against the TDM Bus Clock should be resolved before pursuing any other errors against SPE or PNC components. *Off board* clock errors may be caused by other board errors, and should usually be addressed once any on board errors have been resolved.
2. Run the Short Test Sequence first. If all tests pass, run the Long Test Sequence. Refer to the appropriate test description and follow the recommended procedures.
3. Major or Minor alarms on this MO may have been downgraded to Warning alarms based on the values used in the **set options** command.

Notes:

a. The Tone-Clock circuit pack may have a clock at the edge of its specified frequency. This can is turn cause Remote Neighbor Links (RNLs) and/or Local Neighbor Links LNLs) to go down. When this error is alarmed, Clock Health Inquiry Test (#46) will fail with an error code of 1.

   1. Replace the Tone-Clock circuit pack identified in the error log.

b. The indicated Tone-Clock circuit pack has been made unavailable via the **busyout tone-clock PC** command. To resolve this error, execute the **release tone-clock PC** command for the alarmed circuit pack.

c. This error type indicates that the circuit pack has been removed or has been insane for more than 11 minutes. To clear the error, reinsert or replace the circuit pack.

d. The Tone-Clock circuit pack in the PPN is not a TN780 while a Stratum 3 synchronization is administered. Replace the Tone-Clock in the PPN with a TN780, or change synchronization administration to Stratum 4 if a Stratum 3 clock is not being used.

e. The tone-clock has reported an out-of-lock condition. A aux value of 1 indicates this error is an out-of-lock with the primary reference. A aux value of 2 indicates this error is an out-of-lock with the secondary reference. It could not lock onto the frequency of that synchronization reference. This will lead to a change in the synchronization reference if the condition continues.

f. The Tone-Clock circuit pack may be defective.

1. **If this error was logged against an Active Tone-Clock circuit pack**, then test that circuit pack via the **test tone-clock PC**. If there are error codes from any tests, follow the recommended maintenance procedures for the error code(s) to resolve the problem(s). If all tests pass, consider the 769 error type to have been a transient problem, and clear the error log entry with **test tone-clock PC long clear**.
2. If this error was logged against the Standby Tone-Clock circuit pack, and if the Aux Data value was 18369, Synchronization maintenance acts on this error. No corrective action is required. For all the other Aux Data values, replace the Standby Tone-Clock circuit pack.

g. Tone-Clock circuit pack on-board maintenance has detected one or more *clock slips*, timing differences between its internal reference source and the synchronization signal provided by the master Tone-Clock. Although no clock slip errors are expected during normal operation, both manual and automatic interchanges of Tone-Clock circuit packs, synchronization references, and PNCs, may result in clock slip counts.

   If error 1281 also is logged for the same Tone-Clock circuit pack, it is related to this problem, and should be corrected first. Otherwise, continue with the procedure below.

   1. Use **test tone-clock PC**, and examine the results of test #149 to see if slip errors are still occurring. If no new slip errors are reported, and if these errors are not causing a TDM-CLK alarm, they may be ignored. Use **test tone-clock PC long clear** to clear the errors.
   2. Otherwise, enter the **display errors** command, and follow corrective procedures for any other TDM-CLK, TONE-BD, SYNC, DS1C-BD, EXP-INTF, SNC-BD, and SNI-BD errors logged, except for those in the following table.

Error Log Entries for Slip Errors

Circuit Pack Name	Error Log Name	Error Log Entry for Slips
DS1 Interface	DS1-BD	3073 to 3160
Tone-Clock	TDM-CLK	1025
UDS1 Interface	UDS1-BD	3073 to 3160
DS1C Circuit Pack	DS1C-BD	3329

   3. If 1025 errors persist, refer to SYNC Maintenance.

h. Error Type 1281—This error is an indication that the Tone-Clock circuit pack has detected a loss of timing signal from the system synchronization reference. The Tone-Clock circuit pack has switched synchronization references.

1. Resolve any errors logged against the SYNC or STRAT-13 maintenance objects.
2. Refer to SYNC maintenance if the error is not resolved by step 1

Error Type 1282—Indicates that the TN2182 tone-clock was synchronized to a DS1 facility and that the reference frequency provided by the DS1 drifted beyond a range that could be tracked by the TN2182. Therefore the TN2182 is no longer synchronized to that DS1 reference. If a second DS1 is available, the tone-clock may be synchronized to that reference. If no secondary DS1 reference is available, the tone-clock will run off of its internal clock. This may result in slips being reported by the tone-clock and all DS1 facilities.

i. The tone-clock circuit pack in the master port network was unable to detect the incoming synchronization signal, but the other tone-clock was able to detect the references. If the aux data is 0, the problem is with the signal on the primary. If the aux data is 1, the problem is with the signal on the secondary. The system should switch clocks in this situation.

   1. Replace the Tone-Clock circuit pack.

j. The indicated Tone-Clock circuit pack has detected a loss of timing signal.

   1. Enter **display errors** and **display alarms**, and follow the associated repair procedures for TDM-CLK error log entries that have on-board alarms.
   2. If the 2305 errors persist:
      a. Execute the **test synchronization r 10** command and check to see if new 2305 errors were reported.

      If no new instances of the 2305 errors were logged for either test, then enter **test tone-clock PC long clear** to clear the TDM-CLK errors and the procedure is complete.
   3. For Port Networks with more than one Tone-Clock circuit pack, interchange Tone-Clocks with the **set tone-clock PC**, then run **test synchronization r 10**, and check to see if new 2305 errors are reported against the new Tone-Clock circuit pack. If not, replace the Tone-Clock circuit pack. If this clears the error, the problem has been resolved.
   4. If the problem is still not cleared, and the Tone-Clock circuit pack reported in the error log has not been replaced up to now, replace it.

System Technician-Demanded Tests: Descriptions and Error Codes

Always investigate tests in the order presented in the table below. By clearing error codes associated with the *SAKI Reset Test* for example, you may also clear errors generated from other tests in the testing sequence.

Order of Investigation	Short Test Sequence	Long Test Sequence	Reset Board Sequence	D/ND[1]
SAKI Reset Test (#53) (a)		X		D
Clock Health Test (#46) (b)	X	X		ND
Control Channel Looparound Test (#52) (a)	X	X		ND
Tone Generator Crosstalk Test (#90) (c)		X		ND
Tone Generator Transmission Test (#40) (c)	X	X		ND
Tone Generator Audit/Update Test (#41) (c)	X	X		ND
TDM Bus Clock Circuit Status Inquiry Test (#148)	X	X		ND
TDM Bus Clock PPM Inquiry Test (#150)	X	X		ND
TDM Bus Clock Parameter Update Test (#151)	X	X		ND
Board Type Check Test (#574)	X	X		ND

1. D = Destructive; ND = Nondestructive

Notes:

a. Refer to “XXX-BD” for descriptions of these tests.

b. Refer to “TONE-BD” for a description of this test.

c. Refer to “TONE-PT” for descriptions of these tests.

TDM Bus Clock Circuit Status Inquiry Test (#148)

The TDM Bus Clock circuitry is checked for sanity. Any problems that are found are reported via error codes

Table 3-323. TEST #148 TDM Bus Clock Circuit Status Inquiry Test

Error Code	Test Result	Description/ Recommendation
None 1001	ABORT	The system could not allocate the necessary resources for the test. 1. Wait 1 minute, and retry the test.
2000	ABORT	Response to the test request was not received within the allowable time period.
2100	ABORT	System resources required to run this test are not available. 1. Retry the command at 1-minute intervals a maximum of 5 times.
1	FAIL	This error means the Tone-Clock circuit pack framing verification firmware reports an error in the clock synchronization signal coming into this Port Network. 1. If the Tone-Clock circuit pack reporting the problem is a master clock, then the system synchronization reference is providing a bad timing source. Refer to SYNC (Synchronization) Maintenance documentation to change the system synchronization reference. 2. If the Tone-Clock circuit pack is a slave clock, then the EI to which it is listening is providing a bad timing source. Follow the diagnostic procedures specified for TDM-CLK Error Code 2305. 3. If no problem can be found with the incoming synchronization signal, replace the Tone-Clock circuit pack.
2	FAIL	This error indicates that Tone-Clock circuit pack has inaccurately detected loss of signal on the incoming synchronization timing source.
4 or 8	FAIL	The local oscillator on the Tone-Clock circuit pack has failed.
16 or 32	FAIL	The circuitry on the Tone-Clock circuit pack used to detect synchronization timing errors has failed. 1. Errors 2, 4, 8, 16, and 32 indicate that there is poor synchronization between port networks and external facilities. It may be noticeable to the customer in the form of errors in data communications. The Tone-Clock circuit pack is defective.
64	FAIL	This message is only sent when an uplink message has reported the loss of valid synchronization timing information coming into this Port Network. It has been reported in TDM-CLK Error Log entries; one or more of 1025, 1281, 1537, 2049 and 2305. 1. Resolve the errors indicated. No separate corrective action is required.

Continued on next page

Table 3-323. TEST #148 TDM Bus Clock Circuit Status Inquiry Test — *Continued*

Error Code	Test Result	Description/ Recommendation
65	FAIL	The tone-clock is currently not able to lock on to the current synchronization reference. If this tone-clock is in the master port networK: 1. Examine the error log for any DS1-BD, SYNC or other TDM-CLK errors and resolve as applicable. 2. Run this test again via the **test tone-clock PC** command. 3. Examine the DS1 measurements to determine if the facility is healthy. 4. Adminsiter a new synchronization reference. 5. Replace the DS1 board currently supplying the reference. If this tone-clock is in the slave port networK: 1. Examine the error log for any SYNC or other TDM-CLK errors. 2. Run this test again via the **test tone-clock PC** command.
66	FAIL	There is an on-board failure of TDM clock hardware. 1. Replace the Tone-Clock circuit pack.
	PASS	TDM Bus Clock Circuit Status is sane. There are no clock-detection circuit problems on the Tone-Clock circuit pack.

TDM Bus Clock PPM Inquiry Test (#150)

This test evaluates the quality of the synchronization source for the Tone-Clock circuit pack

Table 3-324. TEST #150 TDM Bus Clock PPM Inquiry Test

Error Code	Test Result	Description/ Recommendation
	ABORT	The system could not allocate the necessary resources for the test.
1001	ABORT	The system could not allocate the necessary resources for the test. 1. Wait 1 minute, and retry the test.

Continued on next page

Table 3-324. TEST #150 TDM Bus Clock PPM Inquiry Test — *Continued*

Error Code	Test Result	Description/ Recommendation
255	ABORT	The Tone-Clock circuit pack was using its local oscillator rather than synchronizing to an external source. 1. Verify that this Tone-Clock circuit pack is expected to be the synchronization source. If not, correct the synchronization information and re-execute the test.
2000	ABORT	Response to the test request was not received within the allowable time period.
2100	ABORT	System resources required to run this test are not available. 1. Retry the command at 1-minute intervals a maximum of 5 times.
Any	FAIL	The error code represents the rate (in Parts Per Million, or PPM) at which clock slip errors have been detected on the incoming synchronization source since the last PPM inquiry was sent to the Tone-Clock circuit pack. A failure of this test indicates that we are outside of Stratum 4 timing specifications on the incoming timing source. The error code is a variable amount ranging from 1 to 254. 1. If error 1537 is entered in the hardware error log against TDM-CLK, then the board has switched timing sources. Follow the procedures associated with hardware log error code 1537. 2. Otherwise, refer to "Approach to Troubleshooting" in the Synchronization (SYNC) Maintenance section of this manual.
	PASS	The Tone-Clock circuit pack does not detect timing any PPM errors. This indicates that the external synchronization timing source is valid or that the system synchronization reference is a Tone-Clock circuit pack. The **status synchronization** command should be used to verify that the desired synchronization reference is providing timing for the system.

TDM Bus Clock Parameter Update Test (#151)

This test updates the following internal parameters on the Tone-Clock circuit pack:

- Disable in-line duplication status messages.
- Set the PPM threshold at 85 PPM for TN2182.
- Enable PPM threshold switching
- Set the number of slips to trigger *loss of signal* - currently 30 per 5 millisecond period
- Enable the on-board synchronization switching algorithm (see above)

- Enable holdover operation (TN2182 only).

This is not a test and will always pass without identifying or reporting any Tone-Clock circuit pack errors

Table 3-325. TEST #151 TDM Bus Clock Parameter Update Test

Error Code	Test Result	Description/ Recommendation
	ABORT	Internal System Error
	FAIL	Internal System Error 1. Retry the command at 1-minute intervals a maximum of 5 times.
	PASS	The Tone-Clock circuit pack parameters have been successfully updated.

TIE-BD (Tie Trunk Circuit Pack)

MO Name (in Alarm Log)	Alarm Level	Initial Command to Run[1]	Full Name of MO
TIE-BD	MIN	test board PCSS sh	Tie Trunk Circuit Pack
TIE-BD	WRN	test board PCSS sh	Tie Trunk Circuit Pack

1. Where P is the port network number (1); C is the carrier designation (for example, A, B, or C); and SS is the address of the slot in the carrier where the circuit pack is located (for example, 01, 02, ..., etc.).

Refer to "XXX-BD (Common Port Circuit Pack)" Maintenance documentation for circuit pack level errors. See also "TIE-TRK (Tie Trunk)".

TIE-DS1 (DS1 Tie Trunk)

MO Name (in Alarm Log)	Alarm Level	InitialCommand to Run	Full Name of MO
TIE-DS1[1]	MAJOR[2]	test trunk <grp/mbr> l	DS1 Tie Trunk
TIE-DS1	MINOR	test trunk <grp/mbr> l	DS1 Tie Trunk
TIE-DS1	WARNING	test trunk <grp/mbr>	DS1 Tie Trunk

1. For additional repair information, see also DS1-BD (DS1 Interface Circuit Pack) Maintenance documentation.
2. A MAJOR alarm on a trunk indicates that alarms on these trunks are not downgraded by the **set options** command and that at least 75 percent of the trunks in this trunk group are alarmed.

The DS1 tie trunk provides both voice and data inter-PBX communication. A 24 channel DS1 Interface circuit pack can support up to 24 digital tie trunks through a 1.544 Mbps DS1 link. A 32 channel DS1 Interface circuit pack can support up to 30 digital tie trunks through a 2.048 Mbps DS1 link. DS1 Interface circuit packs are described in DS1-BD. DS1 Tie Trunks are used widely in the DCS and Central Attendant Service (CAS) features of the system.

A DS1 tie trunk can also be used as an access endpoint which is a non-signaling channel with a bandwidth of voice-grade-data, 56K-data or 64K-data.

DS1 tie trunk maintenance provides a strategy to maintain a DS1 tie trunk via a port on the DS1 Interface circuit pack. The maintenance strategy covers logging DS1 tie trunk hardware errors, running tests for trunk initialization, periodic and scheduled maintenance, system technician-demanded tests, and alarm escalation and resolution. Three different trunk service states are specified in the DS1 tie trunk maintenance. They are: *out-of-service* in which the trunk is in a deactivated state and cannot be used for either incoming or outgoing calls; *in-service* in which the trunk is in an activated state and can be used for both incoming and outgoing calls; *disconnect* (ready-for-service) in which the trunk is in an activated state but can only be used for an incoming call. If the DS1 Interface circuit pack is out-of-service, all trunks on the DS1 Interface circuit pack are placed into out-of-service state, and a Warning alarm is raised.

Hardware Error Log Entries and Test to Clear Values

Table 3-326. DS1 Tie Trunk Error Log Entries

Error Type	Aux Data	Associated Test	Alarm Level	On/Off Board	Test to Clear Value
0[1]	0	Any	Any	Any	test trunk <grp>/<mbr> sh r 1>
1 (a)	57476 57477 57485 57487				
15 (b)	Any	Port Audit and Update Test (#36)			
18 (c)	0	busyout trunk <grp>/<mbr>	WARNING	OFF	release trunk <grp>/<mbr>
130 (d)		None	WARNING	ON	test trunk <grp>/<mbr>
257 (e)	57473 57474				
513(f)	57392	DS1 Tie Trunk Seizure Test (#136)	MIN/MAJ[2]		
769(g)	57393	DS1 Tie Trunk Seizure Test (#136)	MIN/MAJ[2]		
1025		DS1 Tie Trunk Seizure (Test #136)	MAJ/MIN/ WRN[3]	OFF	test trunk <grp>/<mbr> r 2
1281		Conference Circuit (Test #7)	MAJ/MIN/ WRN[3]	ON	test trunk <grp>/<mbr> l r 4
1537		NPE Crosstalk Test (#6)	MAJ/MIN/ WRN[3]	ON	test trunk <grp>/<mbr> l r 3
1793 (h)					test board PCSS long
2305(i)	50944	DS1 Tie Trunk Seizure Test (#136)	MIN/MAJ[3]	OFF	

1. Run the Short Test Sequence first. If all tests pass, run the Long Test Sequence. Refer to the appropriate test description and follow the recommended procedures.
2. This alarm will only be raised when the System-Parameter Country form has the Base Tone Generator field set to 4 (Italy). This alarm will be a MINOR alarm unless 75% or more trunks in this trunk group are out of service, then the alarm will be upgraded to a MAJOR alarm.
3. Minor alarms on this MO may be downgraded to Warning alarms based on the values used in the **set options** command. If the MINOR alarm is not downgraded by the **set options** values, the MINOR alarm is upgraded to a MAJOR alarm if 75 percent of the trunks in this trunk group are alarmed.

Notes:

a. Error Type 1—The DS1 Interface circuit pack detects a hardware error on the DS1 tie trunk. This error can be caused by incompatible translations. Make sure the parameters administered on the DS1 circuit pack form match those administered on the far-end switch.

   The Aux Data field indicates the following hardware error types:

57476	On-hook before wink
57477	On-hook before ready to receive digits
57485	Wink too short for valid signal
57487	The timer expired while waiting for an off-hook signal from the far end as a response at end of digits dialing. Check the far-end switch for related problems.

   If all administration errors between the switch and the far-end match, and these errors continue to recur, follow normal escalation procedures.

b. Error Type 15—This is a software audit error that does not indicate any hardware malfunction. Run Short Test Sequence and investigate associated errors (if any).

c. Error Type 18—The DS1 tie trunk has been busied out by a **busyout trunk** grp/mbr command. No calls can be made on this trunk except for the Facility Access Test Call.

d. Error Type 130—This error type indicates that the circuit pack has been removed or has been insane for more than 11 minutes. To clear the error, reinsert or replace the circuit pack.

e. Error Type 257—The DS1 Interface circuit pack detects a hardware error on the DS1 tie trunk. The trunk cannot communicate with the far end because it is unable to interpret digits sent from the far-end switch. The Aux Data field indicates the following:

57473	The rotary dial rate is below 8 pulses per second.
57474	The rotary dial rate is above 12 pulses per second.

   Check with the far-end switch or operating company for proper trunk connection.

f. Error Type 513—DS1 Interface circuit pack detects a hardware error on the DS1 tie trunk. The trunk is in-service/active and waiting for an ‘‘on-hook’’ from the far-end switch. No calls can be routed over the trunk while it is in this state. Aux Data 57392 indicates no external release on PBX disconnect. Check with the far-end switch or operating company for proper trunk connection.

g. Error Type 769—The DS1 Interface circuit pack detects a hardware error on the DS1 tie trunk. This error usually occurs after one or more occurrences of error type 513. The trunk has received the belated

''on-hook'' that it has been waiting for from the far-end switch. The trunk is restored to in-service/idle and can be used for calls. Aux Data 57393 indicates delayed external release on PBX disconnect. This error can be ignored.

h. Error Type 1793—The DS1 Interface circuit pack is out-of-service. See the appropriate DS1-BD/UDS1-BD (DS1/UDS1 Interface Circuit Pack) Maintenance documentation for details.

i. Error Type 2305—Reorder message. The trunk could not be seized. This error will cause the Trunk Seizure Test (#136) to run and is only considered a problem if the Seizure Test fails (in which case Error Type 1025 will also show up). In this case, the trunk may be put in ''Ready-for-Service'' state (shown as ''disconnected'' by the status command), which allows only incoming calls. Run the Trunk Seizure Test (#136) and follow its outlined procedures.

j. Error Type 2562—Retry Failure error. This error is logged only. It is not a hardware failure and hence does not start any testing or generate any alarms. This error comes from call processing and is generated when a second attempt (retry) to seize an outgoing trunk fails.

k. Error Type 2817—Glare error. This error is logged only. It is not a hardware failure and hence does not start any testing or generate any alarms. This error is the result of a simultaneous seizure of a two-way trunk from both the near-end and the far-end. Attempt to place the call again. If the error persists, execute the DS1 Tie Trunk Seizure Test (#136) and follow its outlined procedures.

l. Error Type 3840—Port Audit and Update Test (#36) failed due to an internal system error. Enter **status trunk** command and verify the status of the trunk. If the trunk is out-of-service, then enter **release trunk** command to put it back to in-service. Retry the test command.

System Technician-Demanded Tests: Descriptions and Error Codes

Always investigate tests in the order presented in the table below when inspecting errors in the system. By clearing error codes associated with the

NPE Crosstalk Test, for example, you may also clear errors generated from other tests in the testing sequence.

Order of Investigation	Short Test Sequence	Long Test Sequence	D/ND[1]
NPE Crosstalk Test (#6)		X	ND

Order of Investigation	Short Test Sequence	Long Test Sequence	D/ND[1]
Conference Circuit Test (#7)		X	ND
DS1 Tie Trunk Seizure Test (#136)	X	X	ND
Port Audit and Update Test (#36)	X	X	ND

1. D = Destructive; ND = Nondestructive

NPE Crosstalk Test (#6)

One or more NPEs reside on each circuit pack with a TDM Bus interface. The NPE controls port connectivity and gain, and provides conferencing functions on a per port basis. The NPE Crosstalk Test verifies that this port's NPE channel talks on the selected time slot and never crosses over to time slots reserved for other connections. If the NPE is not working correctly, one-way and noisy connections may be observed. This test is usually only part of a port's Long Test Sequence and takes on the order of 20 to 30 seconds to complete.

Table 3-327. TEST #6 NPE Crosstalk Test

Error Code	Test Result	Description/ Recommendation
	ABORT	System resources required for this test are not available. 1. Retry the command at 1-minute intervals a maximum of 5 times.
1000	ABORT	System resources required to run this test were not available. The port may be busy with a valid call. Use the **display port PCSSpp** command to determine the trunk group/member number of the port. Use the **status trunk** command to determine the service state of the port. If the service state indicates that the port is in use, then the port is unavailable for certain tests. You must wait until the port is idle before retesting. 1. If the port status is active but the port is not in use (no calls), check the error log for error type 1025 (see the error log table for a description of this error and required actions). The port may be locked up. 2. If the port status is idle, retry the command at 1-minute intervals for a maximum of 5 times.
1001	ABORT	System resources required to run this test are not available. 1. Retry the command at 1-minute intervals for a maximum of 5 times.

Continued on next page

Table 3-327. TEST #6 NPE Crosstalk Test — *Continued*

Error Code	Test Result	Description/ Recommendation
1002	ABORT	The system could not allocate time slots for the test. The system may be under heavy traffic conditions, or it may have time slots out of service due to TDM-BUS errors. Refer to the TDM-BUS (TDM bus) Maintenance Documentation to diagnose any active TDM-BUS errors. 1. If the system has no TDM-BUS errors and is not handling heavy traffic and the port status is idle, retry the command at 1-minute intervals for a maximum of 5 times.
1003	ABORT	The system could not allocate a tone receiver for the test. The system may be oversized for the number of tone detectors present or some of the tone detectors may be out of service. Issue the **list measurements tone-receiver** command to display basic information about the system's tone receivers. 1. Look for TTR-LEV errors in the error log. If present, refer to the TTR-LEV Maintenance documentation. 2. Look for TONE-PT errors in the error log. If present, refer to the TONE-PT Maintenance documentation. 3. If neither condition exists, retry the test at 1-minute intervals for a maximum of 5 times.
1004	ABORT	The port was seized by a user for a valid call. Use the **display port PCSSpp** command to determine the trunk group/member number of the port. Use the **status trunk** command to determine the service state of the port. If the service state indicates that the port is in use, then the port is unavailable for certain tests. You must wait until the port is idle before retesting. 1. If the port status is idle, retry the command at 1-minute intervals for a maximum of 5 times.
1020	ABORT	The test did not run because of a previously existing error on the specific port or a more general circuit pack error. 1. Examine the Error Log for existing errors against this port or the circuit pack and attempt to diagnose the already existing error.
2000	ABORT	Response to the test request was not received within the allowable time period.
2100	ABORT	System resources required for this test are not available. 1. Retry the command at 1-minute intervals a maximum of 5 times.

Continued on next page

Table 3-327. TEST #6 NPE Crosstalk Test — *Continued*

Error Code	Test Result	Description/ Recommendation
2053	ABORT	At least one of the following errors is found on the DS1 circuit pack: 1281—Loss of signal, 1793—Blue Alarm, 2049—Red Alarm, 2305—Yellow Alarm, 1537—Hyperactivity. Look for the above error types in the Hardware Error Log and follow the procedures given in the appropriate DS1-BD or UDS1-BD maintenance documentation for the listed error types.
	FAIL	This can be due to on-board or off-board problems. Off-board problems of concern include EXP-PN and EXP-INTF faults, TDM-BUS faults, and faults associated with the tone detectors/tone generators. Clear all off-board problems before replacing the board. Keep in mind that a TDM-BUS problem is usually the result of a faulty board connected to the backplane or bent pins on the backplane. 1. Look for EXP-PN and/or EXP-INTF errors in the error log. If present, refer to the EXP-PN Maintenance documentation and the EXP-INTF Maintenance documentation. 2. Look for TDM-BUS errors in the error log. If present, refer to the TDM-BUS Maintenance documentation. 3. Look for TONE-BD and/or TONE-PT errors in the error log. If present, refer to the TONE-BD Maintenance documentation and the TONE-PT Maintenance documentation. 4. Retest when the faults from steps 1, 2, and 3 are cleared. Replace the board only if the test fails.
	PASS	The port is correctly using its allocated time slots. User-reported troubles on this port should be investigated using other port tests and by examining station, trunk, or external wiring.
0	NO BOARD	The test could not relate the internal ID to the port (no board). This could be due to incorrect translations, no board is inserted, an incorrect board is inserted, or an insane board is inserted. 1. Check to ensure that the board translations are correct. Use the **list config** command, and resolve any problems that are found. 2. If the board was found to be correctly inserted in step 1, issue the **busyout board** command. 3. Issue the **reset board** command. 4. Issue the **release busy board** command. 5. Issue the **test board long** command. This should re-establish the linkage between the internal ID and the port. If this is not the case, check to see that there is a valid board inserted.

Conference Circuit Test (#7)

One or more NPEs reside on each circuit pack with a TDM Bus interface. The NPE controls port connectivity and gain, and provides conferencing functions on a per-port basis. The Conference Circuit Test verifies that the NPE channel for the port being tested can correctly perform the conferencing function. The NPE is instructed to listen to several different tones and conference the tones together. The resulting signal is then measured by a Tone Detector port. If the level of the tone is within a certain range, the test passes.

Table 3-328. TEST #7 Conference Circuit Test

Error Code	Test Result	Description/ Recommendation
	ABORT	System resources required for this test are not available. 1. Retry the command at 1-minute intervals a maximum of 5 times.
1000	ABORT	System resources required to run this test were not available. The port may be busy with a valid call. Use the **display port PCSSpp** command to determine the trunk group/member number of the port. Use the **status trunk** command to determine the service state of the port. If the service state indicates that the port is in use, then the port is unavailable for certain tests. You must wait until the port is idle before retesting. 1. If the port status is active but the port is not in use (no calls), check the error log for error type 1025 (see the error log table for a description of this error and required actions). The port may be locked up. 2. If the port status is idle, retry the command at 1-minute intervals for a maximum of 5 times.
1002	ABORT	The system could not allocate time slots for the test. The system may be under heavy traffic conditions, or it may have time slots out of service due to TDM-BUS errors. The **status health** command can be used to determine if the system is experiencing heavy traffic. Refer to the TDM-BUS (TDM bus) Maintenance Documentation to diagnose any active TDM-BUS errors. 1. If the system has no TDM-BUS errors and is not handling heavy traffic and the port status is idle, retry the command at 1-minute intervals for a maximum of 5 times.

Continued on next page

Table 3-328. TEST #7 Conference Circuit Test — *Continued*

Error Code	Test Result	Description/ Recommendation
1003	ABORT	The system could not allocate a tone receiver for the test. The system may be oversized for the number of tone detectors present or some of the tone detectors may be out of service. Issue the **list measurements tone-receiver** command to display basic information about the system's tone receivers. 1. Look for TTR-LEV errors in the error log. If present, refer to the TTR-LEV Maintenance documentation. 2. Look for TONE-PT errors in the error log. If present, refer to the TONE-PT Maintenance documentation. 3. If neither condition exists, retry the test at 1-minute intervals for a maximum of 5 times.
1004	ABORT	The port was seized by a user for a valid call. Use the **display port PCSSpp** command to determine the trunk group/member number of the port. Use the **status trunk** command to determine the service state of the port. If the service state indicates that the port is in use, then the port is unavailable for certain tests. You must wait until the port is idle before retesting. 1. If the port status is idle, retry the command at 1-minute intervals for a maximum of 5 times.
1018	ABORT	Test disabled via administration. This only applies to analog stations. 1. To enable test, set the Test field on the station administration screen for the particular analog station being tested to "y." Use the **change station <extension>** command.
1020	ABORT	The test did not run due to a previously existing error on the specific port or because of a more general circuit pack error. 1. Examine the Error Log for existing errors against this port or circuit pack, and attempt to diagnose the previously existing error.
2000	ABORT	Response to the test request was not received within the allowable time period.
2100	ABORT	System resources required to run this test are not available. 1. Retry the command at 1-minute intervals a maximum of 5 times.
2053	ABORT	At least one of the following errors is found on the DS1 circuit pack: 1281—Loss of signal, 1793—Blue Alarm, 2049—Red Alarm, 2305—Yellow Alarm, 1537—Hyperactivity. Look for the above error types in the Hardware Error Log and follow the procedures given in the appropriate DS1-BD or UDS1-BD maintenance documentation for the listed error types.

Continued on next page

Table 3-328. TEST #7 Conference Circuit Test — *Continued*

Error Code	Test Result	Description/ Recommendation
	FAIL	The NPE of the tested port did not conference the tones correctly. This can cause noisy and unreliable connections. 1. Enter the **list configuration board PCSS** command. If the circuit pack is a TN767B vintage 8 or 9, replace the circuit pack with a TN767C V3 or later. The error log may have error type 1281 entries. 2. Test all administered trunks on the board. If one fails, this could be an off-board problem (such as an incoming seizure or an off-hook port seizure during the test). Retest the board. 3. If all of the ports fail, check the CARR-POW (see note below). 4. If several ports fail, check the error log for TONE-BD or TONE-PT errors. If there are such errors, take the appropriate action. When the TONE errors have cleared, rerun the test. 5. If the retry passes and troubles have been reported, coordinate isolation with the far-end PBX. Make sure that the near-end and far-end switches and any NTCE equipment (the CSU's) have the correct administration.
	FAIL *(con't.)*	6. Replace the circuit pack. **NOTE:** If the conference circuit test fails for all ports on a circuit pack, a -5 volt power problem is indicated.
	PASS	The port can correctly conference multiple connections. User-reported troubles on this port should be investigated using other port tests and by examining station, trunk, or external wiring.
0	NO BOARD	The test could not relate the internal ID to the port (no board). This could be due to incorrect translations, no board is inserted, an incorrect board is inserted, or an insane board is inserted. 1. Check to ensure that the board translations are correct. Use the **list config** command, and resolve any problems that are found. 2. If the board was found to be correctly inserted in step 1, issue the **busyout board** command. 3. Issue the **reset board** command. 4. Issue the **release busy board** command. 5. Issue the **test board long** command. This should re-establish the linkage between the internal ID and the port. If this is not the case, check to see that there is a valid board inserted.

Port Audit and Update Test (#36)

This test sends port level translation data from switch processor to the DS1 Interface circuit pack to ensure that the trunk's translation is correct. Translation updates include the following data: trunk type (in/out), dial type, timing parameters, and signaling bits enabled. The port audit operation verifies the consistency of the current state of the trunk kept by the DS1 Interface circuit pack and the switch software.

Table 3-329. TEST #36 Audit and Update Test

Error Code	Test Result	Description/ Recommendation
	ABORT	Internal System Error. 1. Retry the command at 1-minute intervals a maximum of 5 times.
1000	ABORT	System resources required to run this test were not available. The port may be busy with a valid call. Use the **display port PCSSpp** command to determine the trunk group/member number of the port. Use the **status trunk** command to determine the service state of the port. If the service state indicates that the port is in use, then the port is unavailable for certain tests. You must wait until the port is idle before retesting. 1. If the port status is active but the port is not in use (no calls), check the error log for error type 1025 (see the error log table for a description of this error and required actions). The port may be locked up. 2. If the port status is idle, retry the command at 1-minute intervals for a maximum of 5 times.
1006	ABORT	The test was aborted because the trunk is out of service. 1. Use the **status trunk** command to verify that the trunk is out of service. 2. If the trunk is out of service, determine why. 3. If it is OK to put the trunk back in service, issue the **release trunk** command to put the trunk back in service, and then retry the test.
2000	ABORT	Response to the test request was not received within the allowable time period.
2100	ABORT	Could not allocate the necessary system resources to run this test. 1. Retry the command at 1-minute intervals a maximum of 5 times.
	FAIL	Internal System Error. 1. Retry the command at 1-minute intervals a maximum of 5 times.

Continued on next page

Table 3-329. TEST #36 Audit and Update Test — *Continued*

Error Code	Test Result	Description/ Recommendation
	PASS	Trunk translation has been updated successfully. The current trunk states kept in the DS1 Interface circuit pack and switch software are consistent. If the trunk is busied out, the test does not run, but it does return PASS. To verify that the trunk is in-service: 1. Enter **status trunk** command to verify that the trunk is in-service. If the trunk is in-service, no further action is necessary. If the trunk is out-of-service, continue to Step 2. 2. Enter **release trunk** command to put trunk back into in-service. 3. Retry the test command.
0	NO BOARD	The test could not relate the internal ID to the port (no board). This could be due to incorrect translations, no board is inserted, an incorrect board is inserted, or an insane board is inserted. 1. Check to ensure that the board translations are correct. Use the **list config** command, and resolve any problems that are found. 2. If the board was found to be correctly inserted in step 1, issue the **busyout board** command. 3. Issue the **reset board** command. 4. Issue the **release busy board** command. 5. Issue the **test board long** command. This should re-establish the linkage between the internal ID and the port. If this is not the case, check to see that there is a valid board inserted.

DS1 Tie Trunk Seizure Test (#136)

The DS1 Tie Trunk Seizure Test is run to verify the trunk's signaling capability. The test is composed of two parts. The first part queries the circuit pack for the following errors: Loss of Signal, Red Alarm, Blue Alarm, Yellow Alarm, and Hyperactivity Alarm. The second part of the test is performed by sending a seizure message to the DS1 Interface circuit pack and expecting an active reply by the DS1 Interface circuit pack. If maintenance software does not receive any reply and the timer expires, the test is aborted. Once the active message is received, a dial pause message is sent to the DS1 Interface circuit pack. If the DS1 Interface circuit pack replies with a dial pulse tone message when the far end responds to the seizure, then the DS1 tie trunk Seizure Test passes. If the far end does not respond to the seizure and the timer expires, and the DS1 Interface circuit pack sends a reorder message back to the maintenance software, then the test fails.

This second part of this test **CANNOT** be run on a trunk if one of the following cases is true:

1. The trunk direction is administered as an incoming only trunk.
2. The trunk is the 24th port on a DS1 Interface circuit pack which is administered using 24th Common Channel Signaling.
3. The trunk has been seized by a normal trunk call.
4. The trunk is administered with maintenance test disabled.
5. The outgoing signal type of the trunk is either automatic or immediate-start.

Table 3-330. TEST #136 DS1 Tie Trunk Seizure Test

Error Code	Test Result	Description/ Recommendation
	ABORT	Internal System Error.
1000	ABORT	System resources required to run this test were not available. The port may be busy with a valid call. Use the **display port PCSSpp** command to determine the trunk group/member number of the port. Use the **status trunk** command to determine the service state of the port. If the service state indicates that the port is in use, then the port is unavailable for certain tests. You must wait until the port is idle before retesting. 1. If the port status is active but the port is not in use (no calls), check the error log for error type 1025 (see the error log table for a description of this error and required actions). The port may be locked up. 2. If the port status is idle, retry the command at 1-minute intervals for a maximum of 5 times.
1004	ABORT	Far end is seizing the trunk while the test is ongoing. A glare situation is detected. Current test is designed to be aborted. Use the **display port PCSSpp** command to determine the trunk group/member number of the port. Use the **status trunk** command to determine the service state of the port. If the service state indicates that the port is in use, then the port is unavailable for certain tests. You must wait until the port is idle before retesting. 1. If the port status is idle, retry the command at 1-minute intervals for a maximum of 5 times.

Continued on next page

Table 3-330. TEST #136 DS1 Tie Trunk Seizure Test — *Continued*

Error Code	Test Result	Description/ Recommendation
1005	ABORT	Test failed due to incompatible configuration administered in trunk group form. 1. Verify the following fields on the trunk group administration screen: a. Is trunk direction incoming only? b. Is trunk outgoing type either automatic or immediate-start? c. Is trunk the 24th port of the DS1 Interface circuit pack while common control channel signaling is specified? 2. If the trunk has been administered using the above information, then this test should abort.
1018	ABORT	The test was disabled via translation. You may want to determine why the test has been disabled before you enable it. 1. Verify that the `Maintenance Test` field on the Trunk Administration screen is set to **n**. To enable the test, change the trunk administration and enter **y** into the `Maintenance Test` field. 2. Repeat the test.
1020	ABORT	The test did not run due to an already existing error on the specific port or due to a more general circuit pack error. 1. Examine the error log for existing errors against this port or the circuit pack and attempt to diagnose the already existing error. 2. Retry the test.
1040	ABORT	This test is not performed for trunk ports administered as access endpoints. 1. Verify this port is an access endpoint by using the **display port** command. 2. If the port has been administered as an access endpoint, this test should abort.
2000	ABORT	Response to the test request was not received within the allowable time period.
2100	ABORT	Could not allocate the necessary system resources to run this test. 1. Retry the command at 1-minute intervals for a maximum of 5 times.
2053	ABORT/ FAIL(1)	At least one of the following errors is found on the circuit pack: 1281: Loss of Signal, 1793: Blue Alarm, 2049: Red Alarm, 2305: Yellow Alarm, 1537: Hyperactivity. 1. Look for the above error types in the Hardware Error Log and follow the procedures given in the DS1-BD tests for the listed error types.

Continued on next page

Table 3-330. TEST #136 DS1 Tie Trunk Seizure Test — *Continued*

Error Code	Test Result	Description/ Recommendation
	FAIL	The far-end trunk did not respond to the seizure of the near-end trunk within the allowable time period. This test could have associated in-line errors in the error log. 1. 1) Enter the **list configuration board PCSS** command. If the circuit pack is a TN767B vintage 8 or 9, a failure of test 136 causes a subsequent failure of test 7 due to a firmware bug. Eventually, the board and all of its ports will be taken out of service and extraneous on-board alarms will be generated. Replace the circuit pack with a TN767C V3 or later. 2. Verify that the 'Trunk Type' field on the 'Trunk Administration' screen matches the trunk type administered on far-end switch. 3. Look for DS1-BD or UDS1-BD errors in the hardware error log. If present, refer to the DS1-BD (DS1 trunk circuit pack) Maintenance documentation or to the UDS1-BD (UDS1 trunk circuit pack) Maintenance documentation. 4. Retry the test at 1-minute intervals for a maximum of 5 times.
2000	FAIL	Response to the seizure message was not received within the allowable time period. 1. Enter the **list configuration board PCSS** command. If the circuit pack is a TN767B vintage 8 or 9, a failure of test 136 causes a subsequent failure of test 7 due to a firmware bug. Eventually, the board and all of its ports will be taken out of service and extraneous on-board alarms will be generated. Replace the circuit pack with a TN767C V3 or later. 2. Verify that the `Trunk Type` field on the Trunk Administration screen matches the trunk type administered on far-end switch. 3. Look for DS1-BD or UDS1-BD errors in the hardware error log. If present, refer to the DS1-BD (DS1 trunk circuit pack) Maintenance documentation or to the UDS1-BD (UDS1 trunk circuit pack) Maintenance documentation. 4. Retry the test at 1-minute intervals for a maximum of 5 times.
	PASS	The trunk can be seized for an outgoing call.

Continued on next page

Table 3-330. TEST #136 DS1 Tie Trunk Seizure Test — *Continued*

Error Code	Test Result	Description/ Recommendation
0	NO BOARD	The test could not relate the internal ID to the port (no board). This could be due to incorrect translations, no board is inserted, an incorrect board is inserted, or an insane board is inserted. 1. Check to ensure that the board translations are correct. Use the **list config** command, and resolve any problems that are found. 2. If the board was found to be correctly inserted in step 1, issue the **busyout board** command. 3. Issue the **reset board** command. 4. Issue the **release busy board** command. 5. Issue the **test board long** command. This should re-establish the linkage between the internal ID and the port. If this is not the case, check to see that there is a valid board inserted.

(1) Earlier G1 Software Versions reported Error Code 2053 as a FAIL

TIE-TRK (Tie Trunk)

MO Name (in Alarm Log)	Alarm Level	Initial Command to Run[1]	Full Name of MO
TIE-TRK[2]	MAJOR[3]	test port PCSSpp l	Tie Trunk
TIE-TRK	MINOR	test port PCSSpp l	Tie Trunk
TIE-TRK	WARNING	test port PCSSpp sh	Tie Trunk

1. Where P is the port network number (1); C is the carrier designation (for example, A, B, or C); SS is the address of the slot in the carrier where the circuit pack is located (for example, 01, 02, ..., etc.); and pp is the 2-digit port number (for example, 01).
2. Not relevant to the TN497 circuit pack.
3. A Major alarm on a trunk indicates that alarms on these trunks are not downgraded by the **set options** command and that at least 75 percent of the trunks in this trunk group are alarmed. (This is not relevant to the TN497 circuit pack.)

NOTE:
If ATMS testing is enabled, check the error log for ATMS Errors #3840 and #3841. If the error log indicates that measurements exceeded acceptable thresholds, and if no other trouble is found with the **test trunk** command, run the ATMS test call with the **test analog-testcall port PCSSpp full** command.

The following circuit packs are covered by this section of TIE-TRK (Tie Trunk):

- TN497
- TN2140B

The Tie Trunk circuit pack fits into a port slot and contains four trunk circuits (see Figure 3-30). Each tie trunk for the TN497 circuit packs has 2-wire audio connection/signal leads (A and B).

A tie trunk port can also be administered as an access endpoint, which is a non-signaling channel with a voice-grade data bandwidth.

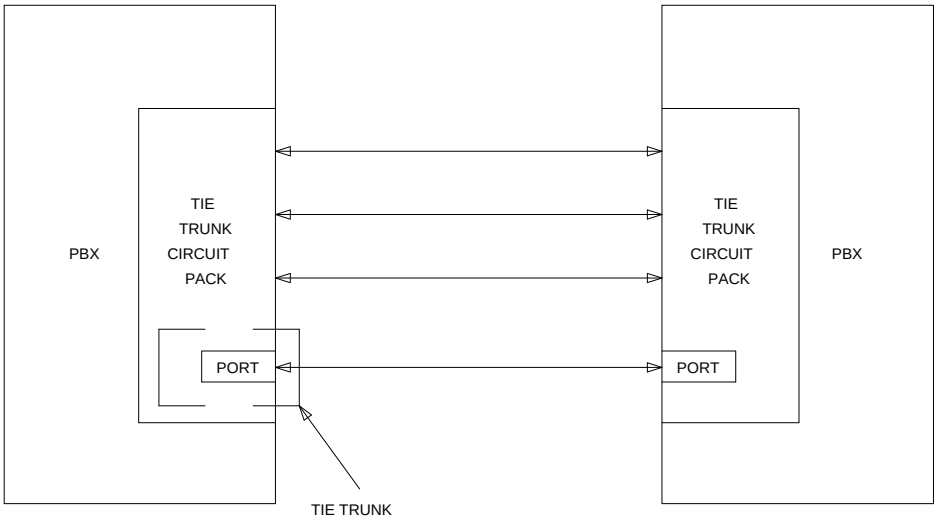

Figure 3-30. Tie Trunk Interactions

The number of tests to be implemented for Tie Trunk maintenance depends upon the TIE-TRK circuit packs involved. The test are as follows:

1. NPE Crosstalk Test—Verifies the switch connection operation of the circuit pack. It verifies that the trunk circuitry talks only on the selected time slot on the TDM Bus and that it never crosses over to time slots reserved for other connections.

2. Loop Around and Conference Circuit Test—Verifies the transmission operation of the circuit pack. It verifies that signals are transmitted to and from each port (Loop Around within the port), and it tests the conference capabilities of all ports.

   This test may fail due to noise induced by adjacent electric power lines. Customers having this problem should resolve it with their local power company. To temporarily alleviate the alarm caused by the failure of this test, the test may be disabled from trunk administration test field.

3. Several seizure tests, including the following:

   — Tie Trunk Seizure Test verifies the seizure capabilities of the circuit pack. For the TN2140B circuit pack, this test activates the M lead and checks for a response from the distant end within 10 seconds. This test ABORTS on trunk ports administered as access endpoints.

— Seizure Test (for TN497 circuit packs only)—Verifies the seizure capabilities of the circuit pack. This test seizes the trunk and outpulses a "pause." The port reports the result of the seizure attempt uplink. The test can be disabled via Trunk Group Administration.

4. EPF, M, and E Lead Test ABORTS on trunk ports administered as access endpoints. This test consists of two parts:
   - E lead test—Checks for the proper activation and deactivation of the port's E lead.
   - M lead test—Checks the M lead EPF current flow. The results of this test allow for distinguishing between circuit pack and external facility failures.
5. Port Audit Update Test (Audit & Update Test for the TN497 circuit pack)—Sends non-disruptive administrative updates to the circuit pack with no expected response. The test updates the translation information on individual ports of the Tie Trunk. Except for the TN497 circuit pack, these updates include:
   - Immediate, automatic, wink start, or delay dial; for the TN2140B ,continuous-seize-ack
   - For the TN2140B, continuous or discontinuous.
   - Rotary or DTMF senderization in or out
   - Disconnect timing
   - DMTF time slot

Additional in-line testing is performed while a call is in progress. Thus, many in-line errors may occur during operation. See the Error Log table for a description of these errors. These errors may be reproduced by using the trunk (making a call), and checking their occurrence in the Hardware Error Log.

Before a maintenance test can be run on a port, the port is required to be idle. Except for a TN497 circuit pack, if an incoming call seizes the port which is being tested by maintenance, the test is aborted, and the incoming call proceeds.

Non-TN497 circuit packs can be configured for back-to-back testing (also known as connectivity testing) by making translation and cross-connect changes. This testing configuration allows for the connection of Tie Trunks back-to-back in the same switch to verify the operation of Tie Trunk ports. The tests can be performed in either the E&M or simplex modes.

Hardware Error Log Entries and Test to Clear Values

Table 3-331. TIE Trunk Error Log Entries

Error Type	Aux Data	Associated Test	Alarm Level	On/Off Board	Test to Clear Value
0[1]	0	Any	Any	Any	test port PCSSpp s r 1
1 (a)[2]	16384[2]	None[2]	WARNING[2]	OFF[2]	
1 (b)[2]	57476[2]	None[2]	WARNING[2]	OFF[2]	
1 (c)[2]	57477[2]	None[2]	WARNING[2]	OFF[2]	
1 (d)	57483	None[3]	WARNING	OFF	
1 (e)[2]	57485[2]	None[2]	WARNING[2]	OFF[2]	
15 (f)	Any	Port Audit Update (#36); Audit and Update (#36)			
18 (g)	0	busyout trunk <grp/mbr>	WARNING	OFF	release trunk <grp/mbr>
130 (h)[2]		None[2]	WARNING	ON	test trunk <grp>/<mbr>
257 (i)	57473	None	WARNING	OFF	
257 (j)	57474	None	WARNING	OFF	
257 (k)	57475	None	WARNING	OFF	
513	Any	EPF M and E Lead (#74)	MAJ/MIN/ WRN[1]	OFF	test port PCSSpp sh r 3
769	57481	EPF M and E Lead (#74)	MAJ/MIN/ WRN[1]	ON	test port PCSSpp sh r 3
1025 (l)	Any[2] 57392[3]	None	MAJ/MIN/ WRN[1,2] MINOR[3]	OFF	
1281	Any	EPF M and E Lead (#74)	MAJ/MIN/ WRN[1]	ON	test port PCSSpp sh r 3
1537		Loop Around and Conference (#33)	MAJ/MIN/ WRN[1], MINOR	ON	test port PCSSpp l r 3
1793		Tie Trunk Seizure (#73); Seizure (#73)[3]; Tie Trunk Dial (#747)	MAJ/MIN/ WRN; MINOR	OFF	test port PCSSpp sh r 2; test port PCSSpp s r 2
2049		NPE Crosstalk (#6)	MAJ/MIN/ WRN[1], MINOR	ON	test port PCSSpp l r 3[2]

Continued on next page

Table 3-331. TIE Trunk Error Log Entries — *Continued*

Error Type	Aux Data	Associated Test	Alarm Level	On/Off Board	Test to Clear Value
2305 (m)	50944	None; Seizure (#73)[3]; Tie Trunk Dial (#747)			
2305 (m)	57424	Tie Trunk Dial (#747)			
2561[3]	0[3]	None[3]v	WARNING[3]	OFF[3]	
2817[3]	0[3]	None[3]	MINOR[3]	OFF[3]	
3073[3]	0[3]	None[3]			
3840 (n)	8000	Analog Transmission (#844-848)		OFF	
3841 (n)		Analog Transmission (#844-848)	MINOR	OFF	test analog testcall PCSS pp r 2

1. Minor alarms on this MO may be downgraded to Warning alarms based on the values used in the **set options** command. If the MINOR alarm is not downgraded by the **set options** values, the MINOR alarm is upgraded to a MAJOR alarm if 75 percent of the trunks in this trunk group are alarmed.
2. Non-TN497 circuit packs only.
3. TN497 circuit packs only.

Notes:

a. Digit time-out. This occurs when the far-end PBX begins transmitting digits too late (10 seconds) after receiving the signal indicating ready to receive digits (if any). This can occur on an incoming immediate, wink, or delay dial line. Check the far-end PBX to ensure a translation match at both ends.

b. Rotary dial before wink. This occurs when the far-end PBX starts dialing before the PBX sends the wink on a wink-start or (for non-TN439 circuit packs) on a delay-dial line. Check the far-end PBX to ensure a translation match at both ends.

c. Rotary dial too early. This occurs when the far-end PBX starts dialing too soon (about 50ms) after seizure on a wink start or (for non-TN439 circuit packs) on a delay-dial line. Check the far-end PBX to ensure a translation match at both ends.

d. On hook before wink. This occurs when the far end goes on hook before a wink. Check the far-end PBX to ensure a translation match at both ends.

e. On an outgoing wink-start or delay-dial trunk, the wink time was too short (less than 80ms) for a valid signal. Check the far-end PBX to ensure a translation match at both ends.

f. This is a software audit error that does not indicate any hardware malfunction. Run the Short Test Sequence and investigate associated errors (if any).

g. This indicates that the trunk in question has been busied-out by maintenance personnel.

h. This indicates that the circuit pack has been removed or has been insane for more than 11 minutes. To clear the error, reinsert or replace the circuit pack.

i. The rotary dial rate was too slow (less than eight pulses per second.) Check the far-end PBX to ensure a translation match at both ends.

j. The rotary dial rate was too fast (more than 12 pulses per second.) Check the far-end PBX to ensure a translation match at both ends.

k. The time between digits was too short (less than 300ms). Check the far-end PBX to ensure a translation match at both ends.

l. This indicates that the trunk is still seized with an incoming call. The far-end PBX is not releasing the trunk after the call is dropped. A Minor alarm is generated every four minutes until the far-end PBX releases the trunk. Check the far-end PBX for problems.

   Once the trunk is released from the call, the severity of this problem is decreased. If Error Type 1025 does not appear again, this means that the problem has been corrected. Verify that Error Type 1025 does not reappear in the Error Log.

m. Reorder message. Trunk could not be seized. This error causes the Tie Trunk Seizure Test (#73) to run, and it is considered a problem only if the Seizure Test fails (in which case Error Type 1793 also shows up). In this case, the trunk may be placed in the "Ready-for-Service" state (shown as "disconnected" by the status command), which allows only incoming calls. Run the Tie Trunk Seizure Test and follow its outlined procedures.

n. Test calls made by the Automatic Transmission Measurement System (ATMS) returned measurements that were outside the acceptable limits. Use the **list testcall detail** command to examine specific transmission parameters that are out of spec, and investigate the trunk for that kind of noise. If the noise is acceptable, the limits administered on the "change trunk" screen should be changed.

System Technician-Demanded Tests: Descriptions and Error Codes

Always investigate tests in the order presented in the table below when inspecting errors in the system. By clearing error codes associated with the *Loop Around and Conference Circuit Test,* for example, you may also clear errors generated from other tests in the testing sequence.

Order of Investigation	Short Test Sequence	Long Test Sequence	D/ND[1]
NPE Crosstalk Test (#6)		X	ND
Loop Around and Conference Circuit Test (#33)		X	ND
Tie Trunk Seizure Test (#73)[2], Tie Trunk Dial Test (#747)[3], Seizure Test (#73)[4]	X	X	ND
Tie Trunk EPF Test (#74)[5]	X	X	ND
Port Audit and Update Test (#36)[6], Audit and Update Test (#36)[4]	X	X	ND
Analog Transmission Test (#844-848)	(a)	(a)	

1. D = Destructive; ND = Nondestructive
2. Non-TN439 and non-TN497 circuit packs only
3. TN439 circuit pack only
4. TN497 circuit pack only
5. G3iV1.1-286 and G3iV2-386 only
6. Non-TN497 circuit packs only

Notes:

a. ATMS test are not part of either sequence. They are run either on demand with the **test analog-testcall** command or via the ATMS schedule.

NPE Crosstalk Test (#6)

One or more NPE reside on each circuit pack with a TDM Bus interface. The NPE controls port connectivity and gain, and provides conferencing functions on a per port basis. The NPE Crosstalk Test verifies that this port's NPE channel talks on the selected time slot and never crosses over to time slots reserved for other connections. If the NPE is not working correctly, one-way and noisy connections may be observed. This test is usually only part of a port's Long Test Sequence and takes 20 to 30 seconds to complete.

Table 3-332. TEST #6 NPE Crosstalk Test

Error Code	Test Result	Description/ Recommendation
	ABORT	Could not allocate the necessary system resources to run this test. 1. Retry the command at 1-minute intervals a maximum of 5 times.
1000	ABORT	System resources required to run this test are not available. The trunk may be busy with a valid call. Use the **display trunk xx** command to determine the trunk group/member number of the port. Use the **status trunk** command to determine the service state of the port. If the service state indicates that the port is in use, the port is unavailable for certain tests. You must wait until the port is idle before retesting. 1. If the port status is active, but the port is not in use (no connected ports), check the Error Log for Error Type 1025 (see Error Log table for description of this error and required actions). The port may be locked up. 2. If the port status is idle, retry the command at 1-minute intervals a maximum of 5 times.
1001	ABORT	System resources required to run this test are not available. This could be due to a failure to seize the port. 1. Retry the command at 1-minute intervals a maximum of 5 times.
1002	ABORT	The system could not allocate time slots for the test. The system may be under heavy traffic conditions or it may have time slots out-of-service due to TDM-BUS errors. Refer to TDM-BUS Maintenance to diagnose any active TDM-BUS errors. 1. If the system has no TDM-BUS errors and is not handling heavy traffic, repeat test at 1-minute intervals a maximum of 5 times.
1003	ABORT	The system could not allocate a tone receiver for the test. The system may be oversized for the number of Tone Detectors present or some Tone Detectors may be out-of-service. 1. Look for TTR-LEV errors in the Error Log. If present, refer to TTR-LEV Maintenance documentation. 2. Look for TONE-PT errors in the Error Log. If present, refer to TONE-PT Maintenance documentation. 3. If neither condition exists, retry the test at 1-minute intervals a maximum of 5 times.
1004	ABORT	(Non-TN497 circuit packs only) The port was seized by a valid call during the test. The test has been aborted. Use the **display trunk xx** command to determine the trunk group/member number of the port. Use the **status trunk** command to determine the service state of the port. If the service state indicates that the port is in use, the port is unavailable for certain tests. You must wait until the port is idle before retesting.

Continued on next page

Table 3-332. TEST #6 NPE Crosstalk Test — *Continued*

Error Code	Test Result	Description/ Recommendation
2000	ABORT	Response to the test request was not received within the allowable time period.
2100	ABORT	Could not allocate the necessary system resources to run this test. This could be due to a failure to seize the port. 1. Retry the command at 1-minute intervals a maximum of 5 times.
Any	FAIL	This test can fail due to on-board or off-board problems. Off-board problems of concern include TDM-BUS faults and faults associated with the tone detectors/tone generators. Clear all off-board problems before replacing the board. Keep in mind that a TDM-BUS problem is usually the result of a faulty board connected to the backplane or bent pins on the backplane. 1. Look for TDM-BUS errors in the error log. If present, refer to the TDM-BUS Maintenance documentation. 2. Look for TONE-BD and/or TONE-PT errors in the error log. If present, refer to the TONE-BD Maintenance documentation and the TONE-PT Maintenance documentation. 3. Test the board when the faults from steps 1 and 2 are cleared. Replace the board only if the test fails.
	PASS	The port is correctly using its allocated time slots. User-reported troubles on this port should be investigated using other port tests and examining station, trunk or external wiring.
0	NO BOARD	The test could not relate the internal ID to the port (no board). 1. Check to ensure that the board translations are correct. Translate the board, if necessary. 2. Issue the **busyout board** command. 3. Issue the **reset board** command. 4. Issue the **release busy board** command. 5. Issue the **test board** command. This should re-establish the linkage between the internal ID and the port.

Loop Around and Conference Circuit Test (#33)

This test checks the reflective loop around, and conference capabilities of a tie trunk port circuit. The test uses 404-Hz, 1004-Hz, and 2804-Hz tones. This is an on-board test only, and each tone is transmitted through the loop and checked upon return.

This test may fail due to noise induced by adjacent electric power lines. Customers having this problem should resolve it with their local power company. To temporarily alleviate the alarm caused by the failure of this test, the test may be disabled from the trunk administration Test field.

Table 3-333. TEST #33 Loop Around and Conference Circuit Test

Error Code	Test Result	Description/ Recommendation
	ABORT	Could not allocate the necessary system resources to run this test. This could be due to a failure to seize the port. 1. Retry the command at 1-minute intervals a maximum of 5 times.
7	ABORT	The conference circuit test was aborted. 1. Retry the command at 1-minute intervals a maximum of 5 times.
129	ABORT	The 404-Hz reflective loop around test aborted. Response to the test request was not received within the allowable time period.
131		The 1004-Hz reflective loop around test aborted. Response to the test request was not received within the allowable time period.
133		The 2804-Hz reflective loop around test aborted. Response to the test request was not received within the allowable time period. 1. Retry the command at 1-minute intervals for a maximum of 5 times.
1000	ABORT	System resources required to run this test are not available. The trunk may be busy with a valid call. Use the **display trunk xx** command to determine the trunk group/member number of the port. Use the **status trunk** command to determine the service state of the port. If the service state indicates that the port is in use, the port is unavailable for certain tests. You must wait until the port is idle before retesting. 1. If the port status is active, but the port is not in use (no calls), check the Error Log for Error Type 1025 (see Error Log table for a description of this error and required actions). The port may be locked up. 2. If the port status is idle, retry the command at 1-minute intervals a maximum of 5 times.
1002	ABORT	The system could not allocate time slots for the test. The system may be under heavy traffic conditions or it may have time slots out-of-service due to TDM-BUS errors. Refer to TDM-BUS Maintenance to diagnose any active TDM-BUS errors. 1. If system has no TDM-BUS errors and is not handling heavy traffic, repeat test at 1-minute intervals a maximum of 5 times.

Continued on next page

Table 3-333. TEST #33 Loop Around and Conference Circuit Test — *Continued*

Error Code	Test Result	Description/ Recommendation
1003	ABORT	The system could not allocate a tone receiver for the test. The system may be oversized for the number of Tone Detectors present, or some Tone Detectors may be out-of-service. 1. Look for TTR-LEV errors in the Error Log. If present, refer to TTR-LEV Maintenance documentation. 2. Look for TONE-PT errors in the Error Log. If present, refer to TONE-PT Maintenance documentation. 3. If neither condition exists, retry the command at 1-minute intervals a maximum of 5 times.
1004	ABORT	(Non-TN497 circuit packs only.) The port was seized by a valid call during the test. The test has been aborted. Use the **display trunk xx** command to determine the trunk group/member number of the port. Use the **status trunk** command to determine the service state of the port. If the service state indicates that the port is in use, the port is unavailable for certain tests. You must wait until the port is idle before retesting.
1018	ABORT	The test has been disabled via administration. Verify that the 'Maintenance Test' field on the 'Trunk Group' form is set to 'n'. To enable the test, issue the **change trunk-group x** command (x equals the number of the trunk group to be tested). Then, change the entry in the `Maintenance Test` field on the form to **y**.
2000	ABORT	Response to the test request was not received within the allowable time period.
2100	ABORT	Could not allocate the necessary system resources to run this test. This could be due to a failure to seize the port. 1. Retry the command at 1-minute intervals a maximum of 5 times.

Continued on next page

Table 3-333. TEST #33 Loop Around and Conference Circuit Test — *Continued*

Error Code	Test Result	Description/ Recommendation
7, 129, 131, or 133	FAIL	The conference capabilities of the port failed (Error Code 7). The reflective 404-Hz Tone Test failed. No transmission was detected to or from the port (Error Code 129). The reflective 1004-Hz Tone Test failed. No transmission was detected to or from the port (Error Code 131). The reflective 2804-Hz Tone Test failed. No transmission was detected to or from the port (Error Code 133). FAULT ISOLATION: Proceed as follows unless power or tone problems are suspected (see notes on the next page). 1. To make sure the problem is on-board, disconnect the port from the CO and retry the test. Coordinate this with the CO, or do it after busy hours; otherwise, the CO may put the connection out of service. 2. If the retry fails, replace the circuit pack. 3. If the retry passes and no troubles have been reported, disable the test. If the retry passes and troubles have been reported, refer the problem to the CO. **NOTE:** If the loop around and conference circuit test fails for all ports on a circuit pack, a -5 volt power problem is indicated. If the test fails on more than 1 port, check for errors on the TONE-BD or the TONE-PT. If errors, take appropriate actions. When the tone errors are cleared, rerun the test. If the test fails again, see FAULT ISOLATION above.
	PASS	Tie trunk Loop Around and Conference Test is successful. This port is functioning properly. 1. If users are reporting troubles, examine loop connections to the port.
0	NO BOARD	The test could not relate the internal ID to the port (no board). 1. Check to ensure that the board translations are correct. Translate the board, if necessary. 2. Issue the **busyout board** command. 3. Issue the **reset board** command. 4. Issue the **release busy board** command. 5. Issue the **test board** command. This should re-establish the linkage between the internal ID and the port.

Audit Update Test (#36)

This test sends updates of the Tie Trunk port translation for all ports on the circuit pack that have been translated. The update is non-disruptive and guards against possible corruption of translation data contained on the board. No response message is expected from the circuit pack once it receives translation updates. The port translation data for non-TN497 circuit packs includes the following: Immediate, automatic, wink-start or delay dial trunk, rotary or DTMF senderization in or out, disconnect timing from 10 to 2550ms in 10ms increments, and DMTF time slot. (Continuous-seize-ack is also included for the TN2140B circuit pack.)

Table 3-334. TEST #36 Audit Update Test

Error Code	Test Result	Description/ Recommendation
	ABORT	Could not allocate the necessary system resources to run this test. 1. Retry the command at 1-minute intervals a maximum of 5 times.
1006	ABORT	(TN497 circuit pack only.) The port is in the out-of-service state. The test cannot be run. 1. Retry the command once the port is in service.
2100	ABORT	Could not allocate the necessary system resources to run the test. This could be due to a failure to seize the port. 1. Retry the command at 1-minute intervals a maximum of 5 times.
	FAIL	Internal System Error. 1. Retry the command at 1-minute intervals a maximum of 5 times.
	PASS	This test passed. Translation information was successfully updated on the circuit pack. 1. If signaling troubles are reported, verify translation information for this port. (Non-TN497 circuit packs only.) If the trunk is busied out, the test does not run, but it does return PASS. To verify that the trunk is in-service: 1. Enter **status trunk** command to verify that the trunk is in-service. If the trunk is in-service, no further action is necessary. If the trunk is out-of-service, continue to Step 2. 2. Enter **release trunk** command to put trunk back into in-service. 3. Retry the test command.

Continued on next page

Table 3-334. TEST #36 Audit Update Test — *Continued*

Error Code	Test Result	Description/ Recommendation
0	NO BOARD	The test could not relate the internal ID to the port (no board). 1. Check to ensure that the board translations are correct. Translate the board, if necessary. 2. Issue the **busyout board** command. 3. Issue the **reset board** command. 4. Issue the **release busy board** command. 5. Issue the **test board** command. This should re-establish the linkage between the internal ID and the port.

Tie Trunk Seizure Test (#73), Tie Trunk Dial Test (#747). Seizure Test(#73)

The Tie Trunk Seizure Test activates the M lead and checks for a response from the external end within 10 seconds. This test is applicable only to wink start and delay dial outgoing trunks. (For the TN2140B circuit pack, the trunk must also be continuous-seize-ack and discontinuous-seize-ack).

The Tie Trunk Dial Test seizes the trunk and outpulses a pause digit.

For a port administered as TGU or a TGE, the Seizure Test internally seizes the trunk and outpulses a "pause." The report reports the result of the seizure attempt uplink.

Table 3-335. Seizure Tests (#73, #747, #73)

Error Code	Test Result	Description/ Recommendation
	ABORT	Could not allocate the necessary system resources to run this test. 1. Retry the command at 1-minute intervals a maximum of 5 times.

Continued on next page

Table 3-335. Seizure Tests (#73, #747, #73) — *Continued*

Error Code	Test Result	Description/ Recommendation
1000	ABORT	System resources required to run this test are not available. The trunk may be busy with a valid call. Use the **display trunk xx** to determine the trunk group/member number of the port. Use the **status trunk** command to determine the service state of the port. If the service state indicates that the port is in use, then the port is unavailable for certain tests. You must wait until the port is idle before retesting. 1. If the port status is active, but the port is not in use (no calls), then check the Error Log for Error Type 1025 (see Error Log table for description of this error and required actions). The port may be locked up. The far-end PBX may not be releasing. 2. If the port status is idle, then retry the command at 1-minute intervals a maximum of 5 times.
1004	ABORT	(Non-TN497 circuit packs only.) The port was seized by a valid call during the test. The test has been aborted. Use the **display trunk xx** to determine the trunk group/member number of the port. Use the **status trunk** command to determine the service state of the port. If the service state indicates that the port is in use, the port is unavailable for certain tests. You must wait until the port is idle before retesting. 1. Retry the command at 1-minute intervals a maximum of 5 times.
1005	ABORT	This test is not valid for this trunk translation. For this test to run, a delay dial trunk (or, for non-TN497 circuit packs, a wink-start trunk) must be in effect, and the trunk must be outgoing or two-way. Also, for the TN2140B, the trunk must be continuous-seize-ack or discontinuous-seize-ack. 1. Check trunk translation. If it is not a wink-start or delay dial trunk, this abort message should be ignored. (For the TN2140B, disregard this abort on a trunk that is not continuous-seize-ack or discontinuous-seize-ack.)
1018	ABORT	Test disabled via administration. 1. Verify that the `Maintenance Tests?` field on the Trunk Group Form is set to **n**. To enable the test, issue the **change trunk-group x** command where "x" equals the number of the trunk group to be tested. Then change the entry in the `Maintenance Tests?` field on the form to **y**.
1040	ABORT	(Non-TN497 circuit packs only.) This test is not performed for trunk ports administered as access endpoints. 1. Verify this port is an access endpoint by using the **display port** command. 2. If the port has been administered as an access endpoint, this test should abort.

Continued on next page

Table 3-335. Seizure Tests (#73, #747, #73) — *Continued*

Error Code	Test Result	Description/ Recommendation
2000	ABORT	Seizure message is not received back within 10 seconds. 1. Retry the command at 1-minute intervals a maximum of 5 times. 2. If the test continues to fail, check the far-end PBX to ensure a translation match at both ends. 3. Check the facility.
2100	ABORT	Could not allocate the necessary system resources to run the test. This could be due to a failure to seize the port. 1. Retry the command at 1-minute intervals a maximum of 5 times.
3	FAIL	(TN439 circuit packs only.) No dial tone detected from the other end. 1. Retry the command at 1-minute intervals a maximum of 5 times. 2. If the test continues to fail, check the far-end PBX to ensure a translation match at both ends. 3. Check the facility.
	PASS	The relevant seizure test passes. This port is functioning properly. 1. If users are reporting troubles, examine loop connections to the port, wiring, and stations.
0	NO BOARD	The test could not relate the internal ID to the port (no board). 1. Check to ensure that the board translations are correct. Translate the board, if necessary. 2. Issue the **busyout board** command. 3. Issue the **reset board** command. 4. Issue the **release busy board** command. 5. Issue the **test board** command. This should re-establish the linkage between the internal ID and the port.

Tie Trunk EPF Test (#74)

This test consists of an E lead and M lead test. The E lead test checks for the proper activation and deactivation of the port's E lead. The M lead test checks the M lead EPF current flow. The processor sends an M lead test request to the circuit pack and receives the results. The returned results are measured to see if a port or external tie trunk line fails.

Table 3-336. TEST #74 Tie Trunk EPF Test

Error Code	Test Result	Description/ Recommendation
	ABORT	Could not allocate the necessary system resources to run the test. This could be due to a failure to seize the port. 1. Retry the command at 1-minute intervals a maximum of 5 times.
1	ABORT	Internal System Error. 1. Retry the command at 1-minute intervals a maximum of 5 times.
1000	ABORT	System resources required to run this test are not available. The trunk may be busy with a valid call. Use the **display trunk xx** to determine trunk group/member number of the port. Use the **status trunk** command to determine the service state of the port. If the service state indicates that the port is in use, then the port is unavailable for certain tests. You must wait until the port is idle before retesting. 1. If the port status is active, but the port is not in use (no calls), then check the Error Log for Error Type 1025 (see Error Log table for description of this error and required actions). The port may be locked up. The far-end PBX may not be releasing. 2. If the port status is idle, then retry the command at 1-minute intervals a maximum of 5 times.
1004	ABORT	The port was seized by a valid call during the test. The test has been aborted. Use the **display trunk xx** to determine the trunk group/member number of the port. Use the **status trunk** command to determine the service state of the port. If the service state indicates that the port is in use, the port is unavailable for certain tests. You must wait until the port is idle before retesting. 1. Retry the command at 1-minute intervals a maximum of 5 times.
1005	ABORT	This test is not valid for this trunk translation. Must be a Type-1 standard trunk for this test to run. 1. Check trunk configuration. If it is not a Type-1 standard trunk, this abort message should be ignored.
1014	ABORT	The test was aborted because the circuit pack has not been inserted into the system. 1. Use the **list configuration board** command to make sure the circuit pack is inserted in the carrier. 2. If the board is not inserted, make sure the circuit pack is inserted in the carrier and fully seated.

Continued on next page

Table 3-336. TEST #74 Tie Trunk EPF Test — *Continued*

Error Code	Test Result	Description/ Recommendation
1040	ABORT	This test is not performed for trunk ports administered as "access endpoints." 1. Verify this port is an access endpoint by using the **display port** command. 2. If the port has been administered as an access endpoint, this test should abort.
2000	ABORT	Response to the test request was not received within the allowable time period.
2100	ABORT	Could not allocate the necessary system resources to run the test. This could be due to a failure to seize the port. 1. Retry the command at 1-minute intervals a maximum of 5 times.
1	FAIL	The E lead test failed due to an on-board port problem. 1. Replace the circuit pack.
2	FAIL	The M lead test failed. The EPF has experienced an overcurrent condition, perhaps due to the external M lead. 1. To make sure the problem is on-board, disconnect the facility from the pack and retry the test. 2. If the test fails, replace the circuit pack. Otherwise, check the external wiring toward the far-end PBX.
	PASS	Tie Trunk EPF test is successful. This port is functioning properly. 1. If users are reporting troubles, examine loop connections to the port.
0	NO BOARD	The test could not relate the internal ID to the port (no board). 1. Check to ensure that the board translations are correct. Translate the board, if necessary. 2. Issue the **busyout board** command. 3. Issue the **reset board** command. 4. Issue the **release busy board** command. 5. Issue the **test board** command. This should re-establish the linkage between the internal ID and the port.

Transmission Test (#844-848)

This test is non-destructive.

NOTE:
Tests #844-848 are not supported on an International switch.

These tests are run by the Automatic Transmission Measurement System (ATMS). They are not part of the long or short trunk test sequences. Instead, they are run on demand with the **test analog-testcall** command or as part of ATMS scheduled testing.

The test call is run from an analog port on a TN798 Processor circuit pack. It attempts to seize a port and make a call to a terminating test line (TTL) on the trunk's far end. Transmission performance measurements are made and compared to administered thresholds. Errors are generated when results fall outside of ''marginal'' or ''unacceptable'' thresholds. Detail and summary measurement reports are obtainable via the **list testcalls** command.

Table 3-337. TEST #844-848 Transmission Test

Error Code	Test Result	Description/ Recommendation
1000	ABORT	System resources required to run this test are not available. The port may be busy with a valid call. Use **display port PCSSpp** to determine the trunk group/member number of the port. Use the **status trunk** command to determine the service state of the port. If the service state indicates that the port is in use, then the port unavailable for this test. You must wait until the port is idle before retesting. 1. If the port status is idle, then retry the command at 1-minute intervals for a maximum of 5 retries.
1001	ABORT	Could not allocate the necessary system resources to run this test. 1. Retry the command at 1-minute intervals for a maximum of 5 retries.
1002	ABORT	The system could not allocate timeslots for the test. The system may be under heavy traffic conditions or it may have timeslots out of service due to TDM bus errors. Refer to TDM Bus Maintenance to diagnose any active TDM bus errors. 1. If system has no TDM bus errors and is not handling heavy traffic, repeat test at 1-minute intervals for a maximum of 5 retries.
1004	ABORT	The port has been seized by a user for a valid call. Use status trunk to determine when the port is available for testing. 1. Retry the command at 1-minute intervals for a maximum of 5 retries.
1005	ABORT	Trunk has been administered as incoming-only; transmission tests can only be run on outgoing trunks.

Continued on next page

Table 3-337. TEST #844-848 Transmission Test — *Continued*

Error Code	Test Result	Description/ Recommendation
1115	ABORT	The near end test line on the circuit pack could not be allocated. 1. Verify that the circuit pack is in service and that port 1 is administered and in service with the **status port** command. 2. retry the command at 1-minute intervals for a maximum of 5 retries.
1900	ABORT	The test completion message was not received from the circuit pack. 1. Test the TN798 circuit packs.
1901	ABORT	This error occurs when the TN798 circuit pack uplinks a message that is not the proper response for this test. The anticipated uplink messages are seize, ring or answer. 1. Verify that the Trunk is administered properly.
1905	ABORT	Intercept tone detected from far end. 1. Get the test line data from theand verify it with the far end. Dial the test number manually to see if the TTL is reached. If it is not, then either the number is wrong, or the far end is administered incorrectly.
1906	ABORT	Reorder tone detected from far end. 1. See actions for error code 1905.
1907	ABORT	Other unexpected tone detected from far end. 1. See actions for error code 1905.
1913	ABORT	Audible Ring detected from far end. 1. See actions for error code 1905.
1914	ABORT	Unidentified interrupted tone detected from far end. 1. See actions for error code 1905
1915	ABORT	Busy tone detected from far end. 1. Since the test line at the far end was busy. Try the test again. 2. If the test continues to abort, the problem is with the far end system.
1918	ABORT	Test progress tone not removed from far end (type 105 test line only). 1. The problem is with the far end system; a technician at the far end should test the test line (TN798).
1919	ABORT	Unexpected far end release 1. The problem is with the far end system; a technician at the far end should test the test line (TN798).

Continued on next page

Table 3-337. TEST #844-848 Transmission Test — *Continued*

Error Code	Test Result	Description/ Recommendation
1920	ABORT	No response from far end. 1. The problem is with the far end system; a technician at the far end should test the test line (TN798).
1921	ABORT	No data returned from far end. 1. The problem is with the far end system; a technician at the far end should test the test line (TN798).
1922	ABORT	Steady, unidentifiable tone from far end 1. See actions for error code 1905.
1923	ABORT	Broadband energy detected from far end (such as voice or announcement). 1. See actions for error code 1905.
1924	ABORT	No test tone from far end 1. See actions for error code 1905.
1938	ABORT	Near-end self test failed. 1. Test the TN798 circuit pack.
1939	ABORT	Loss self check at 0dBm at 1004 Hz failed. 1. Test the TN798 circuit packs.
1940	ABORT	Far end noise self check failed. 1. The problem is with the far end system; a technician at the far end should test the test line (TN798).
1941	ABORT	High frequency singing return loss self check failed. 1. Test the TN798 circuit pack.
1942	ABORT	Echo return loss self check failed. 1. Test the TN798 circuit pack.
1943	ABORT	Singing return loss self check failed. 1. Test the TN798 circuit pack.
1944	ABORT	Loss self check at -16 dBm at 1004 Hz failed. 1. Test the TN798 circuit pack.
1945	ABORT	Loss self check at -16 dBm at 404 Hz failed. 1. Test the TN798 circuit pack.
1946	ABORT	Loss self check at -16 dBm at 2804 Hz failed. 1. Test the TN798 circuit pack.

Continued on next page

Table 3-337. TEST #844-848 Transmission Test — *Continued*

Error Code	Test Result	Description/ Recommendation
1947	ABORT	Noise with tone self check failed. 1. Test the TN798 circuit pack.
2000	ABORT	The test timed out while waiting for a response from the TN798 circuit pack. 1. Retry the command at 1-minute intervals for a maximum of 5 retries.
2012	ABORT	An internal software error occurred. 1. Retry the command at 1-minute intervals for a maximum of 5 retries.
2053	ABORT	The test call could not be established, but no information on why is available. 1. Retry the command at 1-minute intervals for a maximum of 5 retries.
2056	ABORT	An error occurred while trying to obtain results from the TN771 circuit pack. 1. Test the TN798 circuit pack.
	FAIL	Measured transmission performance was in the unacceptable range as administered on the trunk group form. Retrieve a measurement report via the **list testcalls** command. Make sure that ATMS thresholds are set properly on page 4 of the Trunk Group form. Besides the facility, test failures can be caused by faulty test lines or switch paths. If the measurements point to a facility problem, report the results to the trunk vendor.
8000	FAIL	Measured transmission performance was in the marginal range as administered on the trunk group form. This generally means that the trunk is usable but has an undesirable amount of noise or loss. If the user does not report unacceptable effects, it may not be necessary to take any action. Retrieve a measurement report via the **list testcalls** command. Make sure that ATMS thresholds are set properly on page 4 of the Trunk Group form.

TONE-BD (Tone-Clock Circuit Pack)

MO Name (in Alarm Log)	Alarm Level	Initial Command to Run[1]	Full Name of MO
	MAJOR	test tone-clock PC	Tone-Clock Circuit Pack
TONE-BD	MINOR	test tone-clock PC	Tone-Clock Circuit Pack
TONE-BD	WARNING	release tone-clock PC	Tone-Clock Circuit Pack

1. P is the port network number (1). C is the carrier designation (A, B, or C).

The Tone-Clock circuit pack functionality is provided by two independent objects in the same circuit pack. The tone generator provides all the tones needed by the system and the clock generates the system clocks for the Time Division Multiplex (TDM) Bus and aids in monitoring and selecting internal synchronization references.

When resolving errors/alarms on the Tone-Clock circuit pack, the following should be used also:

- TONE-PT (Tone Generator) Maintenance documentation.
- TDM-CLK (TDM Bus Clock) Maintenance documentation.
- SYNC (Synchronization) Maintenance documentation.

The TN2182 is a combined Tone-Clock/Detector circuit pack that contains 8 ports used for all-purpose tone detection. These ports are called Enhanced Tone Receiver ports (ETR-PT) and are described in the documentation for ETR-PT.

Tone-Clock Circuit Packs

CMC systems have one Tone-Clock circuit pack in each port network. This is in the A carrier. This Tone-Clock circuit pack generates clocks and provides system tones for all carriers of the port network it resides on.

Italian Tone Settings (New ISPT Value)

Tone	Default	Old ISPT Value
Dial	Continuous	Cadenced
Confirmation	Cadenced	Continuous

The TN2182 allows International changes, but allows the customization of up to 24 system tones in order to meet specific country needs. These changes are made via the **change system-parameters country-options** form.

How to Replace a Tone-Clock Circuit Pack

Replacing the Tone-Clock circuit pack is a service-disrupting procedure on Port Networks, because the Tone-Clock circuit pack is always needed to generate clocks for its network. When the circuit pack is removed, all calls are dropped immediately. However, if the Tone-Clock is removed for replacement, the System Emergency Transfer feature is activated within milliseconds, and the entire system is disrupted; no calls can be placed, and existing calls are dropped.

When replacing the Tone-Clock circuit pack, always replace it with a TN2182 Tone-Clock circuit pack. The TN2182 may be used in all country configurations.

Port Networks with a Single Tone-Clock Circuit Pack

This procedure is destructive.

1. Pull out the defective Tone-Clock circuit pack. This will remove the clocks and cause the system to activate emergency measures:
   - The system will immediately go into the Emergency Transfer state.
2. Insert a new Tone-Clock circuit pack. The system will detect the return of the clocks and will automatically recover as follows:
   - The system will perform a **reset system 2 (system cold 2 restart)** automatically. First, all red LEDs of the PPN will come on and off within 30 seconds.
3. If the red LEDs come on but do not go off within 30 seconds, pull the circuit pack out and reseat it. If the LEDs perform as expected this time, continue with step 4. Otherwise, there may be a problem with the TDM bus; possibly a bent pin in the Tone-Clock circuit pack slot. Follow the directions in the TDM-BUS maintenance section.
4. If the red LEDs did light, as explained above, then go to Step 6. If the red LEDs do NOT light, as explained above, then go on to Step 5.
5. Restart the affected Port Network:
   - Restart the system via the **reset system 2** command.

6. Test the new Tone-Clock circuit pack to verify that it is functioning properly, using the **test tone-clock PC long** command, and verify that the system is operational by placing several phone calls. Where possible, try calls into, out from, and within the affected Port Network.

Hardware Error Log Entries and Test to Clear Values

Table 3-338. Tone-Clock Circuit Pack Error Log Entries

Error Type	Aux Data	Associated Test	Alarm Level	On/Off Board	Test to Clear Value
0[1]	0	Any	Any	Any	test tone-clock PC sh
1(a)	0	Circuit pack removed or SAKI Sanity Test (#53)	MINOR	ON	
18(b)	0	busyout tone-clock PC	WARNING	OFF	release tone-clock PC
23(c)	0	None	WARNING	OFF	
125(d)		None	MINOR	ON	
126(e)		None	MINOR	ON	
257	65535	Control Channel Test (#52)	MINOR	ON	test tone-clock PC r 20
257(f)	Any	None			
513(g)	Any	None			
769(h)	4358	None			
1025(i)	4363	NPE Audit Test (50)			test tone-clock PC sh
1538(j)	Any	None	MINOR	ON	
2049(k)	0	Clock Health Inquiry Test (#46)	MAJOR	ON	set tone-clock PC override
2305(k)	0	Clock Health Inquiry Test (#46)	MAJOR	ON	set tone-clock PC override
2561(l)	Any	None	MAJOR	ON	
3329(m)	0	None	MINOR/ WARNING[2]	OFF	set tone-clock PC
3840(n)	Any	None			
3848(o)	0	Clock Health Inquiry Test (#46)			set tone-clock PC override

Continued on next page

Table 3-338. Tone-Clock Circuit Pack Error Log Entries — *Continued*

Error Type	Aux Data	Associated Test	Alarm Level	On/Off Board	Test to Clear Value
3872(p)	0	None			set tone-clock PC override
3999 (q)	Any	None			

1. Run the Short Test Sequence first. If all tests pass, run the Long Test Sequence. Refer to the appropriate test description and follow the recommended procedures.
2. Minor alarms on this MO may be downgraded to Warning alarms based on the value used in the **set options** command.

Notes:

a. Error Type 1—This error indicates the circuit pack totally stopped functioning or it was physically removed from the system.

NOTE:
The alarm is logged approximately 11 minutes after the circuit pack is removed/SAKI Sanity Test (#53) fails.

If the circuit pack is not present in the system, insert a circuit pack in the slot indicated by the error to resolve the error.

If the circuit pack is present in the system, it is faulty and must be replaced. See the preceding section, "How to Replace a Tone-Clock Circuit Pack".

System Technician-Demanded Tests: Descriptions and Error Codes

Always investigate tests in the order presented in the following tables when inspecting errors in the system. By clearing error codes associated with the *SAKI Sanity Test*, for example, you may also clear errors generated from other tests in the testing sequence.

Use the **list configuration control** command to find the Tone-Clock Circuit Pack Code of the system. Look for the Short and Long Test Sequences according to the Tone-Clock Circuit Pack Code.

Table 3-339. System Technician-Demanded Tests: TONE-BD (TN756 only)

Order of Investigation	Short Test Sequence	Long Test Sequence	D/ND[1]
SAKI Sanity Test (#53) (a)		X	D
Clock Health Inquiry Test (#46)	X	X	ND
Control Channel Loop Around Test (#52) (a)	X	X	ND
Tone Detection Verification Test (#42) (b)	X	X	ND
Tone Detection Audit/Update Test (#43) (b)	X	X	ND
Tone Generator Crosstalk Test (#90) (b)		X	ND
Tone Generator Transmission Test (#40) (b)	X	X	ND
Tone Generator Audit/Update (#41) (b)	X	X	ND

1. D = Destructive, ND = Non-destructive

Notes:

a. Refer to XXX-BD (Common Port Circuit Pack) documentation for descriptions of these tests.

b. Refer to TONE-PT (Tone Generator) documentation for descriptions of these tests.

Table 3-340. System Technician-Demanded Tests: TONE-BD (TN2182 only)

Order of Investigation	Short Test Sequence	Long Test Sequence	D/ND[1]
SAKI Reset Test (#53) (a)		X	
Clock Health Inquiry Test (#46)	X	X	
Control Channel Loop Around Test (#52) (a)	X	X	
Tone Generator Crosstalk Test (#90) (b)		X	
Tone Generator Transmission Test (#40) (b)	X	X	

Continued on next page

Table 3-340. System Technician-Demanded Tests: TONE-BD (TN2182 only) — *Continued*

Order of Investigation	Short Test Sequence	Long Test Sequence	D/ND[1]
Tone Generator Audit/Update (#41) (b)	X	X	
TDM Bus Clock Circuit Status Inquiry Test (#148) (c)	X	X	
TDM Bus Clock Slip Inquiry (#149) (c)	X	X	
TDM Bus Clock PPM Inquiry Test (#150) (c)	X	X	
TDM Bus Clock Parameter Update Test (#151) (c)	X	X	
Board Type Check Test (#574) (c)	X	X	
Standby Reference Health Check Test (#651) (c,)		X	

1. D = Destructive, ND = Non-destructive

Notes:

a. Refer to XXX-BD for descriptions of these tests.

b. Refer to TONE-PT for descriptions of these tests.

c. Refer to TDM-CLK for descriptions of these tests.

Clock Health Inquiry Test (#46)

This inquiry reads special data stored in memory to determine if this Tone-Clock circuit pack had a loss of any of three clock types:

- SYSCLK
- SYSFM
- SYSDCLK

If this data indicates this Tone-Clock circuit pack had a loss of any of these clocks, the inquiry reports FAIL. In addition, if TDM-CLK error 1 is at threshold, this test will FAIL. TDM-CLK error 1 indicates a suspect clock is at the edge of its specified frequency. If the circuit pack did not have a loss of clock or TDM-CLK error 1 at threshold, the inquiry reports PASS.

This is not really a test, in the sense that it simply reports status held by the system, and does not generate new information or raise alarms. If this test fails with no error code, there is at least one Major alarm against a Tone-Clock circuit

pack. If this test fails with an error code of 1, there is at least one Minor off-board alarm against a TDM-CLK.

Table 3-341. TEST #46 Clock Health Inquiry Test

Error Code	Test Result	Description/ Recommendation
	ABORT	Internal System Error. 1. Retry the command at 1-minute intervals for a maximum of 5 times.
none	FAIL	This Tone-Clock circuit pack had an apparent loss of clock. One or more of error types 2049, 2305, 3834, and 3872 will appear in the error log. Correct the problem according to the appropriate error log entries. Once this test fails, the only way to make it pass, and to retire the associated alarm, is to repair the problem and to execute the **set tone-clock PC override** command against the indicated Tone-Clock circuit pack. **NOTE:** If power is removed from a carrier in a duplicated system, and that SPE has the active TONE-CLK, a MAJOR alarm is raised for the TONE-BD. The TONE-BD will be out of service and when running Test 46 (Clock Health Test) it will fail, indicating a loss of any of these three clocks, SYSCLK, SYSFM, and SYSDCLK. To restore the TONE-BD to service you must execute the **set tone spe health-override** command.
1	FAIL	This Tone-Clock circuit pack is suspect of having a clock at the edge of its specified frequency. 1. Replace the Tone-Clock circuit pack identified in the error log. Refer to the "How to Replace a Tone-Clock Circuit Pack" section.
	PASS	This Tone-Clock circuit pack has not reported a loss of clock.

TONE-PT (Tone Generator)

MO Name (in Alarm Log)	Alarm Level	Initial Command to Run	Full Name of MO
TONE-PT	MAJOR	test tone-clock PC sh	Tone Generator
TONE-PT	MINOR	test tone-clock PC sh	Tone Generator
TONE-PT	WARNING	release tone-clock PC sh	Tone Generator

NOTE:
Replacing the tone/clock circuit pack requires a special procedure which is described in the documentation for TONE-BD. That section also describes the LED display for this board.

The tone generator resides on the Tone/Clock circuit pack and provides all system tones such as dial tone, busy tone, and so on. If an active tone generator fails, its port network may not have tones (see the Tone Generator Transmission Test #40). For instance, a user may go off-hook and hear no dial tone. This problem will affect only users on the same port network in which the faulty Tone-Clock circuit pack resides. The system will be able to process certain type of calls (that is, internal calls will succeed while outgoing calls will not).

The Tone-Clock circuit pack also provides the clocks for the system and can serve as the synchronization reference. Therefore, when resolving alarms on the Tone-Clock circuit pack, the TDM-CLK (TDM Bus Clock) and SYNC (Synchronization) Maintenance documentation should be utilized as well as the TONE-BD (Tone-Clock Circuit Pack) Maintenance documentation.

Hardware Error Log Entries and Test to Clear Values

Table 3-342. Tone Generator Error Log Entries

Error Type	Aux Data	Associated Test	Alarm Level	On/Off Board	Test to Clear Value
0[1]	0	Any	Any	Any	test tone-clock PC r 1
1(a)	17664	Tone Generator Audit/ Update Test (#41)	MAJOR/ MINOR	ON	test tone-clock PC r 2
130(b)		None	MINOR	ON	test tone-clock PC Sh
257(c,e)	17667	None	MINOR	ON	

Continued on next page

Table 3-342. Tone Generator Error Log Entries — *Continued*

Error Type	Aux Data	Associated Test	Alarm Level	On/Off Board	Test to Clear Value
513(d,e)	17666	Tone Generator Audit/ Update Test (#41)	MINOR	ON	test tone-clock PC r 3
769	Any	Transmission Test (#40)	MAJOR/ MINOR	ON	test tone-clock PC r 3
1025		Crosstalk Test (#90)	MAJOR/ MINOR	ON	test tone-clock PC l r 2
1281	Any	Tone Generator Audit/ Update Test (#41)	MINOR	ON	test tone-clock PC r 3

Continued on next page

1. Run the Short Test Sequence first. If all tests pass, run the Long Test Sequence. Refer to the appropriate

Notes:

a. A failure in the tone generation facility on the indicated circuit pack has been detected. Replace the circuit pack. See "How to Replace a Tone-Clock Circuit Pack" in the TONE-BD section.

b. This error type indicates that the circuit pack has been removed or has been insane for more than 11 minutes. To clear the error, reinsert or replace the circuit pack.

c. The tone generation facility is having problems verifying that tones have been connected as requested.

d. The tone generation facility may or may not be able to generate tones.

e. Infrequent errors, at a rate which does not bring up an alarm, probably do not affect service, unless there are customer complaints of no tones, or incorrect tones which can not be explained in any other way. However, if an alarm is raised because this error is being repeatedly logged, then the circuit pack should be replaced. See "How to Replace a Tone-Clock Circuit Pack" in the TONE-BD section.

System Technician-Demanded Tests: Descriptions and Error Codes

Always investigate tests in the order presented in the following tables when inspecting errors in the system. By clearing error codes associated with the *SAKI Sanity Test*, for example, you may also clear errors generated from other tests in the testing sequence.

Use the **list configuration control** command to find the Tone-Clock Circuit Pack Code of the system. Then look for the Short and Long Test Sequences according to the Tone-Clock Circuit Pack Code.

For a system with a TN2182 Tone-Clock Circuit Pack:

Order of Investigation	Short Test Sequence	Long Test Sequence	D/ND[1]
SAKI Reset Test (#53) (a)		X	D
Clock Health Test (#46) (b)	X	X	ND
Control Channel Loop Around Test (#52) (a)	X	X	ND
Tone Generator Crosstalk Test (#90)		X	ND
Tone Generator Transmission Test (#40)	X	X	ND
Tone Generator Audit/Update Test (#41)	X	X	ND
TDM Bus Clock Circuit Status Inquiry Test (#148) (c)	X	X	ND
TDM Bus Clock Slip Inquiry Test (#149)(e)(c)	X	X	ND
TDM Bus Clock PPM Inquiry Test (#150) (c)	X	X	ND
TDM Bus Clock Parameter Update Test (#151) (c)	X	X	
Board Type Check Test (#574) (c)	X	X	
Standby Reference Health Check Test (#651) (c)		X	

1. D = Destructive; ND = Nondestructive

Notes:

a. Refer to XXX-BD (Common Port Circuit Pack) Maintenance documentation for descriptions of these tests.

b. Refer to TONE-BD (Tone-Clock Circuit Pack) section for descriptions of these tests.

c. Refer to TDM-CLK (TDM Bus Clock) section for descriptions of these tests.

Tone Generator Transmission Test (#40)

The purpose of this test is to verify that the tone generation hardware on the tone-clock circuit pack is capable of generating a subset of system tones and a set of test tones. This test does not verify all system tones the tone generator produces during normal system operation.

The test is performed in two parts. For the first part, the Tone Generator is told to generate the touch-tone digits. The digits are received and checked by a Tone Detector touch-tone detector. If any of the digits fail, the test is repeated using a touch-tone detector in another Tone Detector circuit pack.

For the second part, the Tone Generator is told to generate call progress tones that are detected and identified by a tone detector. These tones are:

- 440 Hz
- 2225 Hz
- Digital Count

The tone generator is then told to generate a sequence of test tones whose output levels are measured by a tone detector. These tones are:

- 404 Hz at 0 dB
- 1004 Hz at -16 dB
- 1004 Hz at 0 dB
- 2804 Hz at 0 dB

A Tone Detector general purpose tone detector listens for the tones and measures the quality of the tone. If any of the measured values are not within limits, the test is repeated using a general purpose tone detector in a different Tone Detector circuit pack. If the values are still out of the limits, the test will fail.

For all the failure cases of Test #40, do the following:

1. Check that all Tone Detector circuit packs have the same companding mode as that administered for the system. Correct the situation if there is a mismatch.
2. Run the long test sequence: **test tone-clock PC long repeat 1**.
3. If the problem persists, replace the Tone-Clock circuit pack by following the steps outlined in the "How to Replace a Tone-Clock Circuit Pack" section.

Table 3-343. TEST #40 Tone Generator Transmission Test

Error Code	Test Result	Description/ Recommendation
None	ABORT	The system was not able to allocate all the resources needed for this test or there was an Internal System Error.
1	ABORT	The system could not allocate all the resources needed to test the DTMF tones.
1001	ABORT	The system was not able to put the tone generation facility in the appropriate mode to test it.
1002	ABORT	The system could not allocate time slots for the test connection. This can happen when the system is heavily loaded. If the system is not heavily loaded, then test the TDM Bus via the **test tdm port-network PN#** command. Refer to TDM-BUS section for details. 1. Retry the command at 1-minute intervals a maximum of 5 times.
1003	ABORT	The system could not allocate a tone receiver for the test connection. This can happen when the system is heavily loaded or there is not a Tone Detector circuit pack in the port network where this test is being executed. 1. Make sure there is a Tone Detector circuit pack installed. 2. Allow approximately 1 minute for Tone Detector maintenance to run on the newly inserted Tone Detector circuit pack. 3. Retry the command at 1-minute intervals a maximum of 5 times.
1022	ABORT	Tone detection for the system is administered as wide broadband (tone detection mode 5), and the Tone Detector used for this test was not a TN2182. GPTD ports on other types of Tone Detector circuit packs are taken out of service since they cannot provide the administered function. 1. Change the tone-detection mode administered on the system-parameters country-options form (see *DEFINITY Enterprise Communications Server Release 6* Administration and Feature Description. Or 2. Remove all non-TN2182 circuit packs from the system.
2000	ABORT	Response to the test request was not received within the allowable time period. System resources required for this test are not available. 1. Retry the command at 1-minute intervals a maximum of 5 times.
2100	ABORT	System resources required for this test are not available. 1. Retry the command at 1-minute intervals a maximum of 5 times.
1 (a)	FAIL	DTMF generation failed for the active tone generator.
105 (a)	FAIL	Generation of 440-Hz failed.
109 (a)	FAIL	Generation of 2225-Hz failed.

Continued on next page

Table 3-343. TEST #40 Tone Generator Transmission Test — *Continued*

Error Code	Test Result	Description/ Recommendation
110 (b)	FAIL	Generation of 404-Hz level invalid.
111 (b)	FAIL	Generation of 1004-Hz low level invalid.
112 (b)	FAIL	Generation of 1004-Hz high level invalid.
113 (b)	FAIL	Generation of 2804-Hz level invalid.
115 (b,c)	FAIL	Generation of digital count sequence invalid.
120 (a)	FAIL	Generation of quiet tone failed.
1044 (a)	FAIL	DTMF generation failed to generate Digit 1 for the standby tone generator.
1045 (a)	FAIL	DTMF generation failed to generate Digit 5 for the standby tone generator.
1046 (a)	FAIL	DTMF generation failed to generate Digit 9 for the standby tone generator.
1047 (a)	FAIL	DTMF generation failed to generate Digit D for the standby tone generator.
	PASS	The tone generation facility is able to generate and transmit all the tones.

Notes:

Replacing the circuit pack is a service disrupting procedure. The test should be run several times with more than one failure before the replacement policy specified in the following notes is executed. Use the procedure described in "How to Replace a Tone-Clock Circuit Pack" in the TONE-BD section.

a. All the failure error codes marked with (a) will affect users. When the tone generation facility fails, replace the faulty Tone-Clock promptly.

b. All the failure error codes marked with (b) are almost transparent to the user. Users may or may not hear any noisy tones. This type of failure affects other MOs. Maintenance may not be able to run on other objects which use the tone generation facility (that is, Tone Detector Circuit Pack maintenance). In this case, the Tone-Clock circuit pack can be replaced as suitable to the customer.

c. Error code 115 may also be caused by TDM Bus corruption. This normally means a physical problem with bent backplane pins, TDM/LAN Bus cabling, or TDM/LAN Bus terminators. Such physical problems should especially be suspected if board replacement or other physical activity has occurred just before this error is observed.

   Use **display errors** to look for errors on other circuit packs in the carriers of the same Port Network as the Tone-Clock. If any are found, they should be resolved if possible, and the Tone-Clock circuit pack retested. If this

does not clear the problem, the Tone-Clock circuit pack should be replaced and the new one tested. If the problem persists, follow instructions for TDM Bus maintenance in this manual.

Tone Generator Update/Audit Test (#41)

The tone generation facility is refreshed with all the time slot tone information. This test also triggers in-line error messages the Tone-Clock circuit pack generates when it detects problems by itself.

A check is also made between the type of tone-clock being tested and the type of tone-clock needed based on system administration. The administration on the system-parameters country-options form requires a TN2182 circuit pack.

Table 3-344. TEST #41 Tone Generator Update/Audit Test

Error Code	Test Result	Description/ Recommendation
none	ABORT	The system was not able to allocate all the resources needed for this test.
2100	ABORT	System resources required for this test are not available.
1	FAIL	The system requires a TN2182 tone-clock to support the currently administered country-options tone generation parameters. 1. Check the administration on the system-parameters country-option form. Specifically, the Base Tone Generation Set on page 1 and any custom tone administration beginning on page 2. 2. Replace existing tone-clock circuit packs with a TN2182.
2	FAIL	The system requires TN2182 tone-clocks to support the currently administered country-options tone generation parameters. 1. Check the administration on the system-parameters country-option form. Specifically, the Base Tone Generation Set on page 1 and any custom tone administration beginning on page 2. 2. Replace existing tone-clock circuit packs with TN2182s.
	PASS	The tone generation facility has been successfully refreshed with its time-slot translation and system administration is consistent with this type of tone-clock. 1. Display the Hardware Error Log via the **display errors** command to make sure this circuit pack did not generate new errors.

Tone Generator Crosstalk Test (#90)

This test checks the ability of the Tone Generator to talk on a specific time slot. The other idle time slots are checked to make sure the Tone Generator put the tone on only the specified time slot.

Table 3-345. TEST #90 Tone Generator Crosstalk Test

Error Code	Test Result	Description/ Recommendation
None	ABORT	Internal System Error 1. Retry the command at 1-minute intervals a maximum of 5 times.
1001	ABORT	The system was not able to put the tone generation facility in the appropriate mode to test it.
1002	ABORT	The system could not allocate time slots for the test connection. This can happen when the system is heavily loaded. If the system is not heavily loaded, then test the TDM-BUS via the **test tdm port-network PN#** command. Refer to TDM-BUS section for details.
2000	ABORT	Response to the test request was not received within the allowable time period.
2100	ABORT	Could not allocate the necessary system resources to run this test. 1. Retry the command at 1-minute intervals a maximum of 5 times.
	FAIL	The Tone Generator could be defective. 1. Test the Tone-Clock circuit pack again via the **test tone-clock PC** command 2. If the test fails again, look at the Hardware Error Log for Tone Detector circuit pack errors. 3. If there are Tone Detector circuit pack errors, refer to Tone Detector Maintenance documentation (DTMR-PT, GPTD-PT, CLAS-PT, ETR-PT) to resolve these errors first. 4. If there are no Tone Detector circuit pack errors, then the Tone-Clock circuit pack should be replaced. See "How to Replace a Tone-Clock Circuit Pack" in the TONE-BD section.
	PASS	The tone generation facility is able to put tones out.

TSC-ADM (Administered Temporary Signaling Connections)

MO Name (in Alarm Log)	Alarm Level	Initial Command to Run	Full Name of MO
TSC-ADM	none	none	Administered Temporary Signaling Connections
TSC-ADM	none	none	Administered Temporary Signaling Connections

No alarms are generated for the TSC-ADM (Administered Temporary Signaling Connections) MO. Due to the unusual length of the full name of this MO (that is, Administered Temporary Signaling Connections), the abbreviation Administered TSC is used often in this Maintenance documentation.

In general, administered temporary signaling connections provide a path through ISDN-PRI switches for supplementary D-channel messages. ISDN-PRI applications [that is, Distributed Communications System (DCS)] use temporary signaling connections to exchange user information across an ISDN-PRI network. What makes Administered Temporary Signaling Connection unique is that these particular Temporary Signaling Connections stay active for an extended period time (that is, similar to a permanent data connection). These ADM Temporary Signaling Connections are used for DCS features that require a NCATSC, and the ADM TSC serves as the logical channel function in a DCS network.

A Non-Call Associated Temporary Signaling Connection (NCATSC) is a virtual connection established within a D-channel. The NCATSC connection provides user to user service by exchanging USER INFORMATION messages through the virtual connection in a D-channel without associating any B-channel connections.

An *Administered TSC* is a special NCA Administered TSC defined for the DCS over the ISDN-PRI D-channel application of G3iV1.1-286 or G3iV2-386. The Administered TSC connection is a special type of NCATSC that has an administratively defined endpoint and is established for an extended period of time.

There are two types of ADMTSCs:

- Permanent

  TSCs are established by the originating PBX (that is *Near-end* ADM TSC) or by the terminating PBX (that is, *Far-end* ADM TSC). Once these ADMTSCs are established, they remain active.

- As-Needed

  TSCs are established on an as-needed basis. In this case, the ADMTSC is established whenever it is needed, and not before.

ADMTSC maintenance provides a strategy to verify that a far-end can respond to an ISDN-PRI USER INFORMATION TSC heartbeat message, thereby indicating that user to user signaling is functioning. In addition, maintenance can retrieve the status of the ADMTSC's connection state.

Since ADMTSCs are administered on a per signaling group basis, the health of an ADMTSC also depends on the state of the D-channel or D-channel pair administered per signaling group. Refer to ISDN-SGR (ISDN-PRI Signaling Group) Maintenance documentation for details on ISDN-PRI NFAS and D-channel Backup maintenance. The two administration commands for ADMTSCs are as follows:

- **add signaling group #**
- **change signaling group #**

The two maintenance commands for ADMTSCs are as follows:

- **test tsc-administered signaling group #[/tsc index]**
- **status tsc-administered signaling group #/tsc index**

Hardware Error Log Entries and Test to Clear Values

ADM TSC Error Log Entries

Error Type	Aux Data	Associated Test	Alarm Level	On/Off Board	Test to Clear Value
3840-3967(a)	tsc index #	test tsc-administered			

Notes:

a. There is no Test to Clear Value for error types 3840-3967. The error types provide the following additional data that may prove useful when tracking down problems.

   This error indicates that a TSC Heartbeat Inquiry Test was run on an Active far-end Administered TSC from the switch. Upon receiving the heartbeat message, the network communicated to the switch that the call reference value is not currently in use on the ISDN interface. As a result, the error was logged. Check the signaling group status of the D-channel or D-channel pair via the **status signaling-group <group>** command for the Administered TSC. Check the status of the Administered TSC via the **status tsc-administered** command. Also check the administration of the Administered TSC on the switch.

   This error may only be affecting service for some DCS customers. Upon receipt of this error condition, the switch tears down and re-establishes the ADMTSC within 20 minutes.

b. The port field in the error log contains the signaling group number for TSC-ADM errors.

System Technician-Demanded Tests: Descriptions and Error Codes

Always investigate tests in the order presented in the following tables when inspecting errors in the system. By clearing error codes associated with the *TSC Heartbeat Inquiry Test,* for example, you may also clear errors generated

from other tests in the testing sequence.

Order of Investigation	Short Test Sequence	Long Test Sequence	D/ND[1]
TSC Heartbeat Inquiry Test (#604)			ND

1. D = Destructive; ND = Nondestructive

TSC Heartbeat Inquiry Test(#604)

This test can be invoked by system technician personnel for any ADMTSC administered in the switch. The following table indicates the possible error conditions that might be encountered when the test is invoked. Most of the error conditions do not log an error, but switched services may take some type of recovery action in certain instances.

This test sends a USER INFORMATION TSC heartbeat message inquiry across an Administered TSC to determine if the far-end can respond to a USER INFORMATION TSC heartbeat message.

Table 3-346. TEST #604 TSC Heartbeat Inquiry Test

Error Code	Test Result	Description/ Recommendation
2100	ABORT	Could not allocate the necessary system resources to run this test. 1. Reissue the **test tsc-administered** command at 1-minute intervals a maximum of 5 times.
1005	ABORT	The Administered TSC does not exist. 1. Display the administration for the Administered TSC. 2. If an Administered TSC is exists, reissue the **test tsc-administered** command.

Continued on next page

Table 3-346. TEST #604 TSC Heartbeat Inquiry Test

Error Code	Test Result	Description/ Recommendation
1113	ABORT	The D-channel is out-of-service. 1. Refer to the ISDN-LNK (ISDN-PRI Signaling Link Port) Maintenance documentation.
1145	ABORT	There is congestion in the network. 1. Issue the **status tsc-administered** command at 1-minute intervals a maximum of 5 times. 2. If the congestion does not clear, disable and enable the Administered TSC via the **change sig-group <group>** command. To disable the Administered TSC, display the (administration) Signaling Group Form via the **change sig-group <group>** command where **<group>** refers to the number of the signaling group under which the suspect TSC is administered. Change the `Enable` field to **n**. To enable the ADMTSC, change the `Enable` field to **y**. 3. If the congestion still does not clear, check other nodes in the network.
1146	ABORT	The congestion just occurred in the network. 1. Issue the **status tsc-administered** command at 1-minute intervals a maximum of 3 times. 2. If congestion does not clear, disable and enable the Administered TSC via the **change sig-group <group>** command. To disable the Administered TSC, display the (administration) Signaling Group Form via the **change sig-group <group>** command where **<group>** refers to the number of the signaling group under which the suspect TSC is administered. Change the `Enable` field to **n**. To enable the ADMTSC, change the `Enable` field to **y**. 3. If congestion still does not clear, check the other nodes in the network.
1147	ABORT	The ADMTSC is being torn down. 1. Issue the **status tsc-administered** command at 1-minute intervals a maximum of 3 times. 2. If ADMTSC is still down, disable and enable the ADM TSC via the **change sig-group <group>** command. **NOTE:** To disable the ADMTSC, display the (administration) Signaling Group Form via the **change sig-group <group>** command where **<group>** refers to the number of the signaling group under which the suspect TSC is administered. Change the `Enable` field to **n**. To enable the ADMTSC, change the `Enable` field to **y**. 3. If the ADMTSC is still down, check the other nodes in the network.

Continued on next page

Table 3-346. TEST #604 TSC Heartbeat Inquiry Test

Error Code	Test Result	Description/ Recommendation
1148	ABORT	The ADMTSC is enabled, but inactive (near-end). 1. Disable and enable the ADMTSC. 2. Reissue the **test tsc-administered** command. 3. If the ADMTSC is still inactive, check the other nodes in the network.
1149	ABORT	The ADMTSC is disabled. 1. Enable the TSC, and see if the status indicates "active." 2. Reissue the **test tsc-administered** command. 3. If the TSC still disabled, remove the ADMTSC from the system.
1181	ABORT	Ran out of ADMTSC resources. 1. Reissue the **test tsc-administered** command at 1-minute intervals a maximum of 3 times.
1182	ABORT	The BX.25 link is down at the gateway. 1. Disable the ADMTSC. 2. Check the status of the gateway link via the **status link link-no** command. 3. Once the gateway link indicates an "in-service" state, enable the Administered TSC. 4. Reissue the **test tsc-administered** command.
2000	ABORT	The Administered TSC is not responding to a TSC heartbeat inquiry. 1. Retry the **test tsc-administered** command at 1-minute intervals a maximum of 3 times. 2. If the problem continues to fail, obtain the status of the D-channel or D-channel pair associated with the ADMTSC via the **status sig-group <group>** command. If the D-channel is INS (that is, in-service) and the status of the ADMTSC appears to be active, disable and enable the ADMTSC through administration. **NOTE:** To disable the ADMTSC, display the (administration) Signaling Group Form via the **change sig-group <group>** command where **<group>** refers to the number of the signaling group under which the suspect TSC is administered. Change the `Enable` field to **n**. To enable the ADMTSC, change the `Enable` field to **y**. 3. Reissue the **test tsc-administered** command. 4. If the test fails, check the ADMTSC node on the other side of the network to verify that the ADM TSC is indeed active.

Continued on next page

Table 3-346. TEST #604 TSC Heartbeat Inquiry Test

Error Code	Test Result	Description/ Recommendation
2012	ABORT	Internal System Error. 1. Reissue the **test tsc-administered** command at 1-minute intervals a maximum of 5 times.
1	FAIL	The Administered TSC is not active (far-end). 1. Reissue the **test tsc-administered** command. 2. Verify that the Administered TSC node on the other side of the network is active. 3. Disable and enable the Administered TSC. 4. Retry the **test tsc-administered** command.
2	FAIL	Facility IE (Information Element) reject. 1. Check all other nodes in the network, and make sure Administered TSC is active.
	PASS	The Administered TSC responded to a heartbeat.

TTR-LEV (TTR Level)

MO Name (in Alarm Log)	Alarm Level	Initial Command to Run	Full Name of MO
TTR-LEV	WARNING	See Note[1]	TTR Level

1. See the "Repair Procedure for the TTR Level Maintenance Object" section.

A TN2182 Tone-Clock/Detector/Call Classifier and the TN744D Call Classifier circuit packs provide touch tone receivers (TTRs or DTMR-PTs) that are devices used to interpret touch tone calling signals and to translate the dual tones into the following valid digits: 0 through 9, *, and #. A Tone Detector circuit pack is a resource shared by all PBX users and also has general purpose tone detector ports (GPTD-PTs) to detect call progress tones, modem answer tones, and transmission test tones. Call Classifier Ports (CLSFY-PTs) have also been added to detect voice or network intercept tones. A Call Classifier Port (CLSFY-PT) can function as either a DTMR-PT or as a GPTD-PT.

When a user places a call from a digital or analog voice terminal on the switch, a TTR is needed to interpret the dual tone multifrequency signals sent from the voice terminal. The TTR is in use until the total number of digits needed is collected or until a time-out occurs. Dial tone is supplied to a user after receipt of an off-hook signal which signifies that a TTR is connected and ready to receive digits. For example, if there are 20 TTRs in the system being used simultaneously by 20 users at a given time, then the 21st user would not receive dial tone until a TTR becomes available. It is for this reason that it is necessary to have sufficient tone detectors in the system to prevent delay in receiving dial tone. The TTR-LEV errors can be used to determine a shortage of tone detectors. Use the **list measurements tone-receiver** command to determine tone detector usage. The minimum threshold values assigned on the Maintenance-Related System Parameters Form for TTRs (DTMR-PTs), CPTRs (GPTD-PTs), and CCRs (CLSFY-PTs) should match the number of touch tone receivers (TTR) and tone detectors (GPTD-PT) in the system. The numbers are 8 CCRs for each Call Classifier Port (TN744D) circuit pack. The threshold values are administered via the **change system-parameters maintenance** command on the Maintenance-Related System Parameters Form. The desired numbers are entered in the "TTR" (DTMR-PT), "CPTR" (GPTD-PT), and "Call Classifier" (CLSFY-PT) fields, respectively.

The TTR Level (Touch Tone Receiver Level) MO is used to represent the following possible events:

1. The total number of General Purpose Tone Detector Ports (GPTD-PTs), [also known as Call Progress Tone Receivers (CPTRs)], currently in service is less than the administered threshold number.

2. The total number of Dual Tone Multifrequency Receiver Ports (DTMR-PTs) [(also known as Touch Tone Receiver (TTRs)], currently in service is less than the administered threshold number.

The TTR Level maintenance performs a monitoring function. When one of the above events occurs, the switch reports it. At this point, the system is still operating properly, but the system capacity is reduced.

The above events can occur if:

1. The threshold number of General Purpose Tone Detector Ports (GPTD-PTs) for service or the threshold number of Dual Tone Multifrequency Receiver Ports (DTMR-PTs) for service is administered incorrectly on a Tone Detector circuit pack.
2. Too many General Purpose Tone Detector Ports (GPTD-PTs) or Dual Tone Multifrequency Receiver Ports (DTMR-PTs) have been taken out-of-service for a Tone Detector circuit pack (that is, the ports have been either busied-out by system technician or maintenance has taken them out-of-service).
3. Too many ports have been taken out-of-service for a Call Classifier circuit pack (that is, the ports have been busied-out by system technician or maintenance has taken them out-of-service).
4. There is an insufficient number of General Purpose Tone Detector Ports (GPTD-PTs) or Dual Tone Multifrequency Receiver Ports (DTMR-PTs) in the system for a Tone Detector circuit pack. Or there is an insufficient number of ports in the system for a Call Classifier circuit pack.

Repair Procedure for the TTR Level Maintenance Object

The following is a step-by-step approach to resolve the TTR Level maintenance alarm.

1. Execute the **display error** command. Determine if the TTR-LEV warning alarm is raised against the GPTD-PT level, the DTMR-PT level, or the CLSFY-PT level. In the Hardware Error Log Table, the error type field of the TTR-LEV MO has a value of 2 for DTMR-PT level, a value of 4 for GPTD-PT level, or a value of 6 for CLSFY-PT level.

   Perform the actions described in Step 2 for the DTMR-PT, the GPTD-PT, or the CLSFY-PT.

2. Issue the **change system-parameters maintenance** command. Check the administered value(s) for TTRs and CPTRs for service on the Tone Detector circuit packs or for CCRs on the Call Classifier Port (CLSFY-PT) circuit pack. If a threshold value is set too high, change it to a lower value via the **change system-parameters maintenance** command and wait one minute for the alarm to clear.

3. Execute the **display error** command. Look for a GPTD-PT, DTMR-PT, or CLSFY-PT that has been busied out. A port that has been busied out has a value of 18 in the error type field of the Hardware Error Log.

   For each of the busied-out ports, use the following procedure:

   - Determine why the port was busied out.
   - If the port can be placed back into service, test the port via the **test port PCSSpp** command.
   - If all the tests pass, release the port via the **release port PCSSpp** command. Then wait one minute for the TTR Level alarm to clear.

   If this does not clear the TTR Level alarm, proceed to Step 4.

4. Execute the **display alarm** command. Determine the address of the Tone Detector circuit pack which contains the defective (alarmed) GPTD-PT or DTMR-PT.

   Execute the **test board PCSS long rep 3** command where PCSS is the address (that is, port network number, carrier designation, and slot address) of the Tone Detector circuit pack or Call Classifier circuit pack containing the defective (alarmed) GPTD-PT or DTMR-PT.

   If this does not clear the TTR Level alarm, proceed to Step 5.

5. At this point, the only way to clear the alarm is to replace the Tone Detector circuit pack or Call Classifier circuit pack containing the defective (alarmed) GPTD-PT, DTMR-PT or CLSFY-PT.

Hardware Error Log Entries and Test to Clear Values

Table 3-347. TTR Level Error Log Entries

Error Type	Aux Data	Associated Test	Alarm Level	On/Off Board	Test to Clear Value
1 (a)	1	None			
2 (b)	2		WARNING (See the WARNING message below)	OFF	
3 (c)	3	None			
4 (d)	4		WARNING	OFF	
5 (e)	5	None			
6 (f)	6		WARNING	OFF	
7 (g)	7		MAJOR	OFF	
8 (h)	8		MINOR	OFF	
9 (i)	9		MINOR	OFF	

WARNING:
The Alarm is upgraded to MAJOR if the Base Tone Generator is set to 12 (France).

Notes:

a. Error code 1 does not indicate a current error condition. It indicates that the number of DTMR ports in service was below the administered threshold, but is now equal to or greater than the threshold. These errors are typically generated during boot time or other transitional states when the ports are being brought into service.

b. The total number of DTMR ports currently in service is below the administered threshold. To clear the alarm, refer to the repair procedure described above.

c. Error code 3 does not indicate a current error condition. It indicates that the number of GPTD ports in service was below the administered threshold, but is now equal to or greater than the threshold. These errors are typically generated during boot time or other transitional states when the ports are being brought into service.

d. The total number of GPTD ports currently in service is below the administered threshold. To clear the alarm, refer to the repair procedure describe above.

e. Error code 5 does not indicate a current error condition. It indicates that the number of Call Classifier ports (CLSFY-PT) in service was below the administered threshold, but is now equal to or greater than the threshold. These errors are typically generated during boot time or other transitional states when the ports are being brought into service.

f. The total number of Call Classifier ports currently in service is below the administered threshold. To clear the alarm, refer to the repair procedure described above.

g. There are currently no DTMR ports in service. To clear the alarm, refer to the repair procedure described above.

h. There are currently no GPTD ports in service. To clear the alarm, refer to the repair procedure described above.

i. There are currently no Call Classifier ports in service. To clear the alarm, refer to the repair procedure described above.

VC-BD

MO Name (in Alarm Log)	Alarm Level	Initial Command to Run[1]	Full Name of MO
VC-BD	MAJOR	test board PCSS l r#	Voice Conditioner Circuit Pack
VC-BD	MINOR	test board PCSS l r#	Voice Conditioner Circuit Pack
VC-BD	WARNING[2]	test board PCSS s r#	Voice Conditioner Circuit Pack

1. Where P is the port network number (1 for PPN); C is the carrier designation (for example, A, B, or C); and SS is the address of the slot in the carrier where the circuit pack is located (for example, 01, 02, ...).
2. Refer to XXX-BD (Common Port Board) Maintenance documentation.

CAUTION:
If the TN788 Voice Conditioner Circuit Pack (VC-BD) is not Vintage 2 or later, it must be replaced.

The TN788 Voice Conditioner Circuit Pack (VC-BD) is a service circuit pack that provides conditioning for the audio signals from multimedia equipment based on the CCITT H.221 standard. The TN788 transcodes, gain adjusts, and bridges the audio bit streams demultiplexed by the TN787 (MMI) circuit pack and transmits encoded, exclusive audio conference sums onto the TDM bus so that the MMI can multiplex the audio, video, and data streams for the H.221 endpoints.

Error Log Entries and Test to Clear Values

Table 3-348. VC-BD Error Log Entries

Error Type	Aux Data	Associated Test	Alarm Level	On/Off Board	Test to Clear Value
0[1]	0	Any	Any	Any	test board PCSS sh r 1
1 (a)	Any	None	MIN	ON	
18 (b)	0	busyout board PCSS	WNG	OFF	release board PCSS
257 (c)	Any	Control Channel Loop Test (#52)	MIN	ON	test board PCSS r 20
513 (d)	4352 to 4357				
769 (e)	4358				

Continued on next page

Table 3-348. VC-BD Error Log Entries — *Continued*

Error Type	Aux Data	Associated Test	Alarm Level	On/Off Board	Test to Clear Value
1025 (f)	4363	NPE Audit Test (#50)			
1281 (g)	Any	SAKI Sanity Test (#53)	MAJ	ON	
1293 to 1294 (h)	46088 to 46096	SAKI Sanity Test (#53)	MIN	ON	See note (g)
1538 (i)	46082		MIN	ON	

1. Run the short test sequence first. If all tests pass, run the long test sequence. Refer to the appropriate test description and follow the recommended procedures.

Notes:

a. The circuit pack stopped functioning or it was removed from the system. This alarm is logged approximately 11 minutes after the circuit pack is removed and/or the SAKI Sanity Test (#53) fails.

To resolve this error, insert a circuit pack in the same slot as the error indicates, if the circuit pack is not already in the system. Or, if the circuit pack is in the system and the red LED is on, then follow instructions for Red alarms.

CAUTION:
If the TN788 Voice Conditioner Circuit Pack (VC-BD) is not Vintage 2 or later, it must be replaced.

b. This circuit pack is busied out by the **busyout board PCSS** command.

c. Transient communication problems exist between the switch and this circuit pack. Execute the **test board PCSS** command and refer to the repair procedures for the Control Channel Loop Around Test (#52).

d. The circuit pack detected an on-board hardware failure. The reported aux data values correspond to the following detected errors:

Error	Description
4352	External RAM error
4353	Internal RAM error
4355	ROM Checksum error
4357	Instruction set error

Reset the circuit pack by executing the **busyout board PCSS, reset board PCSS**, and **release board PCSS** commands. When it is reset, the circuit pack executes a set of tests to detect the presence of any of the above faults. The detection of one these errors during initialization causes the circuit pack to lock-up and appear insane to the system. See the repair procedures in footnote (a) for error type 1.

e. The circuit pack detects a program logic error. While no action is required, this error may lead to errors of other types being reported against this circuit pack.

f. The circuit pack cannot update NPE memory and read it back. This error type can be ignored, but it may lead to other error types being reported against this circuit pack.

g. A critical hardware failure has been detected on the circuit pack. Use **busyout board PCSS**, **reset board PCSS**, followed by **release board PCSS**. If test #53 passes, the on-board circuitry is healthy. Use **test board PCSS long clear** to retire the alarm. If test #53 fails, replace the circuit pack.

h. The circuit pack detected a critical hardware failure. Reset the circuit pack by issuing the **busyout board PCSS**, **reset board PCSS**, and **release board PCSS** commands. If the Circuit Pack Restart Test (#594) passes, then the on-board circuitry is healthy. Retire the alarm by issuing the **test board PCSS long clear** command. If the Circuit Pack Restart Rest (#594) fails, replace the circuit pack.

The reported error types correspond to the following detected errors:

Error	Description
1293	On-board auxiliary processor insane
1294	Internal memory access error

i. The circuit pack is hyperactive — it is flooding the switch with messages sent over the control channel. The circuit pack is taken out of service when a threshold number of these errors is reported to the switch. Clear the alarm by using **busyout board PCSS**, **reset board PCSS**, **test board PCSS long clear**, and **release board PCSS**. If the error recurs within 10 minutes, then replace the circuit pack.

System Technician-Demanded Tests: Descriptions and Error Code

Order of Investigation	Short Test Sequence	Long Test Sequence	D/ND[1]
Control Channel Loop-Around Test (#52) (a)	X	X	ND

1. D = Destructive; ND = Nondestructive

CAUTION:
If the TN788 Voice Conditioner Circuit Pack (VC-BD) is not Vintage 2 or later, it must be replaced.

Note:

a. Refer to the repair procedure described in the "XXX-BD (Common Port Circuit Pack)") maintenance documentation for a description of this test.

Control Channel Loop Around Test (#52)

Refer to the repair procedure described in the XXX-BD (Common Port Circuit Pack) maintenance documentation as Control Channel Loop Around Test (#52).

VC-DSPPT

MO Name (in Alarm Log)	Alarm Level	Initial Command to Run[1]	Full Name of MO
VC-DSPPT	MAJOR	test port PCSSpp l r#	Voice Conditioner DSP Port
VC-DSPPT	MINOR	test port PCSSpp l r#	Voice Conditioner DSP Port
VC-DSPPT	WARNING	test port PCSSpp l r#	Voice Conditioner DSP Port

1. Where P is the port network number (1 for PPN); C is the carrier designation (for example, A, B, or C); and SS is the address of the slot in the carrier where the circuit pack is located (for example, 01, 02, ...), and pp is the address of the port (for example, 01, 02, ...).

Each Voice Conditioner Circuit Pack (VC-BD) provides two types of resources:

1. Transcoder Resources used for encoding and decoding audio formats
2. Summer Resources used for summing audio from different sources

The eight Voice Conditioner DSP ports are the transcoder resources on the VC-BD.

Error Log Entries and Test to Clear Values

Table 3-349. VC-DSPPT Error Log Entries

Error Type	Aux Data	Associated Test	Alarm Level	On/ Off Board	Test to Clear Value
0[1]	0	Any	Any	Any	test port PCSSpp sh r 1
18 (a)	0	busyout port PCSSpp	WNG	OFF	release port PCSSpp
257 (b)	Any	NPE Crosstalk Test (#6)	MIN	ON	test port PCSSpp 1 r 3
513 (c)	Any	VC DSP Port Local TDM Loopback Test (#1104)	MIN	ON	test port PCSSpp sh r 3
778 to 781 (d)	Any	VC Port Reset DSP Test (#1106)	MAJ	ON	See note (d)
1025 (e)			WNG	ON	
1281 (f)	Any	VC DSP Port DSP Loopback Test #(1105)	MIN	ON	test port PCSSpp sh r 3
3840 (g)					

1. Run the short test sequence first. If all test pass, run the long test sequence. Refer to the appropriate test description and follow the recommended procedures.

Notes:

a. This port has been busied out by the **busyout port PCSSpp** command.

b. The VC DSP Port NPE Crosstalk Test(#1103) failed.

c. The VC DSP Port Local TDM Loopback Test(#1104) failed. Run the Long Test Sequence.

d. A critical hardware failure has been detected on the circuit pack. Reset the port by the **busyout port PCSSpp** and **reset port PCSSpp** commands. If the VC Reset DSP Test (#1106) passes, then the on-board circuitry is healthy. Retire the alarm with the **test port PCSSpp long clear** command.

e. The VC DSP port reported loss of framing on the Service Channel between the VC and MMI circuit packs.

f. The VC DSP Port DSP Loopback Test (#1105) failed.

g. The DSP corresponding to this port on the VC circuit pack reported a firmware error. No action is required.

System Technician-Demanded Tests: Descriptions and Error Codes

Always investigate tests in the order presented in the table below. By clearing error codes associated with the DSP NPE Crosstalk Test, for example, you may also clear errors generated from other tests in the testing sequence.

Order of Investigation	Short Test Sequence	Long Test Sequence	D/ND[1]
DSP NPE Crosstalk Test (#1103)		X	D
TDM Loopback Test (#1104)	X	X	D
DSP Loopback Test (#1105)	X	X	D

1. D = Destructive; ND = Nondestructive

VC DSP Port NPE Crosstalk Test (#1103)

This test is destructive.

The NPE controls port connectivity and gain and provides conferencing functions. The NPE Crosstalk test verifies that this port's NPE channel talks on the selected time slot and never crosses over to time slots reserved for other connections. If the NPE is not working correctly, one-way and noisy connections may be observed. This test is part of the port's long test sequence and takes approximately 20 to 30 seconds to complete.

Table 3-350. TEST #1103 VC DSP Port NPE Crosstalk Test

Error Code	Test Result	Description/ Recommendation
1000 1001	ABORT	System resources required to run this test are not available. The port may be busy with a valid call. 1. Retry the command at 1-minute intervals a maximum of 5 times.
2012	ABORT	Internal system error
2100	ABORT	Could not allocate the necessary resources to run this test. 1. Retry the command at 1-minute intervals a maximum of 5 times.
0-3	FAIL	The NPE of the tested port was transmitting in error. This causes noisy and unreliable connections. 1. Replace circuit pack.
	PASS	The port is correctly using its allocated time slots. 1. To be sure that this is not an intermittent problem, repeat this test a maximum of 10 times to make sure that it continues to pass. 2. If complaints still persist, examine the station, connections, and wiring.

VC DSP Port Local TDM Loopback Test (#1104)

This test is destructive.

This test verifies the connectivity of a VC DSP Port across the TDM bus. It aborts if calls associated with the port are in progress. Failure of this test indicates an on-board fault associated with the port hardware on the circuit pack. The Loopback Test runs the following tests:

1. A looparound test across the TDM bus.
2. A conference circuit test.

The tests are run in the above order; if one test fails, an error code is returned and the remaining tests in the sequence are not executed.

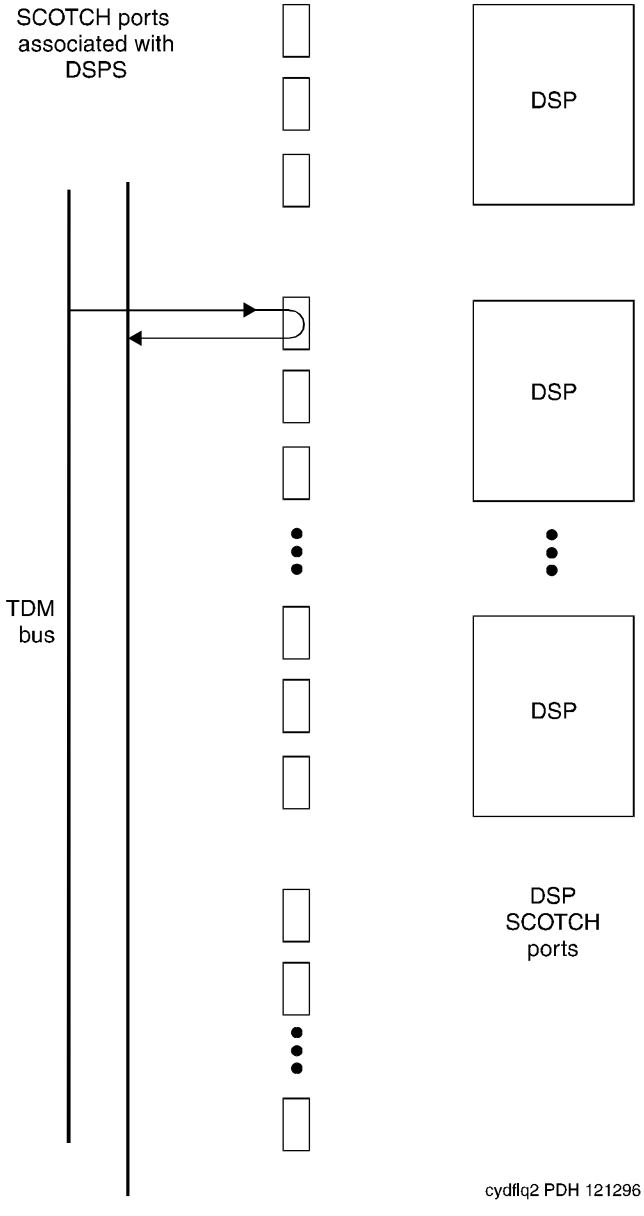

Figure 3-31. VC Circuit Pack DSP Port Local TDM Loopback Test

Table 3-351. TEST #1104 VC DSPPT Local TDM Loopback Test

Error Code	Test Result	Description/Recommendation
1000 1001	ABORT	System resources required to run this test are not available, or the port is busy with a valid call. 1. Retry the command at 1-minute intervals a maximum of 5 times.
1002	ABORT	The system could not allocate time slots for the test. The traffic load on the system is very high, or time slots may be out-of-service due to TDM-BUS errors. Refer to "TDM-BUS (TDM Bus)" to diagnose TDM Bus errors. 1. If the system has no TDM-BUS errors and is not handling heavy traffic, repeat the test at 1-minute intervals a maximum of 5 times.
1003	ABORT	The system could not allocate a Tone Detector for the test. The system is oversized for the number of Tone Detectors present, or some Tone Detectors are out-of-service. 1. Resolve any "TTR-LEV (TTR Level)" errors. 2. Resolve any "TONE-PT (Tone Generator)" errors. 3. If neither condition exists, retry the test at 1-minute intervals.
1004	ABORT	The port is seized by a user for a valid call. Use the **status station** command for the station associated with this port and determine if the port is available for testing. 1. Retry the command at 1-minute intervals a maximum of 5 times.
2000	ABORT	Response to the test was not received from the VC-BD circuit pack within the allowable time period. 1. If this result occurs repeatedly, attempt to reset the port by using the **busyout port PCSSpp** and **reset port PCSSpp** commands. 2. If this result occurs again, replace the circuit pack.
2012	ABORT	Internal system error 1. Retry the command at 1-minute intervals a maximum of 5 times.
2100	ABORT	Could not allocate the necessary resources to run this test. 1. Retry the command at 1-minute intervals a maximum of 5 times.
2103	ABORT	The system could not make the conference connection for the test. 1. Retry the command at 1-minute intervals a maximum of 5 times.
0-3	FAIL	The TDM Looparound Test failed. 1. Replace circuit pack.
4-7	FAIL	The Conference Circuit Test failed. 1. Replace circuit pack.

Continued on next page

Table 3-351. TEST #1104 VC DSPPT Local TDM Loopback Test — *Continued*

Error Code	Test Result	Description/Recommendation
	PASS	The VC DSP Port Local TDM Looparound Test passed.

VC-DSP Port DSP Loopback Test (#1105)

This test is destructive.

This test verifies the connectivity of a VC-DSPPT across the TDM bus. It aborts if calls associated with the port are in progress. Failure of this test indicates an on-board fault associated with the port hardware on the circuit pack.

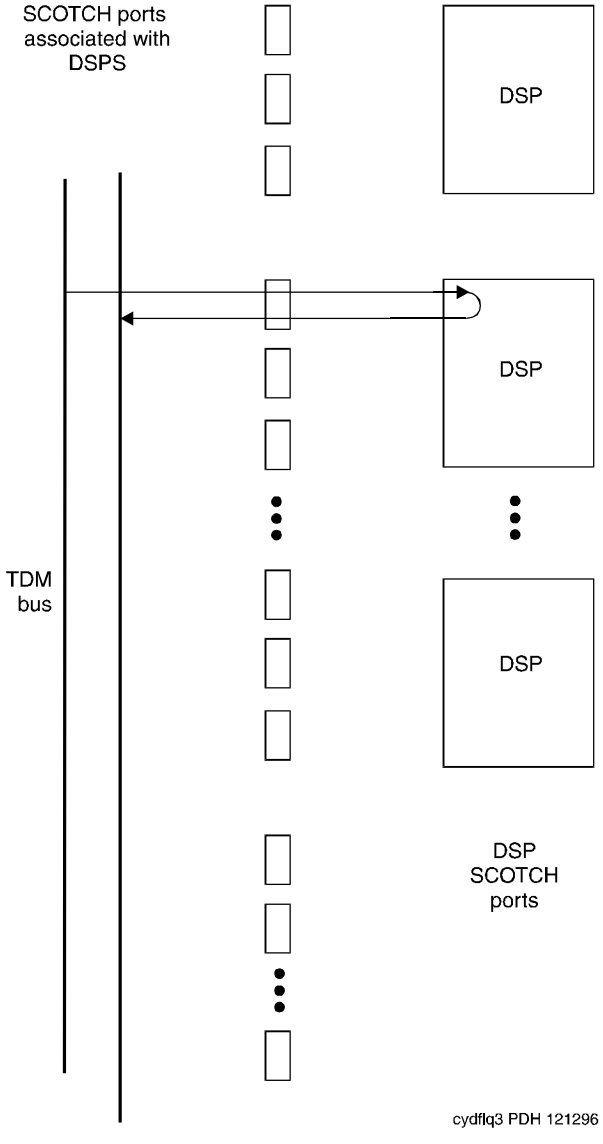

Figure 3-32. VC Circuit pack DSP Port DSP Looparound Test

Table 3-352. TEST #1105 VC-DSP Port DSP Loopback Test

Error Code	Test Result	Description/Recommendation
1000	ABORT	System resources required to run this test are not available, or the port is busy with a valid call. 1. Retry the command at 1-minute intervals a maximum of 5 times.
1002	ABORT	The system could not allocate time slots for the test, the traffic load on the system is very high, or time slots are out-of-service due to TDM-BUS errors. Refer to "TDM-BUS (TDM Bus)" to diagnose TDM Bus errors. 1. If the system has no TDM-BUS errors and is not handling heavy traffic, repeat the test at 1-minute intervals a maximum of 5 times.
1003	ABORT	The system could not allocate a Tone Detector for the test, the system is oversized for the number of Tone Detectors present, or some Tone Detectors are out-of-service. 1. Resolve any "TTR-LEV (TTR Level)" errors. 2. Resolve any "TONE-PT (Tone Generator)" errors. 3. If neither condition exists, retry the test at 1-minute intervals a maximum of 5 times.
1004	ABORT	The port has been seized by a user for a valid call. Use the **status station** command for the station associated with this port and determine if the port is available for testing 1. Retry the command at 1-minute intervals a maximum of 5 times.
2000	ABORT	Response to the test request was not received from the VC-BD circuit pack within the allowable time period. 1. If this result occurs repeatedly, reset the circuit pack if the other ports are not in use by using the **busyout port PCSSpp** and **reset port PCSSpp** commands. 2. If this result occurs again, replace the circuit pack.
2012	ABORT	Internal system error 1. Retry the command at 1-minute intervals a maximum of 5 times.
2100	ABORT	Could not allocate the necessary system resources to run this test. 1. Rerun the test at 1-minute intervals a maximum of 5 times.
0, 1	FAIL	The VC-DSPPT DSP Loopback Test failed. 1. Replace the circuit pack.
	PASS	The VC DSPPT DSP Loopback Test passed

VC Port Reset DSP Test (#1106)

This test is destructive.

This test resets the VC-DSPPT and the DSP associated with it. As part of the reset procedure, the VC-DSPPT will execute a series of self- tests on the hardware. If these self- tests fail, the test will fail; otherwise the test will pass.

Before executing the test, the VC-DSPPT must be busied out by executing the **busy port PCSSpp** command. After the completion of the test, the VC-DSPPT must be released by executing the **release port PCSSpp** command.

Table 3-353. TEST #1106 VC Port Reset DSP Test

Error Code	Test Result	Description/Recommendation
1000	ABORT	System resources required to run this test are not available, or the port may be busy with a call. 1. Retry the command at 1-minute intervals a maximum of 5 times.
1015	ABORT	The VC-DSPPT is not busied out. 1. Busy out the VC-DSPPT by executing the **busy port PCSSpp** command and then retry the test.
2000	ABORT	Response to the test was not received from the VC-DSPPT within the allowable time period. 1. Retry the command at 1-minute intervals a maximum of 5 times. 2. If this result occurs again, replace the circuit pack.
2012	ABORT	Internal system error 1. Retry the command at 1-minute intervals a maximum of 5 times.
2100	ABORT	Could not allocate the necessary resources for this test. 1. Retry the command at 1-minute intervals a maximum of 5 times.
	FAIL	The reset of the VC-DSPPT was unsuccessful. 1. Replace circuit pack.
	PASS	The VC-DSPPT was successfully reset. 1. Release the VC-DSPPT by executing the **reset port PCSSpp** command.

VC-LEV (Voice Conditioner DSP Port Level)

MO Name (in Alarm Log)	Alarm Level	Initial Command to Run	Full Name of MO
VC-LEV	MAJOR	See "Resolving VC-LEV Errors/Alarms"	VC-LEV

Enable the MMCH feature on the System-Parameters Customer-Options form before changing the fields.

The Voice Conditioner (VC) Port Level MO monitors VC efficiency by tracking the number of VC ports that are in-service, and then comparing that number with the value entered in the VC field on the System-Parameters Maintenance form. This VCs field is located under the Minimum Maintenance Thresholds section. The VCs field contains the minimum number of VC ports needed for the Multimedia Call Handling (MMCH) feature, and is an administrable field. The VCs field must contain a number between 0 and 126, and is entered by the system administrator. The MMCH feature must be enabled on the System-Parameters Customer-Options form before the VCs field can be changed to a number greater than 0. For example, administering 8 in that field means 1 circuit pack. The algorithm for determining that a low level of VC resources exists uses the number entered in the VCs field, and the number of VCs that are in-service in the system.

Each VC circuit pack contains 16 physical ports: 8 ports are reserved for VC-DSPPT ports, and the remaining 8 ports are designated as VC-SUMPT ports. The 8 DSP ports are made up of 4 encoder and 4 decoder resources that encode and decode audio formats. Thus, *one VC circuit pack is required for every 8 ports of MMCH port capacity*. If the number of in-service VC ports falls below the MMCH port capacity (value entered on the System-Parameters Maintenance form under the Minimum Maintenance Thresholds section and in the VCs field), a VEC-LEV error is logged. If this outage continues for 15 minutes a MAJOR alarm is raised.

Resolving VC-LEV Errors/Alarms

VC ports are a key part of the MMCH feature, any loss in the number of ports available for use degrades the MMCH customer-defined service level.

If a VC circuit pack or port is busied out using the **busyout board** or **busyout port** command, these out-of-service ports are not included in the VC level calculation, thus allowing a technician to busy out a VC circuit pack for maintenance reasons without causing a MAJOR alarm to be raised.

NOTE:
When diagnosing a VC-LEV problem, resolve any alarms raised against VC-BD or VC-DSPPT maintenance objects. Clearing VC-BD or VC-DSPPT alarms may clear the VC-LEV alarm.

The VC circuit pack is maintained by the software similarly to the Tone Detector circuit pack. Tone Detector circuit packs may be removed and reinserted in any port board slot without administration. The same rule applies to VC circuit packs. If a VC circuit pack is removed from service logically (by failing the Archangel sanity scan test) or is removed from service physically (by physically removing the circuit pack from the carrier), no error/alarm is raised against VC-BD or VC-DSPPT maintenance objects. Therefore, if a VC-LEV error/alarm exists, and none has been raised against VC-BD or VC-DSPPT maintenance objects, a VC circuit pack may have been removed from service causing the VC-LEV error/alarm. To resolve a VC-LEV MAJOR alarm, restore the number of VC ports available for service to be equal to or more than the calculated port capacity (value entered in the VCs field).

To determine how many VC circuit packs are needed for the MMCH feature:

1. Display the System-Parameters Maintenance form by executing the command **display system-parameters maintenance**.
2. Locate the number listed in the Minimum Maintenance Threshold (VCs) field. The MMCH feature requires one VC circuit pack for each four ports listed in the Minimum Maintenance Threshold (VCs) field.
3. Divide the Minimum Maintenance Threshold value by 8 to determine the number of VC circuit packs needed. For example, a port capacity of 12 listed in the Minimum Maintenance Threshold (VCs) field would require 2 VC circuit packs.
4. Use the **list configuration** command to verify that the number of VC circuit packs listed agrees with the required number of VC circuit packs (determined in step 3). If the number of VC circuit packs listed in the step 3 differs from the calculated number, restore the number of VC circuit packs to the correct value, in order to resolve the VC-LEV alarm.

Error Log Entries and Test to Clear Values

Table 3-354. VC-LEV Error Log Entries

Error Type	Aux Data	Associated Test	Alarm Level	On/ Off Board	Test to Clear Value
1 (a)	Any	None	MAJOR	OFF	

Notes:

a. The number of VC resources in the system that are in service has fallen below the calculated minimum value. If the number of in-service VC ports falls below the MMCH port capacity (value entered in the Minimum Maintenance Threshold VCs field on the system parameters maintenance form), a VEC-LEV error is logged. If this outage continues for 15 minutes a MAJOR alarm is raised. To resolve this alarm, correct the out-of-service problem by following the procedures below:

   1. See "VC-DSPPT" and "VC-BD" and resolve any associated alarms.
   2. If a VC-LEV error/alarm exist and none has been raised against VC-BD or VC-DSPPT maintenance objects, a VC circuit pack may have been removed from service causing the VC-LEV error/alarm. To resolve a VC-LEV MAJOR alarm, restore the number of VC ports available for service to be equal to or more than the calculated port capacity. See "Resolving VC-LEV Errors/Alarms" above for details.

System Technician-Demanded Tests: Descriptions and Error Code

There are no System Technician-Demanded test for VC-LEV.

VC-SUMPT

MO Name (in Alarm Log)	Alarm Level	Initial Command to Run[1]	Full Name of MO
VC-SUMPT	MAJ	test port PCSS l r#	Voice Conditioner Summer Port
VC-SUMPT	MIN	test port PCSS l r#	Voice Conditioner Summer Port
VC-SUMPT	WNG	test port PCSS s r#	Voice Conditioner Summer Port

1. Where P is the universal cabinet number (1 for PPN); C is the carrier designation (for example, A, B, or C); SS is the address of the slot in the carrier where the circuit pack is located (for example, 01, 02, ...).

Each Voice Conditioner Circuit Pack (VC-BD) provides two types of resources:

1. Transcoder Resources that are used for encoding and decoding audio formats
2. Summer Resources that are used for summing audio formats from different sources.

The Voice Conditioner Summer ports (VC-SUMPT) are the summer resources on the VC-BD. There are 8 such ports on a VC-BD.

Error Log Entries and Test to Clear Values

Table 3-355. VC-SUMPT Error Log Entries

Error Type	Aux Data	Associated Test	Alarm Level	On/Off Board	Test to Clear Value
0[1]	0	Any	Any	Any	test port PCSSpp sh r 1
18 (a)	0	busyout port PCSS	WNG	OFF	release port PCSSpp
130 (b)			WNG	ON	test port PCSSpp sh
257 (c)	Any	Control Channel Loop Test (#52)	MIN	ON	test board PCSSpp 1 r 3
513 (d)	Any	VC Summer Port Local Loopback Test #(1100)	MIN	ON	test board PCSSpp sh r 3

1. Run the short test sequence first. If all test pass, run the long test sequence. Refer to the appropriate test description and follow the recommended procedures.

Notes:

a. This port has been busied out with the **busyout port PCSSpp** command.

b. The circuit pack has been removed or has been insane for more than 11 minutes. To clear the error, replace or reinsert the circuit pack.

c. The NPE Crosstalk Test(#1103) failed.

d. The VC Summer Port Local TDM Loopback Test(#1100) failed.

System Technician-Demanded Tests: Descriptions and Error Codes

Always investigate tests in the order presented in the table below. By clearing error codes associated with the TDM Loopback Test, for example, you may also clear errors generated from other tests in the testing sequence.

Order of Investigation	Short Test Sequence	Long Test Sequence	D/ND[1]
NPE Crosstalk Test (#6) (a)		X	D
TDM Loopback Test (#1100)	X	X	D

1. D = Destructive; ND = Nondestructive

NPE Crosstalk Test (#6)

This test is destructive.

The NPE Crosstalk test verifies that this port's NPE channel talks on the selected time slot and never crosses over to time slots reserved for other connections. If the NPE is not working correctly, one-way and noisy connections may be observed. This test is part of the port's long test sequence and takes approximately 20 to 30 seconds to complete.

Table 3-356. TEST #6 NPE Crosstalk Test

Error Code	Test Result	Description/Recommendation
1000	ABORT	System resources required to run this test are not available. The port may be busy with a valid call. 1. Retry the command at 1-minute intervals a maximum of 5 times.

Continued on next page

Table 3-356. TEST #6 NPE Crosstalk Test — *Continued*

Error Code	Test Result	Description/Recommendation
2012	ABORT	Internal system error
2100	ABORT	Could not allocate the necessary resources to run this test. 1. Retry the command at 1-minute intervals a maximum of 5 times.
	FAIL	The NPE of the tested port was transmitting in error, causing noisy and unreliable connections. 1. Replace the circuit pack.
	PASS	The port is correctly using its allocated time slots. 1. To be sure that this is not an intermittent problem, repeat this test a maximum of 10 times. 2. If complaints still persist, examine the station, connections, and wiring.

VC Summer Port Local TDM Loopback Test (#1100)

This test is destructive.

This test verifies the connectivity of a VC Summer Port across the TDM bus. It aborts if calls associated with the port are in progress. Failure of this test indicates an on-board fault associated with the port hardware on the circuit pack. The Loopback Test runs the following tests:

- A Looparound test across the TDM bus.
- A conference circuit test.

The tests are run in the above order. If the first test fails, the switch returns an error code, and the second test is not executed.

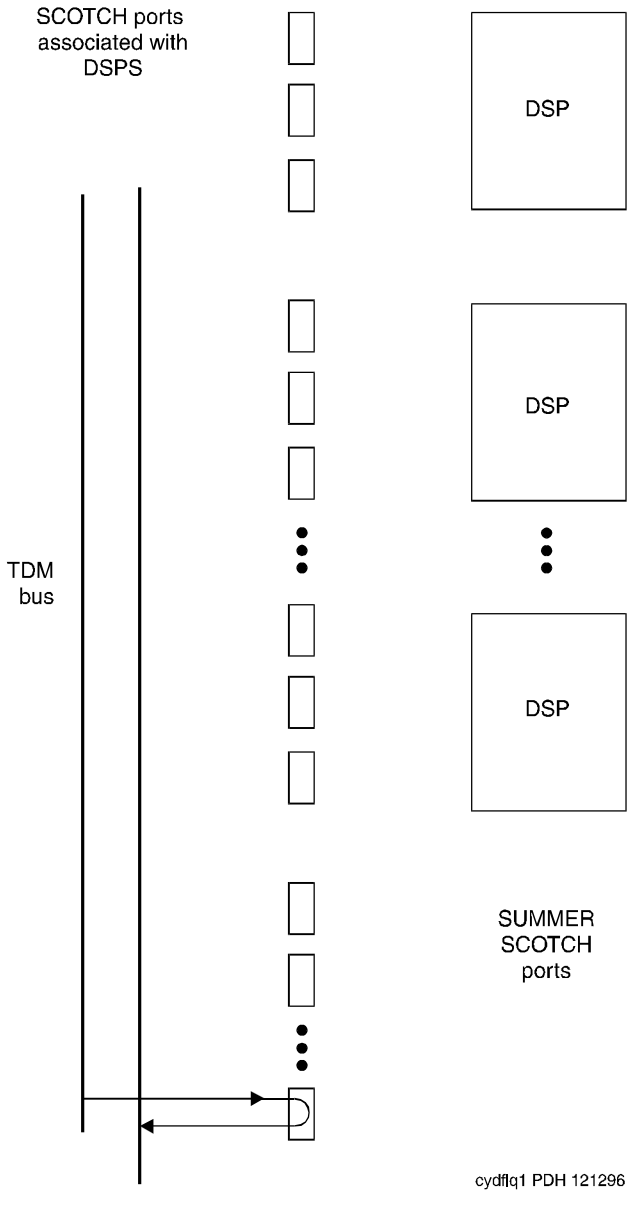

Figure 3-33. VC Circuit Pack Summer Port Loopback Test

Table 3-357. TEST #1100 VC Summer Port Local TDM Loopback Test

Error Code	Test Result	Description/Recommendation
1000	ABORT	System resources required to run this test are not available, or the port may be busy with a valid call. 1. Retry the command at 1-minute intervals a maximum of 5 times.
1002	ABORT	The system could not allocate time slots for the test. The traffic load on the system is very high or time slots are out-of-service due to TDM-BUS errors. Refer to "TDM-BUS (TDM Bus)" maintenance documentation to diagnose any active TDM Bus errors. 1. If the system has no TDM-BUS errors and is not handling heavy traffic, repeat the test at 1-minute intervals a maximum of 5 times.
1003	ABORT	The system could not allocate a Tone Detector for the test, the system is oversized for the number of Tone Detectors present, or some Tone Detectors are out-of-service. 1. Resolve any "TTR-LEV (TTR Level)" errors. 2. Resolve any "TONE-PT (Tone Generator)" errors. 3. If neither condition exists, retry the test at 1-minute intervals a maximum of 5 times.
1004	ABORT	The port has been seized by a user for a valid call. Use the **status station** command for the station associated with this port to determine whether the port is available for testing. 1. Retry the command at 1-minute intervals a maximum of 5 times.
2000	ABORT	Response to the test request was not received from the VC-BD circuit pack within the allowable time period. 1. If this result occurs repeatedly, reset the circuit pack if the other ports are not in use. Reset the circuit pack by issuing the **busyout board PCSS** and the **reset board PCSS** commands. 2. If this result occurs again, replace the circuit pack.
2012	ABORT	Internal system error
2100	ABORT	Could not allocate the necessary system resources to run this test.
2103	ABORT	The system could not make the conference connection for the test. 1. Retry the command at 1-minute intervals a maximum of 5 times.
0	FAIL	The TDM Loop Around Test failed.
1	FAIL	The Conference Circuit Test failed. 1. Replace circuit pack.
	PASS	The VC Summer Port Local TDM Loopback Test passed.

UDS1-BD (UDS1 Interface Circuit Pack)

MO Name (in Alarm Log)	Alarm Level	Initial Command to Run	Full Name of MO
UDS1-BD	MAJOR	test board PCSSpp sh	UDS1 Interface Circuit Pack
UDS1-BD	MINOR	test board PCSSpp l	UDS1 Interface Circuit Pack
UDS1-BD	WARNING	test board PCSSpp sh	UDS1 Interface Circuit Pack

The UDS1 Interface circuit pack provides an interface to the DS1 facility. UDS1 Interface circuit packs include the TN464B circuit pack and the TN464C circuit pack.

The TN464B circuit pack is designed to support 32 DS0 channels on a 2.048 Mbps DS1 link, and the TN464C (or greater vintage) circuit pack is designed to support either 24 DS0 channels on a 1.544 Mbps DS1 link or 32 DS0 channels on a 2.048 Mbps DS1 link. The TN464C (or greater vintage) circuit pack is optioned via a removable strap on the circuit pack. The 2 strap positions are labeled "24CHNL" or "32CHNL."

The DS0 channels can be administered either as trunks to other switches, lines to off-premises stations, ports to line-side PRI terminating devices, or as ports to other line-side non-PRI terminating devices.

NOTE:
DS0 channels on the TN464B circuit pack can be administered only as trunks to other switches.

UDS1 Interface Circuit Pack Maintenance documentation provides a strategy for maintaining the UDS1 Interface circuit pack. The maintenance strategy deals with logging the in-line errors reported by the UDS1 Interface circuit pack, running tests for error diagnosis and recovery, and raising or clearing maintenance alarms.

The TN464B and TN464C circuit packs support Tie trunks, CO trunks, DID trunks, OPS lines, narrowband access endpoint ports, the ISDN-PRI signaling channel (D-channel), and ISDN-PRI trunks (B-channels). The TN464C circuit pack can also support wideband access endpoint ports and PRI endpoint ports (B-channels).

The signaling (that is, the call setup) for the Tie trunks, CO trunks, DID trunks and OPS lines is done on the circuit pack by the UDS1 firmware. Signaling for the B-channels (ISDN-PRI trunks and PRI endpoint ports) is routed over the D-channel. ISDN-PRI Trunk and PRI endpoint port signaling (Q.921, Q.931), however, is not provided by the UDS1 Interface circuit pack. The signaling over the DS1 link must be synchronized between the transmitting end and the receiving end to ensure error-free communication. Refer to SYNC (Synchronization) Maintenance documentation for details.

Each trunk, line, and port has its own maintenance strategy. However, each trunk, line, or port is dependent upon the health of the UDS1 Interface circuit pack. Refer to the following sections for details: TIE-DS1 documentation for a DS1 Tie Trunk, CO-DS1 documentation for a DS1 CO Trunk, DID-DS1 documentation for a DS1 DID Trunk, OPS-LINE documentation for a DS1 OPS Line, WAE-PORT documentation for a Wideband Access Endpoint, ISDN-TRK documentation for a DS1 ISDN Trunk, PE-BCHL documentation for a PRI Endpoint Port, and ISDN-LNK documentation for an ISDN-PRI Signaling Link Port.

The TN464F (or later suffix) circuit pack combined with Lucent's new 120A1 CSU Module forms an Enhanced Integrated CSU. The new 120A1 CSU Module, when combined with the functionality provided by the TN464F hardware and firmware, and new switch software, provides functionality equivalent to an external stand-alone ESF T1 CSU. The 120A1 CSU Module connects to the TN464F circuit pack on the I/O connector panel on the back of the port carrier. The new CSU Module, thus becomes an integrated part of the DEFINITY. system. Throughout the document, the term 120A1 will mean a 120A1 or later suffix CSU Module.

The Enhanced Integrated CSU is for use in the United States of America with 1.544 Mbps DS1 service. For further details on the 120A1 CSU Module see *DEFINITY. Communications System Generic 1, Generic 2, and Generic 3 V1 and V2 - Integrated CSU Module Installation and Operation*, 555-230-193, Issue 1, December 1993.

The TN464F and 120A1 CSU Module support on-demand loopback tests that assist in the detection of faults between the TN464F circuit pack and the CSU Module, between the Integrated CSU and the optional Customer Premises Loopback Jack, or between the Integrated CSU and remote CSU. These loopback tests are explained in detail later in this UDS1-BD section, but Figure 3-34 gives a high level overview of the loopback points.

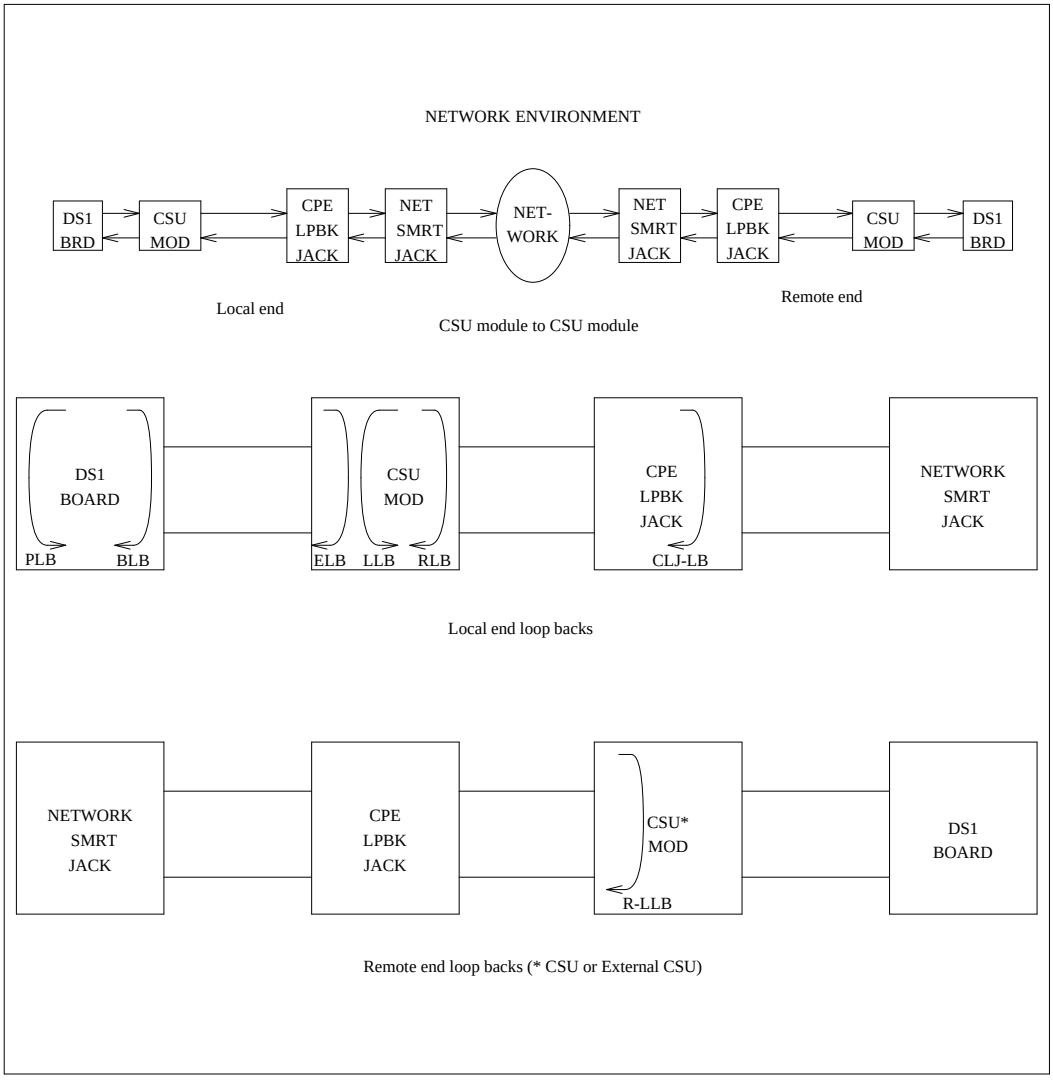

Figure 3-34. High Level Overview Of Loopback Points

Circuit Pack Administration and Options

The DS1 configuration for each circuit pack is administered on the DS1 Circuit Pack form. *Bit Rate* is set to 1.544 Mbps for 24-channel systems, and 2.048 Mbps for 32-channel systems. *Country Protocol* is used to drive layer 3 protocol decisions based on PRI specifications specific to a given country (not those related to specific features). This Country Protocol is independent of the *Country* parameter administered on the country-options system-parameters form.

Different UDS1 circuit packs may be administered with different Country Protocols, allowing the switch to act as a gateway between two incompatible ISDN-PRI implementations (for example, between two different countries). US systems use country protocol 1. `Near-End CSU Type` is set to *other* for no CSU installed, *or* for an external CSU such as an ESF T1 CSU, or *integrated* for the 120A1 CSU Module. Answering *integrated* will cause additional fields to be displayed for administering the Enhanced Integrated CSU Module. In addition to the above there are numerous other fields defining such parameters as framing modes, line coding companding mode and so on. For details, see *DEFINITY Communications System Generic 3 V2 Implementation,* 555-230-653, and *DEFINITY Communications System Generic 2.2 and Generic 3 V2 DS1/CEPT/ISDN-PRI Reference*, 555-025-107.

Figure 3-35 through Figure 3-37 show how to configure the circuit pack for 24-channel or 32-channel DS1. The channel selection must match the parameters administered on the corresponding DS1 Circuit Pack Form. (US applications use 24 Channels.)

The channel selection must match the parameters administered on the corresponding DS1 Circuit Pack Form. (US applications use 24 Channels.)

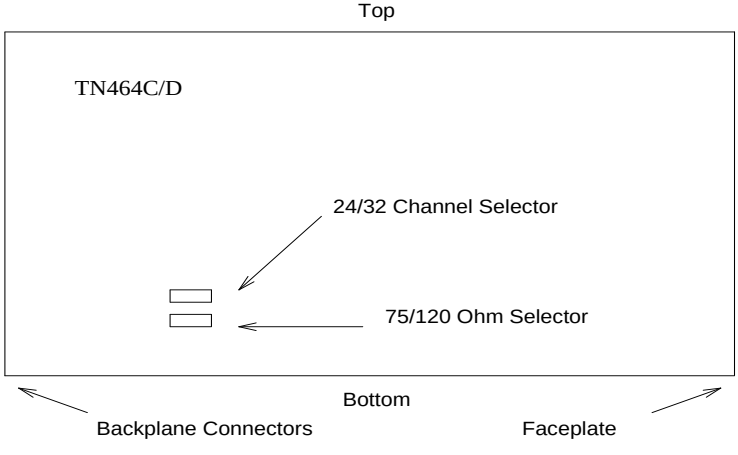

Figure 3-35. TN464C/D DS1 Option Jumpers

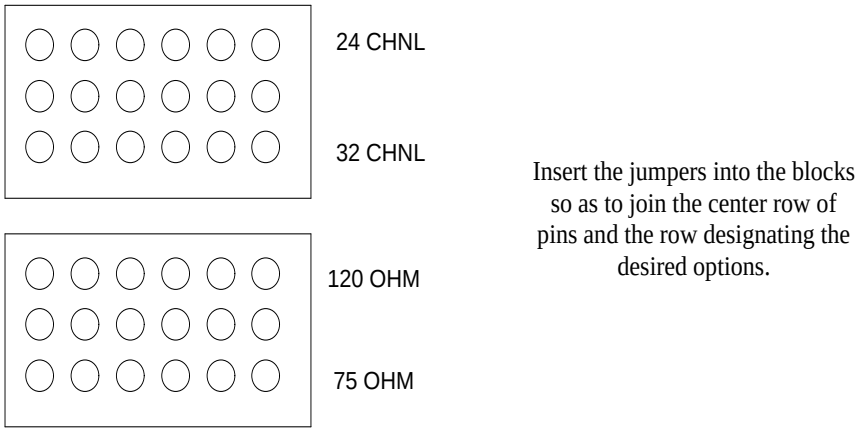

Figure 3-36. TN464C/D DS1 Option Jumpers

The option switch located on the component side of the TN464E/F circuit pack must be set correctly. Figure 3-37 shows how to configure the circuit pack for 24-channel or 32-channel DS1. The channel selection must match the parameters administered on the corresponding DS1 Circuit Pack Form. (US applications use 24 Channels.)

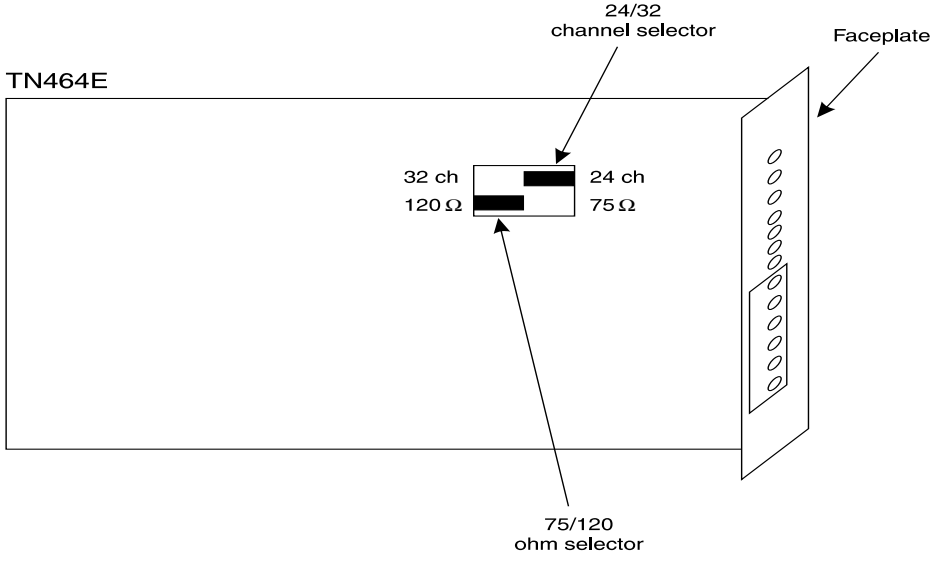

Figure 3-37. TN464E/F DS1 Option switches

Hardware Error Log Entries and Test to Clear Values

Table 3-358. DS1 Interface Circuit Pack Maintenance Error Log Entries

Error Type	Aux Data	Associated Test	Alarm Level	On/Off Board	Test to Clear Value
0[1]	0	Any	Any	Any	test board PCSS
1(a)	0	Circuit pack removed or SAKI Test (#53)	MIN/ WRN[2]	ON	
18(b)	0	busyout board PCSS	WARNING	OFF	release board PCSS
23(c)	0		WARNING	OFF	add ds1 PCSS
125(d)	none	None	MIN/ WRN[3]	ON	
257	65535	Control Channel Loop Test (#52)	MINOR	ON	test board PCSS l r 20
257(e)	Any	None			
513(f)	Any		MIN/ WRN[3]	ON	
514(g)	46086		MIN/ WRN[3]	ON	
769(h)	46085		MIN/ WRN[3]	ON	
770(i)	46096		MIN/ WRN[3]	ON	
1025(e)	4363	NPE Audit Test (#50)			
1281	Any	Loss of Signal Alarm Inquiry Test (#138)	MIN /WRN[3]	OFF	test board PCSS
1300(j)	Any	Loss Of Signal Alarm Inquiry Test (#138)	WARNING	OFF	test board PCSS
1301(k)	Any	Loss Of Signal Alarm Inquiry Test (#138)	WARNING	OFF	test board PCSS
1302(l)	Any	Loss Of Signal Alarm Inquiry Test (#138)	MIN/ WRN[3]	OFF	test board PCSS
1303(m)	Any	Loss Of Signal Alarm Inquiry Test (#138)	MIN/ WRN[3]	ON	test board PCSS

Continued on next page

Table 3-358. DS1 Interface Circuit Pack Maintenance Error Log Entries — *Continued*

Error Type	Aux Data	Associated Test	Alarm Level	On/Off Board	Test to Clear Value
1310(n)	Any	Board Loopback Test (#1209)	MINOR	ON	test ds1-loop PCSS ds1/csu-loopback-tests
1311(o)	Any	Equipment Loopback Test (#1210)	MIN/ WRN[3]	OFF	test ds1-loop PCSS ds1/csu-loopback-tests
1312(p)	Any	Repeater Loopback Test (#1211)	MIN/ WRN[3]	OFF	test ds1-loop PCSS ds1/csu-loopback-tests
1313(q)	Any	CPE Loopback Jack Test (#1212)	MIN/ WRN[3]	OFF	test ds1-loop PCSS end-loopback/span-test
1314(r)	Any	Far CSU Loopback Test (#1213)	MIN/ WRN[3]	OFF	test ds1-loop PCSS end-loopback/span-
1320	Any	Loss of Signal Alarm Inquiry Test (#138)	MIN/ WRN[3]	OFF	test board PCSS
1321	Any	Loss of Signal Alarm Inquiry Test (#138)	MIN/ WRN[3]	OFF	test board PCSS
1322	Any	Loss of Signal Alarm Inquiry Test (#138)	MINOR	ON	test board PCSS
1323	Any	Loss of Signal Alarm Inquiry Test (#138)	MIN/ WRN[3]	OFF	test board PCSS
1324	Any	Loss of Signal Alarm Inquiry Test (#138)	WARNING	OFF	test board PCSS
1537(s)	46082		MIN/ WRN[3]	ON	
1538(t)	Any		MIN/ WRN[3]	ON	
1793	Any	Blue Alarm Inquiry Test (#139)	MAJ/MIN/WRN[4]	OFF	test board PCSS
1794	Any	Blue Alarm Inquiry Test (#139)	MAJ/MIN/WRN[4]	OFF	test board PCSS
1795	Any	Blue Alarm Inquiry Test (#139)	MAJ/MIN/WRN[4]	OFF	test board PCSS
2049	Any	Red Alarm Inquiry Test (#140)	MIN/ WRN[3]	OFF	test board PCSS

Continued on next page

Table 3-358. DS1 Interface Circuit Pack Maintenance Error Log Entries — *Continued*

Error Type	Aux Data	Associated Test	Alarm Level	On/Off Board	Test to Clear Value
2305	Any	Yellow Alarm Inquiry Test (#141)	MIN/ WRN[3]	OFF	test board PCSS
2306	Any	Yellow Alarm Inquiry Test (#141)	MIN /WRN[3]	OFF	test Board PCSS
2561	Any	Major Alarm Inquiry Test (#142)	MIN /WRN[3]	OFF	test board PCSS
2817		Minor Alarm Inquiry Test (#143)	MIN/ WRN[3]	OFF	test board PCSS
3073 to 3160 (u)	Any	Slip Alarm Inquiry Test (#144)	MIN/ WRN[3]	OFF	test board PCSS r 6
3330(v)	46083		MIN/ WRN[3]	ON	
3585 to 3601 (w)	Any	Misframe Alarm Inquiry Test (#145)	MIN/ WRN[3]	OFF	test board PCSS r 6
3840(x)	Any	None			
3841(y)	4358				
3842(z)	46097				
3843	46081				
3900(aa)	Any	CPE Loopback Jack Test (#1212)			
3901(ab)	Any	Far CSU Loopback Test (#1213)			
3902(ac)	Any	One-Way Span Test (#1214)			
3999(ad)	Any	None			

1. Run the Short Test Sequence first. If all tests pass, run the Long Test Sequence. Refer to the appropriate test description and follow the recommended procedures.
2. If ports are assigned to the circuit pack, then a minor alarm is raised. If no ports are assigned to the circuit pack, then a warning alarm is raised. The alarm is raised after the circuit pack has been missing for a period of 15 minutes. Warning alarms are also raised against any ports administered on the circuit pack.
3. Minor alarms on this MO may be downgraded to warning alarms based on values set in the **set options** command.
4. Major alarms on this MO may be downgraded to minor or warning alarms based on values set in the **set options** command.

Notes:

a. Error 1 indicates that the circuit pack has totally stopped functioning or is not fully administered. The alarm is logged about 15 minutes after the circuit pack has been removed or 11 minutes after the SAKI Test (#53) fails.

   To be fully administered, a UDS1 circuit pack must meet all of these 3 conditions:

   1. Have an entry in the circuit plan via the **change circuit pack** command
   2. Be administered via the **add ds1** PCSS command
   3. Be physically inserted into the correct slot

   If the circuit pack has an entry in the circuit plan and either of the other two conditions are *not* met, a MINOR alarm is logged. To resolve the error either

   1. Make sure all conditions for administration are met and that a functioning UDS1 circuit pack is inserted in the correct slot, or
   2. Completely remove the UDS1-BD from the system using the following steps:
      a. Remove any administered DS1 trunks, access endpoints or PRI endpoints associated with the circuit pack from their trunk groups.
      b. Execute the **remove ds1** PCSS and **change circuit pack** PCSS commands.

   If all the administration conditions are met for this circuit pack and the red LED is still on, follow the instructions for LED Alarms with Error Type 1.

b. The UDS1 Interface circuit pack has been busied out by a **busyout board PCSS** command.

c. The UDS1-BD circuit pack is not completely administered. To be fully administered, the UDS1 circuit pack must:

   1. Have an entry in the circuit plan via the **change circuit pack** command,
   2. Be administered via the **add ds1** PCSS command, and
   3. Be physically inserted into the correct slot.

   A DS1 (UDS1-BD and DS1-BD) differs from most circuit packs in that inserting the circuit pack into the switch is not enough to make the board usable. It must also be administered with the **add ds1** command.

d. No Aux Data: A wrong circuit pack is inserted in the slot where this circuit pack is logically administered. To resolve this problem, either remove the wrong circuit pack and insert the logically administered circuit pack OR use the **change circuit-pack** command to readminister this slot to match the circuit pack inserted.

Aux Data 3: The 24/32-channel option jumper setting on the circuit pack does not match the option set on the DS1 circuit pack administration form. The circuit pack must be physically removed to see the setting of the jumper.

e. This error is associated with the Common Port Circuit Pack Maintenance Test. Refer to XXX-BD (Common Port Circuit Pack) Maintenance documentation for details.

f. The UDS1 Interface circuit pack has detected a transient hardware problem. The value in the Aux Data field indicates the type of hardware problem.

4352	External RAM failure
4353	Internal RAM failure
4355	Internal ROM failure

If the UDS1 board detects only one of these hardware problems, then the error will disappear when none of these faults are detected for 10 minutes. If the same Aux Data value is logged more than once in a 24 hour period, the circuit pack should be replaced.

g. LAN External RAM Error. This error occurs when there is a hardware fault in the PPE external RAM. The RAM is used for message buffering to and from the Packet Bus. This error should not occur regularly. If this error is seen quite frequently (10 times within 30 minutes), the circuit pack should be replaced.

h. Transmit FIFO Underflow Error. This error occurs when the circuit pack cannot find the "end of frame" bit when transmitting a frame to Packet Bus. An alarm will be raised if this error occurs 3 times within 10 minutes. Clear the alarm via the following commands: **busyout board PCSS**, **reset board PCSS**, **test board PCSS long**, **release board PCSS**. If the error recurs within 10 minutes, then replace the circuit pack.

i. Unable to Write LAN Translation RAM Error. This error occurs when a call is aborted because there are no available translation RAM locations for the call connection attempt. An alarm will be raised if this error occurs two times within 10 minutes. Clear the alarm via the following commands: **busyout board PCSS**, **reset board PCSS**, **test board PCSS long**, **release board PCSS**. If the error recurs within 10 minutes, then replace the circuit pack.

j. CSU Module missing. The *Near-End CSU Type* field on the *add ds1* form has been administered as *integrated* but the 120A CSU Module is not physically connected (or is improperly connected) to the TN464F board on the back of the port carrier.

If using the 120A CSU Module, plug (or replug) the CSU Module into the TN464F circuit pack's connector on the I/O connector panel on back of the carrier. Otherwise, change the *Near-End CSU Type* field using the *change ds1* form to *other*.

If this error remains after plugging the CSU Module into the board's connector, there could be a problem with the I/O connector panel.

k. CSU Module not expected. The 120A CSU Module is physically connected to the TN464F board on the back of the port carrier but the *Near-End CSU Type* field on the *add ds1* form has not been administered as *integrated*.

   If the 120A CSU Module is to be used, use the *change ds1* command to change the *Near-End CSU Type* field to *integrated*. Otherwise, physically remove the 120A CSU Module from the back of the port carrier.

l. DS1 configuration error. Attempting to use the 120A CSU Module with a TN464F circuit pack that is configured for 32-channel (2.048 Mbps) operation. The CSU Module only works with a DS1 board configured for 24-channel (1.544 Mbps) operation in the United States.

m. DS1 circuit pack suffix incorrect for CSU Module. The *Near-End CSU Type* field on the *add ds1* form has been administered as *integrated* but the DS1 circuit pack is not a TN464F or later suffix UDS1 board.

   If the 120A CSU Module is to be used, remove the circuit pack and replace it with a TN464F or later suffix board. Otherwise, use the ***change ds1*** command to change the *Near-End CSU Type* field to *other*.

n. BLB failure. This error occurs when the DS1 Board Loopback (BLB) demand test fails. Repeat the test using the following commands: ***busyout board PCSS***, ***test ds1-loop PCSS ds1/csu-loopback-tests***, ***release board PCSS***. If the BLB test continues to fail, then the TN464F circuit pack needs to be replaced.

o. ELB failure. This error occurs when the Integrated CSU (I-CSU) Module Equipment Loopback (ELB) test fails. This test is executed by the I-CSU during I-CSU power-up/reset (i.e.- TN464F board physically inserted and 120A CSU Module already installed) or when the 120A CSU Module is plugged on to an already initialized DS1 board. The ELB test is also executed as part of the command *test ds1-loop PCSS ds1/csu-loopback-tests*.

   Attempt to clear the alarm via the following commands: *busyout board PCSS*, *test ds1-loop PCSS ds1/csu-loopback-tests*, *release board PCSS*. If the ELB test continues to fail, then either the TN464F board, the CSU Module, or the I/O cable between the backplane and the CSU module (or any combination thereof) has failed. Attempt to isolate where the failure is occurring by reexecuting the test by replacing one piece of hardware at a time.

p. RLB failure. This error occurs when the Integrated CSU (I-CSU) Module Repeater Loopback (RLB) test fails. This test is executed by the I-CSU during I-CSU power-up/reset (i.e.- TN464F board physically inserted and 120A1 CSU Module already installed) or when the 120A CSU Module is plugged on to an already initialized DS1 board. The RLB test is also executed as part of the command *test ds1-loop PCSS ds1/csu-loopback-tests*.

Attempt to clear the alarm via the following commands: *busyout board PCSS*, *test ds1-loop PCSS ds1/csu-loopback-tests*, *release board PCSS*. If the RLB test continues to fail, then the CSU Module needs to be replaced.

q. CPE Loopback Jack deactivation error. This error occurs when the TN464F circuit pack could not deactivate a CPE Loopback Jack loopback on power-up/reset or upon software request.

   Attempt to clear the alarm via the following commands: *busyout board PCSS*, *test ds1-loop PCSS end-loopback/span-test*, *release board PCSS*. If the attempt to deactivate the CPE Loopback Jack loopback continues to fail, other steps must be taken to deactivate the loopback.

r. Far CSU Loopback deactivation error. This error occurs when the TN464F circuit pack could not deactivate a far-end CSU loopback on power-up/reset or upon software request.

   Attempt to clear the alarm via the following commands: *busyout board PCSS*, *test ds1-loop PCSS end-loopback/span-test*, *release board PCSS*. If the attempt to deactivate the Far CSU loopback continues to fail, then escalate the problem.

s. If the error occurs 3 times within 10 minutes, the board will be isolated from the Packet Bus and the board will be alarmed. To clear the alarm and restore the board to the Packet Bus, use the following commands: **busyout board PCSS**, **reset board PCSS**, **test board PCSS long**, **release board PCSS**.

   If the problem persists, and there are no PKT-BUS alarms or port alarms, then replace the circuit pack.

t. The hyperactive circuit pack is out-of-service and may exhibit one or more of the following symptoms:

   1. The common circuit pack level tests such as Test #50 and/or Test #52 are aborting with error code 2000.
   2. The tests run on the ports of this circuit pack are returning with a NO-BOARD.
   3. A busyout/release of the circuit pack has no affect on test results.
   4. A **list configuration** command shows that the circuit pack and ports are properly installed.

   The circuit pack is isolated from the system and all trunks or ports on this circuit pack are placed into the out-of-service state. The system will try to restore the circuit pack within 20-30 minutes. When no faults are detected for 20-30 minutes, the UDS1 Interface circuit pack is restored to normal operation. All trunks or ports of the UDS1 Interface circuit pack are then returned to the in-service state. If the board is not restored to normal operation, or the error recurs after the board was restored to normal operation, escalate the problem.

u. Only error 3073 will show that this board is receiving slips and the AUX data shows the last slip count that was reported.

v. These errors are not service-affecting. No action is required. These errors are reported by the circuit pack when it receives a bad control channel message from the switch. The auxiliary data identifies the following error events:

4096	Bad major heading
4097	Bad port number
4098	Bad data
4099	Bad sub-qualifier
4100	State inconsistency
4101	Bad logical link

w. Only error 3585 will show that this board is receiving misframes and the AUX data shows the last misframe count that was reported.

x. The UDS1 Interface circuit pack has detected a transient hardware logic error (for example, program logic inconsistency). This error will disappear when no faults are detected for 100 minutes. The value in Aux Data field indicates the type of hardware problem.

y. Bad Translation RAM Location Found Error. This error is not service-affecting. No action is required. A Bad Translation RAM is detected, but the call continues by using another translation location.

z. LAN Receive Parity Error. This error occurs when the circuit pack detects an error in a received frame from the TDM Bus. These errors are most likely caused by a TDM Bus problem, but may be due to a circuit pack fault.

aa. Error 3900 is used to give status information on a CPE Loopback Jack Test. The value in the Aux Data field indicates the status of the loopback test.

1 — Test is currently running.

2 — Test failed because loopback could not be activated.

3 — Test failed because test pattern could not be detected.

4 — Test has been terminated.

ab. Error 3901 is used to give status information on a Far CSU Loopback Test. The value in the Aux Data field indicates the status of the loopback test.

1 — Test is currently running.

2 — Test failed because loopback could not be activated.

3 — Test failed because test pattern could not be detected.

4 — Test has been terminated.

ac. Error 3902 is used to give status information on a One-Way Span Test. The value in the Aux Data field indicates the status of the span test.

1 — Test is currently running.

2 — Test has failed because test could not be activated.

3 — Test pattern was not received from the far end.

4 — Test has been terminated.

ad. Error type 3999 indicates that the circuit pack sent a large number of control channel messages to the switch within a short period of time. If error type 1538 is also present, then the circuit pack was taken out-of-service due to hyperactivity. If error type 1538 is not present, then the circuit pack has not been taken out-of-service, but it has generated 50% of the messages necessary to be considered hyperactive. This may be completely normal during heavy traffic periods. However, if this error type is logged when the circuit pack is being lightly used, it may indicate a problem with the circuit pack or the equipment attached to it.

System Technician-Demanded Tests: Descriptions and Error Codes

Always investigate tests in the order they are presented in the table below when inspecting errors in the system. By clearing error codes associated with the *NPE Connection Audit Test,* for example, you may also clear errors generated from other tests in the testing sequence.

Table 3-359. System Technician-Demanded Tests: UDS1-BD

Order of Investigation	Short Test Sequence	Long Test Sequence	Reset Board Sequence	test ds1-loop Command	D/ND[1]
NPE Connection Audit Test (#50)		X			ND
Control Channel Loop Test (#52)		X			ND
Loss of Signal Alarm Inquiry Test (#138)	X	X			ND
Blue Alarm Inquiry Test (#139)	X	X			ND
Red Alarm Inquiry Test (#140)	X	X			ND
Yellow Alarm Inquiry Test (#141)	X	X			ND

Continued on next page

Table 3-359. System Technician-Demanded Tests: UDS1-BD — *Continued*

Order of Investigation	Short Test Sequence	Long Test Sequence	Reset Board Sequence	test ds1-loop Command	D/ND[1]
Major Alarm Inquiry Test (#142)	X	X			ND
Minor Alarm Inquiry Test (#143)	X	X			ND
Slip Alarm Inquiry Test (#144)	X	X			ND
Misframe Alarm Inquiry Test (#145)	X	X			ND
Translation Update Test (#146)	X	X			ND
ICSU Status LEDs Test (#1227)	X	X			ND
SAKI Sanity Test (#53)			X		D
Internal Loop Around Test (#135)			X		D
DS1/CSU Loopback Tests					
DS1 Board Loopback Test (#1209)				X	D
CSU Equipment Loopback Test (#1210)				X	D
CSU Repeater Loopback Test (#1211)				X	D
CPE Loopback Jack Test (#1212)				X	D
Far CSU Loopback Test (#1213)				X	D
One-Way Span Test (#1214)				X	D
Inject Single Bit Error (#1215)				X	D
End Loopback/Span Test (#1216)				X	D

1. D = Destructive; ND = Nondestructive

NPE Connection Audit Test (#50)

The system sends a message to the on-board microprocessor to update the network connectivity translation for the SCOTCH-NPE chip on the circuit pack.

Table 3-360. TEST #50 NPE Connection Audit Test

Error Code	Test Result	Description/ Recommendation
None 2100	ABORT	System resources required for this test are not available. 1. Retry the command at 1-minute intervals a maximum of 5 times.
1019	ABORT	The test aborted because a test was already running on the port. 1. Retry the command at 1-minute intervals for a maximum of 5 times.
	FAIL	Internal System Error 1. Retry the command at 1-minute intervals a maximum of 5 times.
	PASS	The circuit pack's SCOTCH-NPE chip have been updated with its translation.
0	NO BOARD	The test could not relate the internal ID to the port (no board). This could be due to incorrect translations, no board is inserted, an incorrect board is inserted, or an insane board is inserted. 1. Ensure that the board translations are correct. Execute the **add ds1 PCSS** command to administer the UDS1 interface if it is not already administered. 2. If the board was already administered correctly, check the error log to determine whether the board is hyperactive. If this is the case, the board is shut down. Reseating the board will re-initialize the board. 3. If the board was found to be correctly inserted in step 1, then issue the **busyout board** command. 4. Issue the **reset board** command. 5. Issue the **release busy board** command. 6. Issue the **test board long** command. This should re-establish the linkage between the internal ID and the port.

Control Channel Loop Around Test (#52)

This test queries the circuit pack for its circuit pack code and vintage and verifies its records.

Table 3-361. TEST #52 Control Channel Loop Around Test

Error Code	Test Result	Description/ Recommendation
None 2100	ABORT	System resources required for this test are not available. 1. Retry the command at 1-minute intervals a maximum of 5 times.
	FAIL	The circuit pack failed to return the circuit pack code or vintage. 1. Retry the command a maximum of 5 times. 2. If the problem continues, and if the circuit pack is one of the Port circuit packs, replace the circuit pack. 3. Retry the command a few times a maximum of 5 times.
	PASS	Communication with this circuit pack is successful.
0	NO BOARD	The test could not relate the internal ID to the port (no board). This could be due to incorrect translations, no board is inserted, an incorrect board is inserted, or an insane board is inserted. 1. Ensure that the board translations are correct. Execute the **add ds1 PCSS** command to administer the UDS1 interface if it is not already administered. 2. If the board was already administered correctly, check the error log to determine whether the board is hyperactive. If this is the case, the board is shut down. Reseating the board will re-initialize the board. 3. If the board was found to be correctly inserted in step 1, then issue the **busyout board** command. 4. Issue the **reset board** command. 5. Issue the **release busy board** command. 6. Issue the **test board long** command. This should re-establish the linkage between the internal ID and the port.

SAKI Sanity Test (#53)

This test is destructive.

This test resets the circuit pack. The test is highly destructive and can only be initiated by a system technician-demanded **reset board PCSS** command.

Table 3-362. TEST #53 SAKI Sanity Test

Error Code	Test Result	Description/ Recommendation
None	ABORT	System resources required for this test are not available. 1. Retry the **reset board** command at 1-minute intervals a maximum of 5 times.
1005	ABORT	Wrong circuit pack configuration to run this test. This error applies only to DS1 Interface circuit packs. It means the DS1 Interface circuit pack is providing timing for the system and, therefore, it cannot be reset without major system disruptions. 1. If the circuit pack needs to be reset, then set synchronization to another DS1 Interface circuit pack or to the Tone-Clock circuit pack and try again. Refer to SYNC (Synchronization) Maintenance documentation.
1015	ABORT	Port is not out-of-service. 1. Busyout the circuit pack. 2. Execute the **reset board** command again.
2100	ABORT	System resources required for this test are not available. 1. Retry the **reset board** command at 1-minute intervals a maximum of 5 times.
1 2	FAIL FAIL	The circuit pack failed to reset. The circuit pack failed to restart. 1. Execute the **reset board** command again. 2. If the problem persists, replace the circuit pack.
	PASS	The circuit pack initializes correctly. 1. Run the Short Test Sequence.

Continued on next page

Table 3-362. TEST #53 SAKI Sanity Test — *Continued*

Error Code	Test Result	Description/ Recommendation
0	NO BOARD	The test could not relate the internal ID to the port (no board). This could be due to incorrect translations, no board is inserted, an incorrect board is inserted, or an insane board is inserted. 1. Ensure that the board translations are correct. Execute the **add ds1 PCSS** command to administer the UDS1 interface if it is not already administered. 2. If the board was already administered correctly, check the error log to determine whether the board is hyperactive. If this is the case, the board is shut down. Reseating the board will re-initialize the board. 3. If the board was found to be correctly inserted in step 1, then issue the **busyout board** command. 4. Issue the **reset board** command. 5. Issue the **release busy board** command. 6. Issue the **test board long** command. This should re-establish the linkage between the internal ID and the port.

Internal Loop Around Test (#135)

This test is destructive.

The Internal Loop Around Test is run by looping the transmitted DS1 bit stream back into the UDS1's board receiver. The loop occurs just before the DS1 facility interface. The test is highly destructive and can only be initiated by a system technician-demanded **reset board PCSS** command.

All trunks or ports on the UDS1 Interface circuit pack must be busied out via the system technician **busyout board** command before running the Internal Loop Around Test. When the Internal Loop Around Test is initiated, maintenance software sends appropriate messages to the UDS1 Interface circuit pack to start the test. The test uses the Tone Generator and Tone Detector to exercise a bit pattern consistency test for all ports. If the transmitted and received bit patterns on a trunk or port are different, the test fails.

When the test is complete, the maintenance software sends a stop loop around message to the UDS1 Interface circuit pack to put the circuit pack back into the normal operation mode. All trunks or ports of the UDS1 Interface circuit pack are restored to the in-service state after the **release board** command is entered.

Table 3-363. TEST #135 Internal Loop Around Test

Error Code	Test Result	Description/ Recommendation
2012	ABORT	Internal System Error 1. Retry the **reset board** command at 1-minute intervals a maximum of 5 times.
1002	ABORT	The system could not allocate time slots for the test. The system may be under heavy traffic conditions or it may have time slots out-of-service due to TDM-BUS errors. Refer to TDM-BUS Maintenance documentation to diagnose any active TDM-BUS errors. 1. If system has no TDM-BUS errors and is not handling heavy traffic, repeat test at 1-minute intervals a maximum of 5 times.
1003	ABORT	The system could not allocate a tone receiver for the test. The system may be oversized for the number of Tone Detectors present or some Tone Detectors may be out-of-service. 1. Look for TTR-LEV errors in the Error Log. If present, refer to TTR-LEV (TTR Level) Maintenance documentation. 2. Look for TONE-PT errors in the Error Log. If present, refer to TONE-PT (Tone Generator) Maintenance documentation. 3. If neither condition exists, retry the **reset board** command at 1-minute intervals a maximum of 5 times.
1004	ABORT	Received an incoming call on a port of the UDS1 circuit pack during the test. 1. Enter the **busyout board PCSS** command to put all trunks or ports of the UDS1 Interface circuit pack to out-of-service state. 2. Retry the **reset board** command at 1-minute intervals a maximum of 5 times.
1015	ABORT	Ports on the UDS1 Interface circuit pack have not been busied out to out-of-service. 1. Enter the **busyout board PCSS** command to put all trunks or ports of the UDS1 Interface circuit pack into the out-of-service state. 2. Retry the **reset board** command.

Continued on next page

Table 3-363. TEST #135 Internal Loop Around Test — *Continued*

Error Code	Test Result	Description/ Recommendation
1039	ABORT	The UDS1 Interface circuit pack is providing timing for the system. Executing this test could cause major system disruption. If the UDS1 Interface circuit pack needs to be tested, set the synchronization reference to another DS1 Interface circuit pack or to the Tone-Clock circuit pack via the following command sequence: 1. Issue the **disable synchronization-switch** command. 2. Next, issue the **set synchronization PCSS** command. 3. Issue the **enable synchronization-switch** command. Then rerun the test. If the test aborts again, a different ABORT error code will be generated. Follow the recommended maintenance procedures for that error code.
2000	ABORT	Response to the test request was not received within the allowable time period. If Error Type 1538 is present in the Error Log, follow the maintenance strategy recommended for this error type.
2100	ABORT	Could not allocate the necessary system resources to run this test. 1. Retry the **reset board** command at 1-minute intervals for a maximum of 5 times.
	FAIL	The UDS1 Interface circuit pack failed in the Internal Loop Around Test. If the UDS1 connects to a T1 network facility or another switch: 1. Retry the **reset board** command at 1-minute intervals a maximum of 5 times. 2. Enter the **list measurement ds1-log PCSS** command to read the error seconds measurement. 3. Verify that both endpoints of the DS1 link are administered using the same signaling mode, framing mode, and line coding. 4. Check the physical connectivity of DS1 Interface circuit packs and cable. 5. Replace the local UDS1 Interface circuit pack and repeat the test. 6. Contact T1 Network Service to diagnose the remote DS1 endpoint.*More information continues on the next page.*

Continued on next page

Table 3-363. TEST #135 Internal Loop Around Test — *Continued*

Error Code	Test Result	Description/ Recommendation
	FAIL *(cont'd.)*	If the UDS1 connects to a line-side terminating device such as a PRI terminal adapter: 1. Retry the **reset board** command at 1-minute intervals a maximum of 5 times. 2. Enter the **list measurement ds1-log PCSS** command to read the error seconds measurement. 3. Verify that the switch DS1 and the line-side terminating device are administered using the same signaling mode, framing mode, and line coding. 4. Investigate the maintenance status of the line-side terminating device. Obtain the error seconds measurement on the terminating device (if possible). Refer to the line-side terminating device operating manual for information. 5. Check the physical connection of the UDS1 Interface circuit pack to the terminating device. Check premise distribution system (or intra-premise wiring) for physical connection failures. If the error seconds measurement is severe, investigate premise distribution system wiring for noise and distance limitation. 6. Replace the local UDS1 Interface circuit pack and repeat the test. 7. Contact the vendor of the line-side terminating device to diagnose the equipment.
	PASS	All administered trunks or ports of the UDS1 Interface circuit pack pass the Internal Loop Around Test. The bit pattern consistency test is executed successfully over the path that covers a DS1 port, cable, and the external NCTE device.

Continued on next page

Table 3-363. TEST #135 Internal Loop Around Test — *Continued*

Error Code	Test Result	Description/ Recommendation
0	NO BOARD	The test could not relate the internal ID to the port (no board). This could be due to incorrect translations, no board is inserted, an incorrect board is inserted, or an insane board is inserted. 1. Ensure that the board translations are correct. Execute the **add ds1 PCSS** command to administer the UDS1 interface if it is not already administered. 2. If the board was already administered correctly, check the error log to determine whether the board is hyperactive. If this is the case, the board is shut down. Reseating the board will re-initialize the board. 3. If the board was found to be correctly inserted in step 1, then issue the **busyout board** command. 4. Issue the **reset board** command. 5. Issue the **release busy board** command. 6. Issue the **test board long** command. This should re-establish the linkage between the internal ID and the port.

Loss of Signal Alarm Inquiry Test (#138)

This test verifies the synchronization status and continuity of the DS1 link. The Loss of Signal alarm indicates that the UDS1 Interface circuit pack is unable to derive the synchronization clock from the DS1 facility. When the UDS1 Interface circuit pack detects a Loss of Signal alarm, it stops providing the synchronization clock for the system if it is administered as a timing source and transmits a Yellow alarm to the remote DS1 endpoint.

When the Loss of Signal alarm is confirmed, the maintenance software places all trunks or ports of the UDS1 Interface circuit pack into the out-of-service state. The inquiry test will run every 10 minutes until the loss of signal has been restored.

The UDS1 Interface circuit pack raises a Loss of Signal alarm after the signal has been lost for about 3 seconds. It will not retire the alarm until the signal has returned for about 10 seconds.

This test is also used to maintain the 120A CSU Module. This CSU Module, when combined with the functionality provided by the TN464F circuit pack, provides functionality equivalent to an external stand-alone ESF T1 CSU. The 120A2 CSU Module is known as an Enhanced Integrated CSU (I-CSU).

If a TN464F circuit pack detects certain I-CSU hardware errors, it will notify maintenance. When the maintenance subsystem receives notification of the I-CSU error, it will execute this Loss of Signal Inquiry test. The test, in addition to querying for a Loss Of Signal alarm condition, will also query the TN464F board to confirm the I-CSU error. A Minor or Warning alarm will be raised depending on the severity of the I-CSU error. The trunks on the board may be taken out of service if the I-CSU error is deemed serious.

If a Loss Of Signal alarm and an I-CSU error co-exist, the Loss Of Signal alarm condition will take priority and the board and all trunks on the board will be put in the out-of-service state. Errors will be logged, however, for both.

When the maintenance subsystem receives notification that the I-CSU hardware error condition no longer exists, maintenance will restore the board and all trunks to their previous service state if the alarm can be cleared (no other I-CSU errors or Loss Of Signal alarm exist).

Table 3-364. TEST #138 Loss of Signal Alarm Inquiry Test

Error Code	Test Result	Description/ Recommendation
	ABORT	Internal System Error 1. Retry the command at 1-minute intervals a maximum of 5 times.
2000	ABORT	Response to the test was not received within the allowable time period. This may be due to hyperactivity. Error type 1538 in the error log indicates hyperactivity. The hyperactive circuit pack is out of service and one or more of the following symptoms may be exhibited. 1. The UDS1-BD tests (such as test 138 and test 139) are aborting with error code 2000. 2. The tests run on the ports of this circuit pack are returning a no board result. 3. A **busyout** or a **release** command has no affect on the test results. 4. A **list config** command shows that the circuit pack and the ports are properly installed. When hyperactivity occurs, the circuit pack is isolated from the system, and all of the trunks for this circuit pack are placed into the out of service state. The system will try to restore the circuit pack within 15 minutes. When no faults are detected for 15 minutes, the UDS1 interface circuit pack is restored to normal operation. All of the trunks for the UDS1 interface circuit pack are then returned to the in service state. Hyperactivity is often caused by the associated facility. In such a case, faults (such as slips, misframes, or blue alarms) would be entered in the error log. In addition, many hardware errors would be logged against the associated trunk circuits. If the facility is OK and the error occurs again after 15 minutes, replace the circuit pack.

Continued on next page

Table 3-364. TEST #138 Loss of Signal Alarm Inquiry Test — *Continued*

Error Code	Test Result	Description/ Recommendation
2100	ABORT	Could not allocate the necessary system resources to run this test. 1. Retry the command at 1-minute intervals for a maximum of 5 times.
	FAIL	UDS1 Interface circuit pack detects a Loss of Signal alarm. The physical link is broken or the remote DS1 endpoint is down. All trunks or ports of this UDS1 interface circuit pack are out-of-service. If the UDS1 Interface circuit pack is designated as the supplier of the system synchronization source, then the system synchronization maintenance will adopt a source elsewhere. Refer to the SYNC section in this chapter for details. If the UDS1 connects to a T1 network facility: 1. Check the physical connection of the UDS1 Interface circuit pack and the cable. If a 120A1 CSU Module is physically connected to a TN464F board on the back of the port carrier, check the physical connection of the CSU Module and make sure the Network Interface cable is plugged into the CSU Module's NETWORK jack. 2. If the UDS1 Interface circuit pack connects to a T1 facility, call the vendor of the T1 carrier to diagnose the remote DS1 endpoint. If the UDS1 Interface circuit pack connects directly to a switch, call the system technician of the remote switch to diagnose the DS1 endpoint. If the UDS1 connects to a line-side terminating device such as a PRI terminal adapter: 1. Check the physical connection of the UDS1 Interface circuit pack to the terminating device. Check premise distribution system (or intra-premise wiring) for physical connection failures. If a 120A1 CSU Module is physically connected to a TN464F board on the back of the port carrier, check the physical connection of the CSU Module and make sure the Network Interface cable is plugged into the CSU Module's NETWORK jack. 2. Contact the vendor of the line-side terminating device to diagnose the equipment.
1300		The CSU Module is missing. The `Near-End CSU Type` field on the **add ds1** form has been administered as **integrated** but the 120A1 CSU Module is not physically connected to the TN464F board on the back of the port carrier. 1. If using the 120A1 CSU Module, plug the CSU Module into the TN464F circuit pack's connector on the I/O connector panel on back of the carrier. Otherwise, change the `Near-End CSU Type` field using the **change ds1** form to **other**. 2. Run the test again.

Continued on next page

Table 3-364. TEST #138 Loss of Signal Alarm Inquiry Test — *Continued*

Error Code	Test Result	Description/ Recommendation
1301	FAIL	The 120A1 CSU Module is physically connected to the TN464F board on the back of the port carrier but the `Near-End CSU Type` field on the **add ds1** form has not been administered as **integrated**. 1. If the 120A1 CSU Module is to be used, use the c**hange ds1** command to change the `Near-End CSU Type` field to **integrated**. Otherwise, physically remove the 120A1 CSU Module from the back of the port carrier. 2. Run the test again.
1302	FAIL	Attempting to use the 120A1 CSU Module with a TN464F circuit pack that is configured for 32-channel (2.048 Mbps) operation. The CSU Module only works with a DS1 board configured for 24-channel (1.544 Mbps) operation in the United States of America. 1. If the 120A1 CSU Module is to be used, physically remove the TN464F circuit pack and reconfigure for 24-channel (1.544 Mbps) operation. 2. Reinsert the circuit pack and run the test again.
1303	FAIL	The DS1 circuit pack Suffix is incorrect for CSU Module administration. The `Near-End CSU Type` field on the **add ds**1 form has been administered as **integrated**, but the DS1 circuit pack is not a TN464F or later suffix UDS1 board. 1. If the CSU Module is to be used, and the `Near-End CSU Type` field is set to **intergrated** to allow for CSU Module administration, remove the circuit pack and replace with a TN464F or later suffix board. Otherwise, use the **change ds1** command to change the `Near-End CSU Type` field to **other**.
1310	FAIL	The DS1 Board Loopback (BLB) demand test (#1209) failed. 1. Repeat the test using the **test ds1-loop PCSS ds1/csu-loopback-tests** command. 2. If the BLB test continues to fail, then replace the TN464F circuit pack. 3. Run this test again.

Continued on next page

Table 3-364. TEST #138 Loss of Signal Alarm Inquiry Test — *Continued*

Error Code	Test Result	Description/ Recommendation
1311	FAIL	The Integrated CSU (I-CSU) Module Equipment Loopback (ELB) test (#1210) failed. This test is executed by the I-CSU during I-CSU power-up/reset (i.e.- TN464F board physically inserted and 120A1 CSU Module already installed) or when the 120A1 CSU Module is plugged on to an already initialized DS1 board. The ELB test is also executed as part of the command **test ds1-loop PCSS ds1/csu-loopback-tests**. 1. Execute the **test ds1-loop PCSS ds1/csu-loopback-tests** command. 2. If the ELB test continues to fail, then either the TN464F board, the CSU Module, or the I/O cable between the backplane and the CSU module (or any combination thereof) has failed. Attempt to isolate the problem to one of these areas. Begin by replacing the CSU Module and running the **test ds1-loop PCSS ds1/csu-loopback-tests** command again. 3. If the ELB test continues to fail, then replace the TN464F board and run the **test ds1-loop PCSS ds1/csu-loopback-tests** command again. 4. If the ELB test continues to fail, the problem could be in the I/O cable between the backplane and the CSU module.
1312	FAIL	The Integrated CSU (I-CSU) Module Repeater Loopback (RLB) test (#1211) failed. This test is executed by the I-CSU during I-CSU power-up/reset (i.e.- TN464F board physically inserted and 120A1 CSU Module already installed) or when the 120A1 CSU Module is plugged on to an already initialized DS1 board. The RLB test is also executed as part of the command **test ds1-loop PCSS ds1/csu-loopback-tests**. 1. Execute the **test ds1-loop PCSS ds1/csu-loopback-tests** command. 2. If the RLB test continues to fail, then replace the CSU Module. 3. Run this test again.
1313	FAIL	The TN464F circuit pack could not deactivate a CPE Loopback Jack loopback. 1. Execute the **test ds1-loop PCSS end-loopback/span-test** command. 2. If the attempt to deactivate the CPE Loopback Jack loopback is not successful, check the cabling and investigate the problem at the CPE Loopback Jack. 3. Run the test again.
1314	FAIL	The TN464F circuit pack could not deactivate a far-end CSU loopback. 1. Execute the **test ds1-loop PCSS end-loopback/span-test** command. 2. If the attempt to deactivate the far-end CSU loopback continues to fail, then escalate the problem.

Continued on next page

Table 3-364. TEST #138 Loss of Signal Alarm Inquiry Test — *Continued*

Error Code	Test Result	Description/ Recommendation
1320	FAIL	A 120A1 CSU module hardware failure or an ICSU serial interface audit failure was detected by the TN464F UDS1 circuit pack. 1. Replace the CSU module, and then run the test again. 2. If the test continues to fail with this error code, replace the TN464F and run the test again. 3. If the test continues to fail with this error code, then the problem could be in the I/O cable between the backplane and the CSU module.
1321	FAIL	DTE LOS (loss of signal) was detected between the TN464F UDS1 board and the 120A1 CSU Module. Either the TN464F board, the 120A1 CSU Module, or the I/O cable between the backplane and the CSU module (or any combination thereof) has failed. Attempt to isolate the problem to one of these areas. 1. Replace the CSU Module and run the test again. 2. If the test continues to fail with this error code, then replace the TN464F board and run the test again. 3. If the test continues to fail with this error code, the problem could be in the I/O cable between the backplane and the CSU module.
1322	FAIL	No 5 volts power detected from the TN464F circuit pack to the 120A1 CSU Module. Problem probably due to an open fuse on the DS1 board or a faulty ICSU. **NOTE:** Do not immediately swap DS1 boards as this may blow the fuse on the new board. 1. If the test continues to fail with this error code, then replace the CSU Module and run the test again. 2. Remove the TN464F from the system and reinsert. 3. Run the test again once the board has finished its reset. 4. If the test continues to fail with this error code, then replace the TN464F board and run the test again. 5. If the test continues to fail with this error code, the problem could be in the I/O cable between the backplane and the CSU module.
1323	FAIL	A service affecting CSU Module audit failure was detected by the TN464F UDS1 circuit pack. All administered ports on the UDS1 circuit pack are affected and maintenance software will place the ports into the out-of-service state. 1. Replace the 120A1 CSU Module.

Continued on next page

Table 3-364. TEST #138 Loss of Signal Alarm Inquiry Test — *Continued*

Error Code	Test Result	Description/ Recommendation
1324	FAIL	A non-service affecting CSU Module audit failure was detected by the TN464F UDS1 circuit pack. No ports should be affected. No immediate action is required. These errors indicate that the CSU Module hardware may have a problem, and that it should be replaced when practical to avoid further deterioration.
	PASS	DS1 signal is present and the physical link is healthy. In addition, no Integrated CSU errors are detected.
0	NO BOARD	The test could not relate the internal ID to the port (no board). This could be due to incorrect translations, no board is inserted, an incorrect board is inserted, or an insane board is inserted. 1. Ensure that the board translations are correct. Execute the **add ds1 PCSS** command to administer the UDS1 interface if it is not already administered. 2. If the board was already administered correctly, check the error log to determine whether the board is hyperactive. If this is the case, the board is shut down. Reseating the board will re-initialize the board. 3. If the board was found to be correctly inserted in step 1, then issue the **busyout board** command. 4. Issue the **reset board** command. 5. Issue the **release busy board** command. 6. Issue the **test board long** command. This should re-establish the linkage between the internal ID and the port.

Blue Alarm Inquiry Test (#139)

The Blue Alarm is a signal sent by the remote DS1 endpoint when it is out-of-service. The Blue Alarm Inquiry Test checks the blue alarm status of the remote DS1 endpoint.

When the UDS1 Interface circuit pack detects a Blue Alarm signal from the remote DS1 endpoint, the circuit pack will transmit a Yellow alarm to the remote DS1 endpoint and send a BLUE ALARM message to the maintenance software. When the Blue alarm is confirmed, the maintenance software places all trunks or ports of the UDS1 Interface circuit pack into the out-of-service state. The inquiry test will be run every 10 minutes until the Blue alarm is cleared.

The UDS1 Interface circuit pack takes 3 seconds to recognize and report a Blue alarm and 16 seconds to recognize and report the resolution of a Blue alarm. When the Blue alarm is cleared, the UDS1 Interface circuit pack stops

transmitting the Yellow alarm and places the trunks or ports back into the service state before the Blue alarm occurs.

Line Loopback Alarm

The Line Loopback (LLB) is used by the remote DS1 endpoint to put the switch DS1 into a loopback mode. When the switch DS1 is in the LLB mode, the arriving bit pattern is regenerated and sent back. Line Loopback (LLB) Alarm is activated when the in-band activate LLB bit pattern has been arriving continuously for 5 seconds on the DS1 line. LLB is deactivated when the in-band deactivate LLB bit pattern has been arriving continuously for 5 seconds on the DS1 line.

Since LLB is a maintenance condition rendering all DS0 channels unavailable for signaling or bearer traffic, maintenance software treats this the same as a Blue Alarm.

Payload Loopback Alarm

The Payload Loopback (PLB) is used by the remote DS1 endpoint to put the switch DS1 into a loopback mode. PLB Alarm is activated when a network protocol activate bit pattern arrives over the 4Kbps ESF data link on the DS1 line. PLB is deactivated when a network protocol deactivate bit pattern arrives over the 4Kbps ESF data link on the DS1 line.

Since PLB is a maintenance condition rendering all DS0 channels unavailable for signaling or bearer traffic, maintenance software treats this the same as a Blue Alarm.

Table 3-365. TEST #139 Blue Alarm Inquiry Test

Error Code	Test Result	Description/ Recommendation
	ABORT	Internal System Error 1. Retry the command at 1-minute intervals a maximum of 5 times.

Continued on next page

Table 3-365. TEST #139 Blue Alarm Inquiry Test — *Continued*

Error Code	Test Result	Description/ Recommendation
2000	ABORT	Response to the test was not received within the allowable time period. This may be due to hyperactivity. Error type 1538 in the error log indicates hyperactivity. The hyperactive circuit pack is out of service and one or more of the following symptoms may be exhibited. 1. The UDS1-BD tests (such as test 138 and test 139) are aborting with error code 2000. 2. The tests run on the ports of this circuit pack are returning a no board result. 3. A **busyout** or a **release** command has no affect on the test results. 4. A **list config** command shows that the circuit pack and the ports are properly installed. When hyperactivity occurs, the circuit pack is isolated from the system, and all of the trunks for this circuit pack are placed into the out of service state. The system will try to restore the circuit pack within 15 minutes. When no faults are detected for 15 minutes, the UDS1 interface circuit pack is restored to normal operation. All of the trunks for the UDS1 interface circuit pack are then returned to the in service state. Hyperactivity is often caused by the associated facility. In such a case, faults (such as slips, misframes, or blue alarms) would be entered in the error log. In addition, many hardware errors would be logged against the associated trunk circuits. If the facility is OK and the error occurs again after 15 minutes, replace the circuit pack.
2100	ABORT	Could not allocate the necessary system resources to run this test. 1. Retry the command at 1-minute intervals for a maximum of 5 times.
	FAIL	The remote DS1 endpoint is out-of-service.
1 1794	FAIL	The UDS1 Interface circuit pack detects a Line Loopback Alarm (LLB). If the UDS1 interface circuit pack connects to a T1 facility, call the vendor of the T1 carrier to diagnose the remote DS1 endpoint. If the UDS1 interface circuit pack connects directly to a switch, call the system technician of the remote switch to diagnose the DS1 endpoint. If the UDS1 interface circuit pack connects directly to a line-side terminating device (for example, a PRI terminal adapter), call the vendor of the terminating device to diagnose the equipment.

Continued on next page

Table 3-365. TEST #139 Blue Alarm Inquiry Test — *Continued*

Error Code	Test Result	Description/ Recommendation
1795	FAIL	The UDS1 Interface circuit pack detects a Payload Loopback Alarm (PLB). If the UDS1 Interface circuit pack connects to a leased T1 facility, call the vendor of the T1 carrier to diagnose the remote DS1 endpoint. If the UDS1 Interface circuit pack connects directly to another DS1 board, call the system technician of the remote switch to diagnose the DS1 endpoint. If the UDS1 Interface circuit pack connects directly to a line-side terminating device such as a PRI terminal adapter contact the vendor of the terminating device to diagnose the equipment.
	PASS	Remote DS1 endpoint is in-service. Neither a Blue alarm nor a Line Loopback alarm nor a Payload Loopback alarm is detected by the UDS1 Interface circuit pack.
0	NO BOARD	The test could not relate the internal ID to the port (no board). This could be due to incorrect translations, no board is inserted, an incorrect board is inserted, or an insane board is inserted. 1. Ensure that the board translations are correct. Execute the **add ds1 PCSS** command to administer the UDS1 interface if it is not already administered. 2. If the board was already administered correctly, check the error log to determine whether the board is hyperactive. If this is the case, the board is shut down. Reseating the board will re-initialize the board. 3. If the board was found to be correctly inserted in step 1, then issue the **busyout board** command. 4. Issue the **reset board** command. 5. Issue the **release busy board** command. 6. Issue the **test board long** command. This should re-establish the linkage between the internal ID and the port.

Red Alarm Inquiry Test (#140)

A UDS1 Interface circuit pack raises a Red alarm when the framing pattern of the incoming DS1 bit stream has been lost. The Red Alarm Inquiry Test checks the framing status of a UDS1 Interface circuit pack. A UDS1 Interface circuit pack takes 3 seconds to recognize and report a Red alarm and 10 seconds to recognize and report the resolution of a Red alarm.

When the UDS1 Interface circuit pack detects a Red alarm, the circuit pack will transmit a Yellow alarm to the remote DS1 endpoint and send a RED ALARM message to the maintenance software. After the Red alarm is confirmed, the

maintenance software places all trunks or ports of the circuit pack into the out-of-service state. The inquiry test will be run every 10 minutes until the Red alarm is cleared.

When the Red alarm is cleared, the UDS1 Interface circuit pack will stop transmitting the Yellow alarm to the remote DS1 endpoint. The maintenance software restores all trunks or ports of the UDS1 Interface circuit pack to the service state before the Red alarm occurs.

Loss of Multiframe Alarm

If the UDS1 Interface circuit pack is administered using DMI-BOS signaling, the UDS1 Interface circuit pack raises a Loss of Multiframe Alarm (LMA) when it cannot interpret the incoming signaling bits to synchronize to the multiframe pattern received in the 24th channel. Once the UDS1 Interface circuit pack detects an LMA, the circuit pack will transmit a Remote Multiframe Alarm (RMA) to the remote DS1 endpoint. Maintenance software handles both Red alarm and LMA alarm(s) using the same mechanism.

Table 3-366. TEST #140 Red Alarm Inquiry Test

Error Code	Test Result	Description/ Recommendation
	ABORT	Internal System Error 1. Retry the command at 1-minute intervals a maximum of 5 times.

Continued on next page

Table 3-366. TEST #140 Red Alarm Inquiry Test — *Continued*

Error Code	Test Result	Description/ Recommendation
2000	ABORT	Response to the test was not received within the allowable time period. This may be due to hyperactivity. Error type 1538 in the error log indicates hyperactivity. The hyperactive circuit pack is out of service and one or more of the following symptoms may be exhibited. 1. The UDS1-BD tests (such as test 138 and test 139) are aborting with error code 2000. 2. The tests run on the ports of this circuit pack are returning a no board result. 3. A **busyout** or a **release** command has no affect on the test results. 4. A **list config** command shows that the circuit pack and the ports are properly installed. **NOTE:** When hyperactivity occurs, the circuit pack is isolated from the system, and all of the trunks for this circuit pack are placed into the out of service state. The system will try to restore the circuit pack within 15 minutes. When no faults are detected for 15 minutes, the UDS1 interface circuit pack is restored to normal operation. All of the trunks for the UDS1 interface circuit pack are then returned to the in service state. Hyperactivity is often caused by the associated facility. In such a case, faults (such as slips, misframes, or blue alarms) would be entered in the error log. In addition, many hardware errors would be logged against the associated trunk circuits. If the facility is OK and the error occurs again after 15 minutes, replace the circuit pack.

Continued on next page

Table 3-366. TEST #140 Red Alarm Inquiry Test — *Continued*

Error Code	Test Result	Description/ Recommendation
	FAIL	The UDS1 interface circuit pack detected a red alarm. An out of frame condition occurred on the UDS1 interface circuit pack. The UDS1 interface circuit pack will transmit a yellow alarm to the remote UDS1 endpoint until the red alarm is retired. If the UDS1 connects to a T1 network facility or to another switch, do the following. 1. Verify that both endpoints of the DS1 link are administered using the same signaling mode, framing mode, and line coding. 2. Contact T1 Network Service or a technician at the far-end switch to diagnose the remote DS1 endpoint. 3. Check the physical connectivity of the UDS1 packs and of the cable. 4. Replace the local UDS1 interface circuit pack, and repeat the test. If the UDS1 connects to a line-side terminating device (for example, a PRI terminal adapter), do the following. 1. Verify that the switch DS1 and the line-side terminating device are administered using the same signaling mode, framing mode, and line coding. 2. Investigate the maintenance status of the line-side terminating device. Refer to the 'Line-Side Terminating Device Operating Manual' for information. 3. Contact the vendor of the line-side terminating device to diagnose the equipment. 4. Check the physical connection of the UDS1 interface circuit pack to the terminating device, and check the premise distribution system (or the intra-premise wiring) for physical connection failures. 5. Replace the local UDS1 interface circuit pack and repeat the test.

Continued on next page

Table 3-366. TEST #140 Red Alarm Inquiry Test — *Continued*

Error Code	Test Result	Description/ Recommendation
1	FAIL	The UDS1 interface circuit pack detected a loss of multiframe alarm (LMA). An out of frame condition occurred on the UDS1 interface circuit pack. The UDS1 interface circuit pack will transmit a remote multiframe alarm (RMA) to the remote UDS1 endpoint until the LMA is retired. If the UDS1 connects to a T1 network facility or to another switch, do the following: 1. Verify that both endpoints of the DS1 link are administered using the same signaling mode, framing mode, and line coding. 2. Contact T1 Network Service or a technician at the far-end switch to diagnose the remote DS1 endpoint. 3. Check the physical connectivity of the UDS1 packs and of the cable. 4. Replace the local UDS1 interface circuit pack, and repeat the test. If the UDS1 connects to a line-side terminating device (for example, a PRI terminal adapter), do the following. 1. Verify that the switch DS1 and the line-side terminating device are administered using the same signaling mode, framing mode, and line coding. 2. Investigate the maintenance status of the line-side terminating device. Refer to the 'Line-Side Terminating Device Operating Manual' for information. 3. Contact the vendor of the line-side terminating device to diagnose the equipment. 4. Check the physical connection of the UDS1 interface circuit pack to the terminating device, and check the premise distribution system (or the intra-premise wiring) for physical connection failures. 5. Replace the local UDS1 interface circuit pack and repeat the test.
	PASS	No Red alarm is detected on the UDS1 Interface circuit pack.

Continued on next page

Table 3-366. TEST #140 Red Alarm Inquiry Test — *Continued*

Error Code	Test Result	Description/ Recommendation
0	NO BOARD	The test could not relate the internal ID to the port (no board). This could be due to incorrect translations, no board is inserted, an incorrect board is inserted, or an insane board is inserted. 1. Ensure that the board translations are correct. Execute the **add ds1 PCSS** command to administer the UDS1 interface if it is not already administered. 2. If the board was already administered correctly, check the error log to determine whether the board is hyperactive. If this is the case, the board is shut down. Reseating the board will re-initialize the board. 3. If the board was found to be correctly inserted in step 1, then issue the **busyout board** command. 4. Issue the **reset board** command. 5. Issue the **release busy board** command. 6. Issue the **test board long** command. This should re-establish the linkage between the internal ID and the port.

Yellow Alarm Inquiry Test (#141)

Receiving a Yellow alarm from remote DS1 endpoint indicates that the remote DS1 endpoint has an out-of-frame condition. The Yellow Alarm Inquiry Test is used to determine whether the remote DS1 endpoint is transmitting a Yellow alarm. The UDS1 Interface circuit pack takes 500 msec to recognize and report a Yellow alarm and 500 msec to recognize and report that a Yellow alarm condition is cleared.

When the UDS1 Interface circuit pack detects a Yellow alarm from the remote DS1 endpoint, it will send a YELLOW-ALARM uplink message to the maintenance software. After the maintenance software receives the YELLOW-ALARM message, the Yellow Alarm Inquiry Test is run to confirm the Yellow alarm. Once the Yellow alarm is confirmed, the maintenance software places all trunks or ports on the circuit pack into the out-of-service state. The Inquiry Test will be run every 10 minutes until the Yellow alarm is cleared.

When the Yellow alarm is cleared, the maintenance software restores all trunks or ports on the UDS1 Interface circuit pack back to their previous service state before the Yellow alarm was raised.

This Yellow alarm corresponds to the yellow F2 state documented in CCITT Recommendation I.431.

Remote Multiframe Alarm

Remote Multiframe Alarm (RMA) indicates that the remote DS1 endpoint is in a Loss of Multiframe Alarm condition while the UDS1 Interface circuit pack is administered using the DMI-BOS common channel signaling. The RMA is handled as a Yellow alarm.

Yellow F5 Fault Alarm

For 32-channel E1 operation with CRC4 on, the F5 fault state is defined as a fault in the user-network interface, specifically in the direction from the user (PBX) to the network. Refer to CCITT recommendation I.431.

Table 3-367. TEST #141 Yellow Alarm Inquiry Test

Error Code	Test Result	Description/ Recommendation
	ABORT	Internal System Error 1. Retry the command at 1-minute intervals a maximum of 5 times.
2000	ABORT	Response to the test was not received within the allowable time period. This may be due to hyperactivity. Error type 1538 in the error log indicates hyperactivity. The hyperactive circuit pack is out of service and one or more of the following symptoms may be exhibited. 1. The UDS1-BD tests (such as test 138 and test 139) are aborting with error code 2000. 2. The tests run on the ports of this circuit pack are returning a no board result. 3. A **busyout** or a **release** command has no affect on the test results. 4. A **list config** command shows that the circuit pack and the ports are properly installed. When hyperactivity occurs, the circuit pack is isolated from the system, and all of the trunks for this circuit pack are placed into the out of service state. The system will try to restore the circuit pack within 15 minutes. When no faults are detected for 15 minutes, the UDS1 interface circuit pack is restored to normal operation. All of the trunks for the UDS1 interface circuit pack are then returned to the in service state. Hyperactivity is often caused by the associated facility. In such a case, faults (such as slips, misframes, or blue alarms) would be entered in the error log. In addition, many hardware errors would be logged against the associated trunk circuits. If the facility is OK and the error occurs again after 15 minutes, replace the circuit pack.

Continued on next page

Table 3-367. TEST #141 Yellow Alarm Inquiry Test — *Continued*

Error Code	Test Result	Description/ Recommendation
	FAIL	The UDS1 interface circuit pack detected a yellow alarm sent by the remote DS1 endpoint. An out of frame condition occurred at the DS1 endpoint. If the UDS1 connects to a T1 network facility or to another switch, do the following: 1. Verify that both endpoints of the DS1 link are administered using the same signaling mode, framing mode, and line coding. 2. Contact T1 Network Service or a technician at the far-end switch to diagnose the remote DS1 endpoint. 3. Check the physical connectivity of the UDS1 packs and of the cable.. 4. Replace the local UDS1 interface circuit pack, and repeat the test. If the UDS1 connects to a line-side terminating device (for example, a PRI terminal adapter), do the following: 1. Verify that the switch DS1 and the line-side terminating device are administered using the same signaling mode, framing mode, and line coding. 2. Investigate the maintenance status of the line-side terminating device. Refer to the 'Line-Side Terminating Device Operating Manual' for information. 3. Contact the vendor of the line-side terminating device to diagnose the equipment. 4. Check the physical connection of the UDS1 interface circuit pack to the terminating device, and check the premise distribution system (or the intra-premise wiring) for physical connection failures. 5. Replace the local UDS1 interface circuit pack and repeat the test.

Continued on next page

Table 3-367. TEST #141 Yellow Alarm Inquiry Test — *Continued*

Error Code	Test Result	Description/ Recommendation
1	FAIL	The UDS1 interface circuit pack detected a remote multiframe alarm (RMA) sent by the remote DS1 endpoint. An out of frame condition occurred at the DS1 endpoint. If the UDS1 connects to a T1 network facility or to another switch, do the following: 1. Verify that both endpoints of the DS1 link are administered using the same signaling mode, framing mode, and line coding. 2. Contact T1 Network Service or a technician at the far-end switch to diagnose the remote DS1 endpoint. 3. Check the physical connectivity of the UDS1 packs and of the cable. 4. Replace the local UDS1 interface circuit pack, and repeat the test. If the UDS1 connects to a line-side terminating device (for example, a PRI terminal adapter), do the following: 1. Verify that the switch DS1 and the line-side terminating device are administered using the same signaling mode, framing mode, and line coding. 2. Investigate the maintenance status of the line-side terminating device. Refer to the 'Line-Side Terminating Device Operating Manual' for information. 3. Contact the vendor of the line-side terminating device to diagnose the equipment. 4. Check the physical connection of the UDS1 interface circuit pack to the terminating device, and check the premise distribution system (or the intra-premise wiring) for physical connection failures. 5. Replace the local UDS1 interface circuit pack and repeat the test.

Continued on next page

Table 3-367. TEST #141 Yellow Alarm Inquiry Test — *Continued*

Error Code	Test Result	Description/ Recommendation
2	FAIL	The UDS1 interface circuit pack is reporting a Yellow F5 fault alarm. There is a fault in the User-Network interface from the user (PBX) to the network. An out-of-frame condition occurs on the remote DS1 endpoint. If the UDS1 connects to a T1 network facility: 1. Verify that both endpoints of the DS1 link are administered using the same signaling mode, framing mode, and line coding. 2. Contact T1 Network Service to diagnose the remote DS1 endpoint. 3. Check the physical connectivity of the DS1 Interface circuit packs and cable. 4. Replace the local UDS1 Interface circuit pack and repeat the test. If the UDS1 connects to a line-side terminating device such as a PRI terminal adapter: 1. Verify that the switch DS1 and the line-side terminating device are administered using the same signaling mode, framing mode, and line coding. 2. Investigate the maintenance status of the line-side terminating device. Refer to the 'Line-Side Terminating Device Operating Manual' for information. 3. Contact the vendor of the line-side terminating device to diagnose the equipment. 4. Check the physical connection of the UDS1 Interface circuit pack to the terminating device. Check premise distribution system (or intra-premise wiring) for physical connection failures. 5. Replace the local UDS1 Interface circuit pack and repeat the test.
	PASS	Neither a Yellow alarm nor a Remote Multiframe Alarm nor a F5 state alarm is being received from the remote DS1 endpoint.

Continued on next page

Table 3-367. TEST #141 Yellow Alarm Inquiry Test — *Continued*

Error Code	Test Result	Description/ Recommendation
0	NO BOARD	The test could not relate the internal ID to the port (no board). This could be due to incorrect translations, no board is inserted, an incorrect board is inserted, or an insane board is inserted. 1. Ensure that the board translations are correct. Execute the **add ds1 PCSS** command to administer the UDS1 interface if it is not already administered. 2. If the board was already administered correctly, check the error log to determine whether the board is hyperactive. If this is the case, the board is shut down. Reseating the board will re-initialize the board. 3. If the board was found to be correctly inserted in step 1, then issue the **busyout board** command. 4. Issue the **reset board** command. 5. Issue the **release busy board** command. 6. Issue the **test board long** command. This should re-establish the linkage between the internal ID and the port.

Major Alarm Inquiry Test (#142)

The Major alarm raised by a UDS1 Interface circuit pack indicates that the average bit error rate on the DS1 facility is greater than 1/1000. The Major Alarm Inquiry Test is used to determine that the received DS1 bit error rate is greater than 1/1000. The UDS1 Interface circuit pack takes 10 seconds to recognize and report a Major alarm and 10 seconds to recognize and report that a Major alarm condition is cleared.

When the UDS1 Interface circuit pack detects a Major alarm, it will send a MAJOR-ALARM message to the maintenance software. (32-channel interfaces send a YELLOW alarm to the far end). After the maintenance software receives a MAJOR-ALARM message, the Major Alarm Inquiry Test is initiated to confirm the Major alarm on the UDS1 Interface circuit pack. The Inquiry Test will be run every 10 minutes until the Major alarm is cleared. The maintenance software places all trunks or ports on the circuit pack in the out-of-service state if the Major alarm persists for more than 20 minutes.

When the Major alarm is cleared, the maintenance software restores all trunks or ports on the circuit pack to their previous service state before a Major alarm occurs.

Table 3-368. TEST #142 Major Alarm Inquiry Test

Error Code	Test Result	Description/ Recommendation
	ABORT	Internal System Error 1. Retry the command at 1-minute intervals for a maximum of 5 times.
2000	ABORT	Response to the test was not received within the allowable time period. This may be due to hyperactivity. Error type 1538 in the error log indicates hyperactivity. The hyperactive circuit pack is out of service and one or more of the following symptoms may be exhibited. 1. The UDS1-BD tests (such as test 138 and test 139) are aborting with error code 2000. 2. The tests run on the ports of this circuit pack are returning a no board result. 3. A **busyout** or a **release** command has no affect on the test results. 4. A **list config** command shows that the circuit pack and the ports are properly installed. When hyperactivity occurs, the circuit pack is isolated from the system, and all of the trunks for this circuit pack are placed into the out of service state. The system will try to restore the circuit pack within 15 minutes. When no faults are detected for 15 minutes, the UDS1 interface circuit pack is restored to normal operation. All of the trunks for the UDS1 interface circuit pack are then returned to the in service state. Hyperactivity is often caused by the associated facility. In such a case, faults (such as slips, misframes, or blue alarms) would be entered in the error log. In addition, many hardware errors would be logged against the associated trunk circuits. If the facility is OK and the error occurs again after 15 minutes, replace the circuit pack.
2100	ABORT	Could not allocate the necessary system resources to run this test. 1. Retry the command at 1-minute intervals for a maximum of 5 times.

Continued on next page

Table 3-368. TEST #142 Major Alarm Inquiry Test — *Continued*

Error Code	Test Result	Description/ Recommendation
	FAIL	The performance of the DS1 link between the UDS1 interface circuit pack and the remote DS1 endpoint is very poor. If the UDS1 connects to a T1 network facility or to another switch, do the following: 1. Enter the **list measurement ds1-log PCSS** command to read the error seconds measurement. 2. Verify that both endpoints of the DS1 link are administered using the same signaling mode, framing mode, and line coding. 3. Contact T1 Network Service or the technician at the remote switch to diagnose the equipment. 4. Check the physical connectivity of the UDS1 interface circuit packs and the cable. 5. Replace the local UDS1 interface circuit pack, and repeat the test. If the UDS1 connects to a line-side terminating device (for example, a PRI terminal adapter), do the following: 1. The performance of the DS1 link between the UDS1 interface circuit pack and the line-side terminating device is very poor. Enter the **list measurement ds1-log PCSS** command to read the error seconds measurement. 2. Verify that the switch DS1 and the line-side terminating device are administered using the same signaling mode, framing mode, and line coding. 3. Investigate the maintenance status of the line-side terminating device. Refer to the 'Line-Side Terminating Device Operating Manual' for information. 4. Contact the vendor of the line-side terminating device to diagnose the equipment. 5. Check the physical connection of the UDS1 interface circuit pack to the terminating device, and check the premise distribution system (or the intra-premise wiring) for physical connection failures. 6. Replace the local UDS1 interface circuit pack and repeat the test.
	PASS	No Major alarm is detected in the UDS1 Interface circuit pack.

Continued on next page

Table 3-368. TEST #142 Major Alarm Inquiry Test — *Continued*

Error Code	Test Result	Description/ Recommendation
0	NO BOARD	The test could not relate the internal ID to the port (no board). This could be due to incorrect translations, no board is inserted, an incorrect board is inserted, or an insane board is inserted. 1. Ensure that the board translations are correct. Execute the **add ds1 PCSS** command to administer the UDS1 interface if it is not already administered. 2. If the board was already administered correctly, check the error log to determine whether the board is hyperactive. If this is the case, the board is shut down. Reseating the board will re-initialize the board. 3. If the board was found to be correctly inserted in step 1, then issue the **busyout board** command. 4. Issue the **reset board** command. 5. Issue the **release busy board** command. 6. Issue the **test board long** command. This should re-establish the linkage between the internal ID and the port.

Minor Alarm Inquiry Test (#143)

The Minor alarm raised by a UDS1 Interface circuit pack indicates that the average bit error rate on the DS1 facility is greater than 1/1,000,000, but less than 1/1000. The Minor Alarm Inquiry Test is used to determine that the received DS1 bit error rate is greater than 1/1,000,000 and less than 1/1000. When D4 framing mode is selected, the UDS1 Interface circuit pack takes 41 minutes to recognize and report a Minor alarm and 41 minutes to recognize and report that a Minor alarm condition has cleared. If ESF framing mode is selected, the UDS1 Interface circuit pack takes 10 minutes to recognize and report a Minor alarm and 10 minutes to recognize and report that a Minor alarm condition has cleared.

When the UDS1 Interface circuit pack detects a Minor alarm condition, it will send a MINOR-ALARM message to the maintenance software. After the maintenance software receives a MINOR-ALARM message, the Minor Alarm Inquiry Test is initiated to confirm the Minor alarm. All trunks or ports on the circuit pack are kept in the in-service state after the Minor alarm is confirmed. The Minor Alarm Inquiry Test is run every 10 minutes until the Minor alarm is cleared.

Table 3-369. TEST #143 Minor Alarm Inquiry Test

Error Code	Test Result	Description/ Recommendation
	ABORT	Internal System Error 1. Retry the command at 1-minute intervals a maximum of 5 times.
2000	ABORT	Response to the test was not received within the allowable time period. This may be due to hyperactivity. Error type 1538 in the error log indicates hyperactivity. The hyperactive circuit pack is out of service and one or more of the following symptoms may be exhibited. 1. The UDS1-BD tests (such as test 138 and test 139) are aborting with error code 2000. 2. The tests run on the ports of this circuit pack are returning a no board result. 3. A **busyout** or a **release** command has no affect on the test results. 4. A **list config** command shows that the circuit pack and the ports are properly installed. When hyperactivity occurs, the circuit pack is isolated from the system, and all of the trunks for this circuit pack are placed into the out of service state. The system will try to restore the circuit pack within 15 minutes. When no faults are detected for 15 minutes, the UDS1 interface circuit pack is restored to normal operation. All of the trunks for the UDS1 interface circuit pack are then returned to the in service state. Hyperactivity is often caused by the associated facility. In such a case, faults (such as slips, misframes, or blue alarms) would be entered in the error log. In addition, many hardware errors would be logged against the associated trunk circuits. If the facility is OK and the error occurs again after 15 minutes, replace the circuit pack.
2100	ABORT	Could not allocate the necessary system resources to run this test. 1. Retry the command at 1-minute intervals for a maximum of 5 times.

Continued on next page

Table 3-369. TEST #143 Minor Alarm Inquiry Test — *Continued*

Error Code	Test Result	Description/ Recommendation
	FAIL	If the UDS1 connects to a T1 network facility or to another switch, do the following: 1. The performance of the DS1 link between the UDS1 interface circuit pack and the remote DS1 endpoint is poor. Enter the **list measurement ds1-log PCSS** command to read the error seconds measurement. 2. Verify that both endpoints of the DS1 link are administered using the same signaling mode, framing mode, and line coding. 3. Contact T1 Network Service or the technician at the remote switch to diagnose the equipment. 4. Check the physical connectivity of the UDS1 interface circuit packs and the cable. 5. Replace the local UDS1 interface circuit pack, and repeat the test. If the UDS1 connects to a line-side terminating device (for example, a PRI terminal adapter), do the following: 1. The performance of the DS1 link between the UDS1 interface circuit pack and the line-side terminating device is poor. Enter the **list measurement ds1-log PCSS** command to read the error seconds measurement. 2. Verify that the switch DS1 and the line-side terminating device are administered using the same signaling mode, framing mode, and line coding. 3. Investigate the maintenance status of the line-side terminating device. Obtain the error seconds measurement on the terminating device (if possible). Refer to the 'Line-Side Terminating Device Operating Manual' for information. 4. Contact the vendor of the line-side terminating device to diagnose the equipment. 5. Check the physical connection of the UDS1 interface circuit pack to the terminating device, and check the premise distribution system (or the intra-premise wiring) for physical connection failures. 6. Replace the local UDS1 interface circuit pack and repeat the test.
	PASS	No Minor alarm is detected in the UDS1 Interface circuit pack.

Continued on next page

Table 3-369. TEST #143 Minor Alarm Inquiry Test — *Continued*

Error Code	Test Result	Description/ Recommendation
0	NO BOARD	The test could not relate the internal ID to the port (no board). This could be due to incorrect translations, no board is inserted, an incorrect board is inserted, or an insane board is inserted. 1. Ensure that the board translations are correct. Execute the **add ds1 PCSS** command to administer the UDS1 interface if it is not already administered. 2. If the board was already administered correctly, check the error log to determine whether the board is hyperactive. If this is the case, the board is shut down. Reseating the board will re-initialize the board. 3. If the board was found to be correctly inserted in step 1, then issue the **busyout board** command. 4. Issue the **reset board** command. 5. Issue the **release busy board** command. 6. Issue the **test board long** command. This should re-establish the linkage between the internal ID and the port.

Slip Alarm Inquiry Test (#144)

Slips occur when transmitter and receiver are not running at precisely the same clock rate. The UDS1 Interface circuit pack can detect both positive and negative slips on the DS1 facility. The Slip Alarm Inquiry Test is used to acquire the total number of slips that have occurred on a DS1 link.

When the UDS1 Interface circuit pack detects a slip condition, the circuit pack will increase the on-board slip counter by 1. A SLIP-COUNT message is spontaneously sent to the system software after the counter reaches a threshold (for example, 88). When the maintenance software receives the SLIP-COUNT message, the Slip Alarm Inquiry Test is initiated to query the slip counters on a UDS1 Interface circuit pack and total the slip counts in the maintenance software.

If the count of slips is over the threshold, a Minor alarm is raised against the UDS1 Interface circuit pack. All trunks or ports of the UDS1 Interface circuit pack remain in the in-service state. If the UDS1 Interface circuit pack is used to supply the system synchronization source, the MINOR alarm will initiate a synchronization source switch. See TDM-BUS (TDM Bus) and SYNC (Synchronization) Maintenance documentation for details.

Table 3-370. TEST #144 Slip Alarm Inquiry Test

Error Code	Test Result	Description/ Recommendation
	ABORT	Internal System Error 1. Retry the command at 1-minute intervals a maximum of 5 times.
2000	ABORT	Response to the test was not received within the allowable time period. This may be due to hyperactivity. Error type 1538 in the error log indicates hyperactivity. The hyperactive circuit pack is out of service and one or more of the following symptoms may be exhibited. 1. The UDS1-BD tests (such as test 138 and test 139) are aborting with error code 2000. 2. The tests run on the ports of this circuit pack are returning a no board result. 3. A **busyout** or a **release** command has no affect on the test results. 4. A **list config** command shows that the circuit pack and the ports are properly installed. When hyperactivity occurs, the circuit pack is isolated from the system, and all of the trunks for this circuit pack are placed into the out of service state. The system will try to restore the circuit pack within 15 minutes. When no faults are detected for 15 minutes, the UDS1 interface circuit pack is restored to normal operation. All of the trunks for the UDS1 interface circuit pack are then returned to the in service state. Hyperactivity is often caused by the associated facility. In such a case, faults (such as slips, misframes, or blue alarms) would be entered in the error log. In addition, many hardware errors would be logged against the associated trunk circuits. If the facility is OK and the error occurs again after 15 minutes, replace the circuit pack.
2100	ABORT	Could not allocate the necessary system resources to run this test. 1. Retry the command at 1-minute intervals for a maximum of 5 times.

Continued on next page

Table 3-370. TEST #144 Slip Alarm Inquiry Test — *Continued*

Error Code	Test Result	Description/ Recommendation
1 to 88	FAIL	The test failed because the UDS1 interface circuit pack and the remote DS1 endpoint are not synchronized to the same clock rate. The UDS1 interface circuit pack detected a slip alarm. The error code equals the number of slips detected by the UDS1 interface circuit pack since the last slip alarm inquiry test. If the UDS1 connects to a T1 network facility or to another switch, do the following: 1. Retry the command at 1-minute intervals for a maximum of 5 times. 2. If the DS1 interface circuit pack is a TN464C, enter the **list measurement ds1-log PCSS** command to read the error seconds measurement. 3. Verify that both endpoints of the DS1 link are administered using the same signaling mode, framing mode, and line coding. 4. Check the active alarm and error logs for recent alarms and errors against the synchronization (SYNC). Follow the suggested repair procedure for these errors. 5. Contact T1 Network Service or the technician at the remote switch to diagnose the remote DS1 endpoint. 6. Check the physical connectivity of the UDS1 interface circuit packs and the cable. 7. Replace the local UDS1 interface circuit pack, and repeat the test. *Information continues.*

Continued on next page

Table 3-370. TEST #144 Slip Alarm Inquiry Test — *Continued*

Error Code	Test Result	Description/ Recommendation
1 to 88 *(cont'd.)*	FAIL *(cont'd.)*	If the UDS1 connects to a line-side terminating device (for example, a PRI terminal adapter), do the following: 1. Retry the command at 1-minute intervals for a maximum of 5 times. 2. Enter the **list measurement ds1-log PCSS** command to read the error seconds measurement. 3. Verify that the switch DS1 and the line-side terminating device are administered using the same signaling mode, framing mode, and line coding. 4. Investigate the maintenance status of the line-side terminating device. Refer to the 'Line-Side Terminating Device Operating Manual' for information. 5. Contact the vendor of the line-side terminating device to diagnose the equipment. 6. Check the physical connection of the UDS1 interface circuit pack to the terminating device, and check the premise distribution system (or the intra-premise wiring) for physical connection failures. 7) Replace the local UDS1 interface circuit pack and repeat the test.
	PASS	No Slip alarm is detected on the UDS1 Interface circuit pack.
0	NO BOARD	The test could not relate the internal ID to the port (no board). This could be due to incorrect translations, no board is inserted, an incorrect board is inserted, or an insane board is inserted. 1. Ensure that the board translations are correct. Execute the **add ds1 PCSS** command to administer the UDS1 interface if it is not already administered. 2. If the board was already administered correctly, check the error log to determine whether the board is hyperactive. If this is the case, the board is shut down. Reseating the board will re-initialize the board. 3. If the board was found to be correctly inserted in step 1, then issue the **busyout board** command. 4. Issue the **reset board** command. 5. Issue the **release busy board** command. 6. Issue the **test board long** command. This should re-establish the linkage between the internal ID and the port.

Misframe Alarm Inquiry Test (#145)

Misframe Alarm indicates that framing bits observed on a UDS1 Interface circuit pack are in error. The Misframe Alarm Inquiry Test queries the total number of misframes that have occurred on a DS1 Interface circuit pack since the last inquiry.

When the DS1 Interface circuit pack detects a misframe error, it will increase its misframe counter by 1. If the counter reaches a specified threshold (i.e.- 17), a MISFRAME-COUNT message is automatically sent to the switch maintenance software. After the maintenance software receives the MISFRAME-COUNT message, the Misframe Alarm Inquiry Test is initiated to collect the misframe counts from the UDS1 Interface circuit pack.

When the threshold of misframes is reached, if the UDS1 Interface circuit pack is supplying the system synchronization source, then a switching synchronization source message is sent to the TDM Bus Clock. See TDM-BUS (TDM Bus) Maintenance documentation for details. A Minor alarm against the UDS1 Interface circuit pack is raised, but all trunks or ports of the UDS1 Interface circuit pack remain in the in-service state.

Table 3-371. TEST #145 Misframe Alarm Inquiry Test

Error Code	Test Result	Description/ Recommendation
	ABORT	Internal System Error 1. Retry the command at 1-minute intervals a maximum of 5 times.
2000	ABORT	Response to the test was not received within the allowable time period. This may be due to hyperactivity. Error type 1538 in the error log indicates hyperactivity. The hyperactive circuit pack is out of service and one or more of the following symptoms may be exhibited. 1. The UDS1-BD tests (such as test 138 and test 139) are aborting with error code 2000. 2. The tests run on the ports of this circuit pack are returning a no board result. 3. A **busyout** or a **release** command has no affect on the test results. 4. A **list config** command shows that the circuit pack and the ports are properly installed. When hyperactivity occurs, the circuit pack is isolated from the system, and all of the trunks for this circuit pack are placed into the out of service state. The system will try to restore the circuit pack within 15 minutes. When no faults are detected for 15 minutes, the UDS1 interface circuit pack is restored to normal operation. All of the trunks for the UDS1 interface circuit pack are then returned to the in service state. Hyperactivity is often caused by the associated facility. In such a case, faults (such as slips, misframes, or blue alarms) would be entered in the error log. In addition, many hardware errors would be logged against the associated trunk circuits. If the facility is OK and the error occurs again after 15 minutes, replace the circuit pack.
2100	ABORT	Could not allocate the necessary system resources to run this test. 1. Retry the command at 1-minute intervals for a maximum of 5 times.

Continued on next page

Table 3-371. TEST #145 Misframe Alarm Inquiry Test — *Continued*

Error Code	Test Result	Description/ Recommendation
1 to 17	FAIL	The test failed because the UDS1 interface circuit pack detected errors in the received framing bits pattern. The error code equals the number of misframes detected by the UDS1 interface circuit pack since the last misframe alarm inquiry test. Major bit and minor bit error rate (error types 2561 and 2817) error logs often accompany misframe alarms. Clearing the cause of these error logs may clear the misframes which are occurring. If the UDS1 connects to a T1 network facility or to another switch, do the following: 1. Retry the command at 1-minute intervals for a maximum of 5 times. 2. If the DS1 interface circuit pack is a TN464C, enter the **list measurement ds1-log PCSS** command to read the error seconds measurement. 3. Verify that both endpoints of the DS1 link are administered using the same signaling mode, framing mode, and line coding. 4. Check the active alarm and error logs for recent alarms and errors against the synchronization (SYNC). Follow the suggested repair procedure for these errors. 5. Contact T1 Network Service or the technician at the remote switch to diagnose the remote DS1 endpoint. 6. Check the physical connectivity of the UDS1 interface circuit packs and the cable. 7. Replace the local UDS1 interface circuit pack, and repeat the test. *More information continues.*

Continued on next page

Table 3-371. TEST #145 Misframe Alarm Inquiry Test — *Continued*

Error Code	Test Result	Description/ Recommendation
1 to 17 *(cont'd.)*	FAIL *(cont'd.)*	If the UDS1 connects to a line-side terminating device such as a PRI terminal adapter: 1. Retry the command at 1-minute intervals for a maximum of 5 times. 2. Enter the **list measurement ds1-log PCSS** command to read the error seconds measurement. 3. Verify that the switch DS1 and the line-side terminating device are administered using the same signaling mode, framing mode, and line coding. 4. Investigate the maintenance status of the line-side terminating device. Refer to the 'Line-Side Terminating Device Operating Manual' for information. 5. Contact the vendor of the line-side terminating device to diagnose the equipment. 6. Check the physical connection of the UDS1 interface circuit pack to the terminating device, and check the premise distribution system (or the intra-premise wiring) for physical connection failures. 7. Replace the local UDS1 interface circuit pack and repeat the test.
	PASS	No Misframe alarm is detected on the UDS1 Interface circuit pack.
0	NO BOARD	The test could not relate the internal ID to the port (no board). This could be due to incorrect translations, no board is inserted, an incorrect board is inserted, or an insane board is inserted. 1. Ensure that the board translations are correct. Execute the **add ds1 PCSS** command to administer the UDS1 interface if it is not already administered. 2. If the board was already administered correctly, check the error log to determine whether the board is hyperactive. If this is the case, the board is shut down. Reseating the board will re-initialize the board. 3. If the board was found to be correctly inserted in step 1, then issue the **busyout board** command. 4. Issue the **reset board** command. 5. Issue the **release busy board** command. 6. Issue the **test board long** command. This should re-establish the linkage between the internal ID and the port.

Translation Update Test (#146)

The Translation Update Test sends the circuit-pack-level information specified by System Administration to the UDS1 Interface circuit pack. Translation includes the following data administered for a UDS1 Interface circuit pack (see output of **display ds1 PCSS** command): DS1 Link Length between two DS1 endpoints, Synchronization Source Control, All Zero Suppression, Framing Mode, Signaling Mode, Time Slot Number of 697-Hz Tone, Time Slot Number of 700-Hz Tone, etc.

Table 3-372. TEST #146 Translation Update Test

Error Code	Test Result	Description/ Recommendation
	ABORT	Internal System Error 1. Retry the command at 1-minute intervals a maximum of 5 times.
	FAIL	Internal system software error. 1. Enter the **display ds1 PCSS** command to verify the UDS1 Interface circuit pack translation.
	PASS	Translation data has been downloaded to the UDS1 Interface circuit pack successfully.
0	NO BOARD	The test could not relate the internal ID to the port (no board). This could be due to incorrect translations, no board is inserted, an incorrect board is inserted, or an insane board is inserted. 1. Ensure that the board translations are correct. Execute the **add ds1 PCSS** command to administer the UDS1 interface if it is not already administered. 2. If the board was already administered correctly, check the error log to determine whether the board is hyperactive. If this is the case, the board is shut down. Reseating the board will re-initialize the board. 3. If the board was found to be correctly inserted in step 1, then issue the **busyout board** command. 4. Issue the **reset board** command. 5. Issue the **release busy board** command. 6. Issue the **test board long** command. This should re-establish the linkage between the internal ID and the port.

DS1 Board Loopback Test (#1209)

This test is destructive.

The DS1 Board Loopback (BLB) Test causes a loopback at the TN464F DS1 board edge and tests DS1 board internal circuitry.

The test is destructive and can only be initiated by a system technician demanded *test ds1-loop PCSS ds1/csu-loopback-tests* command.

All trunks or ports on the UDS1 Interface circuit pack must be busied out via the system technician **busyout board** command before running the BLB Test.

When the BLB Test is initiated, maintenance software sends an appropriate message to the TN464F UDS1 Interface circuit pack to start the test. The board will set up the BLB loopback, transmit a test pattern, and verify that the pattern is received unaltered through the loopback. If the transmitted and received pattern is different, the test fails.

When the test is complete, all trunks or ports on the TN464F UDS1 Interface circuit pack are restored to the in-service state after the **release board** command is entered.

Table 3-373. TEST #1209 DS1 Board Loopback Test

Error Code	Test Result	Description/ Recommendation
	ABORT	Internal System Error 1. Retry the *test ds1-loop PCSS ds1/csu-loopback-tests* command at 1-minute intervals a maximum of 5 times.
1005	ABORT	DS1 Board Loopback Test cannot be executed in the current configuration. To run this, the TN464F or later suffix UDS1 must be administered for 24-channel operation. The "Bit Rate" field on the DS1 circuit pack administration form must be set to "1.544" for 24-channel operation.
1015	ABORT	Ports on the UDS1 Interface circuit pack have not been busied out to out-of-service. 1. Enter the **busyout board PCSS** command to put all trunks or ports of the UDS1 Interface circuit pack into the out-of-service state. 2. Retry the command.
1039	ABORT	The UDS1 Interface circuit pack is providing timing for the system. Executing this test could cause major system disruption. If the UDS1 Interface circuit pack needs to be tested, set the synchronization reference to another DS1 Interface circuit pack or to the Tone-Clock circuit pack via the following command sequence: 1. Issue the **disable synchronization-switch** command. 2. Next, issue the **set synchronization PCSS** command. 3. Lastly, issue the **enable synchronization-switch** command. Then rerun the test. If the test aborts again, a different ABORT error code will be generated. Follow the recommended maintenance procedures for that error code.

Continued on next page

Table 3-373. TEST #1209 DS1 Board Loopback Test — *Continued*

Error Code	Test Result	Description/ Recommendation
1950	ABORT	Another loopback/span test is already executing on the DS1 boardor the board is in a network requested loopback mode (Line loopback or Payload loopback). The hardware error log will indicate whether a Customer Loopback Jack Test, Far CSU Loopback Test, or the One-Way Span Test is executing or if the board is in line loopback or payload loopback mode. Only one long-duration loopback/span test can be active at a given time. Thus, if a loopback/span test is already active, that test must be terminated via the **test ds1-loop PCSS end-loopback/span-test** command in order to execute this test.
2000	ABORT	Response to the test was not received within the allowable time period. This may be due to hyperactivity. Error type 1538 in the error log indicates hyperactivity. The hyperactive circuit pack is out of service and one or more of the following symptoms may be exhibited. 1. The UDS1-BD tests (such as test 138 and test 139) are aborting with error code 2000. 2. The tests run on the ports of this circuit pack are returning a no board result. 3. A **busyout** or a **release** command has no affect on the test results. 4. A **list config** command shows that the circuit pack and the ports are properly installed. When hyperactivity occurs, the circuit pack is isolated from the system, and all of the trunks for this circuit pack are placed into the out of service state. The system will try to restore the circuit pack within 15 minutes. When no faults are detected for 15 minutes, the UDS1 interface circuit pack is restored to normal operation. All of the trunks for the UDS1 interface circuit pack are then returned to the in service state. Hyperactivity is often caused by the associated facility. In such a case, faults (such as slips, misframes, or blue alarms) would be entered in the error log. In addition, many hardware errors would be logged against the associated trunk circuits. If the facility is OK and the error occurs again after 15 minutes, replace the circuit pack.
2100	ABORT	Could not allocate the necessary system resources to run this test. 1. Retry the command at 1-minute intervals for a maximum of 5 times.
	FAIL	UDS1 Interface circuit pack failed the DS1 Board Loopback Test. 1. Retry the **test ds1-loop PCSS ds1/csu-loopback-tests** command. 2. If the BLB test continues to fail, then replace the UDS1 circuit pack.
	PASS	The BLB test executed successfully. The test pattern was transmitted and received successfully up to the TN464F DS1 board edge.

Continued on next page

Table 3-373. TEST #1209 DS1 Board Loopback Test — *Continued*

Error Code	Test Result	Description/ Recommendation
0	NO BOARD	The test could not relate the internal ID to the port (no board). This could be due to incorrect translations, no board is inserted, an incorrect board is inserted, or an insane board is inserted. 1. Ensure that the board translations are correct. Execute the **add ds1 PCSS** command to administer the UDS1 interface if it is not already administered. 2. If the board was already administered correctly, check the error log to determine whether the board is hyperactive. If this is the case, the board is shut down. Reseating the board will re-initialize the board. 3. If the board was found to be correctly inserted in step 1, then issue the **busyout board** command. 4. Issue the **reset board** command. 5. Issue the **release busy board** command. 6. Issue the **test board long** command. This should re-establish the linkage between the internal ID and the port.

CSU Equipment Loopback Test (#1210)

This test is destructive.

The CSU Equipment Loopback (ELB) Test causes a loopback at the near-edge of the local 120A1 CSU Module and tests the connection from the TN464F DS1 board to the CSU Module (DS1 board edge, connection, and CSU Module edge). This test will only be performed if the 120A1 CSU Module is present, administered, and connected to a 1.544 Mbps TN464F DS1 circuit pack on the back of the port carrier.

The test is destructive and can only be initiated by a system technician demanded *test ds1-loop PCSS ds1/csu-loopback-tests* command.

All trunks or ports on the UDS1 Interface circuit pack must be busied out via the system technician **busyout board** command before running the ELB Test.

When the ELB Test is initiated, maintenance software sends an appropriate message to the TN464F UDS1 Interface circuit pack to start the test. The board will set up the ELB loopback, transmit a test pattern, and verify that the pattern is received unaltered through the loopback. If the transmitted and received pattern is different, the test fails.

In addition, the DS1 circuit pack hardware applies a DC current while the test is running in order to detect any broken wires which may not be detected by the loopback pattern itself.

When the test is complete, all trunks or ports on the TN464F UDS1 Interface circuit pack are restored to the in-service state after the **release board** command is entered.

Table 3-374. TEST #1210 CSU Equipment Loopback Test

Error Code	Test Result	Description/ Recommendation
	ABORT	Internal System Error 1. Retry the **test ds1-loop PCSS ds1/csu-loopback-tests** command at 1-minute intervals a maximum of 5 times.
1005	ABORT	CSU Equipment Loopback Test cannot be executed in the current configuration. To run this test, the *Near-End CSU Type* field on the DS1 circuit pack administration form must be set to *integrated* and the "Bit Rate" field must be set to "1.544" (24-channel operation). 1. Use the **change ds1 PCSS** command to set the *Near-End CSU Type* field on the DS1 circuit pack administration form to *integrated*, and/or change the "Bit Rate" field to "1.544" if the board is to be used in 24-channel configuration. 2. Retry the **test ds1-loop PCSS ds1/csu-loopback-tests** command.
1015	ABORT	Ports on the UDS1 Interface circuit pack have not been busied out to out-of-service. 1. Enter the **busyout board PCSS** command to put all trunks or ports of the UDS1 Interface circuit pack into the out-of-service state. 2. Retry the command.
1039	ABORT	The UDS1 Interface circuit pack is providing timing for the system. Executing this test could cause major system disruption. 1. If the UDS1 Interface circuit pack needs to be tested, set the synchronization reference to another DS1 Interface circuit pack or to the Tone-Clock circuit pack via the following command sequence: ■ Issue the **disable synchronization-switch** command. ■ Next, issue the **set synchronization PCSS** command. ■ Lastly, issue the **enable synchronization-switch** command. Then rerun the test. 2. If the test aborts again, a different ABORT error code will be generated. Follow the recommended maintenance procedures for that error code.

Continued on next page

Table 3-374. TEST #1210 CSU Equipment Loopback Test — *Continued*

Error Code	Test Result	Description/ Recommendation
1950	ABORT	Another loopback/span test is already executing on the DS1 boardor the board is in a network requested loopback mode (Line loopback or Payload loopback). The hardware error log will indicate whether a Customer Loopback Jack Test, Far CSU Loopback Test, or the One-Way Span Test is executing or if the board is in line loopback or payload loopback mode. Only one long-duration loopback/span tests can be active at a given time. Thus, if a loopback/span test is already active, that test must be terminated via the **test ds1-loop PCSS end-loopback/span-test** command in order to execute this test.
1951	ABORT	The CSU Equipment Loopback Test could not be executed because the 120A1 CSU Module was not physically installed. Physically connect the 120A1 CSU Module to the TN464F board on the back of the port carrier.
2000	ABORT	Response to the test was not received within the allowable time period. This may be due to hyperactivity. Error type 1538 in the error log indicates hyperactivity. The hyperactive circuit pack is out of service and one or more of the following symptoms may be exhibited. 1. The UDS1-BD tests (such as test 138 and test 139) are aborting with error code 2000. 2. The tests run on the ports of this circuit pack are returning a no board result. 3. A **busyout** or a **release** command has no affect on the test results. 4. A **list config** command shows that the circuit pack and the ports are properly installed. When hyperactivity occurs, the circuit pack is isolated from the system, and all of the trunks for this circuit pack are placed into the out of service state. The system will try to restore the circuit pack within 15 minutes. When no faults are detected for 15 minutes, the UDS1 interface circuit pack is restored to normal operation. All of the trunks for the UDS1 interface circuit pack are then returned to the in service state. Hyperactivity is often caused by the associated facility. In such a case, faults (such as slips, misframes, or blue alarms) would be entered in the error log. In addition, many hardware errors would be logged against the associated trunk circuits. If the facility is OK and the error occurs again after 15 minutes, replace the circuit pack.
2100	ABORT	Could not allocate the necessary system resources to run this test. 1. Retry the command at 1-minute intervals for a maximum of 5 times.

Continued on next page

Table 3-374. TEST #1210 CSU Equipment Loopback Test — *Continued*

Error Code	Test Result	Description/ Recommendation
	FAIL	UDS1 Interface circuit pack failed the CSU Equipment Loopback Test. 1. Retry the **test ds1-loop PCSS ds1/csu-loopback-tests** command. 2. If the ELB test continues to fail, then either the TN464F board, the CSU Module, or the I/O cable between the backplane and the CSU module (or any combination thereof) has failed. Attempt to isolate the problem to one of these areas. Begin by replacing the CSU Module and running the **test ds1-loop PCSS ds1/csu-loopback-tests** command again. 3. If the ELB test continues to fail, then replace the TN464F board and run the **test ds1-loop PCSS ds1/csu-loopback-tests** command again. 4. If the ELB test continues to fail, the problem could be in the I/O cable between the backplane and the CSU module.
	PASS	The ELB test executed successfully. The test pattern was transmitted and received successfully over the connection from the TN464F DS1 board to the near-edge of the 120A1 CSU Module.
0	NO BOARD	The test could not relate the internal ID to the port (no board). This could be due to incorrect translations, no board is inserted, an incorrect board is inserted, or an insane board is inserted. 1. Ensure that the board translations are correct. Execute the **add ds1 PCSS** command to administer the UDS1 interface if it is not already administered. 2. If the board was already administered correctly, check the error log to determine whether the board is hyperactive. If this is the case, the board is shut down. Reseating the board will re-initialize the board. 3. If the board was found to be correctly inserted in step 1, then issue the **busyout board** command. 4. Issue the **reset board** command. 5. Issue the **release busy board** command. 6. Issue the **test board long** command. This should re-establish the linkage between the internal ID and the port.

CSU Repeater Loopback Test (#1211)

This test is destructive.

The CSU Repeater Loopback (RLB) Test causes a loopback at the far-edge of the local 120A1 CSU Module and tests the connection from the TN464F DS1

board to and including the CSU Module circuitry. This test will only be performed if the 120A1 CSU Module is present, administered, and connected to a 1.544 Mbps TN464F DS1 circuit pack on the back of the port carrier.

The test is destructive and can only be initiated by a system technician demanded *test ds1-loop PCSS ds1/csu-loopback-tests* command.

All trunks or ports on the UDS1 Interface circuit pack must be busied out via the system technician **busyout board** command before running the RLB Test.

When the RLB Test is initiated, maintenance software sends an appropriate message to the TN464F UDS1 Interface circuit pack to start the test. The board will set up the RLB loopback, transmit a test pattern, and verify that the pattern is received unaltered through the loopback. If the transmitted and received pattern is different, the test fails.

In addition, the DS1 circuit pack hardware applies a DC current while the test is running in order to detect any broken wires which may not be detected by the loopback pattern itself.

When the test is complete, all trunks or ports on the TN464F UDS1 Interface circuit pack are restored to the in-service state after the **release board** command is entered.

Table 3-375. TEST #1211 CSU Repeater Loopback Test

Error Code	Test Result	Description/ Recommendation
	ABORT	Internal System Error 1. Retry the **test ds1-loop PCSS ds1/csu-loopback-tests** command at 1-minute intervals a maximum of 5 times.
1005	ABORT	CSU Repeater Loopback Test cannot be executed in the current configuration. To run this test, the `Near-End CSU Type` field on the DS1 circuit pack administration form must be set to **integrated**, and the `Bit Rate` field must be set to **1.544** (24-channel operation). 1. Use the **change ds1 PCSS** command to set the `Near-End CSU Type` field on the DS1 circuit pack administration form to **integrated**, and/or change the `Bit Rate` field must be set to **1.544** if the board is to be used in 24-channel configuration. 2. Retry the **test ds1-loop PCSS ds1/csu-loopback-tests** command.

Continued on next page

Table 3-375. TEST #1211 CSU Repeater Loopback Test — *Continued*

Error Code	Test Result	Description/ Recommendation
1015	ABORT	Ports on the UDS1 Interface circuit pack have not been busied out to out-of-service. 1. Enter the **busyout board PCSS** command to put all trunks or ports of the UDS1 Interface circuit pack into the out-of-service state. 2. Retry the command.
1039	ABORT	The UDS1 Interface circuit pack is providing timing for the system. Executing this test could cause major system disruption. If the UDS1 Interface circuit pack needs to be tested, set the synchronization reference to another DS1 Interface circuit pack or to the Tone-Clock circuit pack via the following command sequence: 1. Issue the **disable synchronization-switch** command. 2. Issue the **set synchronization PCSS** command. 3. Issue the **enable synchronization-switch** command. Then rerun the test. If the test aborts again, a different ABORT error code will be generated. Follow the recommended maintenance procedures for that error code.
1950	ABORT	Another loopback/span test is already executing on the DS1 boardor the board is in a network requested loopback mode (Line loopback or Payload loopback). The hardware error log will indicate whether a Customer Loopback Jack Test, Far CSU Loopback Test, or the One-Way Span Test is executing or if the board is in line loopback or payload loopback mode. Only one long-duration loopback/span test can be active at a given time. Thus, if a loopback/span test is already active, that test must be terminated via the **test ds1-loop PCSS end-loopback/span-test** command in order to execute this test.
1951	ABORT	The CSU Repeater Loopback Test could not be executed because the 120A1 CSU Module was not physically installed. Physically connect the 120A1 CSU Module to the TN464F board on the back of the port carrier.

Continued on next page

Table 3-375. TEST #1211 CSU Repeater Loopback Test — *Continued*

Error Code	Test Result	Description/ Recommendation
2000	ABORT	Response to the test was not received within the allowable time period. This may be due to hyperactivity. Error type 1538 in the error log indicates hyperactivity. The hyperactive circuit pack is out of service and one or more of the following symptoms may be exhibited. 1. The UDS1-BD tests (such as test 138 and test 139) are aborting with error code 2000. 2. The tests run on the ports of this circuit pack are returning a no board result. 3. A **busyout** or a **release** command has no affect on the test results. 4. A **list config** command shows that the circuit pack and the ports are properly installed. When hyperactivity occurs, the circuit pack is isolated from the system, and all of the trunks for this circuit pack are placed into the out of service state. The system will try to restore the circuit pack within 15 minutes. When no faults are detected for 15 minutes, the UDS1 interface circuit pack is restored to normal operation. All of the trunks for the UDS1 interface circuit pack are then returned to the in service state. Hyperactivity is often caused by the associated facility. In such a case, faults (such as slips, misframes, or blue alarms) would be entered in the error log. In addition, many hardware errors would be logged against the associated trunk circuits. If the facility is OK and the error occurs again after 15 minutes, replace the circuit pack.
2100	ABORT	Could not allocate the necessary system resources to run this test. 1. Retry the command at 1-minute intervals for a maximum of 5 times.
	FAIL	UDS1 Interface circuit pack failed the CSU Repeater Loopback Test. 1. Retry the *test ds1-loop PCSS ds1/csu-loopback-tests* command. 2. If the RLB test continues to fail, and the CSU Equipment Loopback Test (#1210) passed, then replace the CSU Module.
	PASS	The RLB test executed successfully. The test pattern was transmitted and received successfully over the connection from the TN464F DS1 board to the far-edge of the 120A1 CSU Module.

Continued on next page

Table 3-375. TEST #1211 CSU Repeater Loopback Test — *Continued*

Error Code	Test Result	Description/ Recommendation
0	NO BOARD	The test could not relate the internal ID to the port (no board). This could be due to incorrect translations, no board is inserted, an incorrect board is inserted, or an insane board is inserted. 1. Ensure that the board translations are correct. Execute the **add ds1 PCSS** command to administer the UDS1 interface if it is not already administered. 2. If the board was already administered correctly, check the error log to determine whether the board is hyperactive. If this is the case, the board is shut down. Reseating the board will re-initialize the board. 3. If the board was found to be correctly inserted in step 1, then issue the **busyout board** command. 4. Issue the **reset board** command. 5. Issue the **release busy board** command. 6. Issue the **test board long** command. This should re-establish the linkage between the internal ID and the port.

CPE Loopback Jack Test (#1212)

This test is destructive.

The CPE Loopback Jack (CLJ-LB) Test causes a loopback at the CPE Loopback Jack and tests the building wiring connection between the TN464F DS1 board and the CPE Loopback Jack.

The test is highly destructive and can only be initiated by a system technician demanded ***test ds1-loop PCSS cpe-loopback-jack-test-begin [number-of-bits bit-pattern]*** command. The system technician has the choice of entering a loopback activation code on the command line or using the default code (0x47F).

All trunks or ports on the UDS1 Interface circuit pack must be busied out via the system technician **busyout board** command before running the CSJ Loopback Test.

The CPE Loopback Test has the TN464F UDS1 Interface circuit pack transmit a loopback activation code to the CPE Loopback Jack, waits up to 10 seconds for return of the code to verify the loopback has been established, transmits a framed 3-in-24 test pattern, begins counting bit errors in the received test pattern, and returns a PASS result to indicate that the pattern was successfully

sent. If the loopback is not established within the 10 seconds, the test returns FAIL.

The status of the CPE Loopback test will be available in the hardware error log via error type 3900. Several distinct aux values will be used to give the user information of the status of the test.

The *list measurements ds1 summary* command will display the length of time the test has been running (*Test Duration* field) and number of bit errors detected (*Loopback/Span Test Bit-Error Count* field). If the test pattern is being passed through the loopback cleanly, the number of bit errors should be very low. The command will also display the type of Loopback/Span test executing (*Test* field), the type of pattern generated for the Loopback/Span test (*Pattern* field),and whether the pattern(*i.e.* 3-in-24 *Pattern*) is synchronized (*Synchronized* field).

To terminate the test, enter the *test ds1-loop PCSS end-loopback/span-test* command or the **release board** command. Using the **release board** command will restore all trunks or ports on the TN464F UDS1 Interface circuit pack to the in-service state.

Table 3-376. TEST #1212 CPE Loopback Jack Test

Error Code	Test Result	Description/ Recommendation
	ABORT	Internal System Error 1. Retry the **test ds1-loop PCSS cpe-loopback-jack-test-begin** command at 1-minute intervals a maximum of 5 times.
1005	ABORT	CPE Loopback Jack Test cannot be executed in the current configuration. To run this test, the TN464F or later suffix UDS1 must be administered for 24-channel operation. The `Bit Rate` field on the DS1 circuit pack administration form must be set to **1.544** for 24-channel operation.
1015	ABORT	Ports on the UDS1 Interface circuit pack have not been busied out to out-of-service. 1. Enter the **busyout board PCSS** command to put all trunks or ports of the UDS1 Interface circuit pack into the out-of-service state. 2. Retry the command.

Continued on next page

Table 3-376. TEST #1212 CPE Loopback Jack Test — *Continued*

Error Code	Test Result	Description/ Recommendation
1039	ABORT	The UDS1 Interface circuit pack is providing timing for the system. Executing this test could cause major system disruption. If the UDS1 Interface circuit pack needs to be tested, set the synchronization reference to another DS1 Interface circuit pack or to the Tone-Clock circuit pack via the following command sequence: 1. Issue the **disable synchronization-switch** command. 2. Issue the **set synchronization PCSS** command. 3. Issue the **enable synchronization-switch** command. Then rerun the test. If the test aborts again, a different ABORT error code will be generated. Follow the recommended maintenance procedures for that error code.
1950	ABORT	Another loopback/span test is already executing on the DS1 boardor the board is in a network requested loopback mode (Line loopback or Payload loopback). The hardware error log will indicate whether a Customer Loopback Jack Test, Far CSU Loopback Test, or the One-Way Span Test is executing or if the board is in line loopback or payload loopback mode. Only one long-duration loopback/span test can be active at a given time. Thus, if a loopback/span test is already active, that test must be terminated via the **test ds1-loop PCSS end-loopback/span-test** command in order to execute this test.

Continued on next page

Table 3-376. TEST #1212 CPE Loopback Jack Test — *Continued*

Error Code	Test Result	Description/ Recommendation
2000	ABORT	Response to the test was not received within the allowable time period. This may be due to hyperactivity. Error type 1538 in the error log indicates hyperactivity. The hyperactive circuit pack is out of service and one or more of the following symptoms may be exhibited. 1. The UDS1-BD tests (such as test 138 and test 139) are aborting with error code 2000. 2. The tests run on the ports of this circuit pack are returning a no board result. 3. A **busyout** or a **release** command has no affect on the test results. 4. A **list config** command shows that the circuit pack and the ports are properly installed. When hyperactivity occurs, the circuit pack is isolated from the system, and all of the trunks for this circuit pack are placed into the out of service state. The system will try to restore the circuit pack within 15 minutes. When no faults are detected for 15 minutes, the UDS1 interface circuit pack is restored to normal operation. All of the trunks for the UDS1 interface circuit pack are then returned to the in service state. Hyperactivity is often caused by the associated facility. In such a case, faults (such as slips, misframes, or blue alarms) would be entered in the error log. In addition, many hardware errors would be logged against the associated trunk circuits. If the facility is OK and the error occurs again after 15 minutes, replace the circuit pack.
2100	ABORT	Could not allocate the necessary system resources to run this test. 1. Retry the command at 1-minute intervals for a maximum of 5 times.
2	FAIL	The CLJ-LB test failed because it was not set up properly. The UDS1 interface pack could not successfully put the CPE loopback jack into loopback mode. 1. Rerun the **test ds1-loop PCSS cpe-loopback-jack-test-begin** command. 2. If the test continues to fail, the problem could be with the TN464F board, the CPE loopback jack equipment, or somewhere between. Run the **test ds1-loop PCSS ds1/csu-loopback-tests** command to determine if the loopback tests that are closer to the TN464F board are successful. If any of these tests fail, follow the maintenance strategy that is associated with the test that fails.

Continued on next page

Table 3-376. TEST #1212 CPE Loopback Jack Test — *Continued*

Error Code	Test Result	Description/ Recommendation
3	FAIL	The CPE Loopback Jack Test was not set up properly. The framed 3-in-24 test pattern, generated by the UDS1 Interface circuit pack and looped back through the CPE Loopback Jack, could not be detected properly by the UDS1 circuit pack. 1. Retry the **test ds1-loop PCSS cpe-loopback-jack-test-begin** command. 2. If the CPE Loopback test continues to fail, the problem could be with the TN464F board, the CPE Loopback Jack equipment, or somewhere in between. Run the **test ds1-loop PCSS ds1/csu-loopback-tests** command to see if the loopback tests closer to the TN464F board are successful. If any of those loopback tests fail, follow the maintenance strategy associated with those loopbacks.
	PASS	The CSJ Loopback test has successfully began executing. The test will continue to run until the system technician enters the **test ds1-loop PCSS end-loopback/span-test** command or the **release board PCSS** command.
0	NO BOARD	The test could not relate the internal ID to the port (no board). This could be due to incorrect translations, no board is inserted, an incorrect board is inserted, or an insane board is inserted. 1. Ensure that the board translations are correct. Execute the **add ds1 PCSS** command to administer the UDS1 interface if it is not already administered. 2. If the board was already administered correctly, check the error log to determine whether the board is hyperactive. If this is the case, the board is shut down. Reseating the board will re-initialize the board. 3. If the board was found to be correctly inserted in step 1, then issue the **busyout board** command. 4. Issue the **reset board** command. 5. Issue the **release busy board** command. 6. Issue the **test board long** command. This should re-establish the linkage between the internal ID and the port.

Far CSU Loopback Test (#1213)

This test is destructive.

The Far CSU Loopback (R-LLB) Test causes a loopback at the far-end CSU and tests all circuitry and facilities from the local TN464F DS1 board to the far-end CSU.

The test is destructive and can only be initiated by a system technician demanded *test ds1-loop PCSS far-csu-loopback-test-begin* command.

All trunks or ports on the UDS1 Interface circuit pack must be busied out via the system technician **busyout board** command before running the Far CSU Loopback Test.

If the far-end CSU is not a 120A1 CSU Module, and the UDS1 is administered for ami-zcs line coding, one's density protection must be disabled on the CSU during the test due to the large number of zero's in the 3-in-24 test pattern.

The Far CSU Loopback Test has the TN464F UDS1 Interface circuit pack transmit a loopback activation code to the remote CSU, waits up to 15 seconds for return of the code to verify the loopback has been established, transmits a framed 3-in-24 test pattern, begins counting bit errors in the received test pattern, and returns a PASS result. If the loopback is not established within the 15 seconds, the test fails.

The status of the Far CSU Loopback test will be available in the hardware error log via error type 3901. Several distinct aux values will be used to give the user information of the status of the test.

The **list measurements ds1 summary** command will display the length of time the test has been running (`Test Duration` field) and number of bit errors detected (`Loopback/Span Test Bit-Error Count` field). If the test pattern is being passed through the loopback cleanly, the number of bit errors should be very low. The command will also display the type of Loopback/Span test executing (`Test` field), the type of pattern generated for the Loopback/Span test (`Pattern` field),and whether the pattern(*i.e.* 3-in-24 *Pattern*) is synchronized (`Synchronized` field).

To terminate the test, enter the **test ds1-loop PCSS end-loopback/span-test** command or the **release board** command. Using the **release board** command will restore all trunks or ports on the TN464F UDS1 Interface circuit pack to the in-service state.

Table 3-377. TEST #1213 Far CSU Loopback Test

Error Code	Test Result	Description/ Recommendation
	ABORT	Internal System Error 1. Retry the **test ds1-loop PCSS far-csu-loopback-test-begin** command at 1-minute intervals a maximum of 5 times.
1005	ABORT	Far CSU Loopback Test cannot be executed in the current configuration. To run this, the TN464F or later suffix UDS1 must be administered for 24-channel operation. The "Bit Rate" field on the DS1 circuit pack administration form must be set to "1.544" for 24-channel operation.
1015	ABORT	Ports on the UDS1 Interface circuit pack have not been busied out to out-of-service. 1. Enter the **busyout board PCSS** command to put all trunks or ports of the UDS1 Interface circuit pack into the out-of-service state. 2. Retry the command.
1039	ABORT	The UDS1 Interface circuit pack is providing timing for the system. Executing this test could cause major system disruption. If the UDS1 Interface circuit pack needs to be tested, set the synchronization reference to another DS1 Interface circuit pack or to the Tone-Clock circuit pack via the following command sequence: 1. Issue the **disable synchronization-switch** command. 2. Issue the **set synchronization PCSS** command. 3. Issue the **enable synchronization-switch** command. Then rerun the test. If the test aborts again, a different ABORT error code will be generated. Follow the recommended maintenance procedures for that error code.
1950	ABORT	Another loopback/span test is already executing on the DS1 boardor the board is in a network requested loopback mode (Line loopback or Payload loopback). The hardware error log will indicate whether a Customer Loopback Jack Test, Far CSU Loopback Test, or the One-Way Span Test is executing or if the board is in line loopback or payload loopback mode. Only one long-duration loopback/span test can be active at a given time. Thus, if a loopback/span test is already active, that test must be terminated via the *test ds1-loop PCSS end-loopback/span-test* command in order to execute this test.

Continued on next page

Table 3-377. TEST #1213 Far CSU Loopback Test — *Continued*

Error Code	Test Result	Description/ Recommendation
2000	ABORT	Response to the test was not received within the allowable time period. This may be due to hyperactivity. Error type 1538 in the error log indicates hyperactivity. The hyperactive circuit pack is out of service and one or more of the following symptoms may be exhibited. 1. The UDS1-BD tests (such as test 138 and test 139) are aborting with error code 2000. 2. The tests run on the ports of this circuit pack are returning a no board result. 3. A **busyout** or a **release** command has no affect on the test results. 4. A **list config** command shows that the circuit pack and the ports are properly installed. When hyperactivity occurs, the circuit pack is isolated from the system, and all of the trunks for this circuit pack are placed into the out of service state. The system will try to restore the circuit pack within 15 minutes. When no faults are detected for 15 minutes, the UDS1 interface circuit pack is restored to normal operation. All of the trunks for the UDS1 interface circuit pack are then returned to the in service state. Hyperactivity is often caused by the associated facility. In such a case, faults (such as slips, misframes, or blue alarms) would be entered in the error log. In addition, many hardware errors would be logged against the associated trunk circuits. If the facility is OK and the error occurs again after 15 minutes, replace the circuit pack.
2100	ABORT	Could not allocate the necessary system resources to run this test. 1. Retry the command at 1-minute intervals for a maximum of 5 times.
2	FAIL	The test failed because it was not set up properly. The UDS1 pack could not successfully put the far-end CSU into loopback mode. 1. Rerun the **test ds1-loop PCSS far-csu-loopback-test-begin** command. 2. If the test continues to fail, the problem could be with the TN464F board, the CPE loopback jack equipment, or somewhere between. Run the **test ds1-loop PCSS cpe-loopback-jack-test-begin** command to determine if the CPE loopback jack loopback test is successful. If a CPE loopback jack device is not being used, issue the **test ds1-loop PCSS ds1/csu-loopback-tests** command instead. If the closer loopback test fails, follow the maintenance strategy that is associated with that test; otherwise, escalate the problem.

Continued on next page

Table 3-377. TEST #1213 Far CSU Loopback Test — *Continued*

Error Code	Test Result	Description/ Recommendation
3	FAIL	The Far CSU Loopback Test was not set up properly. The framed 3-in-24 test pattern, generated by the UDS1 Interface circuit pack and looped back through the far-end CSU, could not be detected properly by the UDS1 circuit pack. 1. Retry the **test ds1-loop PCSS far-csu-loopback-test-begin** command. 2. If the Far CSU Loopback test continues to fail with this error code, the problem could be with the TN464F board, the far-end CSU equipment, or somewhere in between. Run the **test ds1-loop PCSS cpe-loopback-jack-test-begin** command to see if the CPE Loopback Jack test which is closer to the TN464F board is successful. (If a CPE Loopback Jack device is not being used, then run the **test ds1-loop PCSS ds1/csu-loopback-tests** command to see if these even closer loopback tests succeed). If the closer loopback test fails, follow the maintenance strategy associated with that loopback. Otherwise, escalate the problem.
	PASS	The Far CSU Loopback test has successfully began executing. The test will continue to run until the system technician enters the **test ds1-loop PCSS end-loopback/span-test** command or the **release board PCSS** command.
0	NO BOARD	The test could not relate the internal ID to the port (no board). This could be due to incorrect translations, no board is inserted, an incorrect board is inserted, or an insane board is inserted. 1. Ensure that the board translations are correct. Execute the **add ds1 PCSS** command to administer the UDS1 interface if it is not already administered. 2. If the board was already administered correctly, check the error log to determine whether the board is hyperactive. If this is the case, the board is shut down. Reseating the board will re-initialize the board. 3. If the board was found to be correctly inserted in step 1, then issue the **busyout board** command. 4. Issue the **reset board** command. 5. Issue the **release busy board** command. 6. Issue the **test board long** command. This should re-establish the linkage between the internal ID and the port.

One-Way Span Test (#1214)

This test is destructive.

The One-Way Span Test allows one-way span testing to and from remote test equipment or another DEFINITY communications system. This will test all circuitry and facilities from the local TN464F DS1 board to the remote test equipment or other DEFINITY communications system.

The test is destructive and can only be initiated by a system technician demanded **test ds1-loop PCSS one-way-span-test-begin** command.

All trunks or ports on the UDS1 Interface circuit pack must be busied out via the system technician **busyout board** command before running the One-Way Span Test.

The One-Way Span Test has the TN464F UDS1 Interface circuit pack transmit a framed 3-in-24 test pattern and attempt to receive and verify the pattern. If the TN464F board receives a framed 3-in-24 test pattern sent from another DEFINITY G3V3 or test equipment at the far-end of the DS1, it will begin counting bit errors within the received pattern.

The status of the One-Way Span test will be available in the hardware error log via error type 3902. Several distinct aux values will be used to give the user information of the status of the test.

The **list measurements ds1 summary** command will display the length of time the test has been running (`Test Duration` field) and number of bit errors detected (`Loopback/Span Test Bit-Error Count` field). If the test pattern is being sent cleanly over the span from the far-end, the number of bit errors should be very low. The `Test Duration` field will show `0` until the test pattern is received from the far-end. Upon receiving the test pattern, the board will begin calculating the test duration and number of bit errors. The command will also display the type of Loopback/Span test executing (*Test Field*), the type of pattern generated for the Loopback/Span test (*Pattern Field*), and whether the 3-in-24 pattern is synchronized (*Synchronized Field*).

To terminate the test, enter the **test ds1-loop PCSS end-loopback/span-test** command or the **release board** command. Using the **release board** command will restore all trunks or ports on the TN464F UDS1 Interface circuit pack to the in-service state.

Table 3-378. TEST #1214 One-Way Span Test

Error Code	Test Result	Description/ Recommendation
	ABORT	Internal System Error 1. Retry the **test ds1-loop PCSS one-way-span-test-begin** command at 1-minute intervals a maximum of 5 times.
1005	ABORT	One-Way Span Test cannot be executed in the current configuration. To run this, the TN464F or later suffix UDS1 must be administered for 24-channel operation. The `Bit Rate` field on the DS1 circuit pack administration form must be set to **1.544** for 24-channel operation.
1015	ABORT	Ports on the UDS1 Interface circuit pack have not been busied out to out-of-service. 1. Enter the **busyout board PCSS** command to put all trunks or ports of the UDS1 Interface circuit pack into the out-of-service state. 2. Retry the command.
1039	ABORT	The UDS1 Interface circuit pack is providing timing for the system. Executing this test could cause major system disruption. If the UDS1 Interface circuit pack needs to be tested, set the synchronization reference to another DS1 Interface circuit pack or to the Tone-Clock circuit pack via the following command sequence: 1. Issue the **disable synchronization-switch** command. 2. Issue the **set synchronization PCSS** command. 3. Issue the **enable synchronization-switch** command. Then rerun the test. If the test aborts again, a different ABORT error code will be generated. Follow the recommended maintenance procedures for that error code.
1950	ABORT	Another loopback/span test is already executing on the DS1 board or the board is in a network requested loopback mode (Line loopback or Payload loopback). The hardware error log will indicate whether a Customer Loopback Jack Test, Far CSU Loopback Test, or the One-Way Span Test is executing or if the board is in line loopback or payload loopback mode. Only one long-duration loopback/span test can be active at a given time. Thus, if a loopback/span test is already active, that test must be terminated via the **test ds1-loop PCSS end-loopback/span-test** command in order to execute this test.

Continued on next page

Table 3-378. TEST #1214 One-Way Span Test — *Continued*

Error Code	Test Result	Description/ Recommendation
2000	ABORT	Response to the test was not received within the allowable time period. This may be due to hyperactivity. Error type 1538 in the error log indicates hyperactivity. The hyperactive circuit pack is out of service and one or more of the following symptoms may be exhibited. 1. The UDS1-BD tests (such as test 138 and test 139) are aborting with error code 2000. 2. The tests run on the ports of this circuit pack are returning a no board result. 3. A **busyout** or a **release** command has no affect on the test results. 4. A **list config** command shows that the circuit pack and the ports are properly installed. When hyperactivity occurs, the circuit pack is isolated from the system, and all of the trunks for this circuit pack are placed into the out of service state. The system will try to restore the circuit pack within 15 minutes. When no faults are detected for 15 minutes, the UDS1 interface circuit pack is restored to normal operation. All of the trunks for the UDS1 interface circuit pack are then returned to the in service state. Hyperactivity is often caused by the associated facility. In such a case, faults (such as slips, misframes, or blue alarms) would be entered in the error log. In addition, many hardware errors would be logged against the associated trunk circuits. If the facility is OK and the error occurs again after 15 minutes, replace the circuit pack.
2100	ABORT	Could not allocate the necessary system resources to run this test. 1. Retry the command at 1-minute intervals for a maximum of 5 times.
	PASS	The One-Way Span test has successfully began transmitting a framed 3-in-24 test pattern. The test will continue to run until the system technician enters the **test ds1-loop PCSS end-loopback/span-test** command or the **release board PCSS** command.

Continued on next page

Table 3-378. TEST #1214 One-Way Span Test — *Continued*

Error Code	Test Result	Description/ Recommendation
0	NO BOARD	The test could not relate the internal ID to the port (no board). This could be due to incorrect translations, no board is inserted, an incorrect board is inserted, or an insane board is inserted. 1. Ensure that the board translations are correct. Execute the **add ds1 PCSS** command to administer the UDS1 interface if it is not already administered. 2. If the board was already administered correctly, check the error log to determine whether the board is hyperactive. If this is the case, the board is shut down. Reseating the board will re-initialize the board. 3. If the board was found to be correctly inserted in step 1, then issue the **busyout board** command. 4. Issue the **reset board** command. 5. Issue the **release busy board** command. 6. Issue the **test board long** command. This should re-establish the linkage between the internal ID and the port.

Inject Single Bit Error Test (#1215)

This test is destructive.

The Inject Single Bit Error Test will cause a single bit error to be sent within an active framed 3-in-24 test pattern.

The test is highly destructive and can only be initiated by a system technician demanded **test ds1-loop PCSS inject-single-bit-error** command. An attempt to use this command will be rejected if none of the three long-duration DS1 loopback/span tests (CPE Loopback Jack Test, Far CSU Loopback Test, One-Way Span Test) are active on a TN464F circuit pack.

All trunks or ports on the UDS1 Interface circuit pack must be busied out via the system technician **busyout board** command before running the Inject Single Bit Error Test.

The **list measurements ds1 summary** command displays the number of bit errors detected (`Loopback/Span Test Bit-Error Count` field). Injecting this single bit error should increment the bit error count of the loopback/span test by one.

Table 3-379. TEST #1215 Inject Single Bit Error Test

Error Code	Test Result	Description/ Recommendation
	ABORT	Internal System Error 1. Retry the **test ds1-loop PCSS inject-single-bit-error** command at 1-minute intervals a maximum of 5 times.
1015	ABORT	Ports on the UDS1 Interface circuit pack have not been busied out to out-of-service. 1. Enter the **busyout board PCSS** command to put all trunks or ports of the UDS1 Interface circuit pack into the out-of-service state. 2. Retry the command.
2000	ABORT	Response to the test was not received within the allowable time period. This may be due to hyperactivity. Error type 1538 in the error log indicates hyperactivity. The hyperactive circuit pack is out of service and one or more of the following symptoms may be exhibited. 1. The UDS1-BD tests (such as test 138 and test 139) are aborting with error code 2000. 2. The tests run on the ports of this circuit pack are returning a no board result. 3. A **busyout** or a **release** command has no affect on the test results. 4. A **list config** command shows that the circuit pack and the ports are properly installed. When hyperactivity occurs, the circuit pack is isolated from the system, and all of the trunks for this circuit pack are placed into the out of service state. The system will try to restore the circuit pack within 15 minutes. When no faults are detected for 15 minutes, the UDS1 interface circuit pack is restored to normal operation. All of the trunks for the UDS1 interface circuit pack are then returned to the in service state. Hyperactivity is often caused by the associated facility. In such a case, faults (such as slips, misframes, or blue alarms) would be entered in the error log. In addition, many hardware errors would be logged against the associated trunk circuits. If the facility is OK and the error occurs again after 15 minutes, replace the circuit pack.
2100	ABORT	Could not allocate the necessary system resources to run this test. 1. Retry the command at 1-minute intervals for a maximum of 5 times.
	PASS	A single bit error has been successfully injected into an active framed 3-in-24 test pattern.

Continued on next page

Table 3-379. TEST #1215 Inject Single Bit Error Test — *Continued*

Error Code	Test Result	Description/ Recommendation
0	NO BOARD	The test could not relate the internal ID to the port (no board). This could be due to incorrect translations, no board is inserted, an incorrect board is inserted, or an insane board is inserted. 1. Ensure that the board translations are correct. Execute the **add ds1 PCSS** command to administer the UDS1 interface if it is not already administered. 2. If the board was already administered correctly, check the error log to determine whether the board is hyperactive. If this is the case, the board is shut down. Reseating the board will re-initialize the board. 3. If the board was found to be correctly inserted in step 1, then issue the **busyout board** command. 4. Issue the **reset board** command. 5. Issue the **release busy board** command. 6. Issue the **test board long** command. This should re-establish the linkage between the internal ID and the port.

End Loopback/Span Test (#1216)

This test is destructive.

The End Loopback/Span Test will terminate an active loopback or span test on a TN464F UDS1 circuit pack. Bit error counting against the received test pattern stream is terminated and sending of the framed 3-in-24 test pattern is halted. If either the CPE Loopback Jack or the far-end CSU is looped, the appropriate loopback deactivate code is sent. If the loopback could not be deactivated, then the test will FAIL and a MINOR alarm will be noted in the alarm log until the loopback is cleared.

The test is highly destructive and can only be initiated by a system technician demanded Since only one of these three different long-duration loopback/span tests can be active at a time, the TN464F circuit pack knows which loopback/span test to terminate.

All trunks or ports on the UDS1 Interface circuit pack must be busied out via the system technician **busyout board** command before running this End Loopback/Span Test.

The **list measurements ds1 summary** command will display the length of time the test ran (`Test Duration` field) and number of bit errors detected (`Loopback/Span Test Bit-Error Count` field).

To restore the trunks or ports on the TN464F UDS1 Interface circuit pack to the in-service state, execute the **release board** command

Table 3-380. TEST #1216 End Loopback/Span Test

Error Code	Test Result	Description/ Recommendation
	ABORT	Internal System Error 1. Retry the **test ds1-loop PCSS end-loopback/span-test** command at 1-minute intervals a maximum of 5 times.
1005	ABORT	End Loopback/Span Test cannot be executed in the current configuration. To run this, the TN464F or later suffix UDS1 must be administered for 24-channel operation. The `Bit Rate` field on the DS1 circuit pack administration form must be set to **1.544** for 24-channel operation.
1015	ABORT	Ports on the UDS1 Interface circuit pack have not been busied out to out-of-service. 1. Enter the **busyout board PCSS** command to put all trunks or ports of the UDS1 Interface circuit pack into the out-of-service state. 2. Retry the command.

Continued on next page

Table 3-380. TEST #1216 End Loopback/Span Test — *Continued*

Error Code	Test Result	Description/ Recommendation
2000	ABORT	Response to the test was not received within the allowable time period. This may be due to hyperactivity. Error type 1538 in the error log indicates hyperactivity. The hyperactive circuit pack is out of service and one or more of the following symptoms may be exhibited. 1. The UDS1-BD tests (such as test 138 and test 139) are aborting with error code 2000. 2. The tests run on the ports of this circuit pack are returning a no board result. 3. A **busyout** or a **release** command has no affect on the test results. 4. A **list config** command shows that the circuit pack and the ports are properly installed. When hyperactivity occurs, the circuit pack is isolated from the system, and all of the trunks for this circuit pack are placed into the out of service state. The system will try to restore the circuit pack within 15 minutes. When no faults are detected for 15 minutes, the UDS1 interface circuit pack is restored to normal operation. All of the trunks for the UDS1 interface circuit pack are then returned to the in service state. Hyperactivity is often caused by the associated facility. In such a case, faults (such as slips, misframes, or blue alarms) would be entered in the error log. In addition, many hardware errors would be logged against the associated trunk circuits. If the facility is OK and the error occurs again after 15 minutes, replace the circuit pack.
2100	ABORT	Could not allocate the necessary system resources to run this test. 1. Retry the command at 1-minute intervals for a maximum of 5 times.
1313	FAIL	The TN464F UDS1 circuit pack could not deactivate the loopback through the Customer Loopback Jack. 1. Retry the **test ds1-loop PCSS end-loopback/span-test** command at 1-minute intervals for a maximum of 5 times.
1314	FAIL	The TN464F UDS1 circuit pack could not deactivate the loopback through the far-end CSU. 1. Make sure that the far-end DS1 is installed if the far-end CSU is a 120A Lucent CSU Module. 2. Retry the **test ds1-loop PCSS end-loopback/span-test** command at 1-minute intervals for a maximum of 5 times.
	PASS	The active long-duration loopback or span test on the TN464F circuit pack was successfully terminated.

Continued on next page

Table 3-380. TEST #1216 End Loopback/Span Test — *Continued*

Error Code	Test Result	Description/ Recommendation
0	NO BOARD	The test could not relate the internal ID to the port (no board). This could be due to incorrect translations, no board is inserted, an incorrect board is inserted, or an insane board is inserted. 1. Ensure that the board translations are correct. Execute the **add ds1 PCSS** command to administer the UDS1 interface if it is not already administered. 2. If the board was already administered correctly, check the error log to determine whether the board is hyperactive. If this is the case, the board is shut down. Reseating the board will re-initialize the board. 3. If the board was found to be correctly inserted in step 1, then issue the **busyout board** command. 4. Issue the **reset board** command. 5. Issue the **release busy board** command. 6. Issue the **test board long** command. This should re-establish the linkage between the internal ID and the port.

ICSU Status LEDs Test (#1227)

The TN464F UDS1 circuit pack has four status LEDs on the faceplate in addition to the three standard faceplate LEDs. These four status LEDs are associated with the 120A1 Channel Service Unit (CSU) Module that can be connected to the TN464F board via the I/O connector panel on the back of the port carrier. The TN464F circuit pack combined with Lucent's new 120A1 CSU Module forms an Integrated CSU (ICSU).

This test is a visual test. It will light the four status LEDs red for 5 seconds, then light them green for 5 seconds, then light them yellow for 5 seconds, then turn the LEDs off and returns control of the status LEDs to the circuit pack.

This test will only be executed on a TN464F or later suffix UDS1 circuit packs administered for 24-channel operation (1.544 bit rate).

If the 120A1 CSU Module is not physically installed, the status LEDs are always off and this test will abort.

Table 3-381. TEST #1227 ICSU Status LEDs Test

Error Code	Test Result	Description/ Recommendation
	ABORT	Internal System Error 1. Retry the command at 1-minute intervals a maximum of 5 times.
1005	ABORT	The ICSU Status LEDs test can not be executed for the current configuration. The test applies only to TN464F or later UDS1 circuit packs administered for 24-channel operation (1.544 bit rate). 1. If the circuit pack is a TN464F or later suffix UDS1 circuit pack, then retry the command. 2. If the test continues to abort, escalate the problem.
1951	ABORT	The ICSU Status LEDs Test can not be executed because a 120A1 or later suffix CSU Module is not physically installed. If using a 120A1 CSU Module, physically connect it to the TN464F board on the back of the port carrier. Otherwise, ignore this abort.
2100	ABORT	Could not allocate the necessary system resources to run this test. 1. Retry the command at 1-minute intervals for a maximum of 5 times.
2500	ABORT	Internal System Error 1. Retry the command.
	PASS	The ICSU Status LEDs test executed successfully. A PASS result, however, does not necessarily mean that the status LEDs behaved properly. It only means that the software successfully attempted to light the status LEDs. This is a visual test. The service technician must visually exam the behavior of the LEDs while the test is running. The LEDs are functioning properly if the four status LEDs are lit red for 5 seconds, then lit green for 5 seconds, then lit yellow for 5 seconds. If the LEDs behave differently, the board should be replaced at the customer's convenience.

Continued on next page

Table 3-381. TEST #1227 ICSU Status LEDs Test — *Continued*

Error Code	Test Result	Description/ Recommendation
0	NO BOARD	The test could not relate the internal ID to the port (no board). This could be due to incorrect translations, no board is inserted, an incorrect board is inserted, or an insane board is inserted. 1. Ensure that the board translations are correct. Execute the **add ds1 PCSS** command to administer the UDS1 interface if it is not already administered. 2. If the board was already administered correctly, check the error log to determine whether the board is hyperactive. If this is the case, the board is shut down. Reseating the board will re-initialize the board. 3. If the board was found to be correctly inserted in step 1, then issue the **busyout board** command. 4. Issue the **reset board** command. 5. Issue the **release busy board** command. 6. Issue the **test board long** command. This should re-establish the linkage between the internal ID and the port.

WAE-PORT (Wideband Access Endpoint Port)

MO Name (in Alarm Log)	Alarm Level	Initial Command to Run	Full Name of MO
WAE-PORT[1]	MINOR	test access-endpoint <extension> l	Wideband Access Endpoint Port
WAE-PORT	WARNING	test access-endpoint <extension>	Wideband Access Endpoint Port

1. For additional repair information, see also UDS1-BD (UDS1 Interface Circuit Pack) Maintenance documentation.

The Wideband Switching capability supports end-to-end connectivity between customer endpoints at data rates from 128 to 1536 kbps over T1 facilities and to 1984 kbps over E1 facilities. DEFINITY switching capabilities are extended to support wideband calls comprised of multiple DS0s that are switched end-to-end as a single entity.

The Wideband Switching capability extends the Administered Connections feature to include non-signaling Wideband Access Endpoints. Endpoint application equipment with direct T1 or E1 interfaces may connect directly to the switch's line-side facilities. Application equipment without T1 or E1 interfaces requires a Terminal Adapter, such as a DSU/CSU. The terminal adapter or endpoint application equipment is connected to the Universal DS1 circuit pack (TN464C). These endpoints are administered as Access Endpoints, and they have no signaling interface to the switch. Instead, they simply transmit and receive data. (Some applications detect and respond to the presence or absence of data.) Calls are initiated from these endpoints using the Administered Connections feature.

Multiple Access Endpoints on one line-side UDS1 circuit pack (TN464C) facility are separate and distinct within the facility, and the endpoint application equipment must be administered to send and receive the correct data rate over the correct DS0s. All Administered Connections originating from Access Endpoints use the entire bandwidth administered for the Access Endpoint. An incoming call of a different data rate then that administered for the Access Endpoint cannot be routed to the Access Endpoint.

Although Wideband Access Endpoints are used primarily for line-side facilities, these endpoints can also be administered on network DS1 facilities to connect DEFINITY to non-switched network services, such as the AT&T fractional T-1 service. An example of this is the AT&T Static Integrated Network Access, where a trunk group to AT&T 4Ess Switched Services shares an access T-1 facility with a Wideband Access Endpoint. In this case, the Wideband Access Endpoint is connected to the AT&T fractional T-1 service, and it does not terminate on local

endpoint equipment but is connected to a far-end CPE (for example, another DEFINITY PBX) via the dedicated fractional T-1. All Wideband Access Endpoint functionality and operation is identical on both line-side and network facilities. However, because maintenance capabilities are limited to the Wideband Access Endpoint interface, and because faults can occur end-to-end, troubleshooting procedures based on an end-to-end view of the network is required.

Wideband Access Endpoint Port maintenance provides a strategy for maintaining a Wideband Access Endpoint Port via a port on the Universal DS1 interface circuit pack hardware. The maintenance strategy involves logging Wideband Access Endpoint Port hardware errors, running tests for port initialization, periodic and scheduled maintenance, system technician-demanded tests, and alarm escalation and resolution. Two different port service states are specified in the Wideband Access Endpoint Port maintenance. These states include *out-of-service*, where the port is in a deactivated state and cannot be used for calls, and *in-service*, where the port is in an activated state and can be used for calls. If the Universal DS1 Interface circuit pack (TN464C) is out-of-service, all ports on the Universal DS1 Interface circuit pack (TN464C) are placed into the out-of-service state.

Hardware Error Log Entries and Test to Clear Values

Wideband Access Endpoint Maintenance Error Log Entries

Error Type	Aux Data	Associated Test	Alarm Level	On/Off Board	Test to Clear Value
0[1]	0	Any	Any	Any	test access-endpoint <extension> sh r 1
18 (a)	0	busyout access-endpoint	WARNING	OFF	release access-endpoint <extension>
130 (b)		None	WARNING	ON	test access-endpoint <extension>
1281 (c)		Conference Circuit (Test #7)	MINOR	ON	test access-endpoint <extension> l r 4
1537 (d)		NPE Crosstalk Test (#6)	MINOR	ON	test access-endpoint <extension> l r 3
1793 (e)		None			test board PCSS long
3840 (f)	Any	Port Audit and Update (Test #36)			

1. Run the Short Test Sequence first. If all tests pass, run the Long Test Sequence. Refer to the appropriate test description and follow the recommended procedures.

Notes:

a. The wideband access endpoint has been busied out by a **busyout access-endpoint <extension>** command. No calls can be made to this extension.

b. The circuit pack has been removed, or it has been insane for more than 11 minutes. To clear the error, reinsert or replace the circuit pack.

c. The Conference Circuit Test (#7) failed on this port. See Test #7 for repair procedures.

d. The NPE Crosstalk Test (#6) failed on this port. See Test #6 for repair procedures.

e. There was a failure of the TN464C UDS1 Interface circuit pack. See UDS1-BD Maintenance documentation for details.

f. The Port Audit and Update Test (#36) failed due to an internal system error. Enter the **status access-endpoint <extension>** command and verify the status of the port. If the wideband access endpoint is out-of-service, enter the **release access-endpoint <extension>** command to put it back to in-service. Retry the test command. If the test continues to fail, escalate the problem.

System Technician-Demanded Tests: Descriptions and Error Codes

Always investigate tests in the order presented in the table below when inspecting errors in the system. By clearing error codes associated with the *NPE Crosstalk Test*, for example, you may also clear errors generated from other tests in the testing sequence.

Order of Investigation	Short Test Sequence	Long Test Sequence	D/ND[1]
NPE Crosstalk Test (#6)		X	ND
Conference Circuit Test (#7)		X	ND
Port Audit and Update Test (#36)	X	X	ND

1. D = Destructive; ND = Nondestructive

NPE Crosstalk Test (#6)

One or more Network Processing Elements (NPEs) reside on each circuit pack with a TDM Bus interface. (The TN464C UDS1 circuit pack has one SCOTCH-NPE chip instead of several NPE chips). The NPE controls port connectivity and gain, and it provides conferencing functions on a per-port basis. The NPE Crosstalk Test verifies that this port's NPE channel talks on the

selected time slot and that it never crosses over to time slots reserved for other connections. If the NPE is not working correctly, one-way and noisy connections may be observed. This test is usually only part of a port's Long Test Sequence, and it takes between 20 and 30 seconds to complete.

Table 3-382. TEST #6 NPE Crosstalk Test

Error Code	Test Result	Description/ Recommendation
	ABORT	System resources required for this test are not available. 1. Retry the command at 1-minute intervals a maximum of 5 times.
1000	ABORT	System resources required to run this test are not available. The port may be in use on a valid call. Use the **status access-endpoint <extension>** command to determine when the port is available for testing. 1. Retry the command at 1-minute intervals a maximum of 5 times.
1001	ABORT	System resources required for this test are not available. 1. Retry the command at 1-minute intervals a maximum of 5 times.
1002	ABORT	The system could not allocate time slots for the test. The system may be under heavy traffic conditions, or it may have time slots that are out-of-service due to TDM-BUS errors. The **status health** command can be used to determine if the system is experiencing heavy traffic. Refer to TDM-BUS Maintenance documentation to diagnose any active TDM-BUS errors. 1. If system has no TDM-BUS errors, and if it is not handling heavy traffic, repeat the test at 1-minute intervals a maximum of 5 times.
1003	ABORT	The system could not allocate a tone receiver for the test. The system may be oversized for the number of Tone Detectors present, or some Tone Detectors may be out-of-service. The **list measurement tone-receiver** command displays information on the system's tone receivers. 1. Look for TTR-LEV errors in the Error Log. If errors are present, refer to TTR-LEV Maintenance documentation. 2. Look for TONE-PT errors in the Error Log. If errors are present, refer to TONE-PT Maintenance documentation. 3. If neither condition exists, retry the test at 1-minute intervals a maximum of 5 times.
1004	ABORT	The port has been seized by a user for a valid call. Use the **status access-endpoint <extension>** command to determine when the port is available for testing. The port is available when it is in the **in-service/idle** state. 1. Retry the command at 1-minute intervals a maximum of 5 times.

Continued on next page

Table 3-382. TEST #6 NPE Crosstalk Test — *Continued*

Error Code	Test Result	Description/ Recommendation
1020	ABORT	The test did not run due either to a previously existing error on the specific port or to a more general circuit pack error. 1. Examine the Error Log for existing errors against this port or the circuit pack, and attempt to diagnose the already existing error.
2000	ABORT	Response to the test request was not received within the allowable time period.
2100	ABORT	System resources required for this test are not available. 1. Retry the command at 1-minute intervals a maximum of 5 times.
	FAIL	The NPE of the tested port was found to be transmitting in error. This causes noisy and unreliable connections. 1. Replace the circuit pack.
	PASS	The port is correctly using its allocated time slots. 1. User-reported troubles on this port should be investigated by using other port tests and by examining the terminal adapter or the external wiring.

Conference Circuit Test (#7)

One or more Network Processing Elements (NPEs) reside on each circuit pack with a TDM Bus interface. (The TN464C UDS1 circuit pack has one SCOTCH-NPE chip instead of several NPE chips). The NPE controls port connectivity and gain, and it provides conferencing functions on a per-port basis. The Conference Circuit Test verifies that the NPE channel for the port being tested can correctly perform the conferencing function. The NPE is instructed to listen to several different tones and to conference the tones together. The resulting signal is then measured by a Tone Detector port. If the level of the tone is within a certain range, the test passes.

Table 3-383. TEST #7 Conference Circuit Test

Error Code	Test Result	Description/ Recommendation
	ABORT	System resources required for this test are not available. 1. Retry the command at 1-minute intervals a maximum of 5 times.

Continued on next page

Table 3-383. TEST #7 Conference Circuit Test — *Continued*

Error Code	Test Result	Description/ Recommendation
1000	ABORT	System resources required to run this test are not available. The port may be in use on a valid call. Use the **status access-endpoint <extension>** command to determine when the port is available for testing.
1004	ABORT	The port has been seized by a user for a valid call. Use the **status access-endpoint <extension>** command to determine when the port is available for testing. The port is available when it is in the **in-service/idle** state. 1. Retry the command at 1-minute intervals a maximum of 5 times.
1020	ABORT	The test did not run due either to a previously existing error on the specific port or to a more general circuit pack error. 1. Examine the Error Log for existing errors against this port or circuit pack, and attempt to diagnose the previously existing error.
2000	ABORT	Response to the test request was not received within the allowable time period.
2100	ABORT	System resources required for this test are not available. 1. Retry the command at 1-minute intervals a maximum of 5 times.
	FAIL	The NPE of the tested port did not conference the tones correctly. This causes noisy and unreliable connections. Although wideband calls do not use the conferencing feature on the NPE, this failure indicates problems with the circuit pack hardware. 1. Replace the circuit pack.
	PASS	The port can correctly conference multiple connections. 1. User-reported troubles on this port should be investigated by using other port tests and by examining the terminal adapter or the external wiring.

Port Audit and Update Test (#36)

This test sends port level translation data from switch processor to the UDS1 Interface circuit pack to ensure that the wideband access endpoint port's translation is correct.

Table 3-384. TEST #36 Audit and Update Test

Error Code	Test Result	Description/ Recommendation
	ABORT	Internal System Error. 1. Retry the command at 1-minute intervals a maximum of 5 times.
1006	ABORT	The port is out-of-service. If the port is busied out: 1. Issue **release access-endpoint <extension>** command to put the port back into in-service. 2. Retry the test command. If the port is not busied out: 1. Check the error and alarm logs for WAE-PORT and UDS1-BD errors and alarms. Follow the recommended repair procedures.
2000	ABORT	Response to the test request was not received within the allowable time period.
2100	ABORT	Could not allocate the necessary system resources to run this test. 1. Retry the command at 1-minute intervals a maximum of 5 times.
	FAIL	Internal system error. 1. Retry the command at 1-minute intervals a maximum of 5 times.
	PASS	Port translation has been updated successfully.

XXX-BD (Common Port Circuit Pack)

The Common Port Circuit Pack Maintenance is a set of common tests used by all the circuit packs with the generic hardware that interfaces with the TDM bus. Circuit packs included in this category are listed on the following pages.

MO Name (in Alarm Log)	Alarm Level	Initial Command to Run[1]	Full Name of MO
XXX-BD[2]	MAJOR	test board PCSS	Common Port Circuit Pack Maintenance
XXX-BD[2]	MINOR	test board PCSS	Common Port Circuit Pack Maintenance
XXX-BD[2]	WARNING	test board PCSS	Common Port Circuit Pack Maintenance

1. Where P is the port network number (1); C is the carrier designation (for example, A, B, or C); and SS is the address of the slot in the carrier where the circuit pack is located (for example, 01, 02,...etc.)
2. Refer to the appropriate circuit pack documentation to get the correct MO name displayed in this field. It usually ends with BD.

Notes:

a. All circuit pack suffixes (B,C, D, etc.) are also supported by the XXX-BD (Common Port Circuit Pack) Maintenance documentation.

b. The XXX-BD designation is also used in the SAT display in the case where a **reset board command** is issued to a circuit pack type which is in conflict to the actual circuit pack type administered for that slot or when a **reset board** command is issued to an empty circuit pack slot.

When any of the Common Port Circuit Packs (except the TN754 Digital Line and TN758 Pooled Modem circuit packs) are physically removed from the backplane, no alarm is logged for approximately 11 minutes. In the case of the Digital Line and Pooled Modem circuit packs, approximately 21 minutes elapse before an alarm is logged. When a circuit pack that has been removed is alarmed, the alarm type is minor and is classified as an on-board alarm. The time delay permits maintenance activity to be performed without triggering an additional alarm. **An alarm is logged only against a Common Port Circuit Pack on which ports have been administered.** See the next Note.

NOTE:
In a heavily loaded system, the interval between the removal of a Common Port Circuit Pack and the logging of the alarm may be several minutes longer.

XXX-BD Common Circuit Packs

The following list of circuit packs are listed by apparatus code, including circuit packs used in non-United States installations. .

Table 385. XXX-BD Common Circuit Packs

Apparatus Code	Name	Type
(TN566) (TN567)	DEFINITY AUDIX R3 System	Port Assembly
(TN2208)	Call Visor ASAI over the DEFINITY (LAN) Gateway R1	Port Assembly
TN417	Auxiliary Trunk	Port
TN429	Direct Inward/Outward Dialing (DIOD) Trunk	Port
TN433	Speech Synthesizer	Service
TN436B	Direct Inward Dialing Trunk	Port
TN437	Tie Trunk	Port
TN438B	Central Office Trunk	Port
TN439	Tie Trunk	Port
TN447	Central Office Trunk	Port
TN457	Speech Synthesizer	Service
TN458	Tie Trunk	Port
TN459B	Direct Inward Dialing Trunk	Port
TN464C/ D/E/ F	DS1/E1 Interface - T1, 24 Channel - E1, 32 Channel	Port
TN465/B/C	Central Office Trunk	Port
TN467	Analog Line	Port
TN468B	Analog Line	Port
TN479	Analog Line	Port
TN497	Tie Trunk	Port
TN722B	Digital Signal Level 1 Tie Trunk	Port
TN725B	Speech Synthesizer	Service
TN726/B	Data Line	Port
TN735	MET Line	Port
TN742	Analog Line	Port
TN744/B/C	Call Classifier - Detector	Service
TN744D	Call Classifier - Detector - Multi-Country	Service
TN746/B	Analog Line	Port

Continued on next page

Table 385. XXX-BD Common Circuit Packs — *Continued*

Apparatus Code	Name	Type
TN747B	Central Office Trunk	Port
TN750/B/C	Announcement	Service
TN753	Direct Inward Dialing Trunk	Port
TN754/B	Digital Line 4-Wire DCP	Port
TN758	Pooled Modem	Port
TN760B/C/D	Tie Trunk	Port
TN762B	Hybrid Line	Port
TN763B/C/D	Auxiliary Trunk	Port
TN767B/C/D/E	DS1 Interface - T1, 24 Channel	Port
TN769	Analog Line	Port
TN798	Processor	Control
TN2135	Analog Line	Port
TN2136	Digital Line 2-Wire DCP	Port
TN2138	Central Office Trunk	Port
TN2139	Direct Inward Dialing Trunk	Port
TN2140/B	Tie Trunk	Port
TN2144	Analog Line	Port
TN2146	Direct Inward Dialing Trunk	Port
TN2147/C	Central Office Trunk	Port
TN2149	Analog Line	Port
TN2180	Analog Line	Port
TN2181	Digital Line 2-wire DCP	Port
TN2182/B	Tone-Clock - Tone Detector and Call Classifier	Control
TN2183	Analog Line	Port
TN2184	DIOD Trunk	Port
TN2199	Central Office Trunk	Port
TN2224	Digital Line, 24-Port, 2-Wire DCP	Control

Hardware Error Log Entries and Test to Clear Values

Common Port Circuit Pack Maintenance Error Log Entries

Error Type	Aux Data	Associated Test	Alarm Level	On/Off Board	Test to Clear Value
0[1]	0	Any	Any	Any	test board PCSS sh r 1
1(a)	0	Circuit pack removed or SAKI Sanity Test (#53)	MINOR	ON	
18(b)	0	busyout board PCSS	WARNING	OFF	release board PCSS
23(c)	0	None	WARNING	OFF	
125 (d)		None	MINOR	ON	
257	65535	Control Channel Test (#52)	MINOR	ON	test board PCSS sh r 20
257 (e)	Any	None			
267 (d)	0	None	WARNING	ON	
513 (f)	Any	None	MINOR	ON	test board PCSS sh
769 (g)	4358	None			
1025 (h)	4363	NPE Audit Test (#50)			test board PCSS l r 20
1281 (i)		Ringing Application Test (#51)	MINOR	ON	test board PCSS r 2
1538 (j)	Any	None	WARNING/ MINOR	ON	
1793 (k)		Neon Test (#220)	MINOR	ON	test board PCSS r 2
3840 (l)	Any	None			
3999 (m)	Any	None			

1. Run the Short Test Sequence first. If all tests pass, run the Long Test Sequence. Refer to the appropriate test description and follow the recommended procedures.

Notes:

a. This error indicates the circuit pack totally stopped functioning or it was physically removed from the system. This error type is not applicable to ANN-BD, DETR-BD, S-SYN-BD, M/T-BD, or CLSFY-BD.

NOTE:
The alarm is logged approximately 11 minutes after the circuit pack has been removed and/or SAKI Sanity Test (#53) fails.

If the circuit pack is not in the system, insert a circuit pack (in the same slot as the error indicates) to resolve this error. Or, if the circuit pack is in the system and the red LED is on, follow the instructions for "Red (alarm)" in the ''Control and Port Circuit Pack Status LEDs'' section in Chapter 1, ''Maintenance for R6csi Compact Modular Cabinets''

b. This error indicates the circuit pack has been busied out. Release the circuit pack via **release board PCSS**.

c. The circuit pack has been logically administered but not physically installed. The alarm should clear when the circuit pact is installed.

   If the circuit pack is already installed:

   1. Run **test board PCSS long** and look at any test failures or error codes generated.
   2. If the test does not clear error 23, then execute **reset board PCSS** and run the long test again.
   3. If the reset/test does not clear error 23, replace the circuit pack.

d. A wrong circuit pack is inserted in the slot where this circuit pack is logically administered. To resolve this problem, either remove the wrong circuit pack and insert the logically administered circuit pack OR use the **change circuit-pack** command to readminister this slot to match the circuit pack inserted.

e. This error indicates transient communication problems with this circuit pack. This error is not service-affecting and no action is required.

f. This error, when reported with Aux data in the range of 4352 to 4358, indicates that the circuit pack has reported an on-board hardware failure. The circuit pack continuously tests the hardware and report the results approximately every 10 minutes. If the hardware problem is resolved, the "leaky bucket" strategy should clear the alarm in approximately 30 minutes. However, if the alarm does NOT clear in 30 minutes, the circuit pack should be replaced.

g. This error can be ignored, but look for other errors on this circuit pack.

h. This error is not service-affecting and no action is required.

i. This error indicates that no ringing current is detected. Run Test #51, Ringing Application Test, and follow the procedures for Test #51. This error is only applicable to Analog Line circuit packs.

j. The hyperactive circuit pack is out-of-service and may exhibit one or more of the following symptoms:

   1. The common circuit pack level tests such as Test #51 and/or Test #220 are aborting with error code 2000.
   2. The tests run on the ports of this circuit pack are returning with a NO-BOARD.
   3. A busyout/release of the circuit pack has no affect on test results.

4. A **list configuration** command shows that the circuit pack and ports are properly installed.

If the XXX-BD is not a TN754 Digital Line Circuit Pack (DIG-BD), and if this error happens again within 15 minutes, replace the circuit pack. If the XXX-BD is a TN754 Digital Line Circuit Pack (DIG-BD), check the alarm level. If the alarm level is a WARNING, this indicates that users are probably causing the hyperactivity by playing with their digital stations. If the circuit pack is really hyperactive, this alarm is upgraded to a MINOR alarm within one hour. If the alarm level is a MINOR alarm, replace the circuit pack.

k. This error indicates that no neon current is detected. Run Test #220, Neon Test, and follow the procedures for Test #220. This error is applicable only to TN769 and TN746 Analog Line circuit packs.

l. This error is not service-affecting and no action is required.

m. Error type 3999 indicates that the circuit pack sent a large number of control channel messages to the switch within a short period of time. If error type 1538 is also present, then the circuit pack was taken out-of-service due to hyperactivity. If error type 1538 is not present, then the circuit pack has not been taken out-of-service, but it has generated 50% of the messages necessary to be considered hyperactive. This may be completely normal during heavy traffic periods. However, if this error type is logged when the circuit pack is being lightly used, it may indicate a problem with the circuit pack or the equipment attached to it.

System Technician-Demanded Tests: Descriptions and Error Codes

Always investigate tests in the order presented in the table below when inspecting errors in the system. By clearing error codes associated with the *Control Channel Loop Around Test*, for example, you may also clear errors generated from other tests in the testing sequence.

Order of Investigation	Short Test Sequence	Long Test Sequence	Reset Board Sequence	D/ND[1]
NPE Audit Test (#50)		X		ND
Ringing Application Test (#51) (a)	X	X		ND
Control Channel Loop Around Test (#52)	X	X		ND
SAKI Sanity Test (#53)		X	D	
Neon Test (#220) (b)	X	X		ND

1. D = Destructive; ND = Nondestructive

Notes:

a. Only applicable to Analog Line circuit packs.

b. Only applicable to TN746 and TN769 Analog Line circuit packs.

NPE Audit Test (#50)

The system sends a message to the on-board microprocessor to update the network connectivity translation for all the Network Processing Elements (NPEs) on the circuit pack.

Table 3-386. TEST #50 NPE Audit Test

Error Code	Test Result	Description/ Recommendation
none or 2100	ABORT	System resources required for this test are not available.
1019	ABORT	Test already in progress.
	FAIL	Internal System Error. 1. Retry the command at 1-minute intervals a maximum of 5 times.
	PASS	The circuit pack's NPEs have been updated with their translation.
	EXTRA BD	Certain circuit packs have limitations on how many circuit packs can be in the system such as the Call Classifier (TN744). The Call Classifier allow only 10 circuit packs in each system. All additional circuit packs return EXTRA-BD and should be removed.
any	NO BOARD	This is normal if the test is being done when (a) the circuit pack is not physically in the system or (b) the system is booting up. Otherwise, there is some inconsistency between the physical configuration and the data kept in the system. 1. Verify that the circuit pack is physically in the system. 2. Verify that the system is not in a stage of booting up. 3. Retry the command at 1-minute intervals for a maximum of 5 times.

Ringing Application Test (#51)

This test checks the ringing application circuitry common to all ports on an Analog Line circuit pack.

Table 3-387. TEST #51 Ringing Application Circuit Test

Error Code	Test Result	Description/ Recommendation
1000 or 2100	ABORT	Could not allocate the necessary system resources to run test.
	ABORT	Could not allocate the necessary system resources to run test. The circuit pack is not installed. Internal System Error.
2000	ABORT	There was no response from the board. 1. If error type 1538 (hyperactivity) is present in the error log, follow the maintenance strategy that is recommended for this error type. 2. Run the **busyout board**, **reset board**, and **release busy board** commands,and then retest. 3. If the test still aborts, dispatch with the circuit pack. 4. Check the off-board wiring and the terminal, and, if there are no problems found, replace the circuit pack.
1004	ABORT	The port was seized by a valid call during the test. The test has been aborted. Use the **display port PCSSpp** command to determine the station extension. Use the **status station** command to determine the service state of the port. If the service state indicates that the port is in use, the port is unavailable for certain tests. You must wait until the port is idle before retesting. 1. Retry the command at 1-minute intervals a maximum of 5 times.
1008	ABORT	Could not allocate a ringing circuit for one of the following reasons: all the ringing circuits are in use; the ringing generator is defective; ringing generator is not wired correctly. 1. If the test continues to abort, look for RING-GEN error in Error Log. a. If there are RING-GEN errors, refer to RING-GEN Maintenance documentation and try to resolve any problem(s). Go to Step 2. b. If there are no RING-GEN errors, and the test continues to abort, issue the **test board PCSS** command on other TN742, TN769, or TN746 Analog circuit packs. If an ABORT with error code 1008 occurs for this test on other circuit packs as well, the ringing generator may be defective or may not be wired properly. Refer to RING-GEN Maintenance documentation for details. If an ABORT with error code 1008 does NOT occur on the other ports, then all four ring generators are in use. Exit from this documentation. 2. Retry the command.

Continued on next page

Table 3-387. TEST #51 Ringing Application Circuit Test — *Continued*

Error Code	Test Result	Description/ Recommendation
	FAIL	No ringing current is detected. The ringing application circuitry on this circuit pack probably is not healthy. 1. Retry the command again. 2. If the test continues to fail, look for RING-GEN error in Error Log. a. If there are RING-GEN errors, refer to the RING-GEN Maintenance documentation and try to resolve any problem(s). b. If there are no RING-GEN errors, replace the circuit pack. 3. Retry the command again.
	PASS	Ringing current is detected or this vintage of the Analog Line circuit pack does not support the Ringing Application Circuit Test. Analog Line circuit packs that DO NOT support Test #51 include TN742 Vintage 3 and earlier.
any	NO BOARD	This is normal if the test is being done when (a) the circuit pack is not physically in the system or (b) the system is booting up. Otherwise, there is some inconsistency between the physical configuration and the data kept in the system. 1. Verify that the circuit pack is physically in the system. Verify that the system is not in a stage of booting up. Retry the command at 1-minute intervals for a maximum of 5 times.

Control Channel Loop Around Test (#52)

This test queries the circuit pack for its circuit pack code and vintage and verifies its records.

Table 3-388. TEST #52 Control Channel Loop Around Test

Error Code	Test Result	Description/ Recommendation
none or 2100	ABORT	System resources required for this test are not available. 1. Retry the command at 1-minute intervals a maximum of 5 times.

Continued on next page

Table 3-388. TEST #52 Control Channel Loop Around Test — *Continued*

Error Code	Test Result	Description/ Recommendation
	FAIL	The test failed because the circuit pack failed to return the circuit pack code or vintage. 1. Retry the command for a maximum of 5 times. 2. If the test still fails, issue the **busyout board**, **reset board**, and **release busy board** commands, and then retest. 3. If the problem continues, replace the circuit pack. 4. Run the test again.
	PASS	Communication with this circuit pack is successful.
any	NO BOARD	This is normal if the test is being done when (a) the circuit pack is not physically in the system or (b) the system is booting up. Otherwise, there is some inconsistency between the physical configuration and the data kept in the system. 1. Verify that the circuit pack is physically in the system. 2. Verify that the system is not in a stage of booting up. 3.) Retry the command at 1-minute intervals for a maximum of 5 times.

SAKI Sanity Test (#53)

This test is destructive.

This test resets the circuit pack.

This test is executed as part of the long test sequence only for the Tone-Clock circuit pack and DS1 interface circuit packs. All other common circuit packs can be reset via the **reset board PCSS** command. The **reset** command executes this test.

Table 3-389. TEST #53 SAKI Sanity Test

Error Code	Test Result	Description/ Recommendation
none	ABORT	System resources required for this test are not available. 1. Retry the command at 1-minute intervals a maximum of 5 times.

Continued on next page

Table 3-389. TEST #53 SAKI Sanity Test — *Continued*

Error Code	Test Result	Description/ Recommendation
1005	ABORT	Wrong circuit pack configuration to run this test. This error applies only to DS1 interface circuit packs. It means the DS1 interface circuit pack is providing timing for the system and, therefore, it cannot be reset without major system disruptions. 1. If the circuit pack needs to be reset, set synchronization to another DS1 interface circuit pack or the Tone-Clock circuit pack and try again. Refer to SYNC (Synchronization) Maintenance documentation.
1015	ABORT	Port is not out-of-service. 1. Busy out the circuit pack. 2. Execute command again.
2100	ABORT	System resources required for this test are not available. 1. Retry the command at 1-minute intervals a maximum of 5 times.
1	FAIL	The circuit pack failed to reset.
2	FAIL	The circuit pack failed to restart. 1. Execute command again. 2. If the problem persists, replace the circuit pack.
	PASS	The circuit pack initializes correctly. 1. Run the Short Test Sequence.
any	NO BOARD	This is normal if the test is being done when (a) the circuit pack is not physically in the system or (b) the system is booting up. Otherwise, there is some inconsistency between the physical configuration and the data kept in the system. 1. Verify that the circuit pack is physically in the system. 2. Verify that the system is not in a stage of booting up. 3. Retry the command at 1-minute intervals for a maximum of 5 times.

Neon Test (#220)

This test checks the voltage required to light the neon lamp on an analog terminal. A relay connects a 120V DC source from the backplane of the circuit pack onto the voltage bus, and another relay connects a 2K shunt from the bus to ground. Current in the line is then monitored to determine if the voltage is present.

The neon test runs only for TN746 and TN769 Analog circuit packs. If the circuit pack is not a TN746 or TN769, the test returns PASS, but there is no testing done to the circuit pack.

Table 3-390. TEST #220 Neon Test

Error Code	Test Result	Description/ Recommendation
1004	ABORT	The port was seized by a valid call during the test. The test has been aborted. Use the **display port PCSSpp** command to determine the station extension. Use the **status station** command to determine the service state of the port. If the service state indicates that the port is in use, then the port is unavailable for certain tests. You must wait until the port is idle before retesting. 1. Retry the command at 1-minute intervals a maximum of 5 times.
1008	ABORT	Could not allocate a ringing circuit. Either all the ringing circuits are in use, or the ringing generator is defective or is not wired correctly. 1. Retry the command at 1-minute intervals a maximum of 5 times. 2. If the test continues to abort, look for RING-GEN errors in the Error Log. If an ABORT 1008 occurs for this test on other circuit packs as well, then the ringing generator may be defective or is not wired correctly. If it doesn't occur on port test 48 for ANL-16-L, then all four ring phases are in use.

Continued on next page

Table 3-390. TEST #220 Neon Test — *Continued*

Error Code	Test Result	Description/ Recommendation
1018	ABORT	There are not any translated ports on the circuit pack, or if there are ports, then none are administered to have "neon." 1. Verify that there are ports administered on the circuit pack. If no ports are administered, no further action is required. 2. Verify that you have neon sets connected (Lucent sets that may be neon sets are 500 and 2500 series, also some non-Lucent may also be neon sets). If no neon sets are connected to the circuit pack, the test continues to abort, but no further action is required. 3. If there are no neon sets connected to the circuit pack, at least one port needs to be translated with neon. To check if a port is translated with neon, use the **display port PCSSpp** command to determine the station extension of any station on this circuit pack. Use the **display station <extension>** to determine if the port is administered with neon. The field "Message Waiting Indicator:" must be set to "neon" for at least one of the administered ports. If this field is not administered to "neon" the test continues to abort. This is acceptable because not all stations have neon lamps on their analog terminals. If none of the terminals have neon lamps, the the test continues to abort, but no further action is required. 4. Retry the command again. 5. Retry the command at 1-minute intervals a maximum of 5 times. 6. If the test continues to abort, look for RING-GEN errors in the Error Log. If an ABORT 1008 occurs for this test on other circuit packs as well, then the ringing generator may be defective. If it does not occur on port test 48 for ANL-16-L, all four ring phases are in use. 7. Retry the command again.
2000	ABORT	Response to the request was not received within the allowable time period.
2100	ABORT	Could not allocate the necessary system resources to run this test.
	ABORT	Could not allocate the necessary system resources to run this test. Internal System Error. 1. If Error Type 1538 is present in the Error Log, follow the recommended maintenance strategy.
	FAIL	The test failed because no neon current was detected. 1. Look for the failure of test 220. If test 220 fails, replace the 650A power supply. 2. Retry the command again.

Continued on next page

Table 3-390. TEST #220 Neon Test — *Continued*

Error Code	Test Result	Description/ Recommendation
	PASS	This circuit pack is a TN746 or TN769 Analog Line circuit pack and the neon current is detected. This test also returns PASS for circuit packs that are not TN746 or TN769 circuit packs, but the test is not run on the circuit pack and the results of this test can be ignored.
any	NO BOARD	This is normal if the test is being done when (a) the circuit pack is not physically in the system or (b) the system is booting up. Otherwise, there is some inconsistency between the physical configuration and the data kept in the system. 1. Verify that the circuit pack is physically in the system. 2. Verify that the system is not in a stage of booting up. 3. Retry the command at 1-minute intervals for a maximum of 5 times.

Index

Numerics

120A ICSU, 1-74

A

ACA, see Automatic Circuit Assurance
administration
    logins, 1-25, 1-31
air filters, 1-17
alarm logs, 1-13
Alarm Origination to OSS Numbers, 2-27
alarms
    classifications, 1-14
    error reporting, 1-14
    logs, 1-13
    major, 1-14
    minor, 1-14
    off-board, 1-14
    on-board, 1-14
    warning, 1-14
Analog Tie Trunk Back-to-Back testing, 1-54
attendant consoles, LEDs, 1-84
AUDIX circuit pack (ADXDP-BD), 3-9
AUDIX digital port (ADXDP-PT), 3-10
Automatic Circuit Assurance (ACA), 1-46

B

background tests, 1-14
    fixed interval, 1-15
    scheduled, 1-15
bit rate
    setting, 1-98
Busy Verification of Terminals and Trunks, 1-46

C

cabinets
    configurations, 1-17
carrier lead appearances
    110 cross-connect field, 1-57
circuit packs
    processor, 1-83
    status LEDs, 1-86
    TN2224 Digital Line, 1-108
    TN464, 3-347
    TN722, 3-347

circuit packs, (cont)
TN767, 3-347
TN768, 3-770
TN780, 3-770
TN790 Processor, 1-8
universal DS1 (UDS1) interface, 3-347
clocks, system, 3-770
cold starts
with translations loading, 1-21
without translations loading, 1-21
Command Permissions Categories form, 1-32
commands
categories, 1-26
configurations
cabinets, 1-17
control and port circuit pack status LEDs, 1-85
control circuit packs
replacing, 1-39
reseating, 1-38
unseating, 1-38

D

data-link layer, OSI, 1-15
DC power
signaling leads, 1-95
demand tests, 1-15
diagnostic tests, 1-20
display alarms command, 1-37
DS1
CO trunk (CO-DS1), 3-324
interface circuit packs, 3-347
option jumpers, 3-869
signaling, 3-347
DS1 Circuit Pack form, 3-869
DS1 loopback, 1-70
DS1 span, 1-71
DS1 span test, 1-71
DS1 span, T1, 1-70

E

E&M mode tests, 1-54
electromagnetic compatibility standards, xviii
error
control, 1-15
error logs, 1-13
error reporting, 1-14
errors
logs, 1-13
reporting, 1-14
European Union Standards, xviii

F

Facility Test Calls, 1-47
    System Tone Test Call, 1-51
    Time Slot Test Call, 1-50
    Touch-Tone (DTMF) Receiver Test Call, 1-49
    Trunk Test Call, 1-48
First OSS Telephone Number, 2-27, 2-62
flow control, 1-15
Forced Password Aging, 1-25

H

help
    terminal set-up commands, 2-2

I

impedance, setting, 1-98
ISDN-PRI
    troubleshooting, 1-62
    troubleshooting test call problems, 1-66

L

LEDs
    alarms, 1-83
    attendant consoles, 1-84
    control and port circuit pack status, 1-85
    definition, 1-82
    indicators on maintenance/processor circuit packs, 1-83
    maintenance circuit pack, 1-83
    processor circuit pack, 1-83
LGATE-BD, 3-92
log in to system, 1-24
logging in, 1-24
Login Administration screen, 1-31
login IDs, 1-24
login procedure, 1-24
logins
    administering command permissions, 1-32
    administration, 1-31
    changing attributes, 1-31
    removing, 1-29
    security, 1-25
    testing, 1-29
logoff screen, 1-28
loopback jack, 1-70

M

maintenance
background testing, 1-14
preventative procedures, 1-17
subsystem, 1-1
system's overall functions, 1-1
testing, 1-14
maintenance object repair procedures
BRI-PORT (ISDN-BRI Port), ABRI-PORT (ASAI ISDN-BRI Port), 3-100
BRI-SET, ASAI-ADJ, BRI-DAT, 3-122
DID-BD (Direct Inward Dial Trunk Circuit Pack), 3-270
DID-DS1 (DS1 DID Trunk), 3-271
DID-TRK (DID Trunk), 3-282
DIG-BD (Digital Line Circuit Pack), 3-298
DIG-LINE (Digital Line), 3-299
DIOD-TRK (DIOD Trunk) [G1.2SE], 3-336
DTMR-PT [Dual Tone Multifrequency Port (TTR)], 3-420
RING-GEN (Analog Ring Generator), 3-668
S-SYN-BD (Speech Synthesis Circuit Pack), 3-672
S-SYN-PT (Speech Synthesis Port), 3-673
TIE-TRK (Tie Trunk), 3-797
TONE-BD (Tone-Clock Circuit Pack), 3-819
TONE-PT (Tone Generator), 3-826
TSC-ADM (Administered Temporary Signaling Connections) [G3iV1.1-286, G3iV2-386], 3-834
TTR-LEV (TTR Level), 3-840
UDS1-BD (UDS1 Interface Circuit Pack), 3-866
XXX-BD (Common Port Circuit Pack), 3-958
maintenance objects (MOs)
definition, 1-13
measurements
security, 1-25
memory cards
errors, 1-44
failures, 1-44
Modem Connection, 2-67

N

neon voltage (ring ping), 1-23
network interface, 1-74

O

Open System Interconnect model, 1-15
data-link layer, 1-15
physical layer, 1-15
option jumpers
TN464, 3-869
universal DS1 (UDS1) circuit packs, 3-869
OSI, see Open System Interconnect model
OSS Numbers field, 2-24

P

password, 1-25
Password Expiration screen, 1-27
passwords
    security, 1-25
physical
    layer, OSI, 1-15
power
    controls, 1-17
    options available, 1-17
    removing, 1-39
    restoring, 1-40
preventative maintenance
    procedures, 1-17
PRI endpoint problems
    troubleshooting, 1-64

R

reboots, 1-19
reset system 1, 1-21
reset system 2, 1-21
reset system 3, 1-21
reset system 4, 1-22
reset system 5, 1-23
ring ping, 1-23

S

safety precautions, xvi
Save Announcements screen, 1-44
Save Translation screen, 1-43
Second OSS Telephone Number, 2-27, 2-62
security
    logins, 1-25
    measurements, 1-25
    passwords, 1-25
setting
    bit rate, 1-98
    line impedance, 1-98
signaling leads, DC power, 1-95
simplex mode tests, 1-60
SPE-down mode, 1-36
switch settings
    TN464 circuit pack, 1-98
    TN760 tie trunk, 1-95
synchronization, 1-15
system features
    troubleshooting system resources, 1-45
system reboots, 1-22, 1-23
system resets
    reasons for, 1-20
System Tone Test Call, 1-51

T

T1 DS1 span, 1-70
TDM bus
    clocks, 3-770
TDM bus clock (TDM-CLK), 3-770
terminal
    type, 1-25
Terminating Trunk Transmission (TTT)
    tests, 1-62
testing
    background, 1-14
    demand, 1-15
    maintenance, 1-14
tests
    analog tie trunk back-to-back, 1-54
    E&M mode, 1-54
    logins, 1-29
    simplex mode, 1-60
    Terminating Trunk Transmission (TTT), 1-62
tests and audits
    #11 Digital Line Electronic Power Feed Test, 3-316
    #1201 Digital Terminal Remote Loop Around Test, 3-310
    #1209 Board Loopback Test, 3-390
    #1209 DS1 Board Loopback Test, 3-390
    #1210 CSU Equipment Loopback Test, 3-393, 3-394
    #1211 CSU Repeater Loopback Test, 3-396, 3-397
    #1212 CPE Loopback Jack Test, 3-401
    #1213 Far CSU Loopback Test, 3-405
    #1214 One-Way Span Test, 3-408
    #1215 Inject Single Bit Error Test, 3-412
    #1216 End Loopback/Span Test, 3-414
    #122 Cabinet Temperature Query Test [Non-Variable Speed Fans], 3-154
    #1227 ICSU Status LEDs Test, 3-417
    #13 Voice and Control Channel Local Loop Test, 3-318
    #135 Internal Loop Around Test, 3-362, 3-884
    #138 Loss of Signal Alarm Inquiry Test, 3-364, 3-365, 3-888
    #139 Blue Alarm Inquiry Test, 3-371
    #139 Red Alarm Inquiry Test, 3-374
    #140 Red Alarm Inquiry Test, 3-373
    #140AY Loop Around Test, 3-70
    #141 Yellow Alarm Inquiry Test, 3-376, 3-377
    #142 Major Alarm Inquiry Test, 3-379, 3-907
    #143 Minor Alarm Inquiry Test, 3-382, 3-910
    #144 Slip Alarm Inquiry Test, 3-384, 3-741
    #145 Misframe Alarm Inquiry Test, 3-386
    #146 Translation Update Test, 3-389
    #148 TDM Bus Clock Circuit Status Inquiry Test, 3-775, 3-776
    #150 TDM Bus Clock PPM Inquiry Test, 3-777
    #151 TDM Bus Clock Parameter Update Test, 3-779
    #16 DIG-LINE Station Lamp Updates Test, 3-320
    #161 Loop Around Test, 3-107, 3-731
    #17 Station (Digital) Audits Test, 3-322
    #205 Channel Administration Memory Array (CAMA) Test, 3-80
    #206 Playback Speech Memory Array (PSMA) Test, 3-82
    #208 Angel-Speech Processor (SP) Handshake Test, 3-66
    #209 Announcement Checksum Test, 3-67

tests and audits, (cont)
#211 Super Frame Match Inquiry Test, 3-73
#212 Clock Match Inquiry Test, 3-74
#222 140AY Channel Sanity Inquiry Test, 3-85
#270 Clear Error Counters, 3-121, 3-730
#314 DS1 CO Dial Tone Seizure Test, 3-333
#314 DS1CO Dial Tone Seizure Test, 3-196
#35 Battery Feed Test, 3-43
#36 Port Audit and Update Test, 3-194, 3-332
#36 Station Status and Translation Audits and Updates Test, 3-46
#40 Tone Generator Transmission Test, 3-829
#42 Tone Detection Verification Test, 3-180
#46 Clock Health Inquiry Test, 3-824
#47 Loop Around and Conference Test, 3-49
#48 Station Present Test, 3-54
#50 NPE Connection Audit Test, 3-358, 3-881
#52 Control Channel Loop Around Test, 3-359
#53 SAKI Sanity Test, 3-360, 3-882
#595 LANBIC Receive Parity Error Counter Test, 3-97, 3-722
#6 NPE Crosstalk Test, 3-187, 3-328
#618 BRI Port Local LAN Loop Around, 3-109, 3-733
#619 BRI Port Local TDM Loop Around, 3-111, 3-734
#620 Electronic Power Feed Restoral, 3-114
#621 Level 1 Status Inquiry, 3-115, 3-738
#622 Electronic Power Feed Inquiry, 3-118
#624 Layer 1 Transmission Error Counter Test, 3-119
#625 Receive FIFO Overflow Error Counter Test, 3-120, 3-736
#626 Signaling Link Status Test, 3-136
#627 BRI Remote Loop Back, 3-139
#628 BRI XID, 3-142
#629 BRI Layer 3 Query, 3-144, 3-740
#630 BRI Set Audits, 3-147
#7 Conference Circuit Test, 3-191, 3-331
#844-848 Transmission Test, 3-221, 3-815
#884 Memory Checksum Test, 3-483, 3-615
#887 Read and Clear Board Counters, 3-616
#9 Digital Line NPE Crosstalk Test, 3-313
#985 System Link Status, 3-706
tie trunk
circuit pack option settings, 1-95
Time Slot Test Call, 1-50
TN2182 circuit packs
time division multiplex (TDM) bus clocks, 3-770
TN2224 Digital Line, 1-108
TN464 circuit pack
option settings, 1-98
TN464 circuit packs
DS1 interface, 3-347
option jumpers, 3-869
TN722 circuit packs, 3-347
TN760 circuit pack
option settings, 1-95
TN767 circuit packs, 3-347
TN768 circuit packs
time division multiplex (TDM) bus clocks, 3-770
TN780 circuit packs
time division multiplex (TDM) bus clocks, 3-770
TN790 Processor, 1-8

tone-clock circuit packs
    time division multiplex (TDM) bus clocks, 3-770
Touch-Tone (DTMF) Receiver Test Call, 1-49
transmission
    errors, 1-15
    stream, 1-15
troubleshooting
    ISDN-PRI problems, 1-62
    ISDN-PRI test call problems, 1-66
    PRI endpoint problems, 1-64
Trunk Group Busy/Warning Indicators to Attendant, 1-47
Trunk Group form, 1-56
Trunk Identification by Attendant, 1-47
Trunk Test Call, 1-48
TTT, see Terminating Trunk Transmission (TTT)

U

universal DS1 (UDS1) circuit packs
    option jumpers, 3-869
universal DS1 (UDS1) interface circuit packs, 3-347

W

warm starts, 1-21