Lucent Technologies
Bell Labs Innovations

DEFINITY® PC Console Release 2.5

User's Manual

555-233-739
Issue 2.5 October 1999

Copyright © 1999, Lucent Technologies
All Rights Reserved
Printed in USA

Notice. While reasonable efforts were made to ensure that the information in this book was complete and accurate at the time of printing, Lucent Technologies can assume no responsibility for any errors. Changes and corrections to the information contained in this document may be incorporated into future reissues.

Your Responsibility for Your System's Security. Toll fraud is the unauthorized use of your telecommunications system by an unauthorized party, for example, persons other than your company's employees, agents, subcontractors, or persons working on your company's behalf. Note that there may be a risk of toll fraud associated with your telecommunications system and, if toll fraud occurs, it can result in substantial additional charges for your telecommunications services. You and your system manager are responsible for the security of your system, such as programming and configuring your equipment to prevent unauthorized use. The system manager is also responsible for reading all installation, instruction, and system administration documents provided with this product in order to fully understand the features that can introduce risk of toll fraud and the steps that can be taken to reduce that risk. Lucent Technologies does not warrant that this product is immune from or will prevent unauthorized use of common-carrier telecommunication services or facilities accessed through or connected to it. Lucent Technologies will not be responsible for any charges that result from such unauthorized use.

Lucent Technologies Fraud Intervention. If you suspect that you are being victimized by toll fraud and you need technical support or assistance and are within the United States, call the Technical Service Center Toll Fraud Intervention Hotline at 1 800 643-2353. If you need technical support or assistance and are outside of the United States, contact the International Technical Assistance Center (ITAC) at US code 303 804-3777.

Warranty. Lucent Technologies provides a limited warranty on this product. Refer to the "Limited Use Software License Agreement" card provided with your package.

Trademarks. DEFINITY, PassageWay , and CallMaster are registered trademarks of Lucent Technologies. Prologix is a trademark of Lucent Technologies. Microsoft, MS-DOS, and Microsoft Access are registered trademarks of Microsoft Corporation. Windows and Windows NT are trademarks of Microsoft Corporation. Pentium is a registered trademark of Intel Corporation. PhoneLine is a registered trademark of CCOM Information Systems. MDAccess and MasterDirectory are trademarks of CCOM Information Systems. MDAccess™ is copyrighted by CCOM Information Systems. All rights reserved.

Federal Communication Commission (FCC) Statement: Part 15: Class A Statement. This equipment has been tested and found to comply with the limits for a Class A digital device, pursuant to Part 15 of the FCC Rules. These limits are designed to provide reasonable protection against harmful interference when the equipment is operated in a commercial environment. This equipment generates, uses, and can radiate radio frequency energy and, if not installed and used in accordance with the instruction manual, may cause harmful interference to radio communications. Operation of this equipment in a residential area is likely to cause harmful interference, in which case the user will be required to correct the interference at his own expense.

Acknowledgment. This document was prepared by the Product Documentation Development group, Lucent Technologies, Holmdel, NJ 07733-3030.

1 Installation **1-1**

Before You Begin **1-1**

- Contents of the Package 1-1
- Hardware and Software Requirements for the Personal Computer 1-1
- Additional Hardware Required 1-2

Installation **1-4**

- Administering PC Console, at the Switch, as an Attendant Console 1-4
- Assessing Your Hardware Components 1-6
- Connecting the PC to the Telephone 1-8
- Connecting the PC/Telephone Configuration to the Power Source 1-14
- Installing the PC Console Software 1-18
- Administering the PC Console Software 1-20
- Administering the PhoneLine MasterDirectory Software 1-23
- Confirming the Operation of Your Telephone 1-24

2 Understanding PC Console **2-1**

Welcome **2-1**

An Overview of PC Console **2-1**

- Sharing Information within PC Console 2-2
- Personalizing Screens in PC Console 2-2
- Navigating through the PC Console Screens 2-2
- Help Information 2-3
- Busy Lamp Field 2-3
- Feature Buttons 2-3

Display Buttons **2-4**

- PC Directories 2-4
- Call Handling Area 2-5

3 Console Administration **3-1**

Overview **3-1**

Accessing the Console Administration Area **3-2**

Assigning Attendant Profiles and Passwords **3-2**

Identifying Button Functions **3-4**

Defining System Parameters **3-11**

Creating Custom Languages **3-16**

Exiting the Console Administration Area **3-22**

4 Directory Administration **4-1**

Overview **4-1**

Using the PhoneLine MasterDirectory Software **4-1**

Helpful Hints When Building Your Directories **4-2**

Importing an Upload File – A Quick Overview **4-4**

5 Console Operations **5-1**

Operations Overview **5-1**

Accessing and Exiting PC Console Operations **5-2**

Call Handling **5-3**

- Answering a Call 5-3
- Conferencing Multiple Parties Together on a Call 5-5
- Holding a Call 5-7
- Placing a Call 5-8
- Releasing a Call 5-12
- Splitting a Call 5-12
- Transferring (Extending) a Call 5-13
- Typing Notes About a Call 5-19

Searching and Updating a Directory **5-20**

- Accessing the PC Console Directory Functions 5-20
- Searching for Information in a PC Console Directory 5-21
- Placing a Call from a PC Console Directory 5-21
- Changing the Information in a PC Console Directory 5-22
- Exiting the PC Console Directory Functions 5-23

6 Switch Features **6-1**

Abbreviated Dialing **6-1**

Attendant Call Waiting **6-2**

Attendant Conference **6-3**

Attendant Control of Trunk Group Access **6-3**

Attendant Direct Trunk Group Selection **6-4**

Attendant Intrusion (Call Offer) (Generic 3r) **6-5**

- Interactions 6-5

Attendant Lockout **6-6**

Attendant Override of Diversion Features (Generic 3r) **6-6**

Attendant Priority Queue (Generic 3r) **6-7**

Attendant Recall **6-8**

Attendant Serial Call (Generic 3r) **6-9**

Auto Hold (Generic 3r) **6-10**

Auto Start and Don't Split (Generic 3r) **6-10**

- Interactions 6-12

Automatic Alternate Routing and Automatic Route Selection **6-12**

Automatic Answer **6-12**

Automatic Circuit Assurance **6-12**

Busy Verification of Telephones and Trunks **6-13**

Call Coverage **6-13**

- Consult 6-15
- Coverage Callback 6-16

Call Detail Recording (CDR) Account Code Dialing **6-16**

Call Forwarding All Calls **6-17**

Call Park **6-19**

Code Calling Access **6-20**

Controlled Restrictions **6-22**

Emergency Access to the Attendant **6-24**

Facility Busy Indication **6-25**

Facility Test Call **6-26**

Individual Attendant Access **6-26**
Integrated Directory **6-27**
Inter-PBX Attendant Service (IAS) **6-28**
- Interactions 6-28

ISDN-PRI **6-30**
- Basic ISDN-PRI Call 6-31
- Redirected ISDN-PRI Call 6-32

Leave Word Calling **6-32**
Loudspeaker Paging Access **6-34**
Loudspeaker Paging Access-Deluxe **6-35**
Message Retrieval **6-39**
Multiple Listed Directory Numbers **6-40**
Network Access-Private **6-41**
Network Access-Public **6-41**
Night Service **6-41**
- Night Service Disconnect Timer 6-42

Serial Call (Generic 3r) **6-42**
Straightforward Outward Completion **6-43**
Through Dialing **6-43**
Time-of-Day Routing **6-43**
- Clocked Manual Override Option 6-43
- Immediate Manual Override Option 6-45

Timing **6-46**
- Alerting Timer (Generic 3) 6-46
- No Answer Timer (Generic 3) 6-47
- Return Call Timeout 6-47
- Timed Reminder 6-48

Trunk Group Busy/Warning Indicators to Attendant **6-49**
Trunk Identification **6-49**
Trunk-to-Trunk Transfer **6-49**

7 Operating in a Distributed Communications System Environment **7-1**

Attendant Call Waiting **7-1**

Attendant Control of Trunk Group Access **7-1**

Attendant Display **7-2**

Automatic Circuit Assurance **7-2**

Busy Verification of Telephones and Trunks **7-2**

Call Forwarding All Calls **7-3**

Direct Trunk Group Selection **7-3**

Trunk Group Busy/Warning Indicators **7-3**

8 Operating in a Centralized Attendant Service Environment **8-1**

An Overview of the CAS Environment **8-1**

- Tones Associated with CAS Calls 8-2
- Call Bar Display Information 8-3

Operating Procedures **8-4**

CAS Backup Service **8-8**

CAS Night Service Operations **8-9**

9 Troubleshooting **9-1**

Backup Procedures and Considerations **9-1**

Troubleshooting PC Console Installation and Usage Problems **9-2**

- Troubleshooting Problems with the Telephone or PassageWay Adapter 9-3
- Troubleshooting Error Messages 9-5
- Troubleshooting General Usage Problems 9-14

Troubleshooting Switch Problems **9-20**

- Console Alarm Indicators 9-20
- Alarm and Alarm Reported Indicators 9-20
- Optional Alarm Lamps 9-20
- The Features You Can Use to Troubleshoot Problems at the Switch 9-21
  - Automatic Circuit Assurance (ACA) 9-22
  - Busy Verification of Telephones and Trunks 9-22
  - DCS Busy Verification of Telephones and Remote Trunks 9-26
  - Trunk Group Busy/Warning Indicators to Attendant 9-31
  - Trunk Identification 9-31

Recovering from a Power Failure **9-32**

Recovering from a PC Failure **9-33**

The Contents of This Document

This user's manual contains all of the procedures and reference material you may need to install, administer, operate, maintain, and troubleshoot PC Console Release 2 in your unique environment.

- Chapter 1, "Installation," describes the components included with PC Console, outlines hardware/software requirements and configuration options, and provides step-by-step procedures to successfully install PC Console.
- Chapter 2, "Understanding PC Console," provides an overview of PC Console functions, and describes its individual features.
- Chapter 3, "Console Administration," provides an overview and step-by-step instructions to administer PC Console. This includes identifying approved users, defining their logins, passwords, and preferences (including the interface language), and labeling the buttons that are displayed on the PC Console screen.
- Chapter 4, "Directory Administration," describes how PC Console uses the database information you create via the PhoneLine® MasterDirectory™ software.
- Chapter 5, "Console Operations," contains an overview of PC Console operations, and the procedures most frequently used by the operator. Here you will find the instructions to answer, place, hold, split, transfer, conference, and release calls. Also refer here for instructions to search for any person listed in a PC Console directory.
- Chapter 6, "Switch Features," describes the switch features most commonly used by the PC Console operator. These features are presented alphabetically.
- Chapter 7, "Operating in a Distributed Communications System Environment," describes the Distributed Communications System (DCS) features that can operate transparently in your environment. A DCS configuration consists of 2 to 20 private switches that are interconnected. These switches may be in different geographical locations. To certain system features, however, the DCS configuration appears as a single switch. These features, and their usage, are listed alphabetically in this chapter.
- Chapter 8, "Operating in a Centralized Attendant Service Environment," describes Centralized Attendant Service (CAS) features, and provides instructions for handling CAS calls. CAS is a feature of the switch that allows a single attendant to handle calls for multiple switches and locations simultaneously.

- Chapter 9, “Troubleshooting,” contains procedures and techniques for troubleshooting hardware- and software-related problems. This chapter also provides emergency recovery information, and outlines the preventative steps you can take to ensure the integrity of your system.
- The Quick Reference Card contains summaries of the commands and procedures you will use most frequently in the PC Console environment.

A glossary is provided at the rear of this guide.

How to Comment on This Document

To comment on this document, please return the comment card.

Conventions Used in This Manual

The following conventions are used in this manual:

- The mouse or the keyboard can be used to accomplish most tasks in PC Console. Whenever possible, procedures apply to both the mouse and the keyboard.
- Information in bold type characters, such as **F8**, represents a keyboard option, button, or indicator on the PC Console screen.
- A keyboard equivalent is an alternative method of making a selection. Pressing **ALT** and the underlined character of a selection allows you to make that selection. For example, pressing **ALT-T** from the PC Console Operations screen allows you to select the **Attendant** drop down menu.

Security Issues

As a Lucent Technologies customer, you should be aware that there is an increasing problem of telephone fraud. Telephone toll fraud can occur in many forms, despite the numerous efforts of telephone companies and telephone equipment manufacturers to control it. Some individuals use electronic devices to prevent or falsify records of these calls. Others charge calls to someone else’s number by illegally using lost or stolen calling cards, billing innocent parties, clipping onto someone else’s line, or breaking into someone else’s telephone equipment physically or electronically.

Today security problems are not just limited to toll fraud. There have been sharp increases in reported incidents of hackers: criminals skilled in reprogramming computer systems, accessing telecommunications systems through remote administration or maintenance ports. These ports cannot be used to place phone calls, but hackers can gain control over the setup of the system. Through these ports, hackers create security “holes” to allow unauthorized calling — a serious form of electronic vandalism.

Maintenance ports are their most recent target of abuse. In this scenario, hackers find a private branch exchange (PBX) maintenance port number with their “war dialer;” a device that randomly dials telephone numbers until a modem or dial tone is obtained. They then “hack” the user ID and password, sometimes just by using the PBX default passwords, to enter your system.

This is the most dangerous type of abuse because, once in your system, the hackers have control over all the administrative commands. While in your system, they have been known to:

- Turn on Remote Access or Direct Inward System Access (DISA). Hackers have been known to change the system at 8:00 p.m. to allow fraudulent calls. Then, at 3:00 a.m., they reprogram the system back to its original configuration. One company was hit three weekends in a row before it realized what was happening.
- Turn off Call Detail Recording (CDR) or Station Message Detail Recording (SMDR), hack your system all weekend, then turn it back on before Monday morning. This is especially disturbing to managers who are security conscious and check the CDR/SMDR reports every morning looking for suspicious activity. They will not see records of the calls because CDR/SMDR was turned off by the hackers. The administrator may notice the absence of CDR/SMDR records for evening, night, and weekend calls made by employees.

PBX Security Measures

Everyone in your company who uses the telephone system is responsible for system security. Users and attendants need to be aware of how to recognize and react to potential hacker activity. Informed people are more likely to cooperate with security measures that often make the system less flexible and more difficult to use.

Implement the following general security measures to protect your PBX and discourage the unauthorized use of your communications system.

- Never program passwords or authorization codes onto auto-dial buttons. Display phones reveal the programmed numbers, and internal abusers can use the auto-dial buttons to originate unauthorized calls.
- Discourage the practice of writing down passwords. If a password needs to be written down, keep it in a secure place and never discard it while it is active.
- Attendants should tell their system manager if they answer a series of calls where there is silence on the other end or the caller hangs up.
- Users who are assigned voice mailboxes should frequently change personal passwords and should not choose obvious passwords.

- Advise users with special telephone privileges (such as Remote Access, voice mail outcalling, and call forwarding off-switch) of the potential risks and responsibilities.
- Be suspicious of any caller who claims to be with the telephone company and wants to check an outside line. Ask for a callback number, hang up, and confirm the caller's identity.
- Never distribute the office telephone directory to anyone outside the company; be careful when discarding it.
- Never accept collect phone calls.
- Never discuss your telephone system's numbering plan with anyone outside the company.
- Change passwords frequently (at least quarterly). Set password expiration times and tell users when the changes go into effect. Changing passwords routinely on a specific date (such as the first of the month) helps users to remember to do so.
- Establish well-controlled procedures for resetting passwords.
- Limit the number of invalid attempts to access voice mail to five or less.
- Monitor access to the dial-up maintenance port. Change the access password regularly and issue it only to authorized personnel. Consider using the Remote Port Security Device (RPSD) — a Lucent Technologies product that helps protect your administration and maintenance ports from unauthorized access.
- Create a PBX system management policy concerning employee turnover and include these actions:
  - Delete all unused voice mailboxes in the voice mail system.
  - If an employee is terminated, immediately delete any voice mailboxes belonging to that employee.
  - If a terminated employee had Remote Access calling privileges and a personal authorization code, remove the authorization code immediately.
  - If barrier codes and/or authorization codes were shared by the terminated employee, these should be changed immediately. Notify the remaining users as well.
  - If the terminated employee had access to the system administration interface, their login ID should be removed (G3V3 or later). Any associated passwords should be changed immediately.
- Back up system files regularly to ensure a timely recovery should it be required. Schedule regular, off-site backups.
- Keep the attendant console(s) and supporting documentation in an office that is secured with a changeable combination lock. Provide the combination only to those individuals having a real need to enter the office.

- Keep telephone wiring closets and equipment rooms locked.
- Keep telephone logs and printed reports in locations that only authorized personnel can enter.
- Design distributed reports so they do not reveal password or trunk access code information.

For additional information about securing against toll fraud, refer to the following document:

Document #	Document Title
555-025-600	BCS Products Security Handbook

Lucent Technologies Fraud Intervention

If you suspect you are being victimized by toll fraud and you need technical support or assistance, call Technical Service Center Toll Fraud Intervention Hotline at 1 800 643-2353.

Related Documentation

The document you are reading now assumes that you are already familiar with your computer, with MS-DOS®, and with Microsoft® Windows®. If this is not the case, refer to the following documentation to learn this necessary information, then continue with your PC Console training:

- User's guide for your personal computer. You may need this reference for explanations of commands used by your PC when you install, configure, and use your PC Console software package.
- User's guide for Microsoft MS-DOS. You may need this reference for explanations of the DOS commands used by your PC during the operation of your PC Console software package.
- User's guide for Microsoft Windows. You may need this reference for explanations of the commands and configuration options that are used or affected by the PC Console software package.

Product Support

PC Console was designed for compatibility with all current versions of DEFINITY® Communications System G1 and G3, and DEFINITY Prologix™ Solutions.

If you have a question about PC Console, first read this manual or refer to the on-line help. If you cannot find the answer, contact the Technical Service Center (TSC) at 1 800 242-2121.

If you are an international customer, call your distributor, your Regional Center of Excellence, or contact the International Technical Assistance Center (ITAC) at US code 303 804-3777.

Installation

1

Before You Begin

Before you begin to install PC Console, verify that your PC Console installation package is complete, and that your PC meets both the hardware and software requirements identified in this section.

Contents of the Package

Your PC Console package should contain the following:

- **PC Console software**
  One CD-ROM that contains the PC Console installation and application software, on-line help and PC Console documentation.
- **Registration card for notification of updates**
  If you want to be notified of updates to the PC Console system, return this registration card (by mail or fax) to the BCS Publications Center. The appropriate address is provided on the card.
- **Comment card**
  Lucent Technologies welcomes your feedback on the PC Console documentation. Please return the comment card (by mail or fax) to the address provided on the card.

Hardware and Software Requirements for the Personal Computer

This chapter provides instructions for installing the PC Console software on a personal computer. That computer must meet, or exceed, the following basic requirements:

- IBM-compatible

- 15” Super VGA (SVGA) monitor
- Pentium®-based processor
- 100 Megahertz clocking speed
- 16 MB of RAM available to PC Console
- CD-ROM drive
- Microsoft Windows NT™, Microsoft Windows 95, or Microsoft Windows 3.1 or later
- A COM Port dedicated to PC Console. (No other application may vie for this port.)
- Sufficient hard disk space. You will need 4 MB of hard disk space for the PC Console software, *plus* additional space for your PC Console directory information. The space for your PC Console directory information depends upon the number of users you are supporting and the amount of information stored for each person. Refer to the following chart to roughly assess the additional space required.

Number of Users → **Number of Characters per User’s Record ↓**	**200**	**500**	**1,000**	**5,000**	**10,000**	**20,000**
200	4 MB	4.1 MB	4.2 MB	4.5 MB	5 MB	6 MB
500	4.1 MB	4.3 MB	4.5 MB	6.5 MB	9 MB	14 MB
1,000	4.2 MB	4.5 MB	5 MB	9 MB	14 MB	24 MB
5,000	4.5 MB	6.5 MB	9 MB	29 MB	54 MB	104 MB
10,000	5 MB	9 MB	14 MB	54 MB	104 MB	204 MB
20,000	6 MB	14 MB	54 MB	104 MB	204 MB	404 MB

Additional Hardware Required

In addition to a personal computer that meets or exceeds the requirements listed above, you will need the following hardware components to install and use your PC Console.

- Telephone; a 2- or 4-wire DCP telephone

  a CallMaster® VI telephone, and associated 2-wire DCP cord

  or

  an 8411 telephone, and associated D8W telephone cord

  or

a 64xx-, 74xx-, 84xx-, or 94xx-series DCP telephone, and associated D8W telephone cord; plus the DEFINITY PassageWay® DirectConnect Adapter, with D8W telephone cord.

NOTE:
You may want to augment your telephone configuration with a headset and necessary adapter to facilitate ease-of-use.

- PC Connector cord:

  Verify that the EIA-232-D Connector cord provided with PC Console is appropriate for connecting your PC to either the PassageWay Adapter (if one is used) or to the telephone.

  One end of the cord connects to the COM port on your PC. The COM port typically has either a 9-pin male, or a 25-pin male interface.

  The other end of the cord connects either to the PassageWay Adapter (which has a 9-pin female interface), or to the telephone (which has a 25-pin female interface).

  The EIA-232-D Connector cord must connect to each of the two devices in your environment. If necessary, you can purchase adapters to change one or both ends of the cord to a different number of pins, or to a different gender.

- Power supply:

  For US installations, the DEFINITY Power Kit, containing: KS-22911 power supply, 400B2 adapter, and D6AP cord.

  For US or International installations, the MSP-1 Power Supply Kit, containing: MSP-1 power supply, and power cord.

NOTE:
The CallMaster VI is powered by the switch, and does not require a separate power supply.

Installation

Installing PC Console is a multi-step process. You must perform each of the following, in the order indicated:

- Administer PC Console, at the switch, as an Attendant Console.
- Assess your hardware components.
- Connect the PC to the telephone.
- Connect the PC/telephone configuration to the power source.

  NOTE:

  This step is not necessary if you are using a CallMaster VI telephone. The CallMaster VI is powered by the switch, and does not require a separate power supply.

- Install the PC Console software.
- Administer the PC Console software.
- If appropriate, administer the PhoneLine MasterDirectory software.
- Confirm that your telephone is operating as an Attendant Console.

Each of these steps is outlined, in order, in this chapter. To begin, proceed to the next section, “Administering PC Console, at the Switch, as an Attendant Console.”

Administering PC Console, at the Switch, as an Attendant Console

The first step in the installation process is administering the console, at the switch. It is essential that the switch recognize PC Console as a 302 Attendant Console

To administer PC Console, at the Switch, as a 302 Attendant Console:

1. Enter the following command:

   display console_parameters

2. Verify that the switch console parameters are correct. These should include (but are not limited to) Class of Service, Class of Restriction, timing, and queue priorities.
3. If PC Console is replacing an existing 302 Attendant Console, print a copy of the associated attendant form using the following command:

   display attendant # print

4. If PC Console is *not* replacing an existing 302 Attendant Console, use the following command to enter the data for PC Console as a 302 Attendant Console:

   add attendant #

5. Select the appropriate options on the attendant form. Among these options is the type of console being defined. We recommend that you specify a 302B to achieve the greatest compatibility with PC Console.

6. Make a note of the feature button assignments, particularly those that have been moved from their default positions (indicated in the "Default Button Number" column, below).

Default Button Number	Button Assignment
1	Split
6	Hold
19	Forced Release
23	Night Service
24	Position Busy

7. Make a note of the display button assignments, particularly those that have been moved from their default positions (indicated in the "Default Button Number" column, below). While these display buttons are not required, they are strongly recommended if you wish to achieve the greatest functionality in PC Console.

Default Button Number	Button Assignment
1	Normal
4	Next
6	Call-Disp

8. Assign an extension to this station, if desired.

9. Print the attendant form using the following command. (You will need the information it contains when administering PC Console.)

   display attendant # print

Assessing Your Hardware Components

PC Console can be configured to use either a 64xx-, 74xx-, 84xx- or 94xx-series DCP telephone with PassageWay Adapter, or an 8411 or CallMaster VI telephone. You will note that the 8411 and the CallMaster VI telephones do not require the PassageWay Adapter. The functionality of these telephones eliminates the need for this additional component.

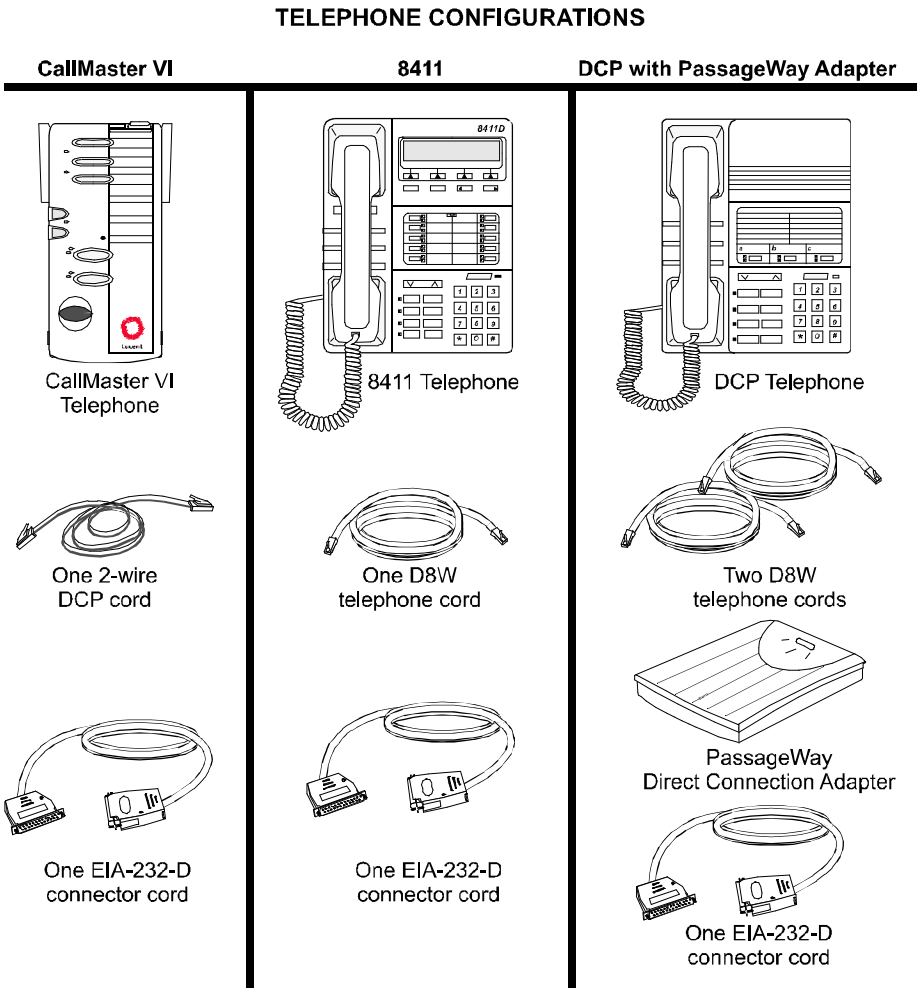

Figure 1-1. The Available Telephone Components

In addition, the PC Console telephone can be powered by one of two components. The KS-22911 power supply can be used in the United States, and the MSP-1 can be used in most international installations.

NOTE:

The CallMaster VI is powered by the switch and does not require a separate power supply.

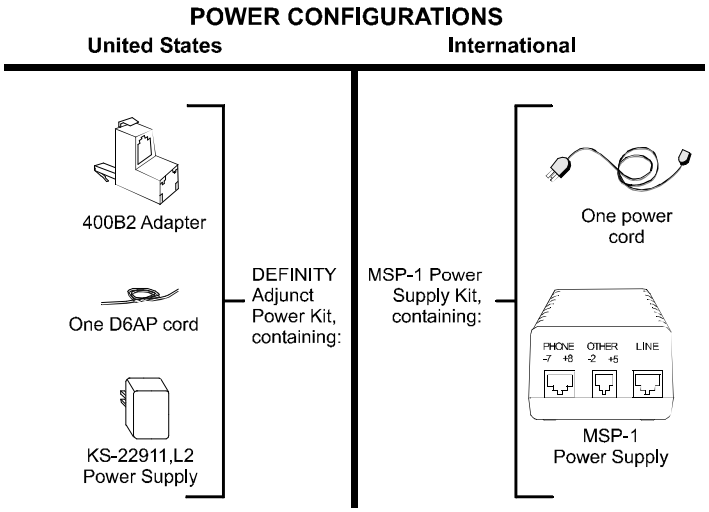

Figure 1-2. The Available Power Components

Connecting the PC to the Telephone

If you are using a CallMaster VI telephone (see Figure 1-3):

1. Plug the EIA-232-D Connector cord (including adapter, if necessary) into the communications (COM) port on the PC. If more than one port is available, write down the number of the port to which you physically attach the cord. Tighten all retaining screws.

   NOTE:
   Attach an adapter only if the EIA-232-D Connector cord does not conform to the COM port on the PC. You can purchase adapters to change the number of pins and/or the gender of the connector.

2. Plug the remaining end of the EIA-232-D Connector cord (including adapter, if necessary) into the 9-pin interface at the top of the telephone. Tighten all retaining screws.

   NOTE:
   Attach an adapter only if the EIA-232-D Connector cord does not conform to the 9-pin female interface on the telephone. You can purchase adapters to change the number of pins and/or the gender of the connector.

3. Connect one end of the 2-wire DCP cord to the jack at the top of the telephone.
4. Plug the remaining end of the 2-wire DCP cord into the wall jack.

   Skip the procedure to connect the PC/telephone configuration to a separate power supply. The CallMaster VI is powered by the switch and does not require an independent power supply.

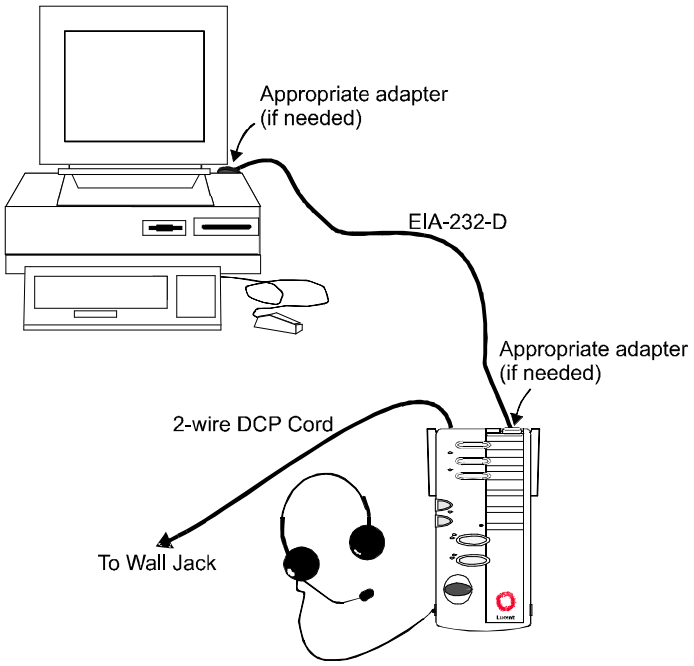

Figure 1-3. Connecting the PC to the CallMaster VI Telephone

If you are using an 8411 telephone (see Figure 1-4):

1. Plug the EIA-232-D Connector cord (including adapter, if necessary) into the communications (COM) port on the PC. If more than one port is available, write down the number of the port to which you physically attach the cord. Tighten all retaining screws.

   NOTE:
   Attach an adapter only if the EIA-232-D Connector cord does not conform to the COM port on the PC. You can purchase adapters to change the number of pins and/or the gender of the connector.

2. Plug the remaining end of the EIA-232-D Connector cord (including adapter, if necessary) into the 25-pin interface on the bottom of the telephone. Tighten all retaining screws.

   NOTE:
   Attach an adapter only if the EIA-232-D Connector cord does not conform to the 25-pin female interface on the telephone. You can purchase adapters to change the number of pins and/or the gender of the connector.

3. Connect one end of a D8W cord to the jack on the bottom of the 8411 telephone. You will use the remaining end of this cord to connect to the power source.

   You will use the remaining end of this D8W cord, within the next procedure, to connect to the power source. Turn to the section entitled “Connecting the PC/Telephone Configuration to the Power Source.”

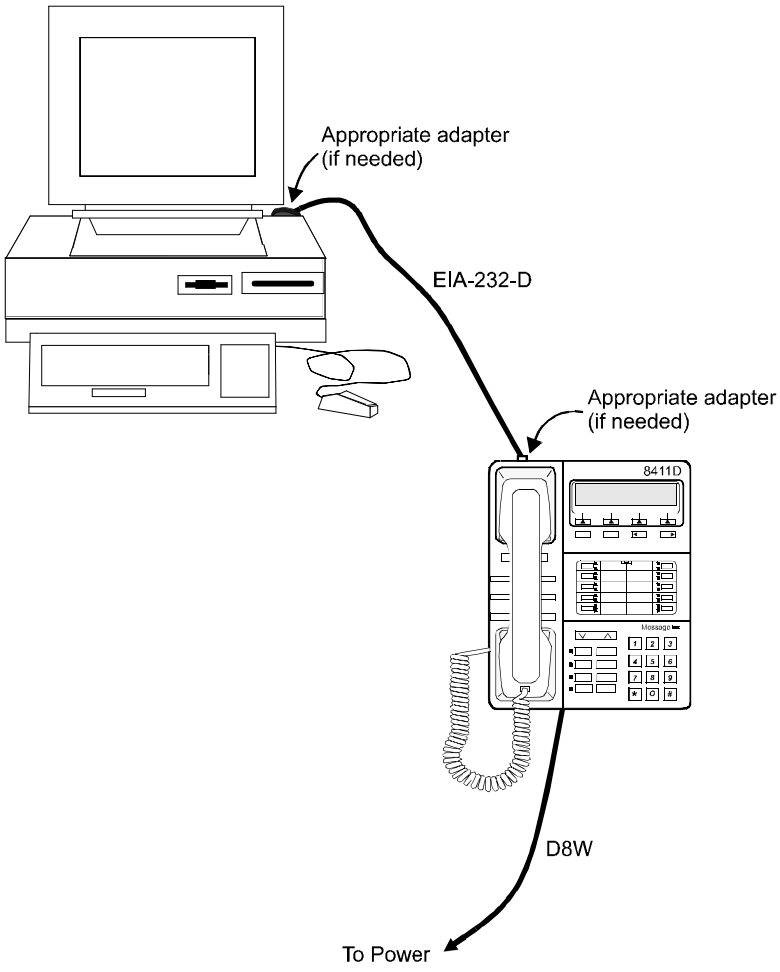

Figure 1-4. Connecting the PC to the 8411 Telephone

If you are using a DCP telephone and PassageWay Adapter (see Figure 1-5):

1. Plug the EIA-232-D Connector cord (including adapter, if necessary) into the communications (COM) port on the PC. If more than one port is available, write down the number of the port to which you physically attach the cord. Tighten all retaining screws.

   NOTE:
   Attach an adapter only if the EIA-232-D Connector cord does not conform to the COM port on the PC. You can purchase adapters to change the number of pins and/or the gender of the connector.

2. Plug the remaining end of the EIA-232-D Connector cord (including adapter, if necessary) into the 9-pin interface on the PassageWay Adapter. Tighten all retaining screws.

   NOTE:
   Attach an adapter only if the EIA-232-D Connector cord does not conform to the 9-pin female interface on the PassageWay Adapter. You can purchase adapters to change the number of pins and/or the gender of the connector.

3. Connect one end of a D8W cord to the “Phone” jack on the PassageWay Adapter. Connect the other end to the jack on the DCP telephone.
4. Connect one end of another D8W cord to the “Line” jack on the PassageWay Adapter. You will use the remaining end of this cord to connect to the power source. Turn to the section entitled “Connecting the PC/Telephone Configuration to the Power Source.”

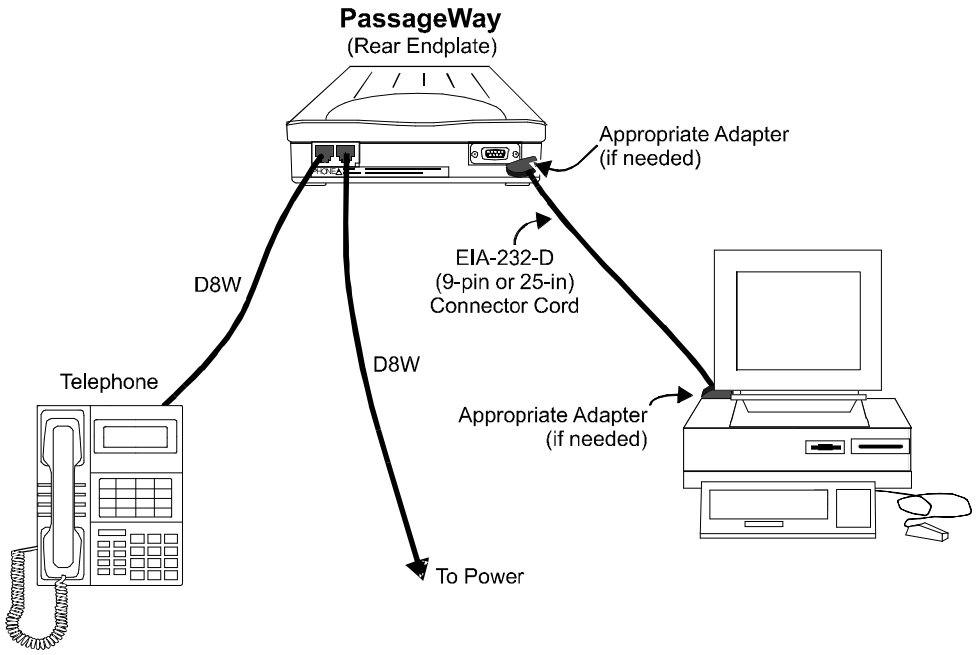

Figure 1-5. Connecting the PC to the DCP Telephone and PassageWay Adapter

Connecting the PC/Telephone Configuration to the Power Source

If you are using an 8411, 64xx-, 74xx-, 84xx-, or 94xx-series telephone, you must connect the PC/Telephone configuration to a separate power source.

NOTE:

This step is not necessary if you are using a CallMaster VI telephone. The CallMaster VI is powered by the switch, and does not require a separate power supply.

If you are using a KS-22911,L2 power source (see Figure 1-6):

1. Plug the 4002B2 Adapter into the PBX wall jack.
2. Plug the remaining end of the D8W cord (from the PC/Telephone configuration you assembled earlier) into the bottom connector on the 400B2 adapter.
3. Plug one end of the D6AP cord into the power supply unit.
4. Plug the other end of the D6AP cord into the top connector on the 400B2 adapter.
5. Plug the power supply unit into a 120 VAC, 60 Hz outlet.

NOTE:

Make certain that the AC outlet to which you connect the power supply is unswitched (for example, not controlled by a wall switch or light dimmer).

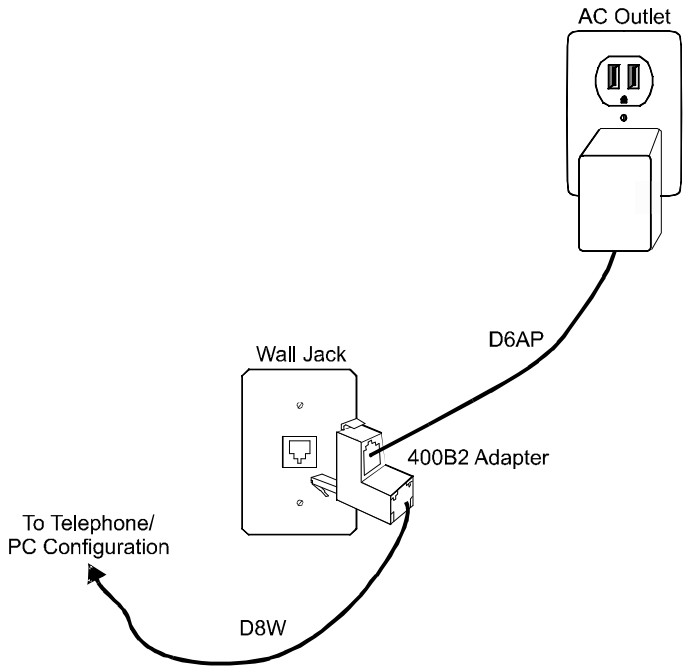

Figure 1-6. Attaching the KS-22911,L2 Power Source

If you are using an MSP-1 power source (see Figure 1-7):

1. Plug the remaining end of the D8W cord (from the PC/Telephone configuration you assembled earlier) into the connector labeled “Phone” on the power supply.
2. Insert one end of the second D8W cord into the connector labeled “Line” on the power supply.
3. Insert the remaining end of the second D8W cord into the PBX wall jack.
4. Plug the power supply cord into the power supply unit.
5. Plug the other end of the power supply cord into an appropriate AC outlet. If the power supply cord provided with the MSP-1 Power Supply is not compatible with your AC outlet, you may either:
   - use an adapter to conform to local blade arrangement, or
   - use a replacement cord if an appropriate adapter is not available.

NOTE:

Make certain that the AC outlet to which you connect the power supply is unswitched (for example, not controlled by a wall switch or light dimmer).

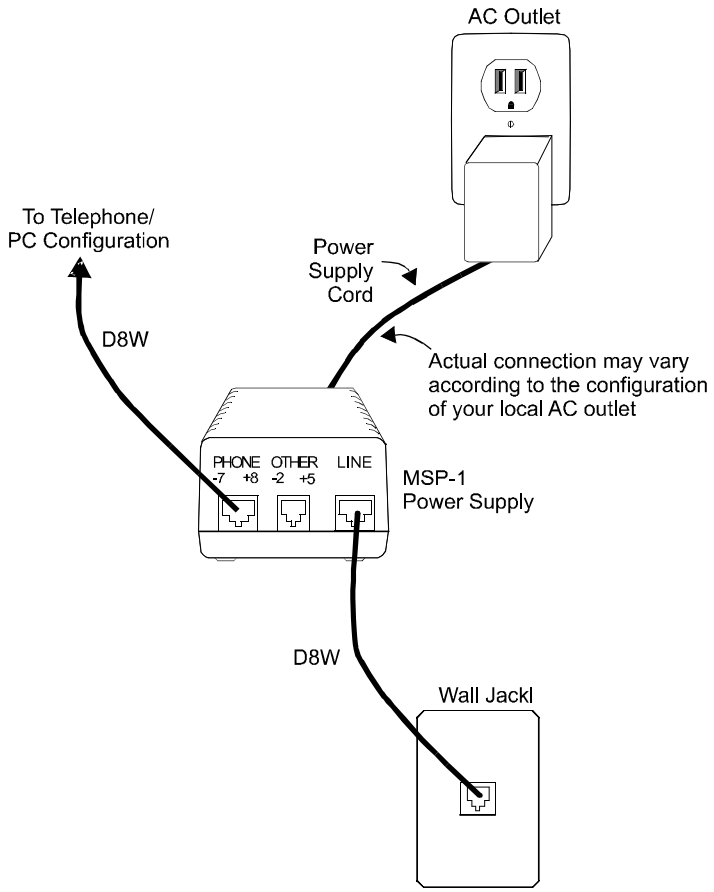

Figure 1-7. Attaching the MSP-1 Power Source

Installing the PC Console Software

To install the PC Console software:

1. Insert the PC Console CD in the CD-ROM drive. (The instructions in this section assume that you are using drive **d**. If this is not the case, substitute **d** with the appropriate drive letter.)
2. Access your Desktop or the Program Manager screen.
3. Select **Start-Run** or **File-Run**.
   - The **Run** dialog box is displayed.
4. Type **d:setup**
5. Click **OK**.
   - The **Welcome** screen is displayed.
6. Click **Next**.
   - The **Select Destination Directory** dialog box is displayed.
7. If you want to install the PC Console software to a directory other than the indicated default, or you want to install it onto a LAN server, select that location now.

NOTE:
The PC Console database files can be installed on your network to allow file sharing with other console operators. If you select this type of installation, also install and maintain a local copy of the database information on the hard drive of each PC that may require access to this information. In the event of a LAN failure, PC Console will switch to the local copy of the database information that allows it to place and receive phone calls.

Under no circumstances should you try to install or run the file named pccon2.exe off the LAN. This is the executable file for the actual PC Console software. It is specifically designed for a single user, and must reside on your local hard drive.

NOTE:
If you are upgrading or reinstalling the PC Console software, you will see a message later indicating that the directory already exists. You can safely reinstall to the same directory. The PC Console installation program will automatically create a backup directory of the previously installed software, in a location that you can specify.

8. If the destination directory you are about to select does not yet exist, skip to Step 13.
9. Click **Next**.
   - The **Backup Replaced Files** dialog box is displayed.

     If you do not want to retain a copy of your previously installed PC Console files, click **No** and skip to Step 12. Otherwise, click **Yes**.
10. Click **Next**.
    - The **Select Backup Directory** dialog box is displayed.
11. Select the directory into which the old PC Console files should be placed.
12. If you are using Windows 95 or Windows NT 4.x, skip to Step 15.
13. Click **Next**.
    - The **Select Program Manager Group** dialog box is displayed.
14. If you want your PC Console icons to reside in a program group other than the indicated default, select that program group now.
15. Click **Next**.
    - The **Select Communication Port** dialog box is displayed.
16. Use the cursor keys or mouse to indicate which COM Port (on the PC) you will use to physically connect the PC to the telephone or PassageWay Adapter.
17. Click **Next**.
    - The **Ready To Install** dialog box is displayed.
18. Click **Next**.
    - If you are upgrading or reinstalling the PC Console software, you will see several messages indicating that the directory already exists. You can safely respond to each by clicking **OK** to reinstall to the same directory. The PC Console installation program will automatically create a backup directory of the previously installed software, in the specified location.

- The installation process begins. It takes approximately four to five minutes to install the contents of the CD-ROM to your computer.
- When the process is complete, the **Installation Completed** dialog box is displayed.

19. Click **Finish**.
    - If you are using Windows NT or Windows 95 and any system files were updated during the installation process, the **Restart Computer** dialog box is displayed. Click **OK** to restart your computer.

Administering the PC Console Software

Once the software is installed you can successfully administer PC Console.

- **If you have performed an upgrade from a previous version of PC Console,** you must administer several new capabilities of PC Console.
- **If this is a new installation,** you will need to administer PC Console. Essentially, this involves launching and naming your PC Console system, creating attendant profiles, identifying button functions, and assigning the appropriate system parameters.

To administer the PC Console software following a product upgrade:

1. Access your Desktop or the Program Manager screen.
2. Double-click on the **Console Administration** icon.
   - The PC Console splash screen is displayed, followed by the PC Console Login window.
3. Enter a new system name, and type a new password to be associated with that system.

   NOTE:
   Although you named your system prior to this upgrade, you must rename it now. In the next few steps, you will restore all of the information previously saved in the old version of PC Console.

4. Click **OK** or press **ENTER**.
   - The PC Console Login window is redisplayed, and the screen prompts you to reenter the identical password. (This is done for verification purposes.)
5. Type the password again, exactly as you typed it before.

6. Click **OK** or press **ENTER**.
   - The **New Password Confirmed** dialog box is displayed.
7. Click **OK** or press **ENTER**.
8. Select **Administration-Upgrade-Administration** from the Menu Bar.
   - The software attempts to locate the System Database last used by PC Console. It looks for a file named pccon.mdb in the pccon\admin directory.
     - If it is able to locate the pccon.mdb file, it copies the old information to the new System Database, with the exception of any records that would create duplicate entries in your new database.
     - If the software cannot locate the pccon.mdb file, a dialog box is displayed asking you to identify the old System Database. Locate and select the appropriate pccon.mdb file; then click **OK** or press **ENTER**. PC Console copies the old information to the new System Database, with the exception of any records that would create duplicate entries in your new database.
   - When the System Database has been successfully upgraded, a confirmation message is displayed at the bottom of the screen.

   If your version of PC Console includes any custom languages, continue to the next step.

   If your version of PC Console does *not* include any custom languages, skip to Step 11.

9. Select **Administration-Upgrade-Language** from the Menu Bar.
   - The software attempts to locate the Language Database last used by PC Console. It looks for a file named pcclang.mdb in the pccon\admin directory.
     - If it is able to locate the pcclang.mdb file, it copies the old information to the new Language Database, with the exception of any records that would create duplicate entries in your new database.
     - If it is not able to locate the pcclang.mdb file, a dialog box is displayed asking you to identify the old Language Database. Locate and select the appropriate pcclang.mdb file; then click **OK** or press **ENTER**. PC Console copies the old language information to the new Language Database, with the exception of any records that would create duplicate entries in your new database.

- When the Language Database has been successfully upgraded, a confirmation message is displayed at the bottom of the screen.

10. For each custom language already defined in your PC Console environment, locate and translate the new terms that will appear within the PC Console screens. (Refer, if necessary to the section "Creating Custom Languages" in Chapter 3, "Console Administration.") You must complete this translation process before your custom language can be used.
11. Label the PC Console display buttons to match the display buttons administered at the switch for the Attendant Console. (Refer, if necessary to the section "Identifying Button Functions" in Chapter 3, "Console Administration.")
12. Select **Administration-Upgrade-Directory** from the Menu Bar.
    - The software attempts to locate the Directory Database last used by PC Console. It looks for a file named dir.mdb in the pccon\direc directory.
      - If it is able to locate the dir.mdb file, it copies the old information to the new System Database.
      - If the software cannot locate the dir.mdb file, a dialog box is displayed asking you to identify the old Directory Database. Locate and select the appropriate dir.mdb file; then click **OK** or press **ENTER**. PC Console copies the old information to the new Directory Database.
    - When the Directory Database has been successfully upgraded, a confirmation message is displayed at the bottom of the screen.
13. Select **Administration-Exit** from the Menu Bar.
14. Turn to Chapter 3, "Console Administration," and follow the step-by-step procedures required to finish turning up your PC Console system. Specifically, you must verify that your attendant profiles are correct, that the button function assignments are correct, and that the appropriate system parameters has been defined. You may also need to complete any partially-created custom languages so they may be used in your environment.

To administer the PC Console software for a new installation:

1. Access your Desktop or the Program Manager screen.
2. Double-click on the **Console Administration** icon.
    - The PC Console splash screen is displayed, followed by the PC Console Login window.

3. Enter a new system name, and type a new password to be associated with that system.

   NOTE:
   You must name your system the first time you access the PC Console application. If necessary, you can change this name later, from within the PC Console software.

   You will need to know the password, that you are assigning now, whenever you make administrative changes to the PC Console application. You can also use this password to launch the PC Console Operations application.

4. Click **OK** or press **ENTER**.
   - The PC Console Login window is redisplayed, and the screen prompts you to reenter the identical password. (This is done for verification purposes.)
5. Type the password again, exactly as you typed it before.
6. Click **OK** or press **ENTER**.
   - The **New Password Confirmed** dialog box is displayed.
7. Click **OK** or press **ENTER**.
8. Select **Administration-Exit** from the Menu Bar.
9. Turn to Chapter 3, “Console Administration,” and follow the step-by-step procedures required to finish turning up your PC Console system. Specifically, you need to create your attendant profiles, identify the button functions in PC Console, and assign the appropriate system parameters. You can also create custom languages, if any are required in your environment.

Administering the PhoneLine MasterDirectory Software

Once the software is installed on your PC, you will need to use the PhoneLine MasterDirectory portion to build the various directories that contain information about the people in your environment.

You can create and use up to four PC directories in PC Console. Each directory is actually a database created and maintained by the PhoneLine MasterDirectory software.

To administer the PhoneLine MasterDirectory software:

1. Read Chapter 4, “Directory Administration,” of this document. This short chapter provides a brief overview of the relationship between PC Console and the PhoneLine MasterDirectory software.
2. Once you have read Chapter 4, refer to the PhoneLine MasterDirectory User’s Guide for the step-by-step instructions to build your directories. You can create up to four directories, each containing information about the people in your environment.

Confirming the Operation of Your Telephone

Next, you must verify that your telephone is operating an Attendant Console.

If you are using an 8411 or CallMaster VI telephone:

1. Press the **Speaker** button on the telephone. Verify that the red LED associated with this button is lighted, and that dial tone is *not* heard. (This is an indication that PC Console is correctly administered as a 302 Attendant Console.)

NOTE:
The analog jack on the back of the 8411 telephone is inoperable when used with PC Console.

If you are using a DCP telephone and PassageWay Adapter:

1. Verify that the red light is glowing steadily on top of the PassageWay Adapter.
2. Press the **Speaker** button on the telephone. Verify that the red LED associated with this button is lighted, and that dial tone is *not* heard. (This is an indication that PC Console is correctly administered as a 302 Attendant Console.)

This completes the installation process for the PC Console system.

If you are not already familiar with PC Console, read Chapter 2, “Understanding PC Console.” There you will learn about the functions and capabilities of your new PC Console system.

Understanding PC Console

2

Welcome

Congratulations on your purchase of Lucent Technologies' PC Console — the elegant solution to your call handling needs in a PC environment.

PC Console offers all of the capabilities of a hardware Attendant Console; plus the ability to share information across your organization, personalize your screen displays, and manage your call handling tasks more quickly and efficiently.

This chapter provides a quick synopsis of PC Console's capabilities. It is intended to introduce the new user to basic PC Console concepts, and to introduce new features to the experienced PC Console user.

An Overview of PC Console

PC Console was created to accommodate your attendant's call handling needs. PC Console allows you to:

- Access and update information that is shared across a Local Area Network
- Personalize the screens that each attendant uses; even creating or modifying the language of the interface
- Navigate through the call handling areas smoothly
- Check the status of any extension in your environment
- Locate any person in your environment by searching through a PC Console database

- Place a call directly to a found entry in the PC Console database by clicking the **Call** button, or by pressing **ENTER**
- Immediately access on-line help information

Each of these capabilities is discussed in this chapter.

Sharing Information within PC Console

PC Console was designed to share information across your organization. During the installation and administration of PC Console, your administrator creates and "points to" several databases; each containing information that all console operators can share.

Database information can be stored locally, or on a Local Area Network drive. For backup purposes, a database can be co-located; accessed off of the Local Area Network, with an automatic switch to the local hard drive if the network drive becomes unavailable.

Personalizing Screens in PC Console

PC Console allows the administrator to select the language that each user sees on the PC Console screens. The administrator can also modify an existing language set to conform to a local dialect; or, if necessary, create an entirely new interface language.

In addition, the administrator can specify which attendants prefer Help Tip displays, and which attendants want the Auto Transfer capability to complete their transfers automatically. You can override this "profile" information at any time, by changing your preferences during any PC Console session. The changes you make only affect the current session; they do not become a permanent part of your profile.

Navigating through the PC Console Screens

PC Console is partitioned into the following functional areas.

F1 The Help screen information that provides immediate on-line help.

F2 The Busy Lamp Field that identifies, and provides access to, each extension in your environment. You can also click to select a particular Trunk Group or Hundreds Group button.

F3 The feature buttons that allow you to perform the same function as feature buttons on a hardware console.

F4 The PC Directories that allow you to locate and call a person, based upon their entry in a PC Console database.

F5 The Call Handling area; from which you answer, place, hold, split, transfer, conference, and release calls.

Help Information

To get immediate on-line help, press **F1**. You can find information by subject matter, search by a word or phrase, or jump between related subjects quickly to locate the information you need.

Busy Lamp Field

To move quickly to the Busy Lamp Field area, press **F2**. This area of the screen turns blue to indicate it is active. From this area, you can:

- Click a Trunk Group button, to access a particular trunk group. The button turns white to indicate it is active. Now you can follow your normal dialing procedure, using either your keyboard or telephone keypad, to dial the outbound number.

  If the Trunk Group button should turn pink, this is a warning signal. It indicates that the trunk group is operating at 50% of available capacity. If the Trunk Group button turns red, this is a busy signal. It indicates that the trunk group has reached 100% of available capacity.
- Click a numbered Hundreds Group button, to access a group of extensions. All of its administered extensions are displayed. Busy extensions appear in dark blue, and idle extensions appear in light blue. To find out the name of the person at any extension, use your *right* mouse button to click that extension. A Help Tip box, containing the person's extension and name, is immediately displayed. To dial the extension, use your *left* mouse button to click the extension number.

  The selected Hundreds Group button is displayed in white. Any other Hundreds Group buttons remain in gray.

Feature Buttons

To move quickly to the Feature Button area, press **F3**. This area of the screen turns blue to indicate it is active.

The Feature Button area displays the short name assigned to every feature button administered for PC Console. To get a longer description of any feature button, position your cursor over the button. Assuming the administrator has enabled Help Tips, a Help Tip box containing a description of that button is displayed.

Feature buttons are used in exactly the same manner as feature buttons on a hardware console. Click the button to perform a particular task. For example, clicking the **Integrated Directory** feature button (usually labeled something like "IntgrDir") accesses the Integrated Directory feature on the switch. When the button is activated, it turns white. If it is deactivated, it turns gray. If the switch needs to communicate a problem to you (such as a denied feature), the button turns pink; the equivalent of flashing on a hardware console.

If the **Position Busy** feature button should turn blue, this indicates that all positions are either busy or unavailable.

Five feature buttons are on every PC Console — Split, Hold, Forced Release, Position Busy, and Night Service. Your system administrator can assign the remaining buttons as optional feature buttons; thus giving you access to the various switch features.

Display Buttons

Display buttons may appear when you activate a feature. To look at the Display Button area, click the button labeled **Display**. The Display Button screen opens, and turns blue to indicate that it is active.

The Display Button area indicates the short name assigned to every display button administered for PC Console. To get a longer description of any display button, position your cursor over the button. Again, if the administrator has enabled Help Tips, a Help Tip box containing a description of that button is displayed.

Display buttons are used in exactly the same manner as display buttons on a telephone or hardware console. Click the button to perform a particular task. For example, if you are using the Integrated Directory feature, clicking the **Next** button advances to the next entry in the list. When a button is activated, it turns white. When it is deactivated, it turns gray.

PC Directories

There are several ways to move quickly to the PC Directories area. You can do any of the following:

- Click the icon associated with the desired directory.
- Press and hold the **ALT** key, then press the number associated with the desired directory.
- Press **F4** to move to the PC Directory area, use the **TAB** key to select the desired directory, then press **ENTER**.

The PC Directory screen opens.

PC Console can have up to four directories; each containing information about the people in your environment. This may include each person's first name, last name, phone number, and other pertinent pieces of information; as well as any notes that you have saved with the person's record.

You can use this information to locate anyone in your environment — searching for them by any field; or calling them by pressing **ENTER** or clicking the **Call** button.

You can also add, edit, and delete individual entries in *any* of the PC Console directories. You may also be able to attach notes to these entries; reminding yourself and others of vacation or travel status, hours available, or any other information that may be helpful when handling calls for the person.

To search for an entry in a PC Console directory, use the **Search By** box to select the field name that corresponds to the type of search you want to perform. In the box labeled **Search For**, type the string of text that you want PC Console to locate. As you type, PC Console jumps to the first record that matches the string you have entered thus far. Click to pick the record you want.

To close this window, click its **Quit** button.

Call Handling Area

To move quickly to the Call Handling area, press **F5**. This area of the screen turns blue to indicate it is active. From the Call Handling area, you can answer, place, hold, split, transfer, conference, and release calls.

The Call Handling area displays six “call bars,” each providing information about one phone call that you are currently handling.

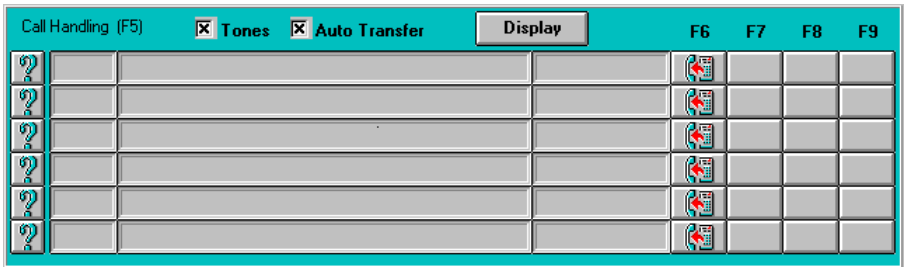

Starting at the left, each call bar displays:

- An Information icon . You can click this icon at any time to retrieve the caller identification for that call.
- The call’s hold cycle and holding-time, indicated in minutes and seconds.
- The letter identification assigned to this call appearance. You will recognize this as the standard call appearance on a hardware console.
- A “notepad” area containing any temporary notes you have entered for this call.

- Your available options, illustrated graphically, as indicated in the following table of icons.

Icon	What it does	The function key that also accesses this call handling option
	Add	**F6**
	Answer	**F6**
	Call	**F6**
	Cancel	**F7**
	Conference	**F9**
	Forced Release	**F9**
	Hold	**F7**
	Release	**F8**
	Retrieve	**F7**
	Transfer	**F6**

To handle a call, or receive additional information about a particular call, click on the call bar associated with that call. The call becomes the “current call,” and its call bar is displayed with a blue border to help you distinguish it at a glance. The Second Party Display, located at the bottom of your screen, shows any additional information that is available for this call.

For example, when an incoming call arrives, your screen will display information about that call. Specifically, the following will occur:

- You hear ringing.
- The Call icon is replaced with an Answer icon .
- The call bar changes to white.

- When you move your cursor to that call bar, the Second Party Display at the bottom of your screen identifies the called party. This information, if available, is pulled from the primary PC Directory.

To answer the incoming call, you click the Answer icon .

- The ringing stops.
- You are connected to the calling party.
- Now you see a Transfer , Hold , Release and Conference icon on the call bar.

The icons themselves are displayed as needed. If an icon cannot be used on the current call, it is removed from the call bar. This allows you to quickly access all of the appropriate functions, while removing any clutter from the screen.

To hold the call, you click its Hold icon .

- The call is placed on hold.
- The Transfer , Hold , Release and Conference icons disappear.
- A Retrieve icon is displayed on the call bar.
- The timer on the left side of the call bar keeps track of the call's hold cycle and hold time. The hold cycle tells you how many times this call has been placed on hold, and the hold time tells you how long it has been on hold in the current cycle.
- The call bar itself changes to pink. This indicates that the call is on hold. If the call bar were to turn red, this would indicate that the call had been on hold for longer than a preset threshold.

To retrieve the held call, click the Retrieve icon .

- The held call is retrieved.
- The Retrieve icon disappears.
- The Transfer , Hold , Release and Conference icons are redisplayed on the call bar.

There are two checkboxes located above the call bars, labeled **Tones** and **Auto Transfer**. You can check or uncheck these boxes to temporarily enable or disable the sending of audible tones during normal dialing, and to enable or disable the Auto Transfer capability.

Some applications and components (like voice mail) require that tones be sent, or not sent. However please note that if Auto Start is administered on your switch, you must specify that tones *are not* sent during dialing. Therefore, you would leave the box unchecked.

The last portion of the screen is the Alarm and Status Panel. It is located in the lower right corner of your screen, and exists strictly to give you feedback information. There may be up to six messages displayed in this area:

- **Alarm** indicates a system problem has been detected.
- **Alarm Reported** indicates that the system has alerted the maintenance organization of the detected problem.
- **Calls Waiting** indicates that one or more calls are waiting in the general attendant queue.
- **Calls Waiting Warning** indicates that the number of calls in the queue has reached a preset threshold.
- **Individual Calls Waiting** indicates that one or more calls directed to your personal extension (not the “0” extension) are waiting.
- **Position Available** indicates that your position is available to receive calls.

All of the procedures you will use for general call handling are outlined, in detail, in Chapter 5, “Console Operations.” If you are a new user, be certain to read *all* of Chapter 5 to become proficient as a PC Console attendant. Once you are comfortable with these new procedures, you may prefer the Quick Reference card, as a reminder.

And once again... welcome to PC Console!

Console Administration

3

Overview

The term “Console Administration” refers to a collection of procedures. These are the procedures that you, as System Administrator, will use to define your environment. This includes identifying the users who are authorized to access the PC Console system, and specifying how the buttons are configured at the switch by configuring them the same way within the PC Console software.

In addition, you can decide what language each user will see on the PC Console screens. You can also modify an existing language set to conform to a local dialect; or, if necessary, create an entirely new interface language. The terms that you define will appear on PC Console’s operating screens.

NOTE:
If you are upgrading your PC Console installation, refer to Chapter 2, “Installation,” for the procedures to upgrade your database information and any available custom languages.

Accessing the Console Administration Area

To access the console administration area:

1. Close any open PC Console application.
2. From your Desktop or the Program Manager screen, locate the PC Console program group (or the program group containing the PC Console application icons).
3. Double-click on the **Console Administration** icon.
   - The entry window is displayed.
4. Type the system name and password.
5. Click **OK** or press **ENTER**.
   - The Console Administration screen is displayed.

Assigning Attendant Profiles and Passwords

The Attendant Management folder allows you to add, change, or delete profile information for yourself, or for any other PC Console attendant.

To add a new attendant:

1. Click the **Attendant Management** folder.
2. Click **Add**.
3. Type a login name for the new user and press **ENTER**.
   - The highlighting moves to a button labeled **Password**.
4. Click **ENTER**.
5. Type the password that the user will require to gain entry to PC Console, then press **ENTER**.
6. Re-type the new password (for verification purposes), and again press **ENTER**.
7. Select the appropriate responses to each of the following. This profile information will be saved, along with the new user's name and password.
   - **Language.** Select an interface language for the user. The language that you specify will determine what the user sees on the PC Console administration and operating screens, as well as prompts, messages, and other information.

— **Auto Transfer.** Check this box if the user wants calls to be transferred automatically; without operator announcement. This feature reduces the number of steps required to transfer a call.

NOTE:
If Auto Transfer is not enabled for a particular attendant, the attendant can temporarily override this instruction by checking a box labeled “Auto Transfer” on the PC Console Operations screen. Checking this box will cause all calls to be transferred automatically until the box is unchecked again.

— **Help Tip Visible.** Check this box if the user wishes to see the “Help Tips” that provide a short description of the button over which the cursor is positioned.

8. Click **Save**.
   - The new user and his/her profile are added to the list of authorized PC Console attendants.

To delete an existing attendant:

1. Click the **Attendant Management** folder.
2. Highlight the name of the user that is to be deleted.

NOTE:
It is not possible to delete your system name in the list of users.

3. Click **Delete**.
   - A message box asks for confirmation of this deletion.
4. Click **Yes**.
   - The user’s name and profile are deleted from the list of authorized attendants.

To change the profile for an existing attendant:

1. Click the **Attendant Management** folder.
2. Highlight the name of the user whose profile is to be modified.
   - The screen displays profile information for the highlighted user.

3. Make the appropriate changes to the following profile information:
   - **Language.** Select an interface language for the user. The language that you specify will determine what the user sees on the PC Console administration and operating screens, as well as prompts, messages, and other information.
   - **Auto Transfer.** Check this box if the user wants calls to be transferred automatically; without operator announcement. This feature reduces the number of steps required to transfer a call.

     NOTE:

     If Auto Transfer is not enabled for a particular attendant, the attendant can temporarily override this instruction by checking a box labeled “Auto Transfer” on the PC Console Operations screen. Checking this box will cause all calls to be transferred automatically until the box is unchecked again.

   - **Help Tip Visible.** Check this box if the user wishes to see the “Help Tips” that provide a short description of the button over which the cursor is currently positioned.
4. Click **Save**.
   - The user’s modified profile is saved.

Identifying Button Functions

Administering the buttons for PC Console is one of the steps required to define your operating environment. Use the following procedures to specify how the buttons are configured at the switch, by configuring them the same way within the PC Console software.

It is important to recognize that this area of PC Console is strictly used to indicate to the attendant *how* your switch is configured. If you reconfigure button functions at the switch, you must likewise reconfigure the corresponding PC Console buttons. Otherwise, the PC Console user will have no way of knowing that the function assigned to the button has changed. Changing the label alone, within PC Console, does not inherently change its function at the switch.

To access the Button Identification area of PC Console:

1. From the Attendant Management folder, click the tab labeled **Button Identification**.
   - The Button Identification screen displays your options. Here, you can identify the buttons associated with any of the following:

— Trunk Groups

— Hundreds Groups, and their associated Busy Lamp Fields

— Feature Buttons

— Display Buttons

To label the Trunk Group buttons:

1. From the Button Identification area, click the button labeled **Trunk Groups**.
   - Twelve Trunk Group buttons, initially unlabeled, are displayed across the screen.

     These buttons perform the same function as Trunk Group buttons on a non-PC based attendant console. Specifically, they allow the attendant to select an outgoing trunk group. They can also be used to select a code-calling or loudspeaker paging zone.

     Each of these buttons must be labeled to identify the trunk group with which it is associated. This is typically accomplished by labeling each Trunk Group button according to the corresponding location. For example, your buttons might be labeled “LA,” “Dallas,” “NY,” and so forth.
2. Label each Trunk Group button, just as it is administered at the switch.

   NOTE:
   Each button label can hold a maximum of six characters.
3. When you are finished making changes, click **Save**.
   - Your changes are saved.

To label the Hundreds Group buttons and associated Busy Lamp Fields:

1. From the Button Identification area, click the button labeled **Hundreds Groups**.
   - Twenty Hundreds Group buttons, initially unlabeled, are displayed across the screen.

     When in the Console Operations area, each administered Hundreds Group button will correspond to 100 Busy Lamp Fields.

2. Label each Hundreds Group button, just as it has been administered at the switch.

   The label you assign to each Hundreds Group button should reflect the first digit (or group of digits) for the associated extensions. For example:

   - If your dialing plan has 3-digit extensions, you could conceivably have 1000 extensions — 000 through 999. You would therefore assign up to 10 Hundreds Group buttons at the switch, and duplicate their assignments here. The first Hundreds Group button would handle extensions 000 through 099. The second would handle extensions 100 through 199, and so forth. The extensions themselves would automatically be labeled within the grid that is displayed to the attendant (000 through 099, and 100 through 199), and the corresponding Hundreds Group button would be labeled with the group's prefix — in this example, 0 and 1.
   - If your dialing plan has 5-digit extensions, and you have 500 extensions — for example 10000 through 10499, you would assign 5 Hundreds Group buttons. The first Hundreds Group button would handle extensions 10000 through 10099. The second would handle extensions 10100 through 10199, and so forth. The extensions themselves would automatically be labeled within the grid, and the corresponding Hundreds Group button would be labeled with the group's prefix — in this example, 100 or 101.

   NOTE:
   Each button label can hold a maximum of three characters.

3. When you are finished administering the Hundreds Group buttons, click **Save**.
   - Your changes are saved.

To label the feature buttons:

1. From the Button Identification area, click the button labeled **Feature Buttons**.
   - Twenty-four feature buttons are displayed in two columns near the right side of the screen. Some feature buttons are labeled with feature names, and others are labeled with numbers.

These buttons perform the same function as feature buttons on a non-PC based attendant console. They are used to access and perform pre-determined functions. For example, an **Integrated Directory** feature button accesses the Integrated Directory feature on the switch.

If a button is labeled with a feature name, the button is "administered," and may be used by the attendant. If a button is labeled with a number, the button is not "administered." It performs no function within PC Console and is not displayed to the attendant.

- The Feature Button Definition Table on the left side of the screen allows you to identify the purpose, label, and relative location of each feature button that is administered for your system.
  - "Term" is a long description of the button's function. It may be up to 60 characters in length. This is the description that can be displayed as a Help Tip when the user positions the cursor over the button.
  - "Label" is the short description that will appear on the button within the PC Console screens. It may be up to 8 characters in length.
  - "Number" indicates where the button will reside within the two-column table on the right side of the screen. The number 1 indicates the top left position. The number 24 indicates the bottom right position.

  The buttons that you administer, label, and position here will appear on the Console Operations screen that is used by the attendant.

  If an entry in the Feature Button Definition Table appears in red, this indicates that the feature is required for PC Console. You cannot delete this entry. The required feature buttons and their default positions are indicated below:

Default Button Number	Button Assignment
1	Split
6	Hold
19	Forced Release
23	Night Service
24	Position Busy

If an entry in the Feature Button Definition Table appears in blue, this indicates that the feature is *not* required for PC Console. If, however, you wish to administer that particular feature button, you must do so utilizing the line that the partially-created button already occupies. For example, if you want to administer an **Integrated Directory** feature button, you must use the line already labeled "Integrated Directory," and simply supply the label for the button, and the number that specifies its position within the two-column table.

2. Make any required changes to the feature button labels to synchronize their functions with those already administered for the console at the switch.

   - To add a new feature button, click on an empty line within the Feature Button Definition Table. In the left cell, type a long description (up to 60 characters) that will be displayed as the button's Help Tip. In the center cell, type the short label (up to 8 characters) that will appear on the button. In the right cell, type the position (1 through 24) that this feature button will occupy. You can select from the button positions that have not yet been assigned to other feature buttons.
   - To change an existing feature button, click on the cell whose contents are to be changed. Use the standard Windows editing features to position your cursor and edit the field, as appropriate.
   - To delete an existing feature button, you must clear the contents of all three cells associated with that button. Beginning with the left-most cell, double-click on the cell to highlight its contents. Press **DELETE**. Repeat this procedure until all three associated cells are empty.

NOTE:

If an entry in the Feature Button Definition Table appears in red, this indicates that the feature is required for PC Console. You cannot delete this entry. In addition, you must make certain that the identical feature button assignments have been made on the switch, so that PC Console can communicate successfully with the switch.

A Helpful Hint: Avoid assigning labels that could confuse the attendant. For example, do not use the label "Directory" to describe the Integrated Directory feature button. This could easily be mistaken for the PC Console Directory function.

3. When you are finished making changes, click **Save**.

   Your changes are saved.

To label the display buttons:

1. From the Button Identification area, click the button labeled **Display**.

   - Eight display buttons are displayed on the screen. Some display buttons are labeled with names, and others are labeled with numbers.

     These buttons perform the same function as display buttons on a non-PC based attendant console. They are used to access and perform pre-determined functions. For example, the **Next** display button cycles to the next entry in a displayed list.

     If a button is labeled with a name, the button is “administered,” and may be used by the attendant. If a button is labeled with a number, the button is not “administered.” It performs no function within PC Console and is not displayed to the attendant.

   - The Display Button Definition Table on the left side of the screen allows you to identify the purpose, label, and relative location of each display button that is administered for your system.

     — “Term” is a long description of the button’s function. It may be up to 60 characters in length. This is the description that can be displayed as a Help Tip when the user positions the cursor over the button.

     — “Label” is the short description that will appear on the button within the PC Console screens. It may be up to 8 characters in length.

     — “Number” indicates where the button will reside within the two-column table on the right side of the screen. The number 1 indicates the first position. The number 8 indicates the last position.

     The buttons that you administer, label, and position here will appear on the Console Operations Display screen that is used by the attendant.

If an entry in the Display Button Definition Table appears in blue, this indicates that the feature is optional, but the display button name is locked and cannot be changed. You can, however, change the button label, as well as the number that specifies its position within the two-column table. The required display buttons and their default positions are indicated below:

Default Button Number	Button Assignment
1	Normal
4	Next
6	Return Call

2. Make any required changes to the display button labels to synchronize their functions with those already administered for the console at the switch.
   - To add a new display button, click on an empty line within the Display Button Definition Table. In the left cell, type a long description (up to 60 characters) that will be displayed as the button's Help Tip. In the center cell, type the short label (up to 8 characters) that will appear on the button. In the right cell, type the position (1 through 8) that this display button will occupy. You can select from the button positions that have not yet been assigned to other display buttons.
   - To change an existing display button, click on the cell whose contents are to be changed. Use the standard Windows editing features to position your cursor and edit the field, as appropriate.
   - To delete an existing display button, you must clear the contents of all three cells associated with that button. Beginning with the left-most cell, double-click on the cell to highlight its contents. Press **DELETE**. Repeat this procedure until all three associated cells are empty.

   NOTE:
   If an entry in the Display Button Definition Table appears in blue, this indicates that the feature is optional, but the display button name is locked and cannot be changed. You can, however, change the button label, as well as the number that specifies its position within the two-column table.

3. When you are finished making changes, click **Save**.

   Your changes are saved.

Defining System Parameters

The System Parameters function allows you to define *where* the various system components are physically stored. Here, you will specify to which COM port the telephone or PassageWay Adapter is connected, and where the database information that drives PC Console resides.

- **System Database** — This is the Microsoft Access® database that contains the label information you have saved for each button on the PC Console screens. Attendant profile information is stored here, as well. Its default location is pccon2\admin\pccadmin.mdb.
- **Language Database** — This is the Microsoft Access database that contains standard, or possibly customized, language translations. Each entry in the far left column indicates the original English term to be translated. Its translated values (one per "remembered" language), appear alongside it in each successive column. Its default location is pccon2\admin\pcclang2.mdb.
- **System Log File** — This is the log of user and administrator activity within PC Console. The System Log File identifies each person that has accessed a PC Console function. It also indicates what functional area was accessed, and provides an associated date and time stamp. Its default location is pccon2\admin\syslogin.txt.
- **Upload File** — This is the database file that receives information uploaded from the switch's Integrated Directory. By default, it is located in pccon2\direc\ and named upload.md.
- **PC Directory Files** — These are the database files that contain names, addresses, and telephone numbers for the people who may originate or receive calls through the switch connected to PC Console. By default, they are located in pccon2\direc\ and named sequentially — dir1.md, dir2.md, dir3.md, and dir4.md.
- **COM Port** — This is the communications (COM) port on the back of the PC to which the telephone or PassageWay Adapter is *physically* connected.
- **Tones** — This indicates whether PC Console will send audible tones during dialing sequences. Some applications and components require that tones be sent, or not sent. Note that if Auto Start is administered on your switch, you must specify that tones *are not* sent during dialing.

NOTE:
If your system is administered to *not* send tones, the attendant can temporarily override this instruction by checking a box labeled "Tones" on the PC Console Operations screen. Checking this box will cause the audible tones to be sent until the box is unchecked again.

- **Companding** — This option is set, by default for Mu-Law. Leaving this default permits the system to digitize voice signals according to accepted Mu-Law standards. Setting this option to A-Law requires the system to digitize voice signals according to accepted A-Law standards.
- **Second Party Display** — This setting determines which information will be displayed in the Second Party Display area (within Call Handling) on the Console Operations screen during a multiple-party call . If “Coverage Point” is selected, then information for the intended receiver is displayed. If “Originator” is selected, then information for the dialing party is displayed. The default selection for this setting is “Originator.”

To access the System Parameters area of PC Console:

1. From the Attendant Management folder, click the tab labeled **System Parameters**.
   - The System Parameters screen lists the location of each data directory that is associated with PC Console. It also displays the various system settings that determine how PC Console responds to instructions from the attendant.

To “point to” a different System Database File:

1. From the System Parameters screen, locate and click on the button labeled **System Database**, on the left side of the screen.
   - The display to its right indicates where the PC Console application currently looks for the file (“Current Path”).
2. Position your cursor in the “Change To” text box, then modify the path to indicate where the file actually resides. You may alternatively click the **Change To** button, highlight the appropriate file, and click **OK**.
3. Click **Save**.
   - Your changes are saved.

To “point to” a different Language Database File:

1. From the System Parameters screen, locate and click on the button labeled **Language Database**, on the left side of the screen.
   - The display to its right indicates where the PC Console application currently looks for the file (“Current Path”).
2. Position your cursor in the “Change To” text box, then modify the path to indicate where the file actually resides. You may alternatively click the **Change To** button, highlight the appropriate file, and click **OK**.
3. Click **Save**.
   - Your changes are saved.

To "point to" a different System Log File:

1. From the System Parameters screen, locate and click on the button labeled **System Log File**, on the left side of the screen.
   - The display to its right indicates where the PC Console application currently looks for the file ("Current Path").
2. Position your cursor in the "Change To" text box, then modify the path to indicate where the file actually resides. You may alternatively click the **Change To** button, highlight the appropriate file, and click **OK**.
3. Click **Save**.
   - Your changes are saved.

To "point to" a different Upload File:

1. On the left side of the System Parameters screen, locate and click on the button labeled **Upload File**, on the left side of the screen.
   - The display to its right indicates where the PC Console application currently looks for the file ("Current Path").
2. Position your cursor in the "Change To" text box, then modify the path to indicate where the file actually resides. You may alternatively click the **Change To** button, highlight the appropriate file, and click **OK**.
3. Click **Save**.
   - Your changes are saved.

To "point to" a different PC Directory File:

1. On the left side of the System Parameters screen, locate and click on the Directory (1, 2, 3, or 4) whose path you wish to change.
   - The display to its right indicates where the PC Console application currently looks for the file ("Current Path").
2. Position your cursor in the "Change To" text box, then modify the path to indicate where the file actually resides. You may alternatively click the **Change To** button, highlight the appropriate file, and click **OK**.
3. Click **Save**.
   - Your changes are saved.

To "point to" a different COM Port:

1. From the System Parameters screen, locate and click on the down arrow next to the name of the currently administered COM port.
   - A dropdown list box indicates four COM port addresses, 1 through 4, through which the PC can be attached to the telephone or PassageWay Adapter.
2. Use the mouse or cursor keys to select the COM port that *physically* connects your PC to the telephone or PassageWay Adapter.
3. If you are finished making changes to this screen, click **Save**.
   - Your changes are saved.

To change the setting that determines whether audible tones are sent during dialing:

1. From the System Parameters screen, locate the checkbox that precedes the word "Tones."

   The setting you enter here determines whether PC Console will send audible tones during dialing sequences. Some applications and components require that tones be sent, or not sent. Note that if Auto Start is administered on your switch, you must specify that tones *are not* sent during dialing.
2. Check or uncheck this box, as appropriate:
   - If the checkbox is checked, tones will be sent.
   - If the checkbox is unchecked, tones will not be sent.
3. If you are finished making changes to this screen, click **Save**.
   - Your changes are saved.

To change the Companding standard currently in effect:

1. From the System Parameters screen, locate the radio-group buttons beneath the term **Companding**.
2. Indicate how the system should digitize your voice signals:
   - To specify the Mu-Law standards, click **Mu-Law**.
   - To specify the A-Law standards, click **A-Law**.
3. If you are finished making changes to this screen, click **Save**.
   - Your changes are saved.

To change the Second Party Display standard currently in effect:

1. From the System Parameters screen, locate the radio-group buttons beneath the term **Second Party Display**.

   This setting determines whether the intended receiver information or the dialing party information will be displayed in the Second Party Display area (within Call Handling) on the Console Operations screen during a multiple-party call.

2. Indicate what information should be displayed in the Second Party Display area.
   - To specify that information about the intended receiver be displayed, click **Coverage Point**.
   - To specify that information about the dialing party be displayed, click **Originator**.
3. If you are finished making changes to this screen, click **Save**.
   - Your changes are saved.

To upload the switch's Integrated Directory to the Upload File:

The switch's Integrated Directory feature enables the attendant to retrieve extension numbers from the system directory. The directory itself contains an alphabetical listing of up to 800 names and numbers of people within the system. PC Console is capable of uploading this to a special Upload File. The Upload File can then be used by the PhoneLine MasterDirectory software to create or refine directories for PC Console.

During the upload process, PC Console will examine each incoming record, using its last name and phone number fields for comparison against other records. If PC Console locates a new entry — one that does not exist in the Upload File — it adds that new entry to the Upload File.

1. Take the PC Console telephone off-hook.
2. Click the **Upload** button.
   - The Upload Screen is displayed.
3. Click the **Upload** button on the Upload Screen.
   - The upload process begins.

- PC Console compares each entry from the switch's Integrated Directory to those in the Upload File, then makes the following changes to the Upload File:
  - Identical entries are left intact.
  - New entries to the Integrated Directory are added.
  - Entries deleted from the Integrated Directory are left intact.

  It requires approximately 1 minute to scan and update 100 entries in the Upload File.

  When this process is complete, your screen displays a confirmation message that indicates how many records were uploaded.

NOTE:
If necessary, you can cancel the upload process by clicking the **Cancel** button.

4. When you are ready to exit the Upload Screen click the **Quit** button.

Creating Custom Languages

You can select the language that each user sees on the PC Console screens. You can also modify an existing language set to conform to a local dialect; or, if necessary, create an entirely new interface language. The terms that you define will appear on PC Console's operating screens.

It is important to note that each interface language you create must be complete before you can use it. If you define a new language, but do *not* translate all of the terms, that language will *not* be accessible for use in PC Console. Only complete languages can be used on the screens.

To create a new custom language:

1. Click the **Custom Language** folder.
   - The Custom Language tab is displayed. This screen requires the following information:
     - **Name of custom language** You must indicate what you want to call the new language.
     - **Help** You must indicate which of the already-created Help screens should automatically be associated with the new language. It is *not* possible to create a new language for the Help screens.

— **Initialize translations to** You must indicate the foundation, or "starting point" for the new interface language. You can either:

- Highlight an existing language to copy its terms, then modify those terms in the screens that follow; or
- Leave this entry blank, and enter brand new terms in the screens that follow.

Regardless of which starting point you use, the new terms will *only* affect your new custom language. They will not change the terms associated with any other language.

2. Click on the box immediately following **Name of custom language**. Type a name for the new language, then press **ENTER**.
3. Click on the down-arrow next to the **Help** box, then select the appropriate language for the Help screens.
4. If you want to use an existing language as the starting point for your new language, click on the down-arrow next to the **Initialize translations to** box, and select that existing language.
   - PC Console uses the terms from the existing language to populate the next two screens.
5. Click the left arrow button near the bottom of the screen.
   - The **Miscellaneous Terms** window is displayed. If you selected an existing language to use as a starting point, its terms are copied into this screen. Otherwise, the terms are initially blank.
6. Make the appropriate changes to each of the terms on this screen:
   - On the right side of the translation table, highlight the term whose translated value is to be assigned or changed.
     — The original term, and its translated value, appear in the lower part of the screen. The maximum number of characters that the translated value may contain is displayed beneath the word "Translation."
   - Use the standard Windows editing features to position your cursor and edit the translation, as appropriate.
   - To save the newly-translated term, press **ENTER**.
     — The translation table is updated to reflect your change.
7. When all appropriate changes have been successfully made to the **Miscellaneous Terms** window, click **Save**.

8. Click the left arrow button near the bottom of the screen.
   - The **Keyboard-Driven Terms** window is displayed. If you selected an existing language to use as a starting point, its terms are copied into this screen. Otherwise, the terms are initially blank.

     These are the short commands that the attendant uses to drive PC Console. Each command must be accessible using the mouse, or by typing on the keyboard. It is therefore necessary to also define **ALT-** key-sequences that the attendant can use to issue the commands from the keyboard. Using English as an example, **ALT-A** might indicate **Add**. **ALT-R** might indicate **Hundreds Groups**. When you define these key-sequences, you must define unique sequences within each screen. You cannot, for example, use an **ALT-R** sequence for two different entries that appear on the same screen.
9. Make the appropriate changes to each of the terms on this screen:
   - In the translation table, highlight the term whose translated value is to be assigned or changed.
     - The original term, its translated value, and its **ALT-** key sequence, appear in the lower part of the screen. The maximum number of characters that the translated value may contain is displayed beneath the word “Translation.”
   - Use the standard Windows editing features to position your cursor and edit the translation, as appropriate.
   - Position your cursor in the **ALT Key** translation box, in the lower part of the screen below the translated term.
     - To the right of the **ALT Key** translation box, the word “Used” precedes a list of any characters that could conceivably be used by this term, but that are already assigned to other terms in their **ALT-** sequences. Therefore, if you assign one of these already “Used” characters, you must change an existing **ALT-** sequence assignment, established elsewhere in the translation table.
   - If appropriate, type a new **ALT-** sequence character for this term.
     - If another term uses this **ALT-** sequence, that term is immediately displayed in the “Conflicts” box, on the right side of the screen.
   - To save the newly-translated term and its **ALT-** key sequence, press **ENTER**.
     - The translation table is updated to reflect your change.
     - If the **ALT-** sequence that you assigned conflicts with any other term, that term must be edited to change its **ALT-** sequence to remove the conflict before PC Console will allow you to save and use the finished custom language. Repeat Step 9 to edit the **ALT-** sequence for this conflicting term.

10. When you are finished making changes, click **Save**.

> **NOTE:**
> If necessary, you can use the left and right arrow buttons near the bottom of the screen to cycle through the windows and make any final changes to this interface language.

- If all required information has been provided, and no duplication exists for the **ALT-** key-sequences, the screen will display a status bar message indicating that the language has been saved, and can now be accessed within the PC Console system.
- If any information is missing from the defined terms, or if a duplicate exists within the **ALT-** key-sequence definitions, the screen will instead display “Custom language will be incomplete.” Before you can use the new language, you must return to Step 5 and finish defining its terms and **ALT-** key-sequence definitions.

To update an existing custom language:

1. Click the **Custom Language** folder.
   - The Custom Language tab is displayed. This screen requires the following information:
     - **Name of custom language** You must indicate which custom language you are changing.
     - **Help** You must indicate which of the already-created Help screens should automatically be associated with this language. It is *not* possible to create a new language for the Help screens.
2. Click on the down-arrow next to the **Name of custom language** box. Select the language you want to change.
3. If you want to change the language of the Help screens associated with this custom language, click on the down-arrow next to the **Help** box. Select the appropriate language for the Help screens.
4. Click the left arrow button near the bottom of the screen.
   - The **Miscellaneous Terms** window is displayed. The terms previously defined for this language are listed on the screen.

5. Make the appropriate changes to each of the terms on this screen:
   - On the right side of the translation table, highlight the term whose translated value is to be assigned or changed.
     - The original term, and its translated value, appear in the lower part of the screen. The maximum number of characters that the translated value may contain is displayed beneath the word “Translation.”
   - Use the standard Windows editing features to position your cursor and edit the translation, as appropriate.
   - To save the newly-translated term, press **ENTER**.
     - The translation table is updated to reflect your change.
6. When all appropriate changes have been successfully made to the **Miscellaneous Terms** window, click **Save**.
7. Click the left arrow button near the bottom of the screen.
   - The **Keyboard-Driven Terms** window is displayed. The terms previously defined for this language are listed on the screen.
8. Make the appropriate changes to each of the terms on this screen:
   - In the translation table, highlight the term whose translated value is to be assigned or changed.
     - The original term, its translated value, and its **ALT-** key sequence, appear in the lower part of the screen. The maximum number of characters that the translated value may contain is displayed beneath the word “Translation.”
   - Use the standard Windows editing features to position your cursor and edit the translation, as appropriate.
   - Position your cursor in the **ALT Key** translation box, in the lower part of the screen below the translated term.
     - To the right of the **ALT Key** translation box, the word “Used” precedes a list of any characters that could conceivably be used by this term, but that are already assigned to other terms in their **ALT-** sequences. Therefore, if you assign one of these already “Used” characters, you must change an existing **ALT-** sequence assignment, established elsewhere in the translation table.
   - If appropriate, type a new **ALT-** sequence character for this term.
     - If another term uses this **ALT-** sequence, that term is immediately displayed in the “Conflicts” box, on the right side of the screen.

- To save the newly-translated term and its **ALT-** key sequence, press **ENTER**.
  - The translation table is updated to reflect your change.
  - If the **ALT-** sequence that you assigned conflicts with any other term, that term must be edited to change its **ALT-** sequence to remove the conflict before PC Console will allow you to save and use the finished custom language. Repeat Step 8 to edit the **ALT-** sequence for this conflicting term.

9. When you are finished making changes, click **Save**.

NOTE:
If necessary, you can use the left and right arrow buttons near the bottom of the screen to cycle through the windows and make any final changes to this interface language.

- If all required information has been provided, and no duplication exists for the **ALT-** key-sequences, the screen will display a status bar message indicating that the language has been saved, and can now be accessed within the PC Console system.
- If any information is missing from the defined terms, or if duplicates exist within the **ALT-** key-sequence definitions, the screen will instead display “Custom language will be incomplete.” Before you can use the new language, you must return to Step 4 and finish defining its terms and **ALT-** key-sequence definitions.

To delete a custom language:

1. Click the **Custom Language** folder.
   - The Custom Language tab is displayed.
2. Click on the down-arrow next to the **Name of custom language** box. Select the custom language you want to delete.
3. Click the **Delete** button.
   - A message box asks for confirmation that you want to delete this language.
4. If you want to delete the language, click **Yes**.
   - The language is deleted.

Exiting the Console Administration Area

To exit the Console Administration area:

1. Select **Administration-Exit** from the Menu Bar.
   - If any changes have not been saved, you have the opportunity to save or discard those changes, or to cancel the Exit procedure.
   - The Console Administration screen is closed.

Directory Administration

4

Overview

The term “Directory Administration” refers to a collection of procedures. These are the procedures that you, as System Administrator, will use to define, and later identify, the database information required by PC Console to communicate with the switch.

The tool that you will use to perform Directory Administration is called PhoneLine MasterDirectory. This standalone software application allows you to create and manage information in multiple directories. PC Console uses these completed directories to access information about the people in your environment.

Using the PhoneLine MasterDirectory Software

You can create and use up to four PC directories in PC Console. Each directory is actually a database created and maintained by the PhoneLine MasterDirectory software.

The PhoneLine MasterDirectory software is a feature-rich application. It provides capabilities that give you a great deal of control when developing your database structures. You can, for example, tie together information from multiple source files. One file might have name and address information; another service records; and yet another emergency contact information. Using the PhoneLine MasterDirectory software, you can create a single database that ties all of this information together, for a complete profile of each person in your environment.

The PhoneLine MasterDirectory software also enables you to automate your update procedures. You can pre-schedule update intervals, and determine which routines will be performed each time. This minimizes your daily involvement in keeping critical database information synchronized.

Information from the switch's Integrated Directory can also be included in the directories that you build using PhoneLine MasterDirectory. Chapter 3, "Console Administration," includes the procedure that you will use to upload information from the switch's Integrated Directory. This information is funneled into a special Upload File. Once the Upload File is accessible to PhoneLine MasterDirectory, your ability to cross-reference and update comprehensive database information is even further enhanced.

It is beyond the scope of this manual to address all of the capabilities and procedures for PhoneLine MasterDirectory. When you are ready to build your directories for PC Console, please refer to the PhoneLine MasterDirectory User's Guide for step-by-step instructions.

Helpful Hints When Building Your Directories

You can have up to four directories in PC Console. The first directory is called the *primary* PC Console directory. It is different from the remaining directories in the following ways:

- The primary PC Console directory always occupies the first position in the list of PC Directories on the Console Operations screen.
- The primary PC Console directory is used to identify the called- or calling-parties, and to display that information in the Second Party Display area at the bottom of the Console Operations screen.
- The primary PC Console directory is used to identify the user name associated with each Busy Lamp Field on the Console Operations screen.
- The primary PC Console directory is pre-administered with 7 fields.
- The primary PC Console directory has already been indexed.

When setting up your *primary* PC Console directory, be certain to include all information that will be needed in both the Second Party Display and the Busy Lamp Fields. Also be certain to leave it as Directory 1 in the System Parameters screen within Console Administration. (See Chapter 3, "Console Administration" for more details.)

When PC Console is first installed, it includes an empty database file named dir1.md. This database file contains the following fields:

- Last Name
- First Name
- Phone
- Notes
- Field 5
- Field 6
- Field 7

You can choose to use, or not use, this predefined database structure as the foundation for your PC Console directories. You can likewise choose to use, or not use, the predefined fields. However, we strongly recommend that all directories used by PC Console include at least the first three fields to allow the greatest possible PC Console functionality.

Once you have defined your basic database structure in MasterDirectory, you will need to perform some indexing. This only needs to be performed once, unless your database structure should change. You will also need to repeat this procedure before updating your database using the Upload feature. To initiate this process, select **Settings-Indexes** from the MasterDirectory menu bar.

- **Index your fields** — Although it is not required, we recommend that you index *all* of your fields, with the exception of any Notes fields.

You will also need to specify *how* the various fields are to be used. Select **Settings-MDAccess** from the MasterDirectory menu bar. Be certain to:

- **Specify which Notes field is the default** — This is the Notes field used to populate the Second Party Display and PC Console directory window.
- **Specify which field can be dialed** — This is the phone number that PC Console dials when the user clicks the **Call** button or presses **ENTER**.
- **Specify which fields should be displayed** — These are the fields that will be displayed in the upper section of the PC Console directory window.
- **Specify which fields should provide detail** — These are the fields that will be displayed in the lower part of the PC Console directory window when the user highlights a record.

Again, please refer to the PhoneLine MasterDirectory User's Guide for step-by-step instructions.

Importing an Upload File – A Quick Overview

The PhoneLine MasterDirectory User's Guide contains the step-by-step procedures you will follow to import an Upload file. For your convenience, however, a synopsis of those instructions is provided here.

To import an Upload File:

1. Access the console administration area and perform the procedure to upload the switch's Integrated Directory to the Upload File. (Refer to Chapter 3, "Console Administration" for the step-by-step procedures.)
2. Exit the console administration area.
3. Launch MasterDirectory.
4. Select **File-Open** from the Menu Bar.
5. Locate and click on the file named dir1.md. Its default location is pccon2\direc\.
6. Click **OK** or press **ENTER**.
7. Select **Import-Map-Open** from the Menu Bar.
8. Locate and click on the file named upload.imp. Its default location is pccon2\direc\.
9. Click **OK** or press **ENTER**.
10. To identify the source file, locate and click on the file named upload.dbf.
11. Click **Next**.
12. If there are any errors in the displayed import map, correct those errors now.
13. Click **Next**.
14. To begin the import process, click **Import**.
    - The import process begins. When it is complete, a confirmation box is displayed.
15. Click **OK**.
16. Click **Close**.
17. Exit MasterDirectory.

Console Operations

5

Operations Overview

The procedural information provided in this chapter is divided into the following three categories of Console Operations:

- **Accessing and Exiting PC Console Operations** — These are the procedures you will use to access, login, and exit the PC Console Operations area.
- **Call Handling** — These are the procedures you will use most frequently in PC Console Operations. This section provides instructions on answering, placing, holding, splitting, transferring, conferencing, and releasing calls; and using the note-taking capability of PC Console.
- **Searching and Updating a Directory** — These are the procedures you will use to locate a person, based on their entry in one of the PC Console directories. You can search for the person based on any field, including first name, last name, phone number, and the notes entry. You can also call them directly by clicking on the **Call** button. This section also contains the procedures you will need to maintain the directories — adding, changing, and deleting individual entries that are stored on PC Console.

Accessing and Exiting PC Console Operations

To launch the PC Console Operations application software:

1. Double-click on the **Console Operation** icon to launch the application.
   - The PC Console splash screen is displayed, followed by the PC Console Login window.
2. Verify that the **Position Busy** feature button is displayed in gray. If it is not, click that button so that the switch forwards “0”perator calls to PC Console.

To login as a new attendant:

Your login profile contains information about you, including your preferences for language, Help Tips, and Auto Transfer. To make those preferences available to the system, however, you must either launch PC Console using your login name and password, or identify yourself as a new attendant using the following login procedure.

1. Select **Attendant-Login** from the Menu Bar.
   - The Attendant Login window is displayed.
2. Enter your login name and password.
3. Click **OK** or press **ENTER**.

To change your profile information temporarily:

Your administrator has selected the language that you see on the PC Console screens, and has established three default settings that you can override on a temporary basis. Specifically, you can change the settings that determine whether Help Tips are displayed, whether Auto Transfer is enabled, and whether audible tones are sent during dialing. The changes you make only affect the current session; they do *not* become a permanent part of your profile.

- **Help Tips** — You use the same procedure to toggle the Help Tips feature on or off. Simply select **Attendant-Help Tips Visible** from the Menu Bar. If the feature is turned on, a checkmark precedes its name on the Menu Bar.
- **Tones** — This checkbox, labeled **Tones**, appears within the Call Handling area. Some applications and components (like voice mail) require that tones be sent, or not sent. However, note that if Auto Start is administered on your switch, you must specify that tones *are not* sent during normal dialing. Therefore, you would leave the box unchecked.

- **Auto Transfer** — This checkbox, labeled **Auto Transfer**, also appears within the Call Handling area. Check the box if you want calls to be transferred automatically, without announcement. This reduces the number of steps required to transfer a call.

To exit the PC Console Operations software:

1. Select **Attendant-Exit** from the Menu Bar.
   - Position Busy is enabled.
2. If any calls are in progress, click **Yes** to indicate that you want to release those calls.
   - Any calls in progress are dropped or disconnected.
   - The PC Console telephone is disabled.

Call Handling

Call Handling functions are those functions you will perform most frequently in PC Console. In general, these functions involve:

- Answering a call
- Conferencing multiple parties together on a call
- Holding a call
- Placing a call
- Releasing a call
- Splitting a call
- Transferring (extending) a call
- Typing notes about a call

Answering a Call

When an incoming call arrives, your screen will display information about that call. The information that you actually see depends upon the configuration of your system, and PC Console's previous call handling status.

When an incoming call arrives, the following occurs at the PC Console workstation:

- You hear 1-burst repetitive ringing.

NOTE:

If your switch is administered for Automatic Answer, you will *not* hear a ring. Instead, PC Console will establish the connection for you automatically.

- An Answer icon is displayed on the call bar associated with the incoming call.
- The background of the call bar changes to white.
- If the call bar associated with the incoming call is highlighted, the call bar and the Second Party Display (at the bottom of the screen) indicate the called- or calling-party identification, if that information is available.
- The **Position Available** indicator is turned off.

A special type of incoming call is the emergency call. When an emergency call arrives, the following also occurs at the PC Console workstation:

- The **Emergency** feature button (if one is administered) is displayed in pink.
- An Emergency tone sounds.
- The call bar identifies the call with the abbreviation EMRG and shows the following information:
  - The calling party identification
  - The number of emergency calls remaining in the queue
- A typical emergency call has this display format:

a = TOM ROBERTS EXT 3041 in EMRG Q

The procedure for answering an emergency call is the same as the procedure to answer any other call. However, you should respond immediately to an emergency call, placing other calls on hold if necessary.

To answer an incoming call:

1. Click the Answer icon or highlight the call bar and press **F6**.
   - Ringing stops.
   - You are connected to the calling party.

- The Transfer , Hold , Release and Conference icons are displayed on the call bar that is associated with this call.
- The **Position Available** indicator is turned off.

To answer a second call:

1. Click the Hold icon or highlight the call bar and press **F7** to place the current call on hold.
   - A Retrieve icon is displayed on that call bar.
   - The incoming call is automatically displayed on the next available call bar.
2. Click the Answer icon for the incoming call, or highlight its call bar and press **F6**.
   - Ringing stops.
   - You are connected to the second calling party.
   - The Transfer , Hold , Release and Conference icons are displayed on the call bar that is associated with this call.

Conferencing Multiple Parties Together on a Call

You can conference up to five parties, plus yourself, on a single call. The call to which you add conferees can be either incoming or outgoing; however all other calls added to the conference must be outgoing.

To set up a conference call using only the call handling icons:

1. Answer or place the call which is to be conferenced with the other parties.
2. Click the Conference icon or press **F9**.
   - The Call , Hold , Release , and Forced Release icons are displayed on the call bar.

3. Click the Call icon or press **F6**.
   - You hear dial tone.
   - The **Split** feature button is displayed in white.
   - A Cancel icon is displayed on the call bar
4. **If you are dialing a telephone number,** dial the outbound number. You can use a Trunk Group button, the search and dial capabilities of PC Directory, your keyboard, or the telephone keypad to access the outgoing trunk and dial the call. You can enter numbers 0 through 9, comma, asterisk (*), and pound sign (#).

   If you are dialing an extension number, you can use the search and dial capabilities of PC Directory, use your keyboard or the telephone keypad to dial the extension number; or click the Hundreds Group button, then the Busy Lamp Field associated with that extension.
   - The number is dialed.
   - The Add and Cancel icons are displayed on the call bar.
5. **If the called party has answered and you are ready to add them to the conference,** click the Add icon or press **F6** to add this person to the conference call.
   - The call bar indicates the number of people on this call.
   - The Call , Hold , Release , and Forced Release icons are displayed on the call bar.

   If the called party does not answer or does *not* wish to join the conference call, click the Cancel icon or press **F7**.
   - The Call , Hold , Release , and Forced Release icons are displayed on the call bar.
6. If you want to add another person to the call, repeat this procedure from Step 3.

To drop yourself from a conference call:

You can drop yourself from a conference call without affecting the connected parties. The conference call itself continues, but is removed from your PC Console display.

1. Click the Release icon , or highlight the call bar associated with the conference call and press **F8**.
   - The call is removed from your display, but continues undisturbed for the remaining parties.

To end a conference call:

When you end a conference call, the call is terminated for all connected parties.

1. Click the Forced Release icon , or highlight the call bar associated with the conference call and press **F9**.
2. Click **Yes** to confirm that you want to end the conference.
   - The call is removed from your display and terminated for *all* connected parties.

Holding a Call

You can put any call on hold at the PC Console workstation; including single-party and multi-party calls. It is possible to have a held call on each of the six call bars. You should hold a call if the party (or parties) may need assistance during the call, or if you expect to reenter the call with information.

If you are holding a multi-party call, the Attendant Lockout feature can be used to prevent you from directly reentering the call. One of the parties on the call must call you for assistance, via the Attendant Recall feature.

NOTE:
If a single-party call is held for longer than the switch-based timed reminder interval, its call bar will turn red and a timed reminder tone will sound. Retrieve the call in the usual way, but you must handle this call before accepting any new calls.

To hold the current call:

1. Click the Hold icon or highlight the call bar and press **F7**.
   - The call is placed on hold.
   - A Retrieve icon is displayed on the call bar.

- The hold counter and timer are displayed on the left side of the call bar.
- The background of the call bar changes to pink.

To retrieve (reenter) a held call:

1. Click the Retrieve icon , or highlight the call bar associated with the call and press **F7**.
   - The held call is retrieved.
   - The Transfer , Hold , Release and Conference icons are redisplayed on the call bar that is associated with this call.

Placing a Call

You can place calls to extension numbers inside your system, as well as calls to outside numbers through trunks. The procedures required to place these calls can be slightly different. These procedures are outlined below.

To place a call to an inside extension:

1. Click the Hundreds Group button that is associated with the extension you want to call, then click the Busy Lamp Field for that extension; **or**

   Click a Call icon , then dial the extension number using your keyboard or telephone keypad. You can enter any of the following: numbers 0 through 9, comma, asterisk (*), and pound sign (#); **or**

   Use the search and dial capabilities of PC Directory.

   NOTE:
   If the extension is displayed in dark blue, this indicates that it is in use. You can still place the call, but it may Call Wait or go to a covering party.

- The background of the next available call bar changes to white.
- The call bar assigns a letter identification (such as c=) to the call.
- The extension is dialed.

- The Transfer , Hold , Release and Conference icons are displayed on the call bar that is associated with this call.
- The call bar and the Second Party Display in the lower part of the screen indicate the called- or calling-party identification (if that information is available).
- The **Position Available** indicator is turned off.

2. Listen for the call progress tones.
   - — If ringback tone is heard, this indicates the called extension is idle and ringing. When the call is answered, talk to the called party.
   - — If busy tone is heard, this indicates the extension is busy. Click the Release icon or press **F8** to release from the call, then try again later.
   - — If Call Waiting ringback tone is heard, this indicates the extension is busy and the call is Call Waiting. Either wait to talk to the called party, or click the Release icon or press **F8** to release from the call, then try again later.
   - — If intercept tone is heard, this indicates an invalid extension. Click the Release icon or press **F8** to release from the call, then try again.

To place a call to an outside number:

An outside call requires that you access an outgoing trunk, then dial the number. You can access the trunk by dialing an access code for that trunk group — such as a Private Network, Automatic Alternate Routing (AAR), or Automatic Route Selection (ARS); or by clicking the Trunk Group button for the desired trunk.

1. Click a Call icon , or highlight an empty call bar and press **F6**, then use your keyboard or telephone keypad to dial the complete number, including any required access codes. You can enter numbers 0 through 9, comma, asterisk (*), and pound sign (#); **or**

   Click the Trunk Group button that is associated with the desired trunk, then follow the usual dialing sequence to dial the outbound number; **or**

   Use the search and dial capabilities of PC Directory.

   - The background of the call bar changes to white.
   - The call bar assigns a letter identification (such as c=) to the call.

- The **Position Available** indicator is turned off.
- The number is dialed.
- The Transfer , Hold , Release and Conference icons are displayed on the call bar that is associated with this call.
- You can now talk to the person you were calling.

To place a second call when Auto Hold is *not* administered on your switch:

1. To put the first call on hold, click its Hold icon or highlight the call bar and press **F7**.
   - The first call is placed on hold.
   - A Retrieve icon is displayed on the call bar.
   - The hold counter and timer are displayed on the left side of the call bar.
   - The background of the call bar changes to pink.
2. On the call bar you will use to make the outgoing call, click the Call icon , or highlight an empty call bar and press **F6**.
   - A Release icon is displayed on the call bar.
   - You hear dial tone.
   - The background of the call bar changes to white.
   - The call bar assigns a letter identification (such as c=) to the call.
3. **If you are dialing a telephone number,** dial the outbound number. You can use a Trunk Group button, the search and dial capabilities of PC Directory, your keyboard, or the telephone keypad to access the outgoing trunk and dial the call. You can enter numbers 0 through 9, comma, asterisk (*), and pound sign (#).

   If you are dialing an extension number, you can use the search and dial capabilities of PC Directory, use your keyboard or the telephone keypad to dial the extension number; or click the Hundreds Group button, then the Busy Lamp Field associated with that extension.
   - The call bar displays the called party's telephone number.
   - The number is dialed.

- The Transfer , Hold , Release and Conference icons are displayed on the call bar that is associated with this call.
- You can now talk to the person you were calling.

To place a second call when Auto Hold *is* administered on your switch:

1. On the call bar you will use to make the outgoing call, click a Call icon , or highlight an empty call bar and press **F6**.
   - The first call is automatically placed on hold.
     - A Retrieve icon is displayed on the call bar.
     - The hold counter and timer are displayed on the left side of the call bar.
     - The background of the call bar changes to pink.
   - The second call bar becomes current.
     - A Release icon is displayed on the call bar.
     - You hear dial tone.
     - The background of the call bar changes to white.
     - The call bar assigns a letter identification (such as c=) to the call.
2. **If you are dialing a telephone number,** dial the outbound number. You can use a Trunk Group button, the search and dial capabilities of PC Directory, your keyboard, or the telephone keypad to access the outgoing trunk and dial the call. You can enter numbers 0 through 9, comma, asterisk (*), and pound sign (#).

   If you are dialing an extension number, you can use the search and dial capabilities of PC Directory, use your keyboard or the telephone keypad to dial the extension number; or click the Hundreds Group button, then the Busy Lamp Field associated with that extension.
   - The call bar displays the called party's telephone number.
   - The number is dialed.
   - The Transfer , Hold , Release and Conference icons are displayed on the call bar that is associated with this call.
   - You can now talk to the person you were calling.

To abandon a call attempt:

1. Click the Release icon or press **F8**.
   - The call is dropped.

Releasing a Call

Releasing a call is sometimes referred to as “dropping a call,” or more simply “hanging up.” You can release one call at a time.

To release a call:

1. Click the Release icon , or highlight the call bar associated with the call and press **F8**.
   - The call is terminated.
   - PC Console disconnects from the called party, the calling party, or both parties if they are connected together.
   - If no other calls are coming in to the console and the **Position Busy** feature button is not white, the **Position Available** indicator is displayed in red. PC Console is ready to answer or place another call.

Splitting a Call

The Attendant Auto-Manual Splitting feature lets you temporarily disconnect from a caller, place a call to another party, and then connect the two parties together. Splitting is a procedure that must always be performed to extend an incoming call to an outside number. Splitting allows you to take the following steps:

- Either talk to the second party to announce the waiting call or drop out of the call before the second party answers.
- Connect the first and second parties together.
- Join the first and second parties in a 3-way connection from which you can later drop out.
- Return to the first party if the second party does not answer or declines to enter the call.

This feature is activated automatically when you perform any one of the following actions after answering an incoming call:

- Click the Transfer icon or press **F6** to transfer the call.
- Click a Hundreds Group button and Busy Lamp Field.

- Click a Trunk Group button.
- Dial a number using the dial capabilities of PC Directory.

While the caller is split from the console, the **Split** feature button is displayed in white.

The split condition is canceled and the **Split** feature button is displayed in gray when you do one of the following:

- Click the Transfer icon or press **F6** to finish connecting the first party to the second party, and to disconnect the console.
- Click the **Split** feature button to establish a 3-way connection with you, the first party, and the second party. If the second party has dropped off, PC Console automatically cancels the split and returns you to the other caller.
- Click the Cancel icon or press **F7** to cancel the outgoing call attempt and reconnect you to the first party.
- Highlight the call bar associated with the call and click the **Forced Release** feature button to terminate the call for all connected parties.

The steps for activating and deactivating the split condition are integrated into the various procedures within this user's manual.

Transferring (Extending) a Call

You can transfer calls to an inside extension, or to an outside telephone number through a trunk.

Transferring a call consists of answering an incoming call, splitting, placing another call, and then connecting the two calls together.

You will transfer calls when one of the following occurs:

- A party on an incoming call asks to be connected to an extension within the system. The incoming call will normally be a trunk call from outside the system, but it can also be from an inside extension.
- An inside extension user in your own system asks to be connected to an outside number through a trunk.
- A party on an incoming trunk call asks to be connected to an outside number on another trunk.

To transfer an incoming call to an inside extension:

1. Click the Transfer icon , or highlight the call bar associated with the call and press **F6**.
   - The call is automatically placed on hold.
   - A Cancel icon is displayed on the call bar.
   - The calling party is separated from the connection.
   - You hear dial tone.
   - The **Split** feature button is displayed in white.
2. Dial the extension to which you want to transfer the call. You can either:

   Use the search and dial capabilities of PC Directory, or

   Use your keyboard or telephone keypad to dial the extension, or

   Click the Hundreds Group button, then the Busy Lamp Field that is associated with that extension.
   - If Auto Transfer is enabled, the call is transferred automatically. This procedure is complete.
   - If Auto Transfer is *not* enabled, a Transfer icon is added to the call bar. Continue to the next step.
3. **If you want to set up a 3-way connection that includes the console,** click the **Split** feature button before or after the called party has answered. The **Split** feature button changes to gray and you are connected to both the caller and the calling party. If you want to drop out of the 3-way connection, click the Transfer icon or press **F6**. This procedure is complete.

   If you want to transfer the call but *not* announce it, click the Transfer icon again or press **F6** before the called party answers. The call is transferred, the **Split** feature button changes to gray, and the console is released from the call. This procedure is complete

If you want to transfer the call *after* announcing it, wait until the called party answers, then speak to the person to notify them of an incoming call.

— **If the called party accepts the call,** click the Transfer icon again, or press **F6** to complete the transfer. The two parties are connected, the **Split** feature button changes to gray, and the console is released from the call. This procedure is complete.

— **If the called party declines the call,** click the Cancel icon or press **F7** to reconnect to the caller. Tell the caller that the called party is unavailable, take a message if appropriate, then click the Release icon or press **F8** to terminate the call. This procedure is complete.

— **If the line is busy or there is no answer,** click the Cancel icon or press **F7**. The call progress tones stop, and you are reconnected to the caller. Tell the caller that the called party is unavailable, take a message if appropriate, then click the Release icon again or press **F8** to terminate the call. This procedure is complete.

To transfer a call from an inside extension to an outside number:

1. Before attempting the transfer, obtain the following information:
   - Verify that the outgoing call is allowed in your environment.
   - Find out whether the caller wants to dial the outside number after you access a trunk, or instead wants for *you* to dial the call.
2. Tell the caller that you are going to break the connection temporarily while you start the outbound call.

   If you want to set up a 3-way connection that includes the console, skip to Step 5.
3. Click the Transfer icon or press **F6**.
   - The caller is automatically placed on hold, and a Cancel icon is displayed on the associated call bar.
   - The calling party is separated from the connection.
   - You hear dial tone.
   - The **Split** feature button is displayed in white.

- The background of the call bar changes to white.
- The call bar assigns a letter identification (such as c=) to the new call.

4. Initiate the outbound call by clicking the Trunk Group button that is associated with the desired trunk, or by dialing the access code for the desired trunk.

   - The Transfer and Cancel icons are displayed on the call bar that is associated with this call.

5. Click the Transfer icon or press **F6**.

   - This procedure is complete.

6. **If you want to set up a 3-way connection that includes the console,** click the **Split** feature button before or after the called party has answered. The **Split** feature button changes to gray and you are connected to both the caller and the calling party. If you want to drop out of the 3-way connection, click the Transfer icon or press **F6**. This procedure is complete.

7. **If you want to transfer the call but *not* announce it,** click the Transfer icon again or press **F6** before the called party answers. The call is transferred, the **Split** feature button changes to gray, and the console is released from the call. This procedure is complete.

   NOTE:

   You can perform this step only if Auto Transfer is *not* enabled. If Auto Transfer *is* enabled, the call is transferred automatically.

8. **If you want to transfer the call *after* announcing it,** wait until the called party answers, then speak to the person to notify them of an incoming call.

   NOTE:

   You can perform this step only if Auto Transfer is *not* enabled. If Auto Transfer *is* enabled, the call is transferred automatically.

— **If the called party accepts the call,** click the Transfer icon again, or press **F6** to complete the transfer. The two parties are connected, the **Split** feature button changes to gray, and the console is released from the call. This procedure is complete.

— **If the called party declines the call,** click the Cancel icon or press **F7**. The **Split** feature button changes to gray and you are reconnected to the caller. Tell the caller that the called party is unavailable, take a message if appropriate, then click the Release icon or press **F8** to terminate the call. This procedure is complete.

— **If the line is busy or there is no answer,** click the Cancel icon or press **F7**. The call progress tones stop, the **Split** feature button is displayed in gray, and you are reconnected to the caller. Tell the caller that the called party is unavailable, take a message if appropriate, then click the Release icon again or press **F8** to terminate the call. This procedure is complete.

To transfer an incoming trunk call to an outside number:

NOTE:

You can perform this procedure only if Trunk-to-Trunk Transfer is enabled on your switch. For additional information, refer to “Trunk-to-Trunk Transfer” in Chapter 6, “Switch Features.”

1. Tell the caller that you are going to break the connection temporarily while you start the outbound call.
2. Initiate the outbound call by clicking the Trunk Group button that is associated with the desired trunk, or by dialing the access code for the desired trunk.
   - The caller is automatically placed on hold, and a Cancel icon is displayed on the associated call bar.
   - The calling party is separated from the connection.
   - You hear dial tone.
   - The **Split** feature button is displayed in white.
   - The background of the next available call bar changes to white.

- The call bar assigns a letter identification (such as c=) to the new call.
- The Transfer , Hold , Release and Conference icons are displayed on the call bar that is associated with this new call.

If reorder tone is heard, this indicates that a trunk is not available. Click the **Split** feature button to reconnect to the caller, then ask the caller to try again later. This procedure is complete.

3. Use your keyboard or telephone keypad to dial the complete number. You can enter numbers 0 through 9, comma, asterisk (*), and pound sign (#).
   - The call bar displays the called party's telephone number.
   - The number is dialed.
4. **If you want to set up a 3-way connection that includes the console,** click the **Split** feature button before or after the called party has answered. The **Split** feature button changes to gray and you are connected to both the caller and the calling party. If you want to drop out of the 3-way connection, click the Transfer icon or press **F6**. This procedure is complete.

   If you want to transfer the call but *not* announce it, click the Transfer icon or press **F6** before the called party answers. The call is transferred, the **Split** feature button changes to gray, and the console is released from the call. This procedure is complete

   If you want to transfer the call *after* announcing it, wait until the called party answers, then speak to the person to notify them of an incoming call.

   — **If the called party accepts the call,** click the Transfer icon or press **F6** to complete the transfer. The two parties are connected, the **Split** feature button changes to gray, and the console is released from the call. This procedure is complete.

   — **If the called party declines the call,** click the Cancel icon or press **F7** to reconnect to the caller. Tell the caller that the called party is unavailable, take a message if appropriate, then click the Release icon or press **F8** to terminate the call. This procedure is complete.

— **If the line is busy or there is no answer,** click the Cancel icon or press **F7**. The call progress tones stop, and you are reconnected to the caller. Tell the caller that the called party is unavailable, take a message if appropriate, then click the Release icon again or press **F8** to terminate the call. This procedure is complete.

Typing Notes About a Call

You can enter two types of notes while active on call.

- **Temporary, call-associated notes**
  These are the notes you type directly into the small notepad area of the call bar. You will find this feature helpful when you need to move to a different call, but do not want to forget some detail about the current call.
- **Notes that you associate with an entry in the PC Console Directory**
  These are the notes that you can associate with a person listed in the PC Console directory, assuming that your administrator has included a "Notes" field for this purpose. You will typically use this field to remind yourself (or others) of information that may be relevant when taking calls for that person. Some examples are information about vacation, travel status, or the hours during which the person can be reached.

To type a temporary note in the notepad area of the call bar:

1. Click on the notepad area of the call bar associated with the call for which you wish to create a note. (The notepad area is slightly to the left of the call handling icons on the call bar.)
2. Use the keyboard to type the appropriate note.
   - The note will remain on the call bar until you overwrite it, delete it, or release the call.

To edit any field (including notes) for the entry that appears in the Second Party Display:

1. While the directory entry is visible in the Second Party Display (at the bottom of the screen), click the **More** button.
   - All information available for the entry is displayed in an Edit Window.
2. Position your cursor in the field you want to edit.
3. Use the keyboard to make the appropriate changes.
4. Click the **Save** button.
   - The information is saved, and will remain with the directory entry until it is overwritten or deleted, either by you or by another console operator.

Searching and Updating a Directory

Your PC Console environment may have up to four PC Console directories. Each PC Console directory is actually a database that maintains information about the people in your environment. It may contain each person's first name, last name, phone number, and other pertinent pieces of information; as well as any notes that you have saved with the person's record.

You can use this information to locate any person in your environment — searching for them by any field, including first name, last name, phone number, and the notes entry. You can also call them directly by pressing **ENTER** or by clicking the **Call** button. This section contains the procedures you will need to perform each of these functions.

The functions performed by the first, or *primary* PC Console directory are different from the functions performed by the remaining three directories in several important ways:

- The primary PC Console directory always occupies the first position in your list of PC Directories.
- The primary PC Console directory is used to identify the called- or calling-parties, and to display that information in the Second Party Display area at the bottom of your screen.
- The primary PC Console directory is used to identify the user name associated with each Busy Lamp Field.

Accessing the PC Console Directory Functions

To access the PC Console directory functions:

1. Click the icon associated with the desired directory.

   Or

   Press and hold the **ALT** key, then press the number associated with the desired directory.

   Or

   Press **F4** to move to the PC Directory area, use the **TAB** key to select the desired directory, then press **ENTER**.

Searching for Information in a PC Console Directory

You can search for a person in a PC Console directory by specifying a search field, then typing the information you wish to match.

To search for an entry in a PC Console directory:

1. In the box labeled **Search By**, locate and click on the field name that corresponds to the type of search you want to perform. You can select from any field in the directory that your administrator has enabled as a search criteria.
2. In the box labeled **Search For**, type the string of text that you want PC Console to locate. PC Console jumps to the first record that matches the information you have entered thus far.
3. If more than one entry is displayed as a possible match, click on the desired entry.

   The screen displays information from the record you have selected. It may include the person's last name, first name, phone number, recorded notes, and any other fields included in the directory.

Placing a Call from a PC Console Directory

To place a call from a PC Console Directory:

1. Locate the person you want to call. (Refer, if necessary, to the procedure entitled "To search for an entry in a PC Console directory").
2. Press **ENTER**.
   - PC Console dials the field in this record that is administered as a "dialable" number.

   Or

   Click the **Call** button.
   - PC Console dials the field in this record that is administered as a "dialable" number.

   Or

   Click the dialpad icon associated with any field in the Record Display.
   - PC Console dials the entry within that field, including numbers 0 through 9, asterisk (*), pound sign (#), and comma (,). A comma inserts a 2-second pause in the dialing string.

Changing the Information in a PC Console Directory

Refer to the following procedures to maintain the information in a PC Console directory.

You can add, change, and delete individual entries in any PC Console directory. This includes any notes that are saved with the person's entry in a PC Console directory. You will typically use any note fields to remind yourself (or others) of information that may be relevant when taking calls for that person. Some examples are information about vacation, travel status, or the hours during which the person can be reached.

To add an entry to the PC Console directory:

1. From the PC Console directory window, click the **Add** button.
   - The Record Display screen is displayed and the first field is active.
2. Type the information required for this field; then press **TAB** or **ENTER**.
   - The cursor moves to the next field.
3. Repeat Step 2 until all of the necessary information has been entered for this record.
4. To save this new entry, click the **Save** button.

To edit an entry in the PC Console directory:

1. Locate the person whose entry you want to edit. (Refer, if necessary, to the procedure entitled "To search for an entry in a PC Console directory.")
2. Click the **Edit** button.
   - The Record Display screen is displayed.
3. Edit the appropriate information, using the mouse or **TAB** key to move between the various fields. You can use the standard Windows editing features to add, change, or delete information in any displayed field.
4. To save this modified entry, click the **Save** button.

To delete an entry in the PC Console directory:

1. Locate the person whose entry you want to delete. (Refer, if necessary, to the procedure entitled “To search for an entry in a PC Console directory.”)
2. Click the **Delete** button.
   - A message box asks for confirmation of this deletion.
3. Click **Yes**.
   - This entry is deleted from the PC Console directory.

Exiting the PC Console Directory Functions

To exit the PC Console directory functions:

1. Click its **Quit** button or press **F2**.
   - The PC Console directory window is closed.

Switch Features

6

This chapter contains brief descriptions, and step-by-step procedures for the switch features that are most commonly used by the PC Console operator. These features are presented alphabetically.

Abbreviated Dialing

Abbreviated Dialing (AD) provides a mechanism to store numbers that any attendant can access for placing calls and activating features. This feature reduces the number of keystrokes required for dialing — making calling more error-free.

The System Manager can assign **AD** feature buttons to some positions to allow one-button dialing of selected numbers, and other **AD** feature buttons to allow access to AD lists. These multi-digit numbers can be called by clicking the associated **AD** feature button, then dialing an entry number from that list.

Storing frequently-used feature access codes on **AD** feature buttons is especially convenient for the attendant. The **AD** feature buttons can also be used for storing long-distance and international numbers.

To activate a feature or place a call using the Abbreviated Dialing feature:

1. Click the **AD** feature button assigned to the desired list code or telephone number.

   If the **AD** feature button is linked to a list code, use the keypad or keyboard to type the desired entry number on its associated list.

2. Continue the call in the normal way.

Attendant Call Waiting

This feature allows a call extended from the console to a busy single-line telephone inside the system to wait at the called telephone. Call Waiting is automatic. After the extension is dialed, the attendant hears Call Waiting ringback tone, and the busy telephone user hears a 2-burst tone.

You must tell the calling party that the extension is busy and the call is waiting, before you click the Release icon or press **F8**. It is important to complete this step before the call returns.

When you put a call in waiting and click the Release icon or press **F8**, the call is off the console, and other calls can be handled.

If the call is not answered before a preset time expires, the call returns to the console. The timed-reminder tone is heard, and the call identification and call purpose are displayed on the call bar. Answer the returning call the same way that you would answer any incoming call. If the call progress condition is: Attendant Intrusion not allowed and Attendant Call Waiting not allowed, busy tone will be returned to the attendant. (Refer to “Timed Reminder,” in the “Timing” section of this chapter for more information on handling a returned call.)

To tell the calling party that the extended call is waiting:

1. Click the **Split** feature button.
   - The console is reconnected to the calling party.
   - The **Split** feature button is displayed in gray.
   - The Call Waiting ringback tone is now heard by the calling party.
2. Tell the calling party that the call is waiting.
3. Click the Release icon or press **F8**.
   - The call is released from the console.

Attendant Conference

This feature allows the attendant to arrange a conference call with as many as five conferees. See "Conferencing Multiple Parties Together on a Call" in Chapter 5 for step-by-step instructions.

After the conference call is arranged and all the conferees are added, a conferee may recall you. If so, handle the call as described in the procedure for “Attendant Recall,” later in this chapter.

NOTE:

An attendant can use TGU/TGE tie trunks (if available) to call a user directly on a satellite switch, or to consult with users on the satellite while an external or internal call is on hold. Attendants can access a TGI trunk directly, or with a call on hold. (Consultation with users on the main switch is an internal attendant feature, not involving TGU/TGE or TGI trunks.)

Attendant Control of Trunk Group Access

This feature allows attendants to control access to as many as twelve trunk groups, loudspeaker paging zones, or code calling zones per console. Calls from system users to the trunk group under attendant control redirect to an attendant console.

The Attendant Control of Trunk Group Access feature is normally activated when the Trunk Group button is displayed in pink, indicating a warning. Your System Manager will tell you when and how to use this feature.

When the call is redirected, the call bar display identifies the following:

- Call appearance button; for example: **c=**
- Calling party and trunk that the calling party tried to access
- Call purpose; for example “tc”

To activate attendant control of trunk group access:

1. Click the **Control Activate** feature button.
   - The **Control Activate** feature button is displayed in white.

2. Click the Trunk Group button of the trunk group to be controlled while observing the **Control Activate** feature button and the specified Trunk Group button.
   - If the **Control Activate** feature button is displayed in gray, and the specified Trunk Group button is displayed in white; this indicates that the operation is allowed.
   - If the **Control Activate** feature button changes to pink, then goes gray, and the specified Trunk Group button remains gray; this indicates that the operation is denied. Return to Step 1.

To deactivate attendant control of trunk group access:

1. Click the **Control Deactivate** feature button.
   - The **Control Deactivate** feature button is displayed in white.
2. Click the Trunk Group button of the trunk group for which control is to be deactivated, while observing the **Control Deactivate** feature button and the specified Trunk Group button.
   - If both the **Control Deactivate** feature button and the specified Trunk Group button are displayed in gray; this indicates that the operation is allowed.
   - If the **Control Deactivate** feature button changes to pink, then goes gray, and the specified Trunk Group button remains white; this indicates that the operation is denied. Return to Step 1.

Attendant Direct Trunk Group Selection

This feature allows the attendant to select a trunk group for an outgoing call, loudspeaker paging zone, or code calling zone by clicking a Trunk Group button. The procedures for activating this feature are incorporated into all the calling procedures that require trunk access. Each attendant console has twelve Trunk Group buttons. Feature buttons may also be used as Trunk Group buttons. This allows up to twenty-four Trunk Group buttons on a console.

Attendant Intrusion (Call Offer) (Generic 3r)

Enables an attendant to enter an existing call on either a digital or analog station to offer a new call or message to the called party.

To activate Attendant Intrusion:

1. Answer the call in the usual way.
2. Extend the call as usual.
3. Click the **Intrusion** feature button if the called party is busy or has call waiting.
   - You are bridged on to the call and an intrusion tone (if one is administered) is heard by both parties on the call. Announce the incoming call or message.
4. Click the Transfer icon or press **F6**.

NOTE:

You can perform this step only if Auto Transfer is *not* enabled. If Auto Transfer *is* enabled, the call is transferred automatically.

If no limitations exist (see the following list of interactions) one of the following happens:

- If the called station is digital, the calling party is connected to an idle call appearance button where the called party may pick up the call.
- If the called station is analog, the calling party is Call Waiting until the called party picks up the call.

Interactions

Attendant Intrusion interacts with other features as follows:

- If a station is on a conference call with the administered maximum number of conferees, the attempt to intrude on the station will be denied.
- If there is one call already Call Waiting for the called party, the calling party will not be able to wait for the called party using Call Waiting.
- If a call is established with Data Privacy activated, the attempt to intrude on the call will be denied.
- If a station in a call is administered with Data Restriction, the attempt to intrude on the call will be denied.

- If an attendant attempts to intrude on a call on a station which is a forward-to point of another station, the intrusion will be denied.
- If an attendant attempts to intrude on a busy station where the station is talking to another attendant, the intrusion will be denied.

Attendant Lockout

This feature prevents the attendant from reentering a multi-party call held on the console unless recalled by a system user on the call. If an attempt to reenter a held call is denied, the call bar is displayed in red. This means that the Attendant Lockout feature is active for all attendant consoles. Attendant Lockout does not apply to Individual Attendant Access calls that are held on the console.

NOTE:
This feature is available to PC Console only if it has been correctly administered at the switch.

Attendant Override of Diversion Features (Generic 3r)

Attendant Override of Diversion Features allows you to bypass any diversion features invoked by and/or associated with a dialed extension. Diversion features are any features which, when activated, cause the call to alert to a point different from the dialed station. Specifically, the diversion features are Send All Calls, Call Coverage, and Call Forwarding All Calls. This includes cases in which the call alerts at the dialed station and is later transferred, as in the case of Busy Don't Answer.

Before originating a call, the attendant clicks the **Override** feature button. The feature is activated and the **Override** feature button is displayed in white.

If the attendant dials an invalid extension, clicks the Cancel icon , or presses **F7** while dialing, Attendant Override of Diversion Features remains active.

To deactivate the feature, the attendant again clicks the **Override** feature button; the **Override** feature button is displayed in gray. This feature is also deactivated when the call to a dialed extension is terminated, or a trunk/feature access code is dialed.

The attendant can activate or deactivate Attendant Override of Diversion Features while dialing.

Attendant Priority Queue (Generic 3r)

This feature is used to handle incoming calls to the attendant group or to an individual attendant when the call cannot be immediately terminated to an attendant. Such calls are placed in the Attendant Priority Queue in an ordered fashion based on a priority queue level and the timestamp associated with the call.

Twelve different categories of incoming attendant calls are defined, in which each has a designated Attendant Priority Queue level. Although each of these categories has a given default level, the System Manager may specify a priority queue level for any or all categories through system administration.

The category for Emergency Call to the Attendant Group is always defaulted to the highest queue level priority, with all other categories defaulted to a lower priority.

A call placed in the Attendant Priority Queue is associated with one of the following 12 priority queue categories:

- **Emergency Call to the Attendant Group** — Originated by a station user who has dialed the administerable emergency access code.
- **Assistance Call to the Attendant Group** — Originated by a station user who has dialed the attendant group access code, or who has the Manual Origination feature activated.
- **Attendant Group Call over a CO/FX/WATS Trunk** — An incoming trunk call directed to an attendant group. (This does not include trunk calls returned to the attendant group after a timeout or some type of deferred attendant recall.)
- **Attendant Group Call over a DID Trunk** — Also an incoming trunk call directed to an attendant group, except that it is placed over a DID trunk.
- **Attendant Group Call over a Tie Trunk** — Also an incoming trunk call directed to an attendant group, except that it is placed over a tie trunk (dial-repeating or direct types).
- **Redirected DID or Redirected ACD Call** — A DID or ACD call which times out due to ring and/or no-answer, busy condition (if applicable), or Number Unobtainable; and is rerouted back to the attendant group.
- **Attendant Redirected Call** — A call assigned to terminate at an individual attendant, but subsequently rerouted to the attendant group because the individual attendant console is busy on another call.
- **Attendant Return Call** — A call returned to the attendant after a timeout of an extended station or trunk call. Such a call is intended to return to the attendant who extended it. However, if that console is busy on another call, the extended call is returned to the attendant group. This category is a type of Attendant Redirected Call with its own identity to allow assignment of an Attendant Priority Queue level.

- **Serial Call** — Originated by the Attendant Serial Calling feature when an outside trunk call (designated as a serial call by an attendant) is extended to and completed at a station, and then the station user goes on-hook. If the attendant who extended the serial call is busy on another call, the serial call is redirected to the attendant group.
- **Individual Attendant Access Call** — Originated by a station user, incoming trunk call, or system feature which uses the Individual Attendant Access extension to direct a call to a specific attendant. If the individual attendant is busy on another call, the call is queued until the individual console is idle. Then the queued call is terminated to the individual attendant console.
- **Interposition Call** — Originated by one attendant who directs a call to another attendant by dialing the Individual Attendant Access extension. This category is a type of Individual Attendant Access call with its own identity to allow assignment of an Attendant Priority Queue level.
- **Miscellaneous Call** — Other calls, such as Automatic Circuit Assurance calls, not covered in the above call categories. A priority level is assigned to each category, so that calls are answered on a priority basis. The assignment of a priority level to each category is administerable. The same priority level can be assigned to more than one category. By assigning all categories the same priority level, a first-in/first-out queue is achieved.

Calls are prioritized within an Attendant Priority Queue level by a timestamp associated with each call. This timestamp indicates the relative time (with respect to all calls in the queue) that a call was placed in the Attendant Priority Queue after attempting to terminate to the attendant group or an individual attendant.

When at least one call is queued in the Attendant Priority Queue, the **Calls Waiting** indicator lights on all active attendant consoles. If the number of calls in the queue reaches the administrable attendant group calls waiting threshold, the **Calls Waiting Warning** indicator lights steadily on all active attendant consoles.

Attendant Recall

This feature allows a system user on a 2-party call or a conference call held on the console to recall the attendant for assistance.

When an attendant is recalled, the call purpose “rc” (attendant recall), appears on the call bar display, indicating that a user is requesting assistance. The call bar is displayed in red, and the attendant hears ringing.

If a hunt group call to an individual attendant is being held on the console, a system user who is active on the call cannot recall the attendant. However, this user can transfer calls or make conference calls.

NOTE:
To recall the attendant, an analog telephone user presses the Flash button; a multi-line telephone user presses the Conference button.

To answer the recall:

1. Click the Retrieve icon for the call, or highlight its call bar and press **F7**.
2. Assist the calling party as necessary.

Attendant Serial Call (Generic 3r)

Attendant Serial Call enables the attendant to transfer trunk calls that return to the same attendant position after the called party hangs up. The returned call may then be transferred to another station within the switch, and this can continue to recur.

This feature was developed in response to international needs. In some places, trunks are scarce and Direct Inward Dialing services are unavailable. This can cause an outside caller to have to redial often to get through to a location because trunks are so busy. This feature allows people who are calling from an outside trunk, and who need to make several calls to others on the switch, to keep the use of the line into the switch until all their calls are completed.

To activate Attendant Serial Call:

1. Answer the call in the usual way.
   - Click the **Serial Call** feature button if the calling party needs to speak to more than one person in the company (on an inside extension).
   - The **Serial Call** feature button is displayed in white.
2. Extend the call to the first extension, following the usual procedures.
   - When the calling party is finished with the first call, the party is routed to the attendant console.
   - The call bar shows the incoming call as a Serial Call in the call purpose area of the display. (The “sc” indicates a Serial Call.)
3. Answer the call, then extend it to the next extension.

Once the Serial Call feature is activated, it will remain activated until either the trunk drops from the switch, or the attendant deactivates the feature manually by clicking the **Serial Call** feature button.

Auto Hold (Generic 3r)

When the Auto Hold feature is enabled, an active call is automatically placed on hold when another call appearance button is selected; such as answering an incoming call. Click the Release icon or press **F8** to drop an unwanted active call. Auto Hold (also called Hold-Automatic) is a system-wide feature; it cannot be administered on a per-telephone basis.

NOTE:
This feature is available to PC Console only if it has been correctly administered at the switch.

Auto Start and Don't Split (Generic 3r)

Auto Start allows the attendant to initiate a phone call by pressing any number, *, or #, on the dial pad or keyboard while the focus is within the Feature Button or Call Handling area of the PC Console screen.

The Auto Start feature must be administered system-wide. If the attendant is on an active call and either presses digits on the dial pad, clicks on a Trunk Group button, uses the dial capabilities of PC Directory, or clicks on a Hundreds Group button then clicks on an associated extension, the system automatically splits the call and begins dialing the next call.

When the Auto Start feature is enabled and an attendant dials an AAR number where the minimum and maximum in the AAR analysis table are not equal, then the attendant must dial a pound sign (#) after the dial string, or the call will not be processed.

Touch-tones (DTMF) are not sent when Auto Start is in effect. If you need to send touch-tones to the far end (to pick up answering machine messages, for example) use the Don't Split feature to disable Auto Start temporarily, and to send DTMF.

To use Auto Start to initiate a call when you are not already on a call:

1. Make certain the focus is within the Feature Button or Call Handling area on the PC Console screen. (You can press **F3** to move the focus to the Feature Button area, or **F5** to move the focus to the Call Handling area.)
2. **If you are dialing a telephone number,** dial the outbound number. You can use a Trunk Group button, the search and dial capabilities of PC Directory, your keyboard, or the telephone keypad to access the outgoing trunk and dial the call. You can enter numbers 0 through 9, comma, asterisk (*), and pound sign (#).

3. **If you are dialing an extension number,** you can use the search and dial capabilities of PC Directory, use your keyboard or the telephone keypad to dial the extension number; or click the Hundreds Group button, then the Busy Lamp Field associated with that extension.
   - As soon as you begin to dial, you hear dial tone.
   - The background of an available call bar changes to white.
   - The call bar assigns a letter identification (such as c=) to the call.
   - The call bar displays the called party's telephone number.
   - The number is dialed.
   - The Transfer , Hold , Release and Conference icons are displayed on the call bar that is associated with this call.

To use Auto Start to extend the active call to another extension:

1. Begin dialing, using your keyboard or telephone keypad, using the search and dial capabilities of PC Directory, or using Hundreds Group button and Busy Lamp Field.
   - The active call is automatically put on hold.
2. Once the called party answers, click the Transfer icon or press **F6** to extend the call.
   - The call is released from the console.

To use Don't Split:

1. Click the **Don't Split** feature button to send touch-tones on an active call. The call remains active.
2. **If you are dialing a telephone number,** dial the outbound number. You can use a Trunk Group button, the search and dial capabilities of PC Directory, your keyboard, or the telephone keypad to access the outgoing trunk and dial the call. You can enter numbers 0 through 9, comma, asterisk (*), and pound sign (#).

   If you are dialing an extension number, you can use the search and dial capabilities of PC Directory, use your keyboard or the telephone keypad to dial the extension number; or click the Hundreds Group button, then the Busy Lamp Field associated with that extension.
   - The touch-tones are sent to the far end.
3. Click the Cancel icon or press **F7** to deactivate Don't Split.

Interactions

Auto Start and Don't Split interact with other features as follows:

- If the Auto Start feature is administered, the attendant must use Don't Split when extending a Centralized Attendant Service (CAS) call.
- If Visually Impaired Attendant Service (VIAS) is administered, the Auto Start feature is activated automatically without administration.
- When Auto Start is enabled and an attendant dials an AAR number where the minimum and maximum in the AAR analysis table are not equal, the attendant must dial a pound sign (#) after the dial string, or the call will not be processed.

Automatic Alternate Routing and Automatic Route Selection

Automatic Alternate Routing (AAR) selects the most-preferred route (normally the most-direct route) for private network calls.

Automatic Route Selection (ARS) selects the most-preferred route (normally the least-expensive route) for long-distance calls.

You will place or extend AAR/ARS calls the same way that you place or extend other calls, except that you dial the AAR/ARS access code and the outside number instead of dialing a trunk access code or clicking a Trunk Group button and dialing the number.

If intercept tone is heard after dialing, the call is not authorized. If reorder tone (fast busy) is heard, or if the called party is busy, try the call later.

Automatic Answer

If Automatic Answer (an ACD agent answering option) is on, and you are not currently on a call, you do not need to click the Answer icon or press **F6** to answer an incoming call. However, if you are already on a call, incoming calls are instead put on hold.

This feature is administered at each individual console, instead of for the entire system. The Automatic Answer feature can be used only when you are using a headset connected to the console.

Automatic Circuit Assurance

Refer to the description of this feature in Chapter 9, "Troubleshooting."

Busy Verification of Telephones and Trunks

Refer to the description of this feature in Chapter 9, “Troubleshooting.”

Call Coverage

The Call Coverage feature redirects unanswered internal and/or DID calls to an alternate answering position. (The DID calls are placed by an outside caller and go directly to the called extension without your assistance.) The console can be an alternate answering position.

When a call is redirected through the Call Coverage feature to the console, the call bar display identifies the calling and called parties, and shows a Call Purpose Identifier (code). (Refer to the Glossary for a complete list and description of the various Call Purpose Identifier codes.) The codes associated with Call Coverage, and their meanings, are:

- **b** (Busy) - The called telephone user is active on a call, and the called telephone has a temporarily bridged appearance of the call.
- **d** (Doesn’t Answer or Cover) - The called telephone was not answered, or the calling system user sent the call to coverage. This code also means that the called telephone has a temporarily bridged appearance of the call.
- **s** (Send All Calls) - All calls are being sent temporarily to coverage.

The most common reason for sending all calls to coverage is that the person who normally answers the call is unavailable for an extended period of time (perhaps due to vacation or illness). When Send All Calls is activated at a telephone, all incoming calls to that telephone will immediately redirect to coverage. This redirection means that the telephone does not ring, and the calling party does not have to wait so long for the call to be answered.

When a redirected call arrives at the console, the left portion of the display on the call bar identifies the source of the call (showing a name, number, or other identification) and identifies the destination of the call (showing a name or number). The right portion of the call bar shows the call purpose code. For example:

TOM SMITH to BILL JONES	s

The display above indicates an inside call from Tom Smith to Bill Jones. Mr. Jones has activated Send All Calls, and all of his calls are being temporarily redirected to coverage. Proper names (Smith, Jones, etc.) or extension numbers indicate inside calls.

Outside calls are identified by the name assigned to the trunk group on which the call arrived. For example:

LOCAL to BILL JONES	b

The display above identifies an outside call on trunk group “Local” to Bill Jones. Mr. Jones is busy on another call, so this call has been redirected to coverage.

On a call like this, the attendant can answer with Mr. Jones’ name, give a reason why he did not answer the call, and provide other assistance as required. Other assistance normally means one of the following:

- If the calling party indicates that the call is important, determine if Mr. Jones wants to accept the call. You can talk to Mr. Jones privately by clicking the **Consult** feature button. If Mr. Jones wants to accept the call, extend it back to him.
- If someone else can help the calling party, extend the call to that person.
- If the calling party wants to leave a message for Mr. Jones, take the message and then click the **Leave Word Calling** feature button. This operation leaves an electronic message for Mr. Jones to call you. When he calls, you can relay the message.
- If the calling party is an internal system user and the message is simply to return the call, you can click the **Cover Callback** feature button to leave a message for Mr. Jones to call the calling party. You do not have to verbally relay the message, and the electronic message does not indicate that you were ever on the call.

On any coverage call that you answer, the called party may pick up the call before you disconnect. That is, a 3-way call can exist. If this occurs, you can simply click the Release icon or press **F8** to release the call; the calling and called parties will remain connected.

Handle a redirected call according to the type of call. Your available options, listed below, are Consult and Coverage Callback.

NOTE:
This feature is available to PC Console only if it has been correctly administered at the switch.

Consult

This feature option allows you to talk with the called party after you answer the redirected call.

To consult with the called party:

1. After answering the redirected call, click the Transfer icon or press **F6**.
   - The calling party is separated from the connection.
   - You hear dial tone.
   - The **Split** feature button is displayed in white.
2. Click the **Consult** feature button. The called party receives priority ringback tone.
3. Talk with the called party and determine whether the call will be accepted.
   - If the called party does not want to talk with the calling party, go to Step 4.
   - If the called party wants to talk to you and the calling party, go to Step 6.
   - If the called party wants to talk only with the calling party, go to Step 7.
4. If the called party does not want to talk with the calling party, click the **Split** feature button after the called party hangs up.
   - The **Split** feature button is displayed in gray.
   - You are reconnected to the calling party.
5. Report to the calling party.
   - The procedure is complete.
6. If the called party wants to talk to you and the calling party, click the **Split** feature button.
   - The **Split** feature button is displayed in gray.
   - A three-way connection is established between you, the called party, and the calling party.
7. If the called party wants to talk only with the calling party, click the Release icon or press **F8**.
   - The called and calling parties are connected.
   - The call is released from the console.

Coverage Callback

This option is handled differently for an internal caller and an external caller.

To leave a message from an internal caller:

1. After answering the call, and before releasing it, you can either:

   Click the **Cover Callback** feature button to leave a message for the called party to call the internal calling party; **or**

   Click the **Leave Word Calling** feature button to leave a message for the called party to call you so that you can relay the message.

To leave a message from an external caller:

1. After answering the call, and before releasing it, click the **Leave Word Calling** feature button. This leaves a message for the called party to call you so that you can relay the message.

Call Detail Recording (CDR) Account Code Dialing

The Call Detail Recording (CDR) Account Code Dialing feature collects call details on selected incoming and outgoing trunk calls. It creates call records that contain calling and called numbers, call duration, and information on facility usage. Internal calls do not activate CDR.

A CDR option enables attendants to associate a specific trunk call with its project billing account by dialing the CDR access code and the assigned account code as part of the called number. After answering an incoming trunk call, but before extending the call, the attendant can dial the CDR access code and account code. The CDR access code is used by everyone in the system, and account codes are assigned to individual users. The system CDR printout will show the call charged to the account code that was dialed.

NOTE:
This feature is available to PC Console only if the applicable feature access codes have been correctly administered at the switch.

To assign a call to a specific account in CDR:

1. Click a Call icon , or highlight an empty call bar and press **F6**.
   - A Release icon is displayed on the call bar.
   - You hear the first dial tone.
   - The background of the call bar changes to white.
   - The call bar assigns a letter identification (such as c=) to the call.
2. Dial the CDR access code, then dial the account code.
   - You hear the second dial tone.
3. Continue the call in the normal way, dialing the trunk access code and destination number, extending the call, and so forth.

Call Forwarding All Calls

This feature allows an attendant to activate and deactivate Call Forwarding All Calls for an extension in the system. An attendant's calls cannot be forwarded.

NOTE:
This feature is available to PC Console only if the applicable feature access codes have been correctly administered at the switch.

To activate Call Forwarding All Calls for a particular extension:

1. Click a Call icon , or highlight an empty call bar and press **F6**.
   - A Release icon is displayed on the call bar.
   - You hear the first dial tone.
   - The background of the call bar changes to white.
   - The call bar assigns a letter identification (such as c=) to the call.
2. Dial the Call Forwarding All Calls activation access code.
   - You hear the second dial tone.
3. Dial the extension of the user whose calls are to be forwarded, using your keyboard or telephone keypad, the search and dial capabilities of PC Directory, or the Hundreds Group button and Busy Lamp Field.
   - You hear the third dial tone.

4. Dial the forwarded-to number, again using your keyboard or telephone keypad, the search and dial capabilities of PC Directory, or the Hundreds Group button and Busy Lamp Field. Listen for the call progress tones.
   - **Confirmation tone** — Indicates that Call Forwarding All Calls is activated.
   - **Intercept tone** — Indicates that Call Forwarding All Calls cannot be activated due to restrictions assigned to the forwarding or forwarded-to numbers. Go to Steps 5 or 6.
5. To try again or place another call immediately, click the Cancel icon or press **F7**.
   - You hear a dial tone.
   - Return to Step 2.
6. To abandon the call attempt, click the Release icon or press **F8**.
   - The call is terminated.

To deactivate Call Forwarding All Calls for a particular extension:

1. Click a Call icon , or highlight an empty call bar and press **F6**.
   - A Release icon is displayed on the call bar.
   - You hear the first dial tone.
   - The background of the call bar changes to white.
   - The call bar assigns a letter identification (such as c=) to the call.
2. Dial the Call Forwarding All Calls deactivation access code.
   - You hear the second dial tone.
3. Dial the extension for which the feature is being deactivated (the forwarding extension), using your keyboard or telephone keypad, the search and dial capabilities of PC Directory, or the Hundreds Group button and Busy Lamp Field.
   - Confirmation tone indicates that the feature is deactivated.

Call Park

This feature allows an incoming call to be put on hold at an extension, then retrieved from any telephone in the system. It is particularly useful to an attendant who is asked by a caller to page another party.

You can park a call on any extension in the system. In addition, the console group can have up to 10 extensions that are used exclusively for Call Park. These extensions are not assigned to telephones. They are used only by attendants to park calls, and can be assigned to a Busy Lamp Field for quick access. The Busy Lamp Field associated with that number will be displayed in dark blue to indicate that a call is parked there.

You can use Call Park with the Loudspeaker Paging Access feature. After parking an incoming call, page the desired party and announce the extension where the call is parked. When the paged party dials the Call Park Answer Back code and the parked extension number, the two parties are connected.

If a parked call is not answered within a preset time, the call returns to an attendant console for assistance. Such calls may have been originally parked by an attendant, the system, or a telephone user. When a parked call returns to the console, the call identification is displayed.

NOTE:
This feature is available to PC Console only if the applicable feature access codes have been correctly administered at the switch.

To park a call:

1. Click the Transfer icon or highlight the call bar and press **F6**.
   - The calling party is separated from the connection.
   - You hear dial tone.
   - The **Split** feature button is displayed in white.
2. Dial the Call Park access code.
   - You hear the second dial tone.
3. Use your keyboard or telephone keypad to dial the extension, use the search and dial capabilities of PC Directory, or click the Hundreds Group button, then the Busy Lamp Field that is associated with the extension where the call is to be parked. Listen for the call progress tones.
   - **Confirmation tone** — Indicates that the call is parked. This procedure is complete.
   - **Busy tone** — Indicates that a call is already parked at the dialed extension. Continue to Step 4.

4. To try another extension, click the Cancel icon or press **F7**. Return to Step 1.
   - The busy tone stops.
   - You are reconnected to the calling party.

Code Calling Access

This feature allows the attendant to page a called party with coded chime signals in up to nine areas (zones). In addition, one zone can be provided to activate all zones at the same time. An access code is provided for each individual zone, and an access code is provided to indicate all zones.

When you dial the access code and extension number assigned to the paged party, the system translates the number to a chime code and plays the chimes over the loudspeakers. The call is automatically parked (by the Call Park feature) on the paged party's extension. The paged party answers the call by dialing a Call Park Answer Back code and his/her own extension number.

You can combine call extending procedures and code calling to connect an incoming call to a system user. You have the standard options of releasing the call, waiting for the paged party to answer, or holding the call on the console.

NOTE:
This feature is available to PC Console only if the applicable feature access codes have been correctly administered at the switch.

To extend a call using Code Calling Access:

1. After answering an incoming call, tell the calling party that you are going to break the connection temporarily; then click the Transfer icon or press **F6**.
   - The calling party is separated from the connection.
   - You hear the first dial tone.
   - The **Split** feature button is displayed in white.
2. Dial the desired Code Calling Access code.
   - You hear the second dial tone.

3. Dial the extension number assigned to the person being paged, using your keyboard or telephone keypad, the search and dial capabilities of PC Directory, or the Hundreds Group button and Busy Lamp Field. Listen for the call progress tones.
   - **Confirmation tone** — This indicates that the call is parked on the paged party's extension, and the paged party is being paged. The chime signals will play at once and can play up to three times while the attendant remains connected to the call.
   - **Busy tone** — Go to Step 7.
4. To drop out of the call before the paged and calling parties are connected, click the Release icon or press **F8**. (The chime signals play once.)
   - The call is released from the console.
5. To establish a 3-way call, wait for the called party to answer; then click the **Split** feature button. (The chime signals play up to three times.)
   - The **Split** feature button is displayed in gray.
   - The Transfer and Cancel icons are displayed on the call bar that is associated with this call.
   - The three-way conversation is established.
6. If you wish to connect the first party to the second party and disconnect the console, click the Transfer icon again, or press **F6**. The two parties are connected, and the console is released from the call. This procedure is complete.
7. If a busy tone is heard, click the Cancel icon or press **F7**.
   - Busy tone stops.
   - You are reconnected to the calling party.
8. Report to the calling party, then click the Release icon or press **F8**.
   - The procedure is complete.

Controlled Restrictions

This feature allows the attendant to activate or deactivate the following restrictions for individual telephones or groups of telephones (on a COR basis):

- **Outward** — The telephone(s) cannot be used for placing calls to the public network. Such call attempts receive intercept treatment.
- **Total** — The telephone(s) cannot be used for placing or receiving calls. DID calls are routed to an attendant or a recorded announcement (as specified for the system). All other calls receive intercept treatment.
- **Station-to-Station** — The telephone(s) cannot receive or place station-to-station calls. Such call attempts receive intercept treatment.
- **Termination** — The telephone(s) cannot receive any calls. Incoming calls are routed to the attendant, are redirected through the Call Coverage feature, or receive intercept treatment.

These restrictions override restrictions assigned by the COR. Feature access codes are assigned for individual and group restrictions. The attendant activates the desired restriction by dialing the restriction activation code, followed by a 1 for outward, 2 for total, 3 for termination, or 4 for station-to-station; then dialing the extension number to restrict one telephone or dialing the COR number to restrict a group of telephones. Activation codes for telephones must be different from the COR number.

Feature deactivation codes are also assigned. Deactivation procedures are the same as the procedures for activation.

All telephones with the same COR are affected by a group restriction. For example, if the attendant dials restriction activation code 2 (for total restriction), and 12 (a COR number), this causes all telephones with COR 12 to be restricted from placing or receiving calls.

To activate a restriction:

1. Click a Call icon , or highlight an empty call bar and press **F6**.
   - A Release icon is displayed on the call bar.
   - You hear the first dial tone.
   - The background of the call bar changes to white.
   - The call bar assigns a letter identification (such as c=) to the call.
2. Dial the restriction activation code, followed by the restriction code number (1 for outward, 2 for total, 3 for termination, or 4 for station-to-station).
   - You hear the second dial tone.

3. Dial the extension number or the 2-digit COR number to be restricted. You can use your keyboard or telephone keypad, the search and dial capabilities of PC Directory, or the Hundreds Group button and Busy Lamp Field. Listen for the call progress tones.
   - **Confirmation tone** — Indicates the restriction is activated.
   - **Intercept tone** — Indicates the extension or group was already restricted, or an invalid code was dialed. Go to Step 5.
4. Click the Release icon or press **F8**.
   - The procedure is complete.
5. Click the Cancel icon or press **F7**.
   - Intercept tone stops.
   - Return to Step 2.

To deactivate a restriction:

1. Click a Call icon , or highlight an empty call bar and press **F6**.
   - A Release icon is displayed on the call bar.
   - You hear the first dial tone.
   - The background of the call bar changes to white.
   - The call bar assigns a letter identification (such as c=) to the call.
2. Dial the restriction deactivation code, followed by the restriction code number (1 for outward, 2 for total, 3 for termination, or 4 for station-to-station).
   - You hear the second dial tone.
3. Dial the extension number or the 2-digit COR number that is no longer to be restricted. You can use your keyboard or telephone keypad, the search and dial capabilities of PC Directory, or the Hundreds Group button and Busy Lamp Field. Listen for call progress tones.
   - **Confirmation tone** — Indicates that the restriction is deactivated.
   - **Intercept tone** — Indicates that an invalid code was dialed. Go to Step 5.
4. Click the Release icon or press **F8**.
   - The procedure is complete.

5. Click the Cancel icon or press **F7**.
   - Intercept tone stops.
   - Return to Step 2.

Emergency Access to the Attendant

This feature provides for emergency calls to be placed to the attendant automatically by the system, or dialed by system users; and allows such calls to receive priority handling by the attendant.

When an emergency call is placed, the call will terminate at an available attendant console. The attendant receives visual and audible notification of the emergency call.

If all attendants are busy when an emergency call is placed, the call enters a unique queue for emergency calls. This queue allows attendants to handle emergency calls separately from other calls, and attendants should immediately respond to an emergency call.

When an emergency call enters the Emergency queue, the following will occur:

- At all consoles not active on an emergency call, an **Emergency** feature button (if one is administered) is displayed in pink, and the Emergency tone sounds.
- Any one of the attendants can end the current call (or put it on hold) and receive the call from the Emergency queue. As soon as the attendant answers, the Emergency tone is silenced (if no other calls are in the Emergency queue).
- The call bar identifies the call with the abbreviation EMRG and shows the following information:
  - The calling party identification
  - The number of emergency calls remaining in the queue
- A typical emergency call has this display format:

a = TOM ROBERTS EXT 3041 in EMRG Q

Facility Busy Indication

When a **Facility Busy** feature button is administered, that button provides a visible indication of the active/busy status of a particular trunk group or extension. The associated Trunk Group button and Busy Lamp Field also change color to indicate the status of the trunk group or extension being monitored. The **Facility Busy** feature button is displayed in white when the facility is active or busy, gray when the facility is idle, or pink when an incoming call is received from the monitored extension. The button can also be used for calling the monitored facility.

The **Stored Number** feature button may be used, along with the **Facility Busy** feature button, to display the number of the facility being monitored. This display is accomplished by clicking the **Stored Number** feature button, then the **Facility Busy** feature button.

To use the Facility Busy Indication feature:

1. Observe the desired **Facility Busy** feature button.
   - **Gray** — Indicates that the monitored facility is idle and can be called now. Go to Step 2.
   - **White** — Indicates that the monitored facility is busy. (Even though the facility is busy, it may still be called. Another call appearance button may be idle on a multi-appearance telephone, or the Attendant Call Waiting feature may be activated for a single-line telephone.) This may alternatively indicate a phantom station; one that was administered without hardware translation.
2. Click the **Facility Busy** feature button associated with the monitored facility.
   - The background of the call bar changes to white.
   - The call bar assigns a letter identification (such as c=) to the call.
   - The **Facility Busy** feature button is displayed in white.
   - The normal call progress tones are heard.
3. Continue the call in the normal way.

A **Facility Busy** feature button may also be used as an alarm indicator on the console. Refer to “Console Alarm Indicators” in Chapter 9, “Troubleshooting.”

Facility Test Call

This feature allows authorized personnel to place test calls to specific trunks, touch-tone receivers, time slots, and system tones.

Your System Manager will tell you if you are authorized to use this feature. Detailed information on using this feature is available in the “Trouble-Clearing Aids” section of the *DEFINITY Communications System Generic 1 and Generic 3 Maintenance*, 555-204-105.

Individual Attendant Access

This feature allows users to access a specific attendant console in a system that has more than one console. Each attendant console can be assigned an individual extension number to provide individual attendant access.

To call a specific attendant, a system user dials the individual attendant extension number, rather than dialing 0 (the attendant group number). If DID is provided, an individual attendant can be called directly from outside of the system.

Calls to individual attendants are answered using the same operations as those used for answering any incoming call to the attendant group. In addition to receiving individual calls, each attendant in the system can have up to two calls waiting in an individual attendant queue. When a call is waiting in an individual attendant’s queue, the **Individual Calls Waiting** indicator is displayed in red.

The **Position Available** indicator applies only to calls directed to the attendant group (dial 0 calls); it does not indicate whether or not individual attendant calls can be accepted.

An individual attendant can be a member of a hunt group (DDC or UCD group). Hunt group calls can route to the attendant console, as long as the attendant is not already active on a call, and does not already have a call to that hunt group held on, or split from, the console.

An individual attendant can have a feature button assigned for the hunt group. When an incoming hunt group call arrives, that feature button is displayed in pink. When this occurs, the button can be clicked to answer the call.

An attendant can activate and deactivate the Auxiliary Work or Make Busy functions associated with hunt groups. Activation of either feature temporarily removes the console from the hunt group.

Calls to an attendant console are answered in the following priority: individual attendant extension number calls, followed by “0” dialed calls, then hunt group calls. When calls are waiting in the “0” dialed calls queue, the Call Waiting tone is heard.

To activate the Auxiliary Work or Make Busy function:

1. Click the **Auxiliary Work** or **Make Busy** feature button associated with the hunt group.
   - **If the feature button is displayed in pink** —This indicates that the attendant is the last active member in the group, and there are still calls in the hunt group queue. Auxiliary Work or Make Busy cannot be activated.
   - **If the feature button is displayed in white** — This indicates that the console is temporarily removed from the hunt group.

To deactivate the Auxiliary Work or Make Busy function:

1. Click the **Auxiliary Work** or **Make Busy** feature button again.
   - The feature button is displayed in gray. This indicates that the console is active in the hunt group again.

Integrated Directory

This feature enables the attendant to retrieve extension numbers from the system directory. The directory contains an alphabetical listing of names and numbers of people within the system.

With Integrated Directory, you can use the keyboard to type in a name and retrieve the extension number assigned to that name.

You can enter the Integrated Directory mode whether or not you are active on a call. Also, calls can come in to the console while the Integrated Directory mode is active.

To find a person’s extension, type the number that, on a telephone keypad, corresponds to the first letter of the person's last name. Then press **Next** to move through each entry within the matching group of names.

To retrieve an extension using Integrated Directory, then place a call to that extension:

1. Click the **Integrated Directory** feature button.
   - The **Integrated Directory** feature button is displayed in white.
   - The Display window opens, and prompts you to enter a name.
2. Using your keyboard, type the first letter of the person's last name; or type the number that, on a telephone keypad, corresponds to the first letter of the person's last name. To locate "John Smith", for example, type the number **7**.
   - Names that begin with the first matching letter, and their associated extensions, are displayed.
3. Click the **Next** button until the desired name is displayed.

4. To search for another name, click the **Normal** button to clear the text box, then repeat from Step 1.
5. To call the displayed number, click the **Call** button.
   - You hear dial tone.
   - The normal call progress tones are heard.
6. To exit Integrated Directory mode, click the **Quit** button.

Inter-PBX Attendant Service (IAS)

This feature allows attendant positions for more than one branch location to be concentrated at one central, or main, location.

IAS calls follow the same operations as normal attendant calls. Local attendants at the branch locations can be accessed through the IAS feature. All listed directory numbers, including those for DID calls directed to the branch system, are routed to an IAS attendant when IAS is in effect.

When an IAS call is received by the system at the main location, it is routed to an IAS attendant or put into the attendant queue, if an attendant is not available. When an IAS main attendant extends an IAS call, the routing of the extended call is done by the main system. When the attendant clicks the Release icon or presses **F8** to release the call, the IAS trunk of the system is occupied until the call is dropped.

Interactions

The IAS feature interacts with other features, and attendant console functions, as follows:

- **Attendant Control of Trunk Group Access**

  On a branch system with IAS in effect, an attendant-seeking call is routed first to a local attendant, and then to an IAS attendant if a local attendant is not available. If the call is routed to an IAS attendant and the attendant extends the call back to the trunk group, the following occurs:

  — In a DCS environment, the call is recognized as an attendant-originated call and is not redirected again.

  — In a non-DCS environment, the call is redirected by the branch system again, because the call is recognized as an incoming call.

- **Attendant Display**

  In a non-DCS environment, when a call is routed to an IAS attendant console by IAS, the attendant console displays the call as an incoming tie trunk call. In a DCS environment, when a call is routed to an IAS attendant console from a branch system, and the IAS trunk group is translated as a DCS trunk group, the attendant console displays the calling party's information.

- **Attendant Recall**

  When a call is held by a local attendant at a branch system, and one party on the call uses the Attendant Recall feature, the call always alerts the local attendant console where the call is held, regardless of whether IAS is in effect.

  If an IAS attendant holds an IAS call, the calling parties on the branch system cannot recall the attendant.

- **Attendant Return Calls**

  On a branch system with IAS in effect, if a local attendant extends a call, and the call goes unanswered beyond an administered time, the call is routed to a local attendant console; not to the IAS attendant.

  If an IAS attendant extends an IAS call to an extension on the main system, and the call goes unanswered beyond an administered time, the call is routed to the IAS attendant by the main system.

  If an IAS attendant extends an IAS call to an extension on a branch system, and the call goes unanswered after an administered time, the call is not returned to the IAS attendant.

- **Call Coverage**

  On a branch system with IAS in effect, a call skips a coverage point that is the attendant group ("0").

- **Night Service**

  The IAS feature is deactivated when the branch system is put into night service, and is reactivated when the branch system is put into day service.

- **Special Treatment Calls**

  On a branch system, the DID and advanced private line termination calls that cannot be completed are routed to an IAS attendant, if the attendant group is administered as the "DID Intercept Treatment" designation, and IAS is in effect.

  Calls from advanced private line termination trunks, with the first digit of "0," are routed to an IAS attendant.

- **Timed Reminder**

  On a branch system, when the held-time for a one-party, local-attendant-held call (a call that is held by a local attendant) expires, the timed reminder goes to the local attendant console where the call is held, regardless of whether IAS is in effect.

  If an IAS attendant holds an IAS call, the main system routes the timed reminder to the IAS attendant when the held-time expires.

ISDN-PRI

This feature provides additional information that is displayed on the console. The following terms are associated with ISDN-PRI display information:

- Station Identification (SID) number. This is the 10-digit number associated with each telephone. The SID number includes the area code, office code, and local extension number (for example, 201-772-4168).
- Automatic Number Identification (ANI). This is the calling party's billing number, used by the inter-exchange carrier, through Equal Access.

  If the SID number is not available on an incoming ISDN call, the ANI is displayed.

ISDN-PRI display information is shown on the display. It includes the following:

- Calling Party's Number. When an incoming ISDN-PRI call, that originated at a Generic 1 or Generic 3 system, is received, the calling party's SID number is displayed (assuming that the SID was sent). On other calls, either the SID or the ANI will be displayed. A 10-digit number display includes a dash between the area code (if shown), the office code, and the local number. Extension numbers and 12-digit international numbers are displayed without dashes.
- Calling Party's Name. When an incoming ISDN-PRI call, that originated at a Generic 1 or Generic 3 system, is received, the calling party's name is displayed (assuming the name was sent). Calls originating from public, or other private networks may not provide the calling party's name. If the calling party's name is not available, the display will show "CALL FROM," and the calling party's number.
- Called Party's Number. When a call is placed over ISDN-PRI facilities, the called number is displayed as it is dialed. When the call is answered, the call bar shows the 10-digit number of the telephone where the call was answered. (Note that this may not be the same as the telephone number that was dialed.)
- Called Party's Name. For incoming ISDN-PRI calls, the Generic 1 or Generic 3 system, if administered correctly, can provide the called party's name to the calling party. The calling party's display will always show the name of the person who answers the call. (Again, this may not be the same person that was called.)

- Miscellaneous Identification (MISCID). When a call is placed over ISDN-PRI facilities, additional information about the call (such as an indication that the call is going to coverage) can be displayed on the telephone.

Refer to the following sections for examples of ISDN-PRI displays.

Basic ISDN-PRI Call

A basic ISDN-PRI call has both a calling party, and a called party. The called party answers the call.

When the calling party places the call, the digits are displayed as they are dialed. The display of dialed digits may be overwritten by the trunk group name (depending upon how the system is administered). In all of the following examples, the MISCID information is displayed only if it is available.

If both name and number information are available:

Calling Party's Display:

a=CALLED NAME	CALLED NUMBER	MISCID

Called Party's Display:

a=CALLING NAME	CALLING NUMBER	MISCID

If only the name information is available:

Calling Party's Display:

a=CALLED NAME	MISCID

Called Party's Display:

a=CALLING NAME	MISCID

If only the number information is available:

Calling Party's Display:

a=ANSWERED BY	CALLED NUMBER	MISCID

Called Party's Display:

a=CALL FROM	CALLING NUMBER	MISCID

If neither the name, nor the number information is available:

Calling Party's Display:

a=DIALED NUMBER	MISCID

or:

a=TRUNK NAME	MISCID

Called Party's Display:

a=TRUNK NAME	MISCID

Redirected ISDN-PRI Call

Redirected ISDN-PRI calls are those that have been redirected from the called party's extension, through features such as Call Coverage and Call Forwarding All Calls.

Once the call is connected:

Calling Party's Display:

a=CONNECTED NAME CONNECTED NUMBER MISCID

Called Party's Display:

This information is displayed if the called party bridges on to the redirected call after it has been answered.

a=CONFERENCE 2

Connected Party's Display:

The "connected party" is the person who answered the redirected call. (The "CP" in the following example indicates the call purpose. Call Purpose Codes are explained in the Glossary.)

a=CALLING ID to CALLED ID CP

Leave Word Calling

This feature allows the attendant to leave messages for system users. Messages cannot be left for the attendant group, or for individual attendants. The attendant cannot activate Leave Word Calling via DCS connections.

In addition, the attendant may be a system-wide message retriever and can retrieve messages for other system users. (See "Message Retrieval," later in this chapter, for the procedures to retrieve messages.)

The attendant can retrieve messages, delete messages, and connect the requesting user with the person who left the message. System users call the attendant when they want their messages retrieved.

If display buttons are administered on your PC Console, you can use them to observe the message waiting status of a particular extension. The extension number can be an individual's telephone extension or a hunt group, where a single extension is assigned to all telephones.

The attendant can use Leave Word Calling during the call extending procedure. If the called party is busy or does not answer, the attendant can return to the calling party, take a message, then activate Leave Word Calling at the called telephone.

To store a message for a system user after a call extended to the user's telephone returns busy tone or goes unanswered:

1. When you hear a busy tone or the call goes unanswered after an attempt to transfer, click the **Leave Word Calling** feature button.
   - The **Message** lamp at the called telephone lights.

To cancel a message you left for a system user:

1. Click a Call icon , or highlight an empty call bar and press **F6**.
   - A Release icon is displayed on the call bar.
   - You hear the first dial tone.
   - The background of the call bar changes to white.
   - The call bar assigns a letter identification (such as c=) to the call.
2. Click the **Leave Word Calling Cancel** feature button.
   - You hear the second dial tone.
3. Dial the extension number where the message was left. You can use your keyboard or telephone keypad, the search and dial capabilities of PC Directory, or the Hundreds Group button and Busy Lamp Field. Listen for the call progress tones.
   - **Confirmation tone** — Indicates that the message was canceled. Go to Step 4.
   - **Reorder tone** — Indicates that the message was not canceled. Go to Step 5.
4. Click the Release icon or press **F8**.
   - The procedure is complete.
5. Click the Cancel icon or press **F7**.
   - Call progress tone stops.
   - Dial tone is heard.

To try again, return to Step 2.

Loudspeaker Paging Access

This feature allows the attendant to access loudspeaker paging equipment. Attendants can page individuals by dialing an access code, by dialing an extension, or by clicking a feature button that connects to your paging system.

The allowable paging time (available from your System Manager) is preset for the system. If the preset time interval expires while an announcement is being made, the call is disconnected and intercept tone is heard.

NOTE:
The attendant cannot extend calls to a loudspeaker paging device.

You can combine loudspeaker paging with the Call Park feature to connect a calling party with an inside party. The paged party can retrieve the call by dialing the Answer-Back access code, followed by the parked-on extension number.

NOTE:
This feature is available to PC Console only if the applicable feature access codes have been correctly administered at the switch.

To page using a Page feature button:

1. Check the status of the feature button associated with the desired paging zone:
   - **If the button is gray** — The paging zone is idle. Go to Step 2.
   - **If the button is white** — The paging zone is in use. Wait for the button to go gray, then go to Step 2.
2. Click the feature button associated with the desired paging zone(s).
   - The associated feature buttons (one per paging zone button) are displayed in white.
3. Speak into the handset (or headset) to make the announcement.
   - The announcement is heard in the selected paging zone(s). Go to Step 4.
   - If intercept tone is heard, the announcement was too long. Return to Step 1 and try again.
4. Click the Release icon or press **F8**.
   - The procedure is complete.

To page by dialing the Loudspeaker Paging access code:

1. Click a Call icon , or highlight an empty call bar and press **F6**.
   - A Release icon is displayed on the call bar.
   - You hear dial tone.
   - The background of the call bar changes to white.
   - The call bar assigns a letter identification (such as c=) to the call.
2. Dial the desired Loudspeaker Paging access code and listen for the call progress tones.
   - **Confirmation tone** — Indicates that the paging zone is available. Go to Step 3.
   - **Busy tone** — Indicates that the paging zone is in use. Go to Step 4.
3. Speak into the handset (or headset) to make the announcement.
   - The announcement is heard in the selected paging zone. Go to Step 5.
   - If intercept tone is heard, the announcement was too long. Return to Step 1 and try again.
4. If the paging zone is in use, click the Cancel icon or press **F7**.
   - The busy tone stops.
   - Return to Step 1 to try again, or go to Step 5.
5. Click the Release icon or press **F8**.
   - The procedure is complete.

Loudspeaker Paging Access-Deluxe

Loudspeaker Paging Access-Deluxe is a system option. Check with your System Manager to find out whether it is available on your system.

This feature combines the traditional Call Park and Loudspeaker Paging Access features into a single feature. This allows attendants to access loudspeaker paging equipment, and park calls with the activation of only one feature. This feature also allows you to page for yourself, or for a calling party, and to specify which extension number the paged party is to use.

You can park a call on any extension in the system. If you select your individual attendant extension number as the answer-back or call park number, you can simply press the pound sign (#) key on the telephone dial pad, instead of entering the station's extension number. In addition, the console group can have up to 10 extensions that are used exclusively for Call Park. These extensions are not assigned to telephones; they are used only by the attendants to park calls. These extensions can be assigned to the selector console for quick access. The Busy Lamp Field associated with that extension will be displayed in dark blue to indicate that a call is parked at the extension.

After parking an incoming call, page the desired party and announce the extension number on which the call is parked. When the paged party dials the Call Park Answer-Back code and the extension number on which the call is parked, the two parties are connected.

If a parked call is not answered within a preset time, the call returns to the party who parked the call. When a parked call returns to the console, the original call identification information is displayed.

Nine paging zones, and a single paging zone to activate all nine paging zones, can be provided. A paging zone is the location of the speakers, and is selected based on the likelihood that the paged party will be within the sound of the loudspeaker. Attendants can page individuals by dialing a trunk access code, by dialing an extension, or by clicking a feature button that is administered to connect to your paging system.

In addition to (or instead of) the system loudspeaker paging equipment, a variety of paging systems can be used. The largest of these supports 39 paging zones. Your System Manager will inform you if your system includes this equipment, and will provide the 1- or 2-digit selection codes you may require.

The allowable paging time is preset for the system. (This information is also available from your System Manager.) If the preset time interval expires while an announcement is being made, the call is disconnected and intercept tone is heard.

NOTE:
The attendant cannot extend calls to a loudspeaker paging device.

NOTE:
This feature is available to PC Console only if the applicable feature access codes have been correctly administered at the switch.

To page for the called party:

1. Click the Transfer icon or highlight the call bar and press **F6**.
   - The call is automatically placed on hold.
   - A Retrieve icon is displayed on the call bar.
   - The calling party is separated from the connection.
   - You hear the first dial tone.
   - The **Split** feature button is displayed in white.
2. Dial the paging zone or paging system's trunk access code. You can use your keyboard or telephone keypad, the search and dial capabilities of PC Directory, or the Hundreds Group button and Busy Lamp Field.
   - You hear the second dial tone.
3. Use the touch-tone buttons or keyboard, the search and dial capabilities of PC Directory, or the Hundreds Group button and associated Busy Lamp Fields to dial the extension number where the call is to be parked. Listen for the call progress tones.
   - **Confirmation tone** — Indicates that the call is temporarily parked. Go to Step 4.
   - **Steady tone** — Enter the digits of the selected paging system zone, then go to Step 4.
   - **Busy tone** — Indicates that a call is already parked at the dialed extension. Go to Step 7.
4. Speak into the handset (or headset) to make the announcement.
   - The announcement is heard in the selected paging zone.
   - A confirmation tone indicates that the call is permanently parked.
5. Click the Release icon or press **F8**.
   - The call is released from the console and parked at the dialed extension, waiting for the paged party to respond.
6. Wait (if desired) for the paged party to respond, then click the **Split** feature button.
7. If you want to try another extension, click the Cancel icon or press **F7**.
   - Busy tone stops.
   - You are reconnected to the calling party.
   - Return to Step 1.

To page for self:

1. Click a Call icon , or highlight an empty call bar and press **F6**.
   - A Release icon is displayed on the call bar.
   - You hear the first dial tone.
   - The background of the call bar changes to white.
   - The call bar assigns a letter identification (such as c=) to the call.
2. Dial the paging zone or paging system's trunk access code. You can use your keyboard or telephone keypad, the search and dial capabilities of PC Directory, or the Hundreds Group button and Busy Lamp Field.
   - You hear the second dial tone.
3. Use the touch-tone buttons or the keyboard to dial the pound sign (#), or dial the extension number on the remote system, followed by the pound sign (#). Listen for the call progress tones.
   - **Confirmation tone** — Indicates that the call is parked. Go to Step 4.
   - **Steady tone** — Enter the digits of the selected paging system zone, then go to Step 4.
   - **Busy tone** — Indicates that a call is already parked at the dialed extension. Go to Step 6.
4. Speak into the handset (or headset) to make the announcement.
   - The announcement is heard in the selected paging zone.
   - A confirmation tone indicates that the call is permanently parked.
5. Click the Release icon or press **F8**.
   - The call is released from the console and parked at the dialed extension, waiting for the paged party to respond.
   - The procedure is complete.
6. If you want to try another extension, click the Cancel icon or press **F7**.
   - The busy tone stops.
   - You are reconnected to the calling party.
   - Return to Step 1.

Message Retrieval

The console can be used to retrieve Leave Word Calling and Call Coverage messages for other system users. Other system users may or may not be able to retrieve their own messages. The users who cannot retrieve their own messages will ask you to retrieve them. The display buttons are used for retrieving messages.

When you are retrieving messages, you will click certain display buttons to obtain the desired information. The display buttons are described in the “Display Buttons” section of Chapter 2, “Understanding PC Console.” The display buttons associated with message retrieval, and their meanings, are:

- **Coverage Message Retrieval** - Retrieves Leave Word Calling and Call Coverage messages for telephone users.
- **Next** - Displays the next message.
- **Delete Message** - Deletes the displayed message.
- **Return Call** - Automatically returns the call requested by the currently displayed message.

When a user calls and asks you to see if any messages have been left, simply enter message retrieval mode and check for messages. Read the messages to the user, if there are any. If, after reading a message, the user wants you to delete the message, you can click the **Delete Message** display button to delete it. If the person who left the message is an internal system user, you can also connect the calling party, whose messages you are retrieving, to the person who left the message.

To retrieve a message for a system user:

1. Click the **Coverage Message Retrieval** display button.
   - The display prompts “WHOSE MESSAGES?”
2. Dial the extension number assigned to the requesting user.
   - The display indicates the name of the user for whom messages are being retrieved.
3. Click the **Next** display button.
   - The display shows the user’s message.
4. Read the message to the calling party.
5. If you want to connect the calling party to the call, or delete the currently displayed message, perform that procedure now. (Refer to the following two procedures for step-by-step instructions.)

6. To retrieve the next message, click the **Next** display button.
   - If the display shows the user's next message, return to Step 4.
   - If the display shows "END OF MESSAGES..." or "END OF FILE...," this indicates that all messages have been retrieved.
7. Click the **Normal Mode** feature button.
   - The procedure is complete.

To connect the user to the person who left the displayed message:

1. While the user's message is being displayed, click the **Return Call** display button, click the Transfer icon , or press **F6**.
   - The call is automatically placed on hold.
   - A Cancel icon is displayed on the call bar.
   - The calling party is separated from the connection.
   - You hear dial tone.
   - The **Split** feature button is displayed in white.
2. Dial the displayed extension number, using your keyboard or telephone keypad, the search and dial capabilities of PC Directory, or the Hundreds Group button and Busy Lamp Field.
   - Ringing is heard.
3. Click the Release icon or press **F8**.
   - The call is released from the console.
   - The user is connected to the person who left the message.

To delete a message:

1. While the user's message is being displayed, click the **Delete Message** display button.
   - The displayed message is deleted.

Multiple Listed Directory Numbers

This feature provides access, to the system, over a maximum of 50 listed directory numbers. Calls coming in to these numbers are routed to the attendant console(s) to be extended to the requested person or department. The call bar shows the trunk identification of the trunk group used on the call.

Network Access-Private

This feature allows calls to be connected to networks such as Common Control Switching Arrangement (CCSA), Electronic Tandem Network (ETN), and Enhanced Private Switched Communications Service (EPSCS). A private network is dedicated to a company, and is accessed by dialing the Private Network access code (usually an 8). After accessing the private network, the attendant or calling party can dial the desired number to complete the call.

If intercept tone is heard, the call is not authorized. If reorder tone is heard or the called party is busy, try the call later.

NOTE:
This feature is available to PC Console only if the applicable feature access codes have been correctly administered at the switch.

Network Access-Public

For outgoing calls to the public network, the ARS feature (if available) can be used to select the best route available at the time the call is placed. For manual route selection, dial access codes can be assigned to outgoing routes.

The attendants dial the assigned access code, or click an assigned Trunk Group button to access local central office (CO) trunks, foreign exchange (FX) trunks, and Wide Area Telecommunications Service (WATS) trunks. After a second dial tone is heard, the attendant dials the desired number, clicks the Release icon , or presses **F8** to allow the calling party to dial.

Night Service

This feature directs all attendant group calls, for the principal and daytime attendant console, to a night console, if available. Principal and daytime consoles can still receive individual attendant calls. The night console is identical to the principal console, and operating procedures are the same for both.

If a night console is not provided, an incoming call may be directed to specified extensions, or it may instead cause a gong, bell, or chime to be activated. The call can then be answered from any telephone using the Trunk Answer From Any Station feature.

NOTE:
This feature is available to PC Console only if Night Service has been administered on the principle console on the switch.

To activate Night Service:

1. Click the **Night Service** feature button.
   - The **Night Service** feature button is displayed in white on all attendant consoles.
   - The **Position Available** indicator is turned off at all attendant consoles, except for the night console.

To deactivate Night Service:

1. Click the **Night Service** feature button.
   - The **Night Service** feature button is displayed in gray.
   - The **Position Available** indicator lights at all attendant consoles, except for the night console.

Night Service Disconnect Timer

This timer determines how long an incoming call, without disconnect supervision, can go unanswered at a night service destination when the switch is in night service.

If the Night Console feature is activated, the timer begins when the call is directed/redirected to the NCS. If the Night Station Service feature is activated, the timer begins when the call is directed/redirected to the appropriate NSS. If the Trunk Answer From Any Station feature is activated, the timer begins when the call is directed/redirected to TAAS.

Serial Call (Generic 3r)

This feature allows the attendant to transfer trunk calls that return to the same attendant position after the called party hangs up. The returned call can then be transferred to another station within the switch repeatedly.

This feature was developed in response to places where trunks are scarce, and DID services are unavailable. This situation can cause an outside caller to redial many times to get through to a location because trunks are so busy. Once the calling party, who has several calls to make to others on the switch, gets through to a switch attendant, the Serial Call feature allows the calling party to keep the use of the line into the switch until all the calls are made.

The call bar shows the reason code “sc” in the call purpose area, and the **Serial Call** feature button is displayed in white. If a **Serial Call** feature button is not administered, the feature can still be activated; however no external indication, except for console display, will show that the feature is active.

The Serial Call feature will remain activated until you click the **Serial Call** button, or until the trunk drops from the switch.

Straightforward Outward Completion

This feature allows the attendant to complete an outgoing trunk call for a telephone user, by selecting a trunk and dialing the outside number. The attendant should first determine whether the call should be allowed.

Straightforward Outward Completion is incorporated into the steps of the procedure for extending calls from system telephone users to outgoing trunks. For details, refer to the procedures detailed in Chapter 5, “Console Operations.”

Through Dialing

This feature enables the attendant to select an outgoing trunk for a telephone user, release the call, and permit the user to dial the rest of the number.

Through Dialing is incorporated into the steps of the procedures for extending calls from the system telephone users to outgoing trunks. For details, refer to the procedures detailed in Chapter 5, “Console Operations.”

Time-of-Day Routing

This feature allows outgoing calls to be placed over the most economical route, based on the time of day and day of week. The system can have up to eight routing plans, with one of those plans designated as the standard routing plan for each day of the week.

The Time-of-Day Routing feature allows the normal routing plan to be changed up to six times each day, every day of the week. Two options are available for changing the daily routing plan: Clocked Manual Override and Immediate Manual Override. Your System Manager can tell you which options are available, and when they should be activated.

NOTE:
This feature is available to PC Console only if it has been correctly administered at the switch.

Clocked Manual Override Option

This option allows you to specify the day and time to override the scheduled Time-of-Day Routing plan. You can also specify a day and time for automatic deactivation, or manually deactivate Clocked Manual Override.

In the following procedures, a number from 1 through 8 is used to specify the routing plan; and a number from 1 through 7 is used to specify the day of the week. The week begins with Sunday (represented by 1), and ends with Saturday (represented by 7). Time is entered in military time; 0100 indicating 1:00 am, and 2359 indicating one minute before midnight.

NOTE:
This option is available to PC Console only if it has been correctly administered at the switch. Refer to your switch administration documentation for the complete steps to correctly administer this option.

To activate Clocked Manual Override:

1. Click the **Clocked Override** feature button.
   - The **Clocked Override** feature button is displayed in white.
   - The display shows:

ENTER ACTIVATION ROUTE PLAN, DAY & TIME

2. Use the keyboard or touch-tone buttons to enter (in the following order):

   The routing plan (1 though 8)
   The activation day (1 through 7)
   The activation time (0000 through 2359)

   NOTE:

   If you enter any invalid information on the dial pad, the Clocked Manual Override attempt will be denied and the display will return to Normal mode. If this occurs, return to Step 1 to try again.

   - The **Clocked Override** feature button remains white.
   - The display shows:

ROUTE PLAN: x FOR: ddd ACT-TIME: tt:tt

     In the illustration above, “x” represents the routing plan number, “ddd” represents a 3-letter day-of-the-week abbreviation, and “tt:tt” represents the activation time.

3. If you wish to enter a deactivation date, go to Step 4. Otherwise, skip to Step 6.

4. Click the **Clocked Override** feature button.
   - The **Clocked Override** feature button remains white.
   - The display shows:

     ENTER DEACTIVATION DAY AND TIME

5. Use the touch-tone buttons to enter (in the following order):

   The deactivation day (1 through 7)
   The deactivation time (0000 through 2359)

   - The display shows:

     ROUTE PLAN: x FOR: ddd DEACT-TIME: tt:tt

     In the illustration above, “x” represents the routing plan number, “ddd” represents a 3-letter day-of-the-week abbreviation, and “tt:tt” represents the deactivation time.

6. Click the **Normal Mode** feature button.
   - The **Clocked Override** feature button remains white.
   - Clocked Manual Override is in effect.

To manually deactivate Clocked Manual Override:

1. Click the **Clocked Override** feature button.
   - The **Clocked Override** feature button is displayed in gray.
   - Clocked Manual Override is deactivated, and the scheduled daily routing plan goes into effect.

Immediate Manual Override Option

When this option is activated, the currently active routing plan is changed immediately to a new plan. The new plan remains in effect until the override is manually deactivated, or until the next scheduled routing plan takes effect.

To activate Immediate Manual Override:

1. Click the **Immediate Override** feature button.
   - The **Immediate Override** feature button is displayed in white.
   - The display shows:

     OLD ROUTE PLAN: x ENTER NEW PLAN:

     In the illustration above, “x” represents the number (1 through 8) of the routing plan currently in effect.

2. Use the keyboard or the touch-tone buttons to enter the number (1 through 8) of the routing plan that should go into effect.

NOTE:

If you select any button other than 1 through 8, the Immediate Manual Override attempt will be denied and the display will return to Normal mode. If this occurs, return to Step 1 to try again.

- The **Immediate Override** feature button remains white.
- The display is updated to show:

  OLD ROUTE PLAN: x ENTER NEW PLAN: y

  In the illustration above, “y” represents the number you just entered.

3. Click the **Immediate Override** feature button, or the **Normal Mode** feature button.
   - The **Immediate Override** feature button remains white.
   - Immediate Manual Override is in effect.

To deactivate Immediate Manual Override:

1. Click the **Immediate Override** feature button.
   - The **Immediate Override** feature button is displayed in gray.
   - Immediate Manual Override is deactivated, and the scheduled daily routing plan goes into effect.

Timing

Four timing features are available. They are grouped here for your convenience.

Alerting Timer (Generic 3)

This feature terminates a held or unanswered call on a call bar when the call has not been answered within a preset length of time (usually about 40 seconds).

When a held or unanswered call is not answered before the preset time period expires, the associated call bar is displayed in red, and the attendant hears an alerting tone.

No Answer Timer (Generic 3)

This feature increments a delay threshold count when a call to the attendant has not been answered within a preset length of time (usually about 20 seconds).

Return Call Timeout

This feature sends a special ringing tone to the attendant when a transferred call has not been answered within a preset length of time, and has returned to the console.

The expiration time period for return call timeout is administered for unanswered extended calls.

If an extended call is not answered within the administered expiration time period, the call bar is displayed in white and the attendant hears a ringing tone. An extended call can also be held. If this is the case, the returning call will cause the call bar to be displayed in red.

To answer the return call timeout:

1. Click the Answer icon for the incoming call, or highlight its call bar and press **F6**.
   - Ringing stops.
   - You are connected to the calling party.
   - The Transfer , Hold , Release and Conference icons are displayed on the call bar that is associated with this call.
   - The **Position Available** indicator is turned off.
2. Report to the calling party, and determine what type of service the calling party wants.
   - If the calling party wants to continue waiting, extend the call or place the call on hold again.
   - If the calling party does not want to continue waiting, go to Step 3.
3. Click the Release icon or press **F8**.
   - The call is released from the console.
   - The procedure is complete.

Timed Reminder

This feature sends a special ringing tone to the attendant if one of the following conditions exist:

- A call, which has been on hold at the console for a period of time longer than the preset maximum, needs attention.
- An extended call has not been answered within a preset time period, and has returned to the console.

The timed reminder expiration times are administered separately for held calls and unanswered extended calls.

When the time for a held call expires, the call bar is displayed in red, and the attendant hears a timed reminder tone. When an extended call is not answered before the time expires, the call bar is displayed in white, and the attendant hears a timed reminder tone. An extended call can also be held.

To answer the timed reminder call:

1. Click the Answer icon for the incoming call, or highlight its call bar and press **F6**.
   - Ringing stops.
   - You are connected to the calling party.
   - The call bar identifies the call and call purpose (“rt” for a returned extended call).
   - The Transfer , Hold , Release and Conference icons are displayed on the call bar that is associated with this call.
   - The **Position Available** indicator is turned off.
2. Report to the calling party, and determine what type of service the calling party wants.
   - If the calling party wants to continue waiting, extend the call or place the call on hold again.
   - If the calling party does not want to continue waiting, go to Step 3.
3. Click the Release icon or press **F8**.
   - The call is released from the console.

Trunk Group Busy/Warning Indicators to Attendant

Refer to the description of this feature in Chapter 9, “Troubleshooting.”

Trunk Identification

Refer to the description of this feature in Chapter 9, “Troubleshooting.”

Trunk-to-Trunk Transfer

This feature allows the attendant to originate two outgoing trunk calls, and connect them together. For example, if two company employees are on business trips to different cities and need to talk to each other, the attendant may be asked to make this connection.

The Attendant Lockout feature, if available, will not be active when a trunk-to-trunk call is placed. Also, when the Trunk-to-Trunk Transfer feature is used for two outgoing trunks, you must hold the call on the console. The system will not allow you to use the Release icon or **F8** to release from such a call. If you click the **Forced Release** feature button, the call will be disconnected.

The Automatic Route Selection (ARS) feature, if available, can be used with the Trunk-to-Trunk Transfer feature.

Extending an incoming trunk call to an outgoing trunk is described in the procedures within Chapter 5, “Console Operations.”

To arrange a Trunk-to-Trunk Transfer:

1. Call the first outside party.
2. When the first party answers, explain the purpose of the call. Ask the party to wait to be connected. (If the first party does not answer, click the Release icon or press **F8,** and try the call later.)
3. Tell the first outside party that you are going to break the connection temporarily; then click the Transfer icon or press **F6**.
   - The call is automatically placed on hold.
   - A Cancel icon is displayed on the call bar.
   - The first party is separated from the connection.

- You hear dial tone.
- The **Split** feature button is displayed in white.

4. Call the second outside party.
5. When the second party answers, explain the purpose of the call. Ask the party to wait to be connected. (If the second party does not answer, go to Step 8.)
6. Click the **Split** feature button.
   - The **Split** feature button is displayed in gray.
   - The Transfer and Cancel icons are displayed on the call bar that is associated with this call.
   - The three-way conversation is established.
7. If you wish to connect the first party to the second party and disconnect the console, click the Transfer icon again, or press **F6**. The two parties are connected, and the console is released from the call. This procedure is complete.
8. If a busy tone is heard, click the Cancel icon or press **F7**.
   - Busy tone stops.
   - You are reconnected to the calling party.
9. Report to the calling party, then click the Release icon or press **F8**.
   - The procedure is complete.

Operating in a Distributed Communications System Environment

7

A DCS configuration consists of 2 to 20 private switches that are interconnected. These switches may be in different geographical locations. To certain system features, however, the DCS configuration appears as a single switch. These features, and their usage, are listed alphabetically in this chapter.

A feature is transparent if it works the same (from the user's perspective) whether the consoles and telephones involved are located at the same switch or on different switches. Refer below for a description of each feature's degree of transparency and any unique aspects pertaining to its operating procedure when the system is in a DCS environment.

Attendant Call Waiting

This feature operates the same as when the system is not in a DCS environment.

Attendant Control of Trunk Group Access

The operating procedures required to activate control of a trunk group at another switch (remote trunk group) are the same as those required when the trunk group is at the local switch.

If a trunk is controlled, callers who attempt to use the trunk get Intercept Treatment from the switch where the trunk is located, not necessarily from the switch that activated the Attendant Control of Trunk Group Access (ACTGA). Therefore, an attendant that activates ACTGA for a trunk on a remote switch causes intercepted calls to route to the attendants on the remote switch (assuming the remote switch uses its own attendants).

Attempts to activate ACTGA for a remote trunk group that has a different Trunk Access Code (TAC) than the local switch causes the Trunk Group button to be displayed in pink. Contact the System Administrator if this problem occurs.

Attendant Display

In a DCS environment, the Attendant Display feature has the same transparency with respect to Calling Party Identification, Called Party Identification, Class of Restriction (COR) display, and Class of Service (COS) display.

On outgoing calls, the display of called party information may be delayed a few seconds until the required information arrives from the remote switch.

Automatic Circuit Assurance

Transparency of the Automatic Circuit Assurance (ACA) feature in a DCS environment allows an attendant at a Generic 1 or Generic 3 end-point node to activate or deactivate ACA referral calls for the entire DCS network. This transparency also allows the referral calls to be generated at a switch other than the switch that detects the trunk problem. Referral calls are handled the same way as in a non-DCS environment. When a referral call is generated from a remote DCS node, the call bar associated with that call indicates the PBX ID of the remote node that originated the alarm.

Busy Verification of Telephones and Trunks

Attendants can busy verify telephones at a remote location by clicking the **Busy Verify** feature button, then entering the desired UDP extension number. The verification process continues as it would if the telephone being verified were on the local switch.

Attendants can also busy verify a trunk at a remote location using two different methods. In the first method, the attendant clicks the **Busy Verify** button, accesses the DCS tie trunk to the remote switch by dialing the trunk access code or by clicking on the Trunk Group button, then clicks the **Busy Verify** button again, and proceeds as if the trunk were on the local switch.

The second method requires that a Trunk Group button be administered for the remote trunk group. With this method, the attendant clicks the **Busy Verify** button and the Trunk Group button for the remote trunk group, followed by the desired member number.

The call bar display for DCS busy verification does not indicate the status of the attempt; such as “INVALID,” “TERMINATED,” “BRIDGED,” or “OUT OF SERVICE”.

Refer to Chapter 9, “Troubleshooting,” for the procedures to activate the Busy Verification of Telephones and Remote Trunks feature.

Call Forwarding All Calls

The operating procedures required to activate and deactivate this feature for an extension at a remote switch are the same as those required at the local switch. However, there are some restrictions on length of the forwarded-to number. When using the console to forward the calls of a remote extension in a DCS environment, the forwarded-to telephone number must not be longer than 10 digits. These 10 digits can include a 3-digit Facility Access Code followed by a typical 7-digit telephone number. Also, no authorization codes can be included in the forwarded-to telephone number.

Direct Trunk Group Selection

The operating procedures for this feature are the same as those required at the local switch.

Trunk Group Busy/Warning Indicators

The Busy/Warning indicators provide the same indications for trunk groups at a remote switch as they do for those at the local switch.

Operating in a Centralized Attendant Service Environment

8

An Overview of the CAS Environment

The Centralized Attendant Service (CAS) feature allows system users served by separate switches at two or more locations to concentrate the attendant positions at one location. This location is called the CAS main. The other locations, typically without attendants, are called CAS branches. All locations within the CAS environment have separate LDNs.

Incoming calls to the CAS main are handled as if the switch were a stand-alone system. Any attendant-seeking calls at a CAS branch are routed to the attendant consoles at the CAS main over Release Link Trunks (RLTs). The RLTs are special trunks that are used only for attendant-seeking calls from the CAS branches. The CAS attendant cannot originate a call over an RLT.

The CAS calls may be any calls that would normally go to the local attendant console. The CAS attendant answers these calls and then extends them (over the same RLT) to the requested extension or external number at the branch. When the CAS attendant releases, the RLT is free for another call. The extended call will return to a CAS console if it is not answered within a preset time.

The CAS calls can also be held at the console, placed on Remote Hold, or released (ended). The CAS calls can be held on the console, just like any other call. Remote Hold is a feature used by CAS attendants that allows a call to be held at the branch location. This feature frees the console and the RLT for other calls. As with extended calls, a call on Hold or Remote Hold will return to a CAS console if it is not answered within a preset time.

To speed the dialing procedure when extending a CAS call, the CAS attendant can use the following features:

- Abbreviated Dialing
- Attendant Direct Trunk Group Selection

- Hundreds Group button and associated Busy Lamp Fields

NOTE:

The Busy Lamp Fields do not indicate busy extension numbers at the branch locations.

- Facility Busy Indication

Also, when extending a CAS call, the attendant can use some of the branch features such as Code Calling Access and Loudspeaker Paging Access.

The following features do not function on CAS calls:

- Attendant Auto-Manual Splitting
- Attendant Conference

Tones Associated with CAS Calls

In addition to the normal attendant console tones, the following call identification tones are associated with CAS calls:

NOTE:
LDN (incoming trunk) call — three short bursts of low-pitched tone. Branch locations served by 770A or 812A PBX switches do not send LDN call identification tone.

- **Dial 0 call from branch (telephone to console)** — An on/off low-pitched tone.
- **Recall on Call Waiting** — A short burst of low-pitched tone.
- **Remote Hold Recall** — A series of four through six cycles of an on/off low-pitched tone.
- **Recall on Don't Answer** — Normal ringback tone for about 1/4 second, followed by connection to normal ringing.

Attendants who are authorized to use the Facility Test Call feature (see Chapter 6, “Switch Features”) can access and listen to the tones associated with CAS calls. To access these tones, perform the following procedure:

1. Dial the Facility Test Call access code. Dial tone is heard.
2. Press the * key and one of the following 2-digit tone numbers:

Tone Number	Type of Call
32	Listed Directory Number (LDN)
33	Dial 0
36	Recall on Don’t Answer
38	Recall on Call Waiting Tone
40	Remote Hold Recall Tone

Call Bar Display Information

When an incoming attendant-seeking call for a branch location arrives at the CAS console, the call bar will identify the calling location. For example, the call bar might show “PARKWAY” — indicating that the call is intended for the Parkway location of your company. You can answer the call with the name of that location. If the system is part of a DCS, the call bar will show the following information for CAS calls:

Type of Call	Call Bar Will Show
LDN	Incoming Trunk Name
Dial 0	Caller’s Name and Extension
Remote Hold Recall	Caller’s Name and Extension
Others (including Coverage Calls)	RTL Name and Trunk Access Code

A **Trunk Name** feature button, which is useful in a DCS environment, can be administered on the PC Console. Since the normal DCS display from a system user is name and extension number, you may not know which branch location originated the call. However, if you click the **Trunk Name** feature button while on an active call from a system user, the RLT name will be displayed.

The **Trunk Name** feature button can also be clicked to display the name of an outgoing trunk group that is administered for no outgoing display.

Operating Procedures

To answer an incoming CAS call:

1. Click the Answer icon for the incoming call, or highlight its call bar and press **F6**.
   - Ringing stops.
   - Call identification tone (if it is provided by the branch) is heard.
   - The call bar identifies the originating branch location.
   - You are connected to the calling party.
   - The Transfer , Hold , Release , and Conference icons are displayed on the call bar that is associated with this call.
   - The **Position Available** indicator is turned off.
2. Assist the calling party as necessary. The call can now be extended, held at the console, placed on Remote Hold, or ended.

To extend a CAS call to the originating branch:

1. Click the Transfer icon , or highlight the call bar associated with the call and press **F6**.
   - The call is automatically placed on hold.
   - A Retrieve icon is displayed on the call bar.
   - The calling party is separated from the connection.
   - You hear dial tone from the branch location.

NOTE:
Do not go to the next step until you hear dial tone. The call will not go through if you dial the number before you hear dial tone.

2. Dial the internal or external number to which you want to transfer the call. You can either:

   Use your keyboard or telephone keypad to dial the extension or external number, or

   Click the Hundreds Group button, then the Busy Lamp Field that is associated with a particular extension.

3. If Auto Transfer is *not* enabled, click the Release icon or press **F8**, to complete the transfer. You can do this either before or after your calling party has answered. (If Auto Transfer *is* enabled, this step will occur automatically.)
   - The call is released from the console and transferred.
4. If the called party is busy, does not answer, or declines to talk to the calling party, click the Cancel icon or press **F7**.
   - You are reconnected to the calling party.
   - The call attempt is canceled.
   - Call progress tones stop.

   Explain to the calling party that the called party cannot be reached. If the calling party wants to wait, extend the call again; then click the Release icon or press **F8**. If the calling party does not want to wait, take a message or ask the calling party to try again later, then click the Release icon or press **F8**.

To extend a CAS call to a branch other than the originating branch:

1. Click the Transfer icon , or highlight the call bar associated with the call and press **F6**.
   - The call is automatically placed on hold.
   - A Retrieve icon is displayed on the call bar.
   - The calling party is separated from the connection.
   - You hear dial tone from the branch location.

NOTE:
Do not go to the next step until you hear dial tone. The call will not go through if you dial the number before you hear dial tone.

2. If your company locations do *not* have a UDP, dial the trunk access code for the requested other branch location (as administered at the originating branch).
3. Use your keyboard, telephone keypad, or Hundreds Group button and Busy Lamp Field to dial the desired extension number of the other branch.
4. If Auto Transfer is *not* enabled, click the Release icon or press **F8**, to complete the transfer. You can do this either before or after your calling party has answered. (If Auto Transfer *is* enabled, this step will occur automatically.)
   - The call is released from the console and transferred.
5. If the called party is busy, does not answer, or declines to talk to the calling party, click the Cancel icon or press **F7**.
   - You are reconnected to the calling party.
   - The call attempt is canceled.
   - Call progress tones stop.

   Explain to the calling party that the called party cannot be reached. If the calling party wants to wait, extend the call again; then click the Release icon or press **F8**. If the calling party does not want to wait, take a message or ask the calling party to try again later, then click the Release icon or press **F8**. The call is released from the console.

To put a CAS call on Remote Hold at the originating branch location:

NOTE:
When a CAS caller wishes to wait, the call should be put on Remote Hold (not Hold) to free the console and the RLT for other calls.

1. Click the Transfer icon , or highlight the call bar associated with the call and press **F6**.

- The call is automatically placed on hold.
- A Retrieve icon is displayed on the call bar.
- The calling party is separated from the connection.
- You hear dial tone.

2. Dial the Remote Hold feature access code as administered at the originating branch location.
3. Listen for the Remote Hold confirmation tone, then click the Release icon or press **F8**.
   - The call is released from the console.

To answer a returning call that was previously extended or put on Remote Hold:

1. Click the Answer icon for the returning call, or highlight its call bar and press **F6**.
   - Ringing stops.
   - Recall tone (if it is provided by the branch) is heard.
   - You are connected to the returning call (and to the ringing line if the call was previously extended).
   - The Transfer , Hold , Release and Conference icons are displayed on the call bar that is associated with this call.
   - The **Position Available** indicator is turned off.
2. Report to the calling party.
   - If the calling party still wants to wait and the call was previously extended, go to Step 3.
   - If the calling party wants to be connected to another extension, go to Step 4.
   - If the calling party wants to continue to hold, reactivate Remote Hold.
3. Click the Release icon or press **F8**.
   - The call is re-extended. (Dialing is not necessary.)

NOTE:
You need to re-extend (dial again) if the previously extended call was extended to a single-line telephone or if Remote Hold was reactivated.

4. Click the Cancel icon or press **F7**.
   - The ringing line is dropped from the connection, but only if it was previously extended.
   - You may now extend the call to another extension.

CAS Backup Service

The CAS Backup Service provides for CAS attendant-seeking calls to terminate at an extension number at the CAS branch location. This extension number may be assigned to an attendant or a telephone user.

The CAS Backup Service can be activated:

- Manually by the user at the CAS backup position.

  When CAS Backup Service is manually activated, it can also be manually deactivated.
- Automatically by the system when the RLTs are maintenance-busy, or are out of service.

  When the system activates CAS Backup Service, the system will also deactivate it when the RLTs are available again. The user at the CAS backup position cannot deactivate CAS Backup Service if it was activated by the system.

When CAS Backup Service is active, all attendant-seeking CAS calls for the branch location will terminate at the backup position. The backup position can then extend or transfer calls just like any other incoming call.

To activate CAS Backup Service:

1. Click the **CAS Backup** feature button.
   - The **CAS Backup** feature button is displayed in white.

To deactivate CAS Backup Service:

1. Click the **CAS Backup** feature button.
   - The **CAS Backup** feature button is displayed in gray.

CAS Night Service Operations

When the CAS attendant activates Night Service for the CAS main location, CAS calls will terminate at the CAS main night service destination. If the night destination is not a console, CAS calls will be answered at a telephone.

When a CAS call is extended by a Night Service telephone user, that call will return to the Night Service telephone if it is not answered. The Night Service telephone user can then put the call on Remote Hold (if the calling party wishes to wait), or ask the calling party to call again later.

Troubleshooting

9

Your console has access to many features that are helpful in troubleshooting various problems. This chapter presents those features, as well as procedures and recommendations that will assist you in isolating and analyzing problems, before escalating them to higher-level support personnel.

Refer to the appropriate section in this chapter, according to the type of problem you are attempting to identify and correct.

This chapter includes the following information, in the order listed below:

- Backup Procedures and Considerations
- Troubleshooting PC Console Installation and Usage Problems
- Troubleshooting Switch Problems
- Recovering from a Power Failure
- Recovering from a PC Failure

Backup Procedures and Considerations

Regular backup procedures are an essential element in the successful operation of your PC Console. Your PC must maintain a sizable chunk of information that is critical to your organization. In the event of a power failure, PC failure, or switch failure, it is extremely important to have the information maintained on the PC accessible elsewhere, as well.

To protect the data on your PC, implement a regular backup procedure. Information can be backed up (stored) on a diskette, tape, or remote network drive. It is also wise to follow a circular backup routine; keeping the last three backup files — and only overwriting information older than that. In the event of a disk failure, you can still access and restore information that is relatively recent.

During installation, you must specify the directory to which PC Console software and information is stored. If you specify a directory other than the default PC Console directory (pccon2), make a note of the name and location of that directory. Then implement a regular backup plan; backing up all information within the PC Console directory.

In addition to maintaining backups of your software, it is important to recognize the importance of hardware-related issues. If, for example, you have displaced an older non-PC based console, you may wish to retain it, for use in the event of a PC failure. A backup power source is also wise. If your PC Console is powered by a local electrical outlet, consider augmenting the configuration with a battery backup system. This is particularly important if your switch is supported in a similar manner.

Lastly, consider backing up the telephone outlet to which PC Console is connected. If an outlet (or related wiring) should fail, it is extremely helpful to have a second outlet available locally. This permits PC Console to be reconnected very quickly to your system, in the event of a problem with the telephone jack.

Troubleshooting PC Console Installation and Usage Problems

If you encounter difficulties installing or using PC Console, consult the charts that begin on the next page, for an indication of the probable cause, and recommended solution for your situation.

Troubleshooting Problems with the Telephone or PassageWay Adapter

Symptom	Probable Cause	Recommended Solution
You cannot use the DCP telephone in the normal manner.		This is not a problem. The PC Console environment disables the normal functionality of the telephone.
Pressing the **Speakerphone** button on the DCP telephone produces a dial tone.	On the switch side, the port is administered for a DCP telephone.	At the switch, re-administer the port to indicate that an attendant console is in use.
Pressing the **Speakerphone** button on the DCP telephone does not cause the **SPKR** lamp to light.	The telephone is not receiving power, or it may be defective.	Verify that your system is actually receiving power. Double-check your installation configuration, and verify that all required connections are correctly made. (Refer to the configuration instructions and options detailed in Chapter 1, “Installation.”) If the problem persists, replace the DCP telephone.
You can hear the incoming caller through the speaker, but the caller cannot hear you.	You may be using a DCP telephone that has one-way speaker capability.	Use the handset on the telephone, instead of using the speaker. Add a 500A adapter and headset to your installation. (Refer to the configuration instructions and options detailed in Chapter 1, “Installation.”) Replace the DCP telephone with one that includes a full-duplex speaker.
The lights on the PassageWay Adapter, or the 8411 or CallMaster VI telephone do not light.	The PassageWay Adapter, 8411, or CallMaster VI telephone is not receiving power, or it may be defective.	Verify that your system is actually receiving power. Double-check your installation configuration, and verify that all required connections are correctly made. (Refer to the configuration instructions and options detailed in Chapter 1, “Installation.”) If the problem persists, replace the PassageWay Adapter, 8411, or CallMaster VI telephone.
The red and green lights on the PassageWay Adapter, or in the tenth Call Appearance position on the 8411 telephone, are flashing in an alternating pattern.	The power supply may be connected to the wrong jack, or the telephone may be defective.	Double-check your installation configuration, and verify that all required connections are correctly made. (Refer to the configuration instructions and options detailed in Chapter 1, “Installation.”) If the problem persists, replace the DCP telephone.

The red light on the PassageWay Adapter, or in the tenth Call Appearance position on the 8411 telephone, remains steadily lighted when PC Console is running.	PC Console is administered to use the wrong COM port.	Verify that the COM port to which the PassageWay Adapter or 8411 telephone is physically connected is consistent with the port identified in the System Parameters folder of the System Administration window. If it is not, either reconfigure the hardware, or change the software settings to point to the serial port actually connected to the PassageWay Adapter or 8411 telephone. Exit, then relaunch PC Console to effectuate this change. Verify that the port, on the switch side, is properly administered as an attendant console.

Troubleshooting Error Messages

Symptom	Probable Cause	Recommended Solution
Error message “Insufficient memory” is displayed.	There is not enough available memory to run the PC Console application or related Help files. This may be a hardware-related problem, or it may simply indicate that too many applications are running.	Exit the PC Console application. Verify that the PC meets the minimum configuration requirements, including 16 MB of RAM dedicated to the PC Console application. (The minimum requirements are detailed in Chapter 1, “Installation.”) If it does not, upgrade or replace the PC. Close down any open applications, and exit Windows. Relaunch Windows, relaunch PC Console, and run only those applications that are actually necessary in your environment.
The PC is indicating one or more configuration error conditions. The messages you see may include “Windows not installed,” “Insufficient memory,” or “Super VGA not installed.”	The PC you are using does not meet the minimum requirements to run the PC Console application.	Upgrade your PC. Refer to the minimum requirements for this PC, listed in Chapter 1, “Installation.”
An error message indicates “Overflow.” When you click on OK to clear the message and return to the PC Console application, nothing works.	Windows is overloaded.	Exit the PC Console application. Relaunch, then immediately re-exit PC Console again. This will clear up any hung Windows processes. It is also wise to close all other applications, and exit Windows to free up all memory resources. Then relaunch Windows, relaunch PC Console, and run only those applications that are actually necessary in your environment.

When attempting to launch PC Console, a Windows “Error 3520” message is displayed on the screen.	“Share” is not enabled on your PC. The PC Console application requires that files be sharable.	Close PC Console and all other software applications. Locate your autoexec.bat file. For Windows 3.11, this file is located in your root directory on c:\ Open the file using any text editing software (Notepad, Word, or DOS editing commands, etc.). Locate the last line that begins with the word “SET.” Add a new line immediately after this. The new line should read: **c:\dos\share.exe /l:500 /f:5100** Follow this with a carriage return. If you are running Windows 3.11, exit out to DOS. Follow the usual procedure to reboot your system. Reload Windows and the PC Console application.
When launching PC Console, a warning message indicates “COM Port in use.”	An application other than PC Console is vying for the administered COM port.	Verify that no application, other than PC Console, is allowed to vie for the COM port. Verify that the COM port connection to the PassageWay Adapter, 8411 telephone, or CallMaster VI telephone is consistent with the port identified in the System Parameters folder of the System Administration window. If it is not, either reconfigure the hardware, or change the software settings to point to the serial port actually connected to the PassageWay Adapter, 8411 telephone, or CallMaster VI telephone. Exit, then relaunch, PC Console to effectuate this change.

When launching PC Console, a warning message indicates “PassageWay not found.”	The COM port is not administered correctly, or the PassageWay Adapter, 8411 telephone or CallMaster VI telephone is not receiving power or is not properly connected to the switch.	Double-check your installation configuration, and verify that all required connections are correctly made. (Refer to the configuration instructions and options detailed in Chapter 1, “Installation.”) Verify that the COM port connection to the PassageWay Adapter, 8411 telephone, or CallMaster VI telephone is consistent with the port identified in the System Parameters folder of the System Administration window. If it is not, either reconfigure the hardware, or change the software settings to point to the serial port actually connected to the PassageWay Adapter, 8411 telephone, or CallMaster VI telephone. Exit, then relaunch, PC Console to effectuate this change. Verify that the application is communicating with the PassageWay Adapter, 8411 telephone, or CallMaster VI telephone. If you are using a PassageWay Adapter, its green LED should be steadily lighted. If you are using an 8411 telephone, then button 10 on the telephone should be steadily lighted. If this is not the case, refer to the product’s troubleshooting documentation to troubleshoot this component. Verify that the port, on the switch side, is properly administered as an attendant console.

A General Protection Fault occurs, and the error message indicates PC Console caused the error.	The PassageWay Adapter, 8411 telephone, or CallMaster VI telephone has lost connectivity with the switch.	Double-check your installation configuration, and verify that all required connections are correctly made. (Refer to the configuration instructions and options detailed in Chapter 1, “Installation.”) Then reboot your PC and relaunch the PC Console application. If this does not clear up the problem, verify that the COM port connection to the PassageWay Adapter, 8411 telephone, or CallMaster VI telephone is consistent with the port identified in the System Parameters folder of the System Administration window. If it is not, either reconfigure the hardware, or change the software settings to point to the serial port actually connected to the PassageWay Adapter, 8411 telephone, or CallMaster VI telephone. Again, exit the PC Console software, reboot your PC and relaunch PC Console to effectuate this change. Also verify that the application is communicating with the PassageWay Adapter, 8411 telephone, or CallMaster VI telephone. If you are using a PassageWay Adapter, its green LED should be steadily lighted. If you are using an 8411 telephone, then button 10 on the telephone should be steadily lighted. If this is not the case, refer to the product’s troubleshooting documentation to troubleshoot this component.

The message “Password table not found” is displayed, and PC Console will not launch.	PC Console is unable to locate a password table in the System database.	Restore a backup copy of the System database. By default, the System database should be located at pccon2\admin\pccadmin.mdb. The default location of its backup file is pccon2\backup\pccadmin.mdb. If a backup copy is not available, reinstall the PC Console software, being certain to save the old files to a backup directory. This will create a new System database. Then restore all database files from the pccon2\backup\ directory into the new PC Console directory (overwriting the newly created database files). This will restore your previously saved database information. The files you must restore are listed below. *Restore to the pccon2\admin\ directory:* pcclang2.mdb *Restore to the pccon2\direc\ directory:* all directory database files. By default, these are labeled dir1.md, dir2.md, dir3.md, and/or dir4.md; with each having a corresponding *.cdx file and *.dbf file that must be restored as well. Keep in mind, however, that your administrator may use a different naming convention to identify the various database files.

The message “Password file not found” is displayed, and PC Console will not launch, however the System database has not actually been moved or deleted.	The System database has become corrupted.	**If Microsoft Access 2.0 or later is available to you:** Launch Microsoft Access, then open the System database. By default, it is located at pccon2\admin\pccadmin.mdb. Double click on the Password table to open that table. One-by-one, delete all entries in the password column. Do *not* attempt to type the new passwords directly into any field in this column. Exit Microsoft Access. Double-click on the **Console Administration** icon. Enter the usual system name, but leave the password field blank. Click on the Attendant Management folder, then readminister passwords for all named administrators, including that of the system. **If Microsoft Access 2.0 or later is not available to you:** Restore a backup copy of the System database. By default, it is located at pccon2\admin\pccadmin.mdb. The default location of its backup is pccon2\backup\pccadmin.mdb. If a backup copy is not available, reinstall the PC Console software, being certain to save the old files to a backup directory. This will create a new System database. Then restore the following database files from the pccon2\backup\ directory into the new PC Console directory (overwriting the newly created database files). This will restore your previously saved database information. The files you must restore are listed below. *Restore to the pccon2\admin\ directory:* pcclang2.mdb *Restore to the pccon2\direc\ directory:* all directory database files. By default, these are labeled dir1.md, dir2.md, dir3.md, and/or dir4.md; with each having a corresponding *.cdx file and *.dbf file that must be restored as well. Keep in mind, however, that your administrator may use a different naming convention to identify the various database files. Readminister all attendant profiles and associated passwords, all button labels, and all system parameters.

The error message that begins with “Not current version” is displayed and PC Console shuts down.	The indicated file is out of date and must be replaced with the current version.	Reinstall the PC Console software. This will create the required file. You will then need to copy all of the database files from the pccon2\backup\ directory into the new PC Console directory (overwriting the newly created database files); to restore your previously saved database information. The files you must restore are listed below. *Restore to the pccon2\admin\ directory:* pccadmin.mdb and pcclang2.mdb *Restore to the pccon2\direc\ directory:* all directory database files. By default, these are labeled dir1.md, dir2.md, dir3.md, and/or dir4.md; with each having a corresponding *.cdx file and *.dbf file that must be restored as well. Keep in mind, however, that your administrator may use a different naming convention to identify the various database files.
The error message that begins with “System file not found:” is displayed when you launch PC Console.	The indicated file is missing and must be restored.	Locate and restore a backup copy of the missing file. The default location of the PC Console files is pccon2. If a backup copy is not available, reinstall the PC Console software. This will create the missing file. You will then need to copy all of the database files from the pccon2\backup\ directory into the new PC Console directory (overwriting the newly created database files); to restore your previously saved database information. The files you must restore are listed below. *Restore to the pccon2\admin\ directory:* pccadmin.mdb and pcclang2.mdb *Restore to the pccon2\direc\ directory:* all directory database files. By default, these are labeled dir1.md, dir2.md, dir3.md, and/or dir4.md; with each having a corresponding *.cdx file and *.dbf file that must be restored as well. Keep in mind, however, that your administrator may use a different naming convention to identify the various database files.

An error message indicates “Server not found. Using local file.”	PC Console is unable to locate the software or database files that reside on your LAN server. The connection to the server may be broken, or the server itself may be down. PC Console is going to attempt to switch to the software and database files that reside on your hard drive to allow you to continue placing and receiving calls.	PC Console will continue to function normally, using your local copy of the database and other information. However, you need to determine whether the LAN server is down. If the LAN server is *not* down, double-check your installation configuration, and verify that all required connections are correctly made. (Refer to the configuration instructions and options detailed in Chapter 1, “Installation.”) If the LAN server *is* down, bring it back online, then exit and relaunch the PC Console application to again use the LAN database information that all operators can share.
An error message indicates “Corrupted database: (file name). Using local file.”	PC Console has found a corrupt database file on your LAN server, and will attempt to locate and switch to the equivalent database file on your hard drive.	PC Console will continue to function normally, using your local copy of the database and other information. Restore a backup copy of the corrupted PC Directory database to the LAN. Once the LAN copy of the database has been restored, you must bring it back online. Exit, then relaunch the PC Console application to again use the LAN database information that all operators can share.
An error message indicates “Server not found. File not found: (file name).”	PC Console was unable to locate the software or database files that reside on your LAN server. It next attempted, and failed, to locate replacement files on your hard drive. The connection to the server may be broken, or the server itself may be down. In addition, a local copy of the PC Console files are not available on your hard drive.	If the LAN server is *not* down, double-check your installation configuration, and verify that all required connections are correctly made. (Refer to the configuration instructions and options detailed in Chapter 1, “Installation.”) If the LAN server *is* down, bring it back online, then exit and relaunch the PC Console application to again use the LAN database information that all operators can share. Also consider installing a copy of PC Console on your local hard drive, so that it can continue to function in the event of a LAN failure.

An error message indicates "Corrupted database." When you click on OK to clear the message and return to the PC Console application, all screens are displayed in English, regardless of how they were previously administered.	The Language database has become corrupted.	Restore a backup copy of the Language database. By default, the Language database should be located at pccon2\admin\pcclang2.mdb. The default location of its backup file is pccon2\backup\pcclang2.mdb. If a backup copy is not available, reinstall the PC Console software. This will create a new database containing the standard languages. You will need to recreate any custom languages required within your environment. You will also need to copy all other database files from the pccon2\backup\ directory into the new PC Console directory (overwriting the newly created database files); to restore your previously saved database information. The files you must restore are listed below. *Restore to the pccon2\admin\ directory:* pccadmin.mdb *Restore to the pccon2\direc\ directory:* all directory database files. By default, these are labeled dir1.md, dir2.md, dir3.md, and/or dir4.md; with each having a corresponding *.cdx file and *.dbf file that must be restored as well. Keep in mind, however, that your administrator may use a different naming convention to identify the various database files.

Troubleshooting General Usage Problems

Symptom	Probable Cause	Recommended Solution
Double-clicking on the PC Console icon has no effect.	PC Console is already running. It may be minimized or running in the background.	Switch to the running PC Console application. You can either: ■ Hold down **ALT** and press the **TAB** key until you locate PC Console. Then release the **ALT** key ■ Hold down **CTRL** and press the **ESC** key to open a Task List on the screen. Highlight the PC Console application on this list and click **Switch To**.
The system password is unavailable, lost, or forgotten; and PC Console is not running.		Locate and open the initialization file for PC Console. You use Notepad or another text processing program to do so. The default name and location of this file is pccon2\pccon.ini. A section named [System] is listed at the top of the file. Within that section, locate the line that begins: SystemUserName = Delete the entry after the = sign. When you relaunch PC Console, you will be required to define a new system name and password. A backdoor is also available from the TSC or ITAC. Refer to “Product Support” in the “About This Document” section for contact information.
The user password is unavailable, lost, or forgotten.		The system administrator must assign a new password for the user in the Attendant Management folder of the System Administration window.
You can only see about 75% of the PC Console screen.	The Super VGA large font is installed on your PC monitor.	Replace the monitor, adhering to the minimum requirements specified in Chapter 1, “Installation.” Set the display to 800 x 600 pixels, and specify a small font and 256 colors in the associated display settings. Refer to the User’s Guide that accompanied your PC for step-by-step instructions.
The PC Console screens are skewed, or otherwise improperly displayed.	Your computer’s pixel setting is incompatible with the PC Console software.	Set the display to 800 x 600 pixels, and specify a small font and 256 colors in the associated display settings. Refer to the User’s Guide that accompanied your PC for step-by-step instructions.

PC Console is not responding quickly to your commands.	If you are running Windows 3.x, it may be overloaded, or information may be scattered, and therefore difficult to locate on your hard drive. If PC Console is using information stored on a LAN, this may indicate that the LAN is overloaded. If so, contact your help desk or system administrator to evaluate and troubleshoot the LAN.	Exit the PC Console application. Close all other applications, and exit Windows to free up all memory resources. If possible, correct any problems that exist on the hard drive, including locating and fixing any bad sectors or lost clusters. Depending upon your PC's configuration, you may be able to use the following DOS commands to clean up your hard drive: **defrag**, **optimize**, **scandisk**, and **chkdsk /f**. For additional information, refer to the Microsoft MS-DOS User's guide. When you are finished, relaunch Windows, relaunch PC Console, and run only those applications that are actually necessary in your environment.
Clicking on the **Help** button or selecting Help from the menu does not open the Help file.	The Help file was deleted.	Restore a backup copy of all Help files. If a backup copy is not available, reinstall the PC Console software. This will create a new Help file. You will then need to copy all of the database files from the pccon2\backup\ directory into the new PC Console directory (overwriting the newly created database files); to restore your previously saved database information. The files you must restore are listed below. *Restore to the pccon2\admin\ directory:* pccadmin.mdb and pcclang2.mdb *Restore to the pccon2\direc\ directory:* all directory database files. By default, these are labeled dir1.md, dir2.md, dir3.md, and/or dir4.md; with each having a corresponding *.cdx file and *.dbf file that must be restored as well. Keep in mind, however, that your administrator may use a different naming convention to identify the various database files.

The PC Console Directory upload appears to stall part-way through the process. Except for a visible **Cancel** button, you cannot see any indication that it is actively updating.	This may be a switch administration problem. At least one record in the Integrated Directory (for example, a Trunk Select Group) may be causing the switch to repeat itself when the **Next** button is selected. As a result, PC Console may be continually looping through the same record. Wait for five minutes to verify that this is, in fact, a switch administration problem. (It may instead be that the system is polling multiple ports, at a rate of 100 records per minute. If this is the case, there is an obvious slowdown, but you should see activity on your screen within a few minutes.)	If the problem persists, it requires the following multi-step solution: Step 1: Click the **Cancel** button to cancel the upload process. Then exit PC Console Administration. Step 2: Launch PC Console Operations, click the **PC Directory** button, then select **Search by Last Name**. This will access all of the names in that PC Directory. Step 3: Locate the last record in that PC Directory, and write down the name associated with that record. Step 4: Click the **Integrated Directory** feature button. Type the first few letters of the name identified in the previous step. Press the **Next** button repeatedly, until you find the name entry that is identical to the one you identified in Step 3. Step 5: Press the **Next** button one more time. This is the record that is causing the problem. Exit PC Console Operations. Step 6: Modify the Integrated Directory database, at the switch, to add an asterisk at the beginning of the problem name you identified in the previous step. Save the modified name. Step 7: At PC Console, launch PC Console Administration and begin the upload process again. Upload will bypass the problem name entry, since that modified name no long appears as part of the Integrated Directory database. Step 8: Once the upload process is complete, you can go back into the Integrated Directory database, at the switch, to remove the asterisk you added in Step 6. If you remove the asterisk, however, you will experience the same difficulty with this record, whenever you perform subsequent uploads to this PC Console directory.

A PC Directory was populated, but now appears empty.	The PC Directory database was deleted.	Restore a backup copy of the missing PC Directory database. By default, the PC Directory database should be located at pccon2\direc. If a backup copy is not available, you will need to recreate the missing database. If the missing database is dir1.md, you will need to reinstall the PC Console software to create the required database structure. You will also need to copy all other database files from the pccon2\backup\ directory into the new PC Console directory (overwriting the newly created database files); to restore your previously saved database information. The files you must restore are listed below. *Restore to the pccon2\admin\ directory:* pccadmin.mdb and pcclang2.mdb *Restore to the pccon2\direc\ directory:* all directory database files. By default, these are labeled dir1.md, dir2.md, dir3.md, and/or dir4.md; with each having a corresponding *.cdx file and *.dbf file that must be restored as well. Keep in mind, however, that your administrator may use a different naming convention to identify the various database files.
The PC Directory will not upload. An error message indicates “Integrated Directory not administered,” or “Next not administered.”	The switch or PC Console has not been programmed with the Integrated Directory feature.	Verify that the Integrated Directory feature has been assigned to the same feature button on PC Console as it was on the switch, during the administration of that switch. Also verify that the Next and Call display buttons are assigned to the same positions on PC Console as they are on the switch.

PC Console does not respond to any switch-related activity. For example, call handling and feature buttons are not functioning.	The COM port is not administered correctly.	Verify that the COM port connection to the PassageWay Adapter, 8411 telephone, or CallMaster VI telephone is consistent with the port identified in the System Parameters folder of the System Administration window. If it is not, either reconfigure the hardware, or change the software settings to point to the serial port actually connected to the PassageWay Adapter, 8411 telephone, or CallMaster VI telephone. Exit, then relaunch, PC Console to effectuate this change. Verify that the application is communicating with the PassageWay Adapter, 8411 telephone, or CallMaster VI telephone. If you are using a PassageWay Adapter, its green LED should be steadily lighted. If you are using an 8411 telephone, then button 10 on the telephone should be steadily lighted. If this is not the case, refer to the product's troubleshooting documentation to troubleshoot this component. Verify that the port, on the switch side, is properly administered as an attendant console.
PC Console intermittently ignores incoming calls or loses messages from the PassageWay Adapter, 8411 telephone, or CallMaster VI telephone.	The PC on which PC Console is running may not meet the minimum configuration requirements. Consequently, it cannot adequately monitor the connection to the PassageWay Adapter, 8411 telephone, or CallMaster VI telephone.	Verify that the PC meets the minimum configuration requirements. (These are detailed in Chapter 1, "Installation.") If it does not, upgrade or replace the PC. Verify that the COM port to which the PassageWay Adapter. 8411 telephone, or CallMaster VI telephone is physically connected is consistent with the port identified in the System Parameters folder of the System Administration window. If it is not, either reconfigure the hardware, or change the software settings to point to the serial port actually connected to the PassageWay Adapter, 8411 telephone, or CallMaster VI telephone. Exit, then relaunch, PC Console to effectuate this change. Verify that no other application is allowed to vie for the COM port used by PC Console. This could include any modem or fax application, TAPI software, secondary PassageWay application, etc. If any application attempts to use the same COM port as PC Console, this will interrupt communication between PC Console and the PassageWay Adapter, 8411 telephone, or CallMaster VI telephone.

PC Console consistently ignores incoming calls.	One or more features buttons are inappropriately enabled.	Verify PC Console is in the appropriate Day or Night setting for your environment. Verify that the Position Busy feature is not activated.
The feature buttons, Trunk Group buttons, and/or Hundreds Group buttons either do not work, or activate the wrong features.	The PC Console button labels do not match the functions administered at the switch.	Re-administer the switch and/or PC Console, or replace the button labels so that all elements of the administration process are consistent.
PC Console cannot make outgoing calls (except through the Integrated Directory, if administered).	The PC is not synchronized with the PassageWay Adapter, 8411 telephone, or CallMaster VI telephone.	Reboot the PC. While the PC is rebooting, disconnect and immediately reconnect either end of the cable between the PC and the PassageWay Adapter, 8411 telephone, or CallMaster VI telephone. This reconnection will force the two components to resynchronize their signals.
The Transfer, Hold, Release, and Conference icons are never displayed when outgoing calls are made over a particular trunk group. The only icon that is displayed is the Cancel icon.	The trunk group has been administered, at the switch, to *not* send signaling information to the console.	At the switch, re-administer the affected trunk group, and change the Outgoing Display setting to “y”es.
Status lamps that are not connected to any stations are lighted.	Status lamps may be associated with stations administered without hardware (AWOH) translations.	At the switch, determine whether the status lamps are associated with stations administered without hardware (AWOH) translations. Refer to the section in this chapter entitled “Troubleshooting Switch Problems,” and follow the offered solutions to isolate other possible causes of the problem.

Troubleshooting Switch Problems

Each system site should have a well-defined policy for collecting and responding to system alarms and user-generated trouble reports. Alarms that are generated by the system produce visible signals at the console, at selected telephones, and at the system equipment cabinet.

If the system has a link to a remote maintenance site, your system alarms will be sent to the remote site automatically.

If your system does not have a link to a remote maintenance site, then your system-generated alarms must be reported immediately to your System Manager. The System Manager is responsible for clearing the alarms, or for calling the designated maintenance organization to do so.

Console Alarm Indicators

Your console has built-in alarm lamps that indicate major and minor troubles on the switch. The feature buttons on the console can also be administered as alarm indicators to identify more specific problem conditions.

Alarm and Alarm Reported Indicators

Two alarm indicators appear on your console in the lower right corner. They are labeled Alarm and Alarm Reported. The alarm indicators are displayed only when a system problem is detected, and are automatically removed when the trouble is cleared.

If your system includes the remote maintenance option, the **Alarm Reported** indicator is displayed to indicate that the system has alerted the maintenance organization. Once the maintenance organization has been notified, they will assume responsibility for clearing the problem.

If the **Alarm Reported** indicator is displayed for any extended length of time after the **Alarm** indicator appears, this means that the system is unable to notify the maintenance organization. You, as the attendant, must notify the System Manager of this unresolved alarm condition.

If your system does not have the remote maintenance option, the **Alarm Reported** indicator will *not* appear on your display in the event of an alarm condition. In this case, you must notify the System Manager that the alarm condition exists.

Optional Alarm Lamps

The **Alarm** indicator does not distinguish between major and minor alarms. If this information is pertinent, a **Major Alarm** feature button should be administered on your console. This feature button will be displayed in white when a major alarm problem exists.

If the **Alarm** indicator is displayed, and the **Major Alarm** feature button is displayed in white, this indicates a major alarm. If only the **Alarm** indicator is displayed, this indicates a minor alarm.

Other feature buttons can be administered as trouble indicators for links between the system and peripheral support equipment, or to indicate problem at other sites. A **Link Failure** feature button is displayed in white to indicate major, minor, and warning alarms. (In systems with the Hospitality Services package, a **PMS Link Failure** feature button is displayed in white to indicate trouble in the link between the system and the customer-supplied Property Management System.)

You can cause white **Major Alarm** feature button to go gray by clicking that button. If the trouble is cleared before system maintenance detects it again, the feature button will remain gray.

Feature buttons administered for the Facility Busy Indication feature remain white as long as the links are active, but go gray if a link fails.

The system does not report link failures to the remote maintenance organization. You must notify the System Manager immediately of any indication of link trouble.

Four feature buttons can be administered to function as hardware alarm indicators for users associated with system maintenance, or for users who monitor system performance. A **PMS Printer Alarm** feature button is displayed in white when the PMS printer interface has a problem, and an **Auto Wakeup Alarm** feature button is displayed in white when the interface to the PMS Auto Wakeup printer has a problem. A **CDR 1 Failure-In** feature button is displayed in white when its interfaces to the primary SMDR output devices have a problem, and a **CDR 2 Failure-In** feature button is displayed in white when its interfaces to the secondary SMDR output devices have a problem.

The Features You Can Use to Troubleshoot Problems at the Switch

You can use the following features to perform simple trouble isolation and analysis of problems at the switch.

- **Automatic Circuit Assurance** — Used for monitoring possible trunk failures.
- **Busy Verification of Telephones and Trunks** — Used for placing test calls.
- **DCS Busy Verification of Telephones and Remote Trunks** — Used for placing test calls to remote telephones and trunks on the DCS link.
- **Trunk Group Busy/Warning Indicators to Attendant** — Used to provide an indication of trunk usage.
- **Trunk Identification** — Used to specifically identify the trunk where a problem is occurring.

Automatic Circuit Assurance (ACA)

This feature helps the attendant to identify trunks that may be faulty. The system maintains a record of individual trunk activity, relative to short- and long-long time calls. The system automatically initiates a referral call when it detects a possible failure. The attendant group, or an individual attendant, can be assigned as the referral call destination.

A referral call will arrive on an available call bar. When you select that call bar, its display will identify the call as an ACA call, identify the trunk group access code and trunk group member number, and show the reason for referral — either a short- or long-holding time. This information remains on the call bar until you release the call. You can then use the Busy Verification of Telephones and Trunks feature to check the trunk.

The ACA feature provides better service through early detection of faulty trunks, and consequently, reduces out-of-service time. Some types of trunk failures cause people to shorten their calls. For example, an excessive number of short calls may indicate a noisy trunk. Similarly, a trunk that remains busy for an abnormally long time may be permanently busy due to a trunk fault. The ACA feature takes advantage of these characteristics to identify those trunks that may be defective.

The ACA must be enabled by the System Manager. Once this is done, a single attendant console (per system) can be assigned an **ACA** feature button to activate and deactivate the ACA referrals. ACA should remain activated at all times, if it is enabled at your system.

To activate ACA referrals:

1. Click the **ACA** feature button.
   - The **ACA** feature button is displayed in white.
   - ACA is activated.

To deactivate ACA referrals:

1. Click the **ACA** feature button.
   - The **ACA** feature button is displayed in gray.
   - ACA is deactivated.

Busy Verification of Telephones and Trunks

This feature allows the attendant to place test calls to trunks, telephones, and hunt groups (DDC and UCD groups). Busy Verification provides an easy method of checking the condition of these facilities. When the feature is activated, you can distinguish between a telephone or trunk that is truly busy, and one that only appears busy because of some trouble condition, or because it was administered without hardware.

The result of a busy verification test may be a display, a tone, or a conversation with the called facility.

In the following procedures, a successful verification tells you that the facility is probably working correctly; a failure tells you that the facility should be reported for maintenance.

To busy verify a telephone:

1. Click the **Busy Verify** feature button.
   - The **Busy Verify** feature button is displayed in white.
2. Click a Call icon , or highlight an empty call bar and press **F6**.
   - A Release icon is displayed on the call bar.
   - You hear dial tone.
   - The background of the call bar changes to white.
   - The call bar assigns a letter identification (such as c=) to the call.
3. Using your keyboard, telephone keypad, or Hundreds Group button and Busy Lamp Field, dial the desired extension.
   - The call bar displays the called party's telephone number.
   - The number is dialed.
   - The Transfer , Hold , Release and Conference icons are displayed on the call bar that is associated with this call.
     - If the call bar shows "INVALID," and intercept tone is heard, this indicates an invalid extension. Click the Release icon or press **F8** to release from the call, then try again.
     - If the call bar shows "TERMINATED," and ringback tone is heard, this indicates the called extension is idle and ringing. Verification was successful. Talk to the called party, or click the Release icon or press **F8** to release from the call.
     - If the call bar shows "BRIDGED," this indicates your call was bridged onto an active call, and initial warning tone was applied to the call. Verification was successful. Talk to the bridged parties, or click the Release icon or press **F8** to release from the call.

— If the call bar shows “OUT OF SERVICE” and reorder tone is heard, this indicates either a trouble condition at the telephone, or a telephone that was administered without hardware (not a trouble condition). Click the Release icon or press **F8** to release from the call, then report the out-of-service condition to the appropriate personnel.

To busy verify a hunt group:

1. Click the **Busy Verify** feature button.
   - The **Busy Verify** feature button is displayed in white.
2. Click a Call icon , or highlight an empty call bar and press **F6**.
   - A Release icon is displayed on the call bar.
   - You hear dial tone.
   - The background of the call bar changes to white.
   - The call bar assigns a letter identification (such as c=) to the call.
3. Using your keyboard, telephone keypad, Hundreds Group button and Busy Lamp Field, dial the desired trunk group extension.
   - The call bar displays the trunk group extension.
   - The number is dialed.
   - The Transfer , Hold , Release and Conference icons are displayed on the call bar that is associated with this call.
     — If the call bar shows “INVALID,” and intercept tone is heard, this indicates an invalid extension. Click the Release icon or press **F8** to release from the call, then try again.
     — If the call bar shows “TERMINATED,” and ringback tone is heard, this indicates the called extension is idle and ringing. Verification was successful. Talk to the called party, or click the Release icon or press **F8** to release from the call.
     — If the call bar shows “ALL MADE BUSY” and reorder tone is heard, this indicates that all hunt groups members have activated the Make Busy feature. Click the Release icon or press **F8** to release from the call, then try again later.

— If the call bar shows “DENIED” and reorder tone is heard, this indicates that all hunt group members are active on a call.

  Click the Release icon or press **F8** to release from the call, then try again later.

— If the call bar shows “OUT OF SERVICE” and reorder tone is heard, this indicates a trouble condition at the hunt group.

  Click the Release icon or press **F8** to release from the call, then report the out-of-service condition to the appropriate personnel.

To busy verify a trunk:

1. Click the **Busy Verify** feature button.
   - The **Busy Verify** feature button is displayed in white.
2. Click a Call icon , or highlight an empty call bar and press **F6**.
   - A Release icon is displayed on the call bar.
   - You hear dial tone.
   - The background of the call bar changes to white.
   - The call bar assigns a letter identification (such as c=) to the call.
3. Using your keyboard or the telephone keypad, dial the desired trunk access code, or click the desired Trunk Group button.
   - The call bar displays the number being dialed.
   - The number is dialed.
   - The Transfer , Hold , Release and Conference icons are displayed on the call bar that is associated with this call.
   - If dial tone is heard, go to Step 4.

     — If the call bar shows “DENIED,” and intercept tone is heard, this indicates an invalid trunk access code or Personal Central Office Line (PCOL) trunk group. Click the Release icon or press **F8** to release from the call, then try again.

4. Use your keyboard, telephone keypad, or Hundreds Group button and Busy Lamp Field, to dial the desired trunk group member number.
   - If the call bar shows “INVALID,” and intercept tone is heard, this indicates an invalid group member number. Click the Release icon or press **F8** to release from the call, then try again.
   - If the call bar shows “VERIFIED,” and confirmation tone is heard, this indicates an idle one-way incoming trunk. Verification was successful. Click the Release icon or press **F8** to release from the call.
   - If ringback is heard, this indicates an idle automatic tie trunk or idle release link trunk**.** Verification was successful. Click the Release icon or press **F8** to release from the call.
   - If dial tone is heard, this indicates the trunk is idle and can be used to place a test call. Verification was successful. Place a test call, or click the Release icon or press **F8** to release from the call.
   - If the call bar shows “BRIDGED,” this indicates you have been bridged onto an active call, and initial warning tone has been applied to the call. Verification was successful. Talk to the bridged parties, or click the Release icon or press **F8** to release from the call.
   - If the call bar shows “OUT OF SERVICE,” and reorder tone is heard, this indicates a trouble condition exists on the trunk. Click the Release icon or press **F8** to release from the call, then report the out-of-service condition to the appropriate personnel.

DCS Busy Verification of Telephones and Remote Trunks

This feature allows the attendant to place test calls to trunks and telephones at a remote location within the same DCS network. Busy Verification provides an easy way to check the condition of these facilities. When the feature is activated, you can distinguish between a telephone or trunk that is truly busy, and one that only appears busy because of some trouble condition.

The result of a busy verification test may be an intercept tone, a display, or a conversation with the called facility. In the following procedures, a successful verification tells you that the facility is probably working correctly; a failure tells you that the facility should be reported for maintenance.

To busy verify a telephone in a DCS environment:

1. Click the **Busy Verify** feature button.
   - The **Busy Verify** feature button is displayed in white.
2. Click a Call icon , or highlight an empty call bar and press **F6**.
   - A Release icon is displayed on the call bar.
   - You hear dial tone.
   - The background of the call bar changes to white.
   - The call bar assigns a letter identification (such as c=) to the call.
3. Using your keyboard, telephone keypad, or Hundreds Group button and Busy Lamp Field, dial the desired extension.
   - The call bar displays the number being dialed.
   - The number is dialed.
   - The Transfer , Hold , Release and Conference icons are displayed on the call bar that is associated with this call.
     - If intercept tone is heard, this indicates an invalid extension. Click the Release icon or press **F8** to release from the call, then try again.
     - If the call bar shows “DENIED,” and reorder tone is heard, this indicates a trouble condition that exists on the DCS link. Click the Release icon or press **F8** to release from the call, then report the out-of-service condition to the appropriate personnel.
     - If ringback tone is heard, this indicates that the called extension is idle and ringing. Verification was successful. Talk to the called party, or click the Release icon or press **F8** to release from the call.
     - If the call is bridged onto an active call, and initial warning tone was applied to the call, this indicates verification was successful. Talk to the bridged parties, or click the Release icon or press **F8** to release from the call.

— If reorder tone is heard, this indicates either a trouble condition at the telephone, or a terminal that was administered without hardware (not an error condition). Click the Release icon or press **F8** to release from the call, then report the out-of-service condition to the appropriate personnel.

To busy verify a remote trunk in a DCS environment (simple verification method):

1. Click the **Busy Verify** feature button.
   - The **Busy Verify** feature button is displayed in white.
2. Click a Call icon , or highlight an empty call bar and press **F6**.
   - A Release icon is displayed on the call bar.
   - You hear dial tone.
   - The background of the call bar changes to white.
   - The call bar assigns a letter identification (such as c=) to the call.
3. Click the desired Trunk Group button.
   - The call bar displays the number being dialed.
   - The number is dialed.
   - The Transfer , Hold , Release and Conference icons are displayed on the call bar that is associated with this call.
   - If dial tone is heard, go to Step 4.

     — If intercept tone is heard, this indicates an invalid trunk access code or Personal Central Office Line (PCOL) trunk group.

     Click the Release icon or press **F8** to release from the call, then try again.
4. Using your keyboard, telephone keypad, or Hundreds Group button and Busy Lamp Field, dial the desired trunk group member number.

   — If the call bar shows “DENIED,” and reorder tone is heard, this indicates a trouble condition that exists on the DCS link. Click the Release icon or press **F8** to release from the call, then report the out-of-service condition to the appropriate personnel.

— If confirmation tone is heard, this indicates an idle one-way incoming trunk. Verification was successful. Click the Release icon or press **F8** to release from the call.

— If ringback is heard, this indicates the trunk is an idle automatic tie trunk or release link trunk. Verification was successful. Click the Release icon or press **F8** to release from the call.

— If dial tone is heard, this indicates the trunk is idle and can be used to place a test call. Verification was successful. Place a test call, or click the Release icon or press **F8** to release from the call.

— If the call is bridged onto an active call, and initial warning tone was applied to the call, this indicates verification was successful. Talk to the bridged parties, or click the Release icon or press **F8** to release from the call.

— If reorder tone is heard, this indicates a trouble condition on the trunk. Click the Release icon or press **F8** to release from the call, then report the out-of-service condition to the appropriate personnel.

To busy verify a remote trunk in a DCS environment (two-button push verification method):

1. Click the **Busy Verify** feature button.
   - The **Busy Verify** feature button is displayed in white.
2. Click a Call icon , or highlight an empty call bar and press **F6**.
   - A Release icon is displayed on the call bar.
   - You hear dial tone.
   - The background of the call bar changes to white.
   - The call bar assigns a letter identification (such as c=) to the call.
3. Use your keyboard or the telephone keypad to dial the desired trunk access code.
   - The call bar displays the number being dialed.
   - The number is dialed.
4. Click the **Busy Verify** feature button.
   - The **Busy Verify** feature button is displayed in white.

- If dial tone is heard, go to Step 5.
  - — If intercept tone is heard, this indicates an invalid trunk access code or Personal Central Office Line (PCOL) trunk group.

    Click the Release icon or press **F8** to release from the call, then try again.

5. Use your keyboard or the telephone keypad to dial the desired trunk access member number.
   - — If the call bar shows “DENIED,” and intercept tone is heard, this indicates an invalid trunk access code. Click the Release icon or press **F8** to release from the call, then try again.
   - — If the call bar shows “DENIED,” and reorder tone is heard, this indicates a trouble condition that exists on the DCS link. Click the Release icon or press **F8** to release from the call, then report the out-of-service condition to the appropriate personnel.
6. Use your keyboard or the telephone keypad to dial a trunk access member number pair.
   - — If confirmation tone is heard, this indicates an idle one-way incoming trunk. Verification was successful. Click the Release icon or press **F8** to release from the call.
   - — If ringback is heard, this indicates the trunk is an idle automatic tie trunk or release link trunk. Verification was successful.

     Click the Release icon or press **F8** to release from the call.
   - — If dial tone is heard, this indicates the trunk is idle and can be used to place a test call. Verification was successful. Place a test call, or click the Release icon or press **F8** to release from the call.
   - — If the call is bridged onto an active call, and initial warning tone was applied to the call, this indicates verification was successful. Talk to the bridged parties, or click the Release icon or press **F8** to release from the call.
   - — If reorder tone is heard, this indicates a trouble condition on the trunk. Click the Release icon or press **F8** to release from the call, then report the out-of-service condition to the appropriate personnel.

Trunk Group Busy/Warning Indicators to Attendant

This feature provides the attendant with a visual indication of the trunk group status for each of the Trunk Group buttons displayed on the console.

- **Gray** — Indicates normal. Less than a preset number of trunks in the associated group are busy.
- **Pink** — Indicates that a preset number of trunks in the associated trunk group are busy.
- **Red** — Indicates that *all* trunks in the associated trunk group are busy.

Feature buttons can also be administered as Local Trunk Group buttons and Remote Trunk Group buttons; for a total of up to twelve more Trunk Group buttons. Each of these feature buttons indicates the status of its associated trunk group; again by changing to the appropriate display color.

Observe these indicators to stay alert to unusual or suspicious conditions, such as groups that are always busy, or those that are never busy. Knowing what hours of the day are typically the most- and least-busy will also prove useful in analyzing possible trunk problems. For example, if a trunk group remains red for a particular group during a period that is not usually busy, it may be that one or more trunks are out-of-service, but appear to be busy. Another indicator of a possible problem situation is the Trunk Group button whose color never seems to change. When you notice an unusual situation, use Busy Verification to test the trunk you suspect is faulty.

NOTE:
DCS is required for the busy and warning indicators associated with Remote Trunk Group buttons, but the buttons themselves will work without DCS.

Trunk Identification

When a telephone user in the system experiences noise or poor transmission on a trunk, the user can conference the attendant into the call. The attendant can then use the Trunk Identification feature to identify the specific trunk that is faulty, then report it for maintenance. The Trunk Identification feature can also be used on trunk calls originated by, or received by, the attendant.

The trunk identification (access code and group member number) will be displayed when you click the **Identify Trunk** feature button during a call. If two trunks are used for a call, the identification of the last trunk added to the call is displayed. Trunk Identification cannot be displayed if more than two trunks are on a call.

The following procedure assumes that you are on an active call; however the **Identify Trunk** feature button can be used while a trunk is being accessed, while digits are being outpulsed on a trunk, or during the intervals that occur between digit outpulsing.

To identify the specific trunk being used on a call:

1. Click the **Identify Trunk** feature button.
   - The trunk access code and trunk group member number are displayed on the call bar.
2. Report the trunk problem and all available identification information to the System Manager or other appropriate maintenance personnel.

Recovering from a Power Failure

When a power failure occurs, any calls that were active or on hold are automatically terminated. The console itself will also lose power and need to be restored. In addition, some switch features may need to be readministered.

To recover from a power failure:

1. Bring the PC and PC Console back online. If you experience difficulty doing so, read and follow the instructions in the next section, "Emergency Procedures."
2. If your environment requires them, check and/or readminister the following features. You will find complete instructions in Chapter 6, "Switch Features."

   Locate each feature that is relevant to your environment, then follow the step-by-step procedures provided in Chapter 6 to restore your system's normal operating values.

   - **Attendant Control of Trunk Group Access**
     For each trunk group, loudspeaker paging zone, or code calling zone to which PC Console must have access, follow the procedure "To activate attendant control of trunk group access."
   - **Call Forwarding All Calls**
     For each extension whose calls are to be forwarded to another extension in the system, follow the procedure "To activate Call Forwarding All Calls for a particular extension."
   - **Controlled Restrictions**
     For each telephone or group of telephones that were individually restricted (either outward-, total-, station-to-station, or termination-), reestablish the appropriate restriction level. Refer to the procedure "To activate a restriction."
   - **Night Service**
     If your system was set up to direct attendant group calls to a special console at night (or during other off-hours), you will need to reactivate this feature. Refer to the procedure "To activate Night Service."

Recovering from a PC Failure

If a power failure or hard drive crash should occur at the PC Console station, or if the PC itself should become inoperable, you will need to bring PC Console back online. You may also need to re-administer certain switch features. (Refer to the section entitled “Recovering From a Power Failure” for a list of those features.)

If you are unable to bring PC Console back online, read through the following information; then determine and follow the best course of action.

NOTE:
It is important to note that PC Console controls both the telephone to which it is attached and the PassageWay Adapter (if applicable). If PC Console itself is inoperable, all attached peripherals likewise become inoperable, and will remain so until the console is either restored or replaced.

Emergency recovery information:

- The PC Console position will continue to receive calls, despite its current condition. You must busy-out the port that is associated with PC Console, at the switch. If this is not possible, turn the attached telephone upside down and unplug the connector from the connection labeled “LINE” on the bottom of the telephone. This will force calls to the PC Console attendant to be redirected, according to the system administration coverage path.
- If a 302 Attendant Console (either 2- or 4-wire) is available, you can reconnect this console as a stop-gap measure. To do so, locate the wire that connects PC Console to the jack on the wall. Unplug this wire from the wall receptacle. Next, locate the wire on the 302 Attendant Console that connects the console to a wall jack, and plug that wire into the now-available receptacle. This will restore all normal console functionality, including the Direct Extension Selection display, if one is installed.
- If you want to restore the use of the telephone attached to PC Console, you can do so; provided that two jacks are available in the immediate vicinity, and that the second is already administered as a generic DCP port. Plug the telephone (normally attached to PC Console) into the second jack. It will now operate as a normal DCP telephone.

Glossary

Abbreviated Dialing
The switch feature that provides a mechanism for storing and recalling numbers used to place calls and activate features. This feature reduces the number of keystrokes required for dialing.

AD feature buttons
The administered Abbreviated Dialing feature buttons that allow one-button dialing of selected numbers or access to Abbreviated Dialing lists.

Administration Without Hardware (AWOH)
The switch feature that provides the ability to administer station forms without specifying a port location. Such stations are referred to as “phantoms” and do not generate alarms and errors when the station is translated but not yet installed.

Alarm Indicator
The indicator that appears on your screen in the lower right corner when a system problem is detected.

Alarm Reported Indicator
The indicator that appears on your screen in the lower right corner that indicates a detected system problem was reported to the maintenance organization.

Alerting Timer
The switch feature that terminates a held or unanswered call on a call bar when the call has not been answered within a preset length of time (usually about 40 seconds).

Attendant Auto-Manual Splitting
The feature that lets you temporarily disconnect from a caller, place a call to another party, and then connect the two parties together.

Attendant Call Waiting
The switch feature that allows a call extended from the console to a busy single-line telephone inside the system to wait at the called telephone.

Attendant Conference
The switch feature that allows the attendant to arrange a conference call with as many as five other conferees.

Attendant Control of Trunk Group Access
The switch feature that allows attendants to control access to as many as twelve trunk groups, loudspeaker paging zones, or code calling zones per console. Calls from system users to the trunk group under attendant control redirect to an attendant console.

Attendant Direct Trunk Group Selection
The switch feature that allows the attendant to select a trunk group for an outgoing call, loudspeaker paging zone, or code calling zone by clicking a Trunk Group button.

Attendant Display
The switch feature that shows call-related, personal service, and message information on the alphanumeric display of the attendant console.

Attendant Intrusion
The switch feature that enables an attendant to enter an existing call on either a digital or analog station to offer a new call or message to the called party.

Attendant Lockout
The switch feature that prevents the attendant from reentering a multi-party call held on the console unless recalled by a system user on the call.

Attendant Override of Diversion Features
The switch feature that allows you to bypass any diversion features invoked by and/or associated with a dialed extension.

Attendant Priority Queue
The switch feature used to handle incoming calls to the attendant group or to an individual attendant when the call cannot be immediately terminated to an attendant.

Attendant Recall
The switch feature that allows a system user on a 2-party call or a conference call held on the console to recall the attendant for assistance.

Attendant Serial Call
The switch feature that enables the attendant to transfer trunk calls that return to the same attendant position after the called party hangs up.

Auto Hold
The switch feature that, when enabled, automatically places an active call on hold when another call appearance button is selected.

Automatic Alternate Routing (AAR)
The switch feature that selects the most-preferred route (normally the most-direct route) for private network calls.

Automatic Answer
The feature that causes incoming calls to be answered automatically, without a mouse click or **F6** button press. This feature can be used only when you are using a headset connected to the console.

Automatic Circuit Assurance (ACA)
A switch feature used for monitoring possible trunk failures.

Automatic Route Selection (ARS)
The switch feature that selects the most-preferred route (normally the least-expensive route) for long-distance calls.

Auxiliary Work Mode
A mode in which agents are unable to receive ACD calls.

Busy Lamp Fields
The lamps associated with each Hundreds Group button that indicate the status of a group of extensions.

Busy Verification of Telephones and Trunks
A switch feature used for placing test calls.

call bar
The area near the bottom of the Console Operations screen that displays information about one phone call that you are currently handling.

Call Coverage
The switch feature that redirects unanswered internal and/or DID calls to an alternate answering position.

Call Detail Recording (CDR) Account Code Dialing
The switch feature that collects call details on selected incoming and outgoing trunk calls and creates call records using this information.

Call Forwarding All Calls
The switch feature that allows an attendant to activate and deactivate Call Forwarding All Calls for an extension in the system.

Call Handling area
The area near the bottom of the Console Operations screen that displays six “call bars,” each providing information about one phone call that you are currently handling.

Call Park
The switch feature that allows an incoming call to be put on hold at an extension, then retrieved from any telephone in the system.

Call Purpose Identifier
A one- or two-letter abbreviation that appears on the call bar to indicate a call was directed, redirected, or returned to the console through an interaction with a feature.

The general call purpose identifiers are:

- **co** — Controlled Outward Restriction Call — Indicates a call from an internal user was redirected to the attendant because the user attempted to make an outgoing call, but cannot due to Controlled Outward Restriction.
- **cs** — Controlled Station-to-Station Restriction Call — Indicates a call from an internal user was redirected to the attendant because the user attempted to make a station-to-station call, but could not due to Controlled Station-to-Station Restriction.
- **ct** — Controlled Termination Restriction Call — Indicates a call was redirected to the attendant because the calling party attempted to call a user who has Controlled Termination Restriction.
- **f** — Call Forwarding — Indicates a system user has forwarded all calls to the attendant.
- **ic** — Intercept Call — Indicates an incoming call has been redirected to the attendant due to Intercept Treatment.
- **ld** — DID LDN Call — Indicates that the incoming call is a Listed Directory Number (LDN) call on a Direct Inward Dialing (DID) trunk.
- **n** — Night Service — Indicates that night service is on and the call goes to the night service station.
- **na** — Night Service Attendant — Indicates that both the primary and secondary attendants were in night service and position busy mode when a call came in. The night service station attendant (the secondary) clicked **Position Busy** in order to take the call.
- **rc** — Recall Call — Indicates that a system user, active on a held call, is requesting attendant assistance.
- **rt** — Return Call — Indicates that an attendant-extended call was not answered within a preset time and has returned to the console.
- **sc** — Serial Call — Indicates that a system user has use of the line into the switch until all his/her calls are complete.
- **tc** — Trunk Control — Indicates that a system user tried to place an outgoing call, but Attendant Control of Trunk Group Access was active for that trunk group, and the call was therefore redirected to the console.

When the Call Coverage feature is active and the attendant is a covering user, the following call purpose identifiers are displayed:

- **b** — Busy — Indicates that the called user is active on a call, and has a temporary bridged appearance of the call.
- **B** — Busy — Indicates that the called user is active on a call, but does *not* have a temporary bridged appearance of the call.
- **d** — Don't Answer or Cover — Indicates that the user did not answer or was unavailable, or that the caller sent the call to cover. This also indicates that the called telephone has a temporary bridged appearance of the call.
- **s** — Send All Calls — Indicates that the called party is temporarily sending all calls to coverage.

Called Party Identification

The display that indicates who is being called. For calls to a system user, the display shows the digits as they are dialed. After the dialing is complete, the display shows the called party's name (if available) and extension number. On outgoing trunk calls the display shows the digits as they are dialed, followed by the name and trunk access code assigned to the trunk group being used.

Calling Party Identification

The display that indicates who is calling. When the call is from a system user, the display shows the caller's name or a unique identification administered for the telephone being used, along with the calling party's extension number. When the call is from outside the system, the display shows the trunk identification, such as **CHICAGO** and the trunk access code assigned to the trunk group used for the call.

Centralized Attendant Service (CAS)

The feature that allows system users served by separate switches at two or more locations to concentrate the attendant positions at one location. This location is called the CAS main. The other locations, typically without attendants, are called CAS branches.

Class of Restriction (COR)

The switch feature that defines multiple classes of call origination and termination privileges. Systems may have only a single COR, one with no restrictions, or multiple CORs to effect the desired restrictions.

Class of Restriction Identifiers

All system users have a Class of Restriction (COR) to define their calling privileges. The COR is a 2-digit number, followed by a 4-character identifier. The attendant must click the **COR** feature button to display a user's COR. The COR information can be obtained from your System Manager.

The COR identifiers are:

- **ORIG** — Origination restriction
- **OTWD** — Outward restriction
- **TOLL** — Toll restriction
- **CODE** — Code restriction
- **NONE** — No restriction

Class of Service (COS)

The switch feature that defines whether telephone users have access to the following features: Automatic Callback, Call Forwarding All Calls, Client Room, Console Permission, Data Privacy, Off-Hook Alert, and Priority Calling.

Clocked Manual Override Option

The Time-of-Day-Routing option that allows you to specify the day and time to override the scheduled Time-of-Day Routing plan. You can also specify a day and time for automatic deactivation, or manually deactivate Clocked Manual Override.

Code Calling Access

The switch feature that allows the attendant to page a called party with coded chime signals in up to nine areas (zones).

COM Port

The communications port on the back of the PC to which the telephone or PassageWay Adapter must be physically connected.

Companding

The option that determines how the system will digitize voice signals. Selecting Mu-Law permits the system to digitize voice signals according to the accepted Mu-Law standards. Selecting A-Law requires the system to digitize voice signals according to the accepted A-Law standards.

Console administration
The procedures that the System Administrator uses to define your environment. This includes identifying the users who are authorized to access the PC Console system, and specifying how the buttons are configured at the switch by configuring them the same way within the PC Console software

Console Alarm Indicators
The built-in alarm lamps that indicate major and minor troubles on the switch. Feature buttons on the console can also be administered as alarm indicators to identify more specific problem conditions.

Consult
The switch feature option that allows you to talk with the called party after you answer a redirected call.

Controlled Restrictions
The switch feature that allows the attendant to activate or deactivate the restrictions for individual telephones or groups of telephones (on a COR basis).

Coverage Callback
The feature option that allows you to leave a callback message for the called party after you answer the redirected call.

Direct Department Calling (DDC)
A switch feature that allows direct inward access to an answering group other than the attendant even if the system does not have the DID feature.

Direct Inward Dialing (DID)
The switch feature that connects calls from the public network directly to the dialed extension without assistance from the attendant.

Directory administration
The procedures that the System Administrator uses to define, and later identify, the database information required by PC Console to communicate with the switch.

display buttons
The administered buttons that access a display function. Click the button to perform the associated task. When the button is activated, it turns white. If it is deactivated, it turns gray. If the switch needs to communicate a problem to you, the button turns pink. The display buttons required on every PC Console are Normal, Next, and Return Call.

Distributed Communications Service (DCS)
A configuration of 2 to 20 private switches that are interconnected. These switches may be in different geographical locations.

Diversion features
Any features which, when activated, cause the call to alert to a point different from the dialed station.

Don't Split
The switch feature that temporarily disables Auto Start, and sends DTMF.

Emergency Access to the Attendant
The switch feature that provides for emergency calls to be placed to the attendant automatically by the system, or dialed by system users; and allows such calls to receive priority handling by the attendant.

Emergency feature button
The administered feature button that turns pink when an emergency call is placed to the attendant.

Facility Busy Indication
The switch feature that provides a visible indication of the active/busy status of a particular trunk group or extension.

Facility Test Call
The switch feature that allows authorized personnel to place test calls to specific trunks, touch-tone receivers, time slots, and system tones.

feature buttons
The administered buttons that access a switch feature. Click the button to perform the associated task. When the button is activated, it turns white. If it is deactivated, it turns gray. If the switch needs to communicate a problem to you, the button turns pink. The feature buttons required on every PC Console are Split, Hold, Forced Release, Position Busy, and Night Service.

Hundreds Group button
The administered button that allows you to access up to 100 extensions.

hunt groups
A group of extensions that are assigned the Station Hunting feature so that a call to a busy extension will reroute to an idle extension in the group.

Immediate Manual Override Option
The Time-of-Day-Routing option that immediately changes the active routing plan to a new plan.

Individual Attendant Access
The switch feature that allows users to access a specific attendant console by directly dialing the attendant's extension number.

Integrated Directory
The switch feature that enables the attendant to retrieve extension numbers from the system directory. PC Console can upload this to a special Upload File, which can then be used by the PhoneLine MasterDirectory software to create or refine directories for PC Console.

Inter-PBX Attendant Service (IAS)
The switch feature that allows attendant positions for more than one branch location to be concentrated at one central, or main, location.

ISDN-PRI
The switch feature that provides additional information to be displayed on the console.

LAN
A networking arrangement designed for a limited geographical area.

Language Database
The Microsoft Access database that contains standard, or possibly customized, language translations. Its default location is pccon2\admin\pcclang2.mdb.

Leave Word Calling
The switch feature that allows the attendant to leave messages for system users.

Local Trunk Group buttons
Administered feature buttons that allow the attendant access to local trunk groups on the system.

Loudspeaker Paging Access
The switch feature that allows the attendant to access loudspeaker paging equipment.

Loudspeaker Paging Access-Deluxe
The switch feature that allows attendants to access loudspeaker paging equipment, and park calls with the activation of only one feature.

Make Busy
The switch feature that temporarily removes the console from the hunt group.

Message Retrieval
The switch feature that allows you to retrieve messages for other system users.

Multiple Listed Directory Numbers
The switch feature that provides access, to the system, over a maximum of 50 listed directory numbers. Calls coming in to these numbers are routed to the attendant console to be extended to the requested person or department.

Network Access-Private
The switch feature that allows calls to be connected to networks such as Common Control Switching Arrangement (CCSA), Electronic Tandem Network (ETN), and Enhanced Private Switched Communications Service (EPSCS).

Network Access-Public
For outgoing calls to the public network, the ARS feature (if available) can be used to select the best route available at the time the call is placed. For manual route selection, dial access codes can be assigned to outgoing routes.

Night Service
The switch feature that directs all attendant group calls, for the principal and daytime attendant console, to a night console.

Night Service Disconnect Timer
The timer that determines how long an incoming call, without disconnect supervision, can go unanswered at a night service destination when the switch is in night service.

Night Station Service
The switch feature that redirects incoming attendant-seeking trunk calls to designated extensions whenever the system is placed in Night Service.

No Answer Timer
The Timing feature that increments a delay threshold count when a call to the attendant has not been answered within a preset length of time.

PC Directory Files
The database files that contain information about the people who may originate or receive calls through the switch connected to PC Console. By default, these files are located in pccon2\direc\.

PhoneLine MasterDirectory
The standalone software application that allows you to create and manage information in multiple directories.

Remote Hold
A feature used by CAS attendants that allows a call to be held at the branch location

remote maintenance site
A remote site to which system alarms are sent automatically.

Remote Trunk Group buttons
Administered feature buttons that allow the attendant access to remote trunk groups on the system.

Return Call Timeout
The Timing switch feature that sends a special ringing tone to the attendant when a transferred call has not been answered within a preset length of time, and has returned to the console.

Second Party Display
The area beneath the Call Handling bars that displays information about the called- or calling-party for the currently-active call.

Straightforward Outward Completion
The switch feature that allows the attendant to complete an outgoing trunk call for a telephone user, by selecting a trunk and dialing the outside number.

system alarms
Alarms that are generated by the system and produce visible signals at the console, at selected telephones, and at the system equipment cabinet.

System Database
The database that contains password information and any label information you have saved for each button on the PC Console screens. Its default location is pccon2\admin\pccadmin.mdb.

System Log File
The log of user and administrator activity within PC Console. This file identifies each person that has accessed a PC Console function. It also indicates what functional area was accessed, and provides an associated date and time stamp. Its default location is pccon2\admin\syslogin.txt.

Through Dialing
The switch feature that enables the attendant to select an outgoing trunk for a telephone user, release the call, and permits the user to dial the rest of the number.

Time-of-Day Routing
The switch feature that allows outgoing calls to be placed over the most economical route, based on the time of day and day of week.

Timed Reminder
The Timing feature that sends a special ringing tone to the attendant if a call that has been on hold at the console for longer than a preset maximum needs attention, or if an extended call not answered within a preset time period has returned to the console.

Trunk Answer From Any Station (TAAS)
A switch feature that allows a station user to answer calls that are normally directed to the attendant, by dialing an access code.

Trunk Group Busy/Warning Indicators to Attendant
The switch feature used to provide an indication of trunk usage.

Trunk Group buttons
The administered buttons that allow the attendant to select an outgoing trunk group. They can also be used to select a code-calling or loudspeaker paging zone.

Trunk Identification
The switch feature used to specifically identify the trunk where a problem is occurring.

Trunk-to-Trunk Transfer
The switch feature that allows the attendant to originate two outgoing trunk calls, and connect them together.

Uniform Call Distribution (UCD)
A switch feature that allows direct inward access to an answering group other than the attendant even if the system does not have the DID feature.

Upload File
This is the database file that receives information uploaded from the switch's Integrated Directory. Its default location is pccon2\direc\upload.md.

Visually Impaired Attendant Service (VIAS)
The service that provides voiced feedback to the visually impaired attendant.