28 AND 35 ANSWER-BACK UNIT

DISASSEMBLY AND REASSEMBLY

CONTENTS PAGE

1. GENERAL 1

2. DISASSEMBLY AND REASSEMBLY . . 1
COVER AND TERMINAL BLOCK . . . 1
MOTOR AND MOTOR MOUNTING BRACKET 2
FUSE HOLDER AND BRACKET 2
CAPACITOR 2
CODE DRUM 2
CONTACT BLOCK 2
ANSWER-BACK MECHANISM 3
MAIN SHAFT 3

1. GENERAL

1.01 Disassembly, as outlined in this section, covers a procedure for removing the principle components which make up the answer-back unit.

1.02 The technician should refer to the exploded views found in the appropriate parts literature for an illustration of the unit to be disassembled, for location and visual identification of parts, and detailed disassembly and reassembly features.

1.03 Most maintenance, lubrication, and adjustments can be accomplished simply by removing the subject component from the unit. If possible, disassembly should be confined to components, which can, in some cases, be removed without disturbing adjustments. When reassembling the components, be sure to check all associated adjustments, clearances, and spring tensions.

1.04 Retaining rings (Tru-arcs) are made of spring steel and have a tendency to release suddenly when being removed. Loss of these retainers can be minimized as follows: Hold the retainer by hand to prevent it from rotating. Place the blade of a suitable screwdriver in the slot of the retainer. Rotate the screwdriver in a direction to increase the diameter of the retainer for removal.

1.05 Avoid loss of springs in disassembly by holding one spring loop by hand while gently removing the opposite loop with a spring hook. Do not stretch or distort springs in removing them.

1.06 References made from left to right, up or down, and front or rear apply to the answer-back unit as viewed from the side with the answer-back mechanism to the left and the motor to the right.

2. DISASSEMBLY AND REASSEMBLY

2.01 In removing a component from the unit, the procedure followed and the location from which parts are removed must be carefully noted so that reassembly can be done correctly. Where no specific instructions are given for reassembly, reverse the procedure used in removing it.

COVER AND TERMINAL BLOCK

2.02 To remove the TP194792 cover and TP111289 terminal block, the following procedure should be used:

(a) Loosen the four cover fastening screws and remove cover from base plate.

(b) Remove the flat washers, lockwashers, and screws which secure the upper insulator to the terminal block. Remove upper insulator.

(c) Remove the power and control cable spade type terminal lugs from under the screws on the terminal block.

(d) Remove the studs, terminal block, and lower insulator from the base plate.

© 1965 by Teletype Corporation
All rights reserved.
Printed in U.S.A.

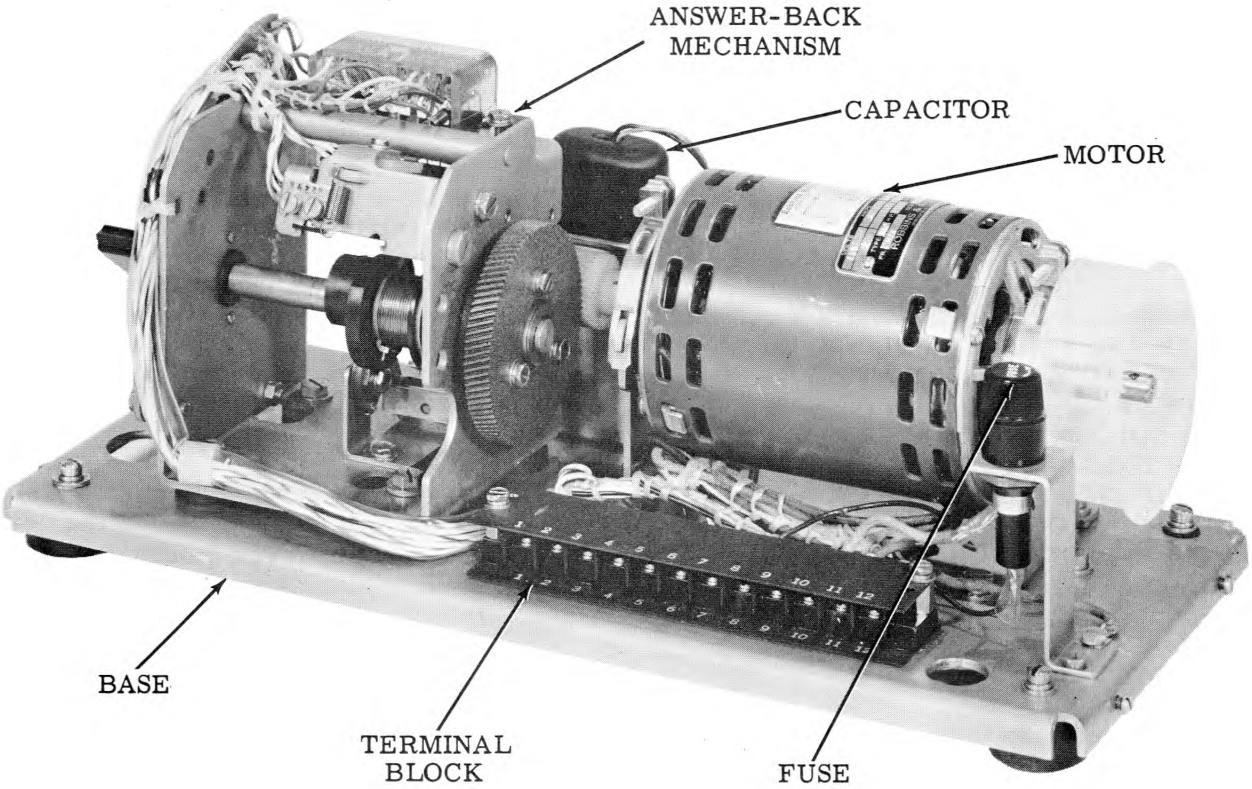

Figure 1 - Answer-Back Unit

MOTOR AND MOTOR MOUNTING BRACKET

2.03 Remove the TP192120 motor and TP192238 motor mounting bracket as follows:

(a) Remove the two TP151620 motor mounting straps from each end of motor. Lift motor from mounting bracket.

(b) Remove the four screws which secure motor mounting bracket. Lift bracket from base plate.

FUSE HOLDER AND BRACKET

2.04 Remove the TP116783 fuse holder and TP194814 fuse-holder bracket as follows:

(a) Remove the nut from lower end of fuse holder, and lift from fuse-holder bracket.

(b) Remove the two screws which secure fuse-holder bracket. Lift bracket from base plate.

CAPACITOR

2.05 To remove the TP192019 capacitor, remove the brackets from each side of capacitor and lift from base plate.

CODE DRUM

2.06 Remove the TP180827 code drum as follows:

(a) Lift the answer-back brace by means of its extension, to deflect all contact wires and the detent away from the code drum.

(b) Hold the feed pawl away and slip the code drum out. Do not overextend the feed pawl spring.

CONTACT BLOCK

2.07 To remove the TP180823 contact block, remove the screws, lockwashers, flat washers and spacers securing each side of the block and lift from bracket.

ANSWER-BACK MECHANISM AND BRACKET

2.08 Remove the three mounting screws from the TP194782 bracket and lift bracket and mechanism from base plate.

MAIN SHAFT

2.09 To remove the TP194784 main shaft from the answer-back mechanism proceed as follows:

(a) Remove the brush holder mounting screw, flat washer, and lockwasher. Remove the brush holder.

(b) Remove the three distributor disc mounting screws, flat washers, and lockwashers. Remove distributor.

(c) Remove the three mounting screws, flat washers, and lockwashers from the drive gear.

(d) Remove retaining ring, drive gear, and clutch sleeve by pulling over end of main shaft.

(e) Remove the mounting screws, flat washers, and lockwashers from each bearing on the main shaft and remove each bearing.

(f) Rotate main shaft until the flat portion of the motor hold cam is adjacent to the feed bail. Withdraw the shaft to the left until the right gear end clears the bracket. Slide shaft out from beneath the trip magnet.