43 TELEPRINTER 5-LEVEL PAPER TAPE — TAPE HANDLING AND ENCLOSURES

WIRING

1. GENERAL

1.01 This section provides wiring information for the 43 Teleprinter 5-Level Paper Tape — Tape Handling and Enclosures.

1.02 Whenever this section is reissued, the reason will be listed in this paragraph.

1.03 Related wiring information and cable connections are shown in Section 574-504-400.

1.04 Designations on wiring diagrams do not appear on the components.

1.05 When ordering replaceable parts or components, unless otherwise specified, prefix each part number with the letters "TP" (ie, TP410055).

2. WIRING

P201*
Mode Switch Connector

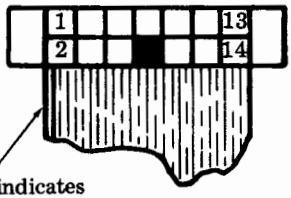

Red line indicates pin No. 1.

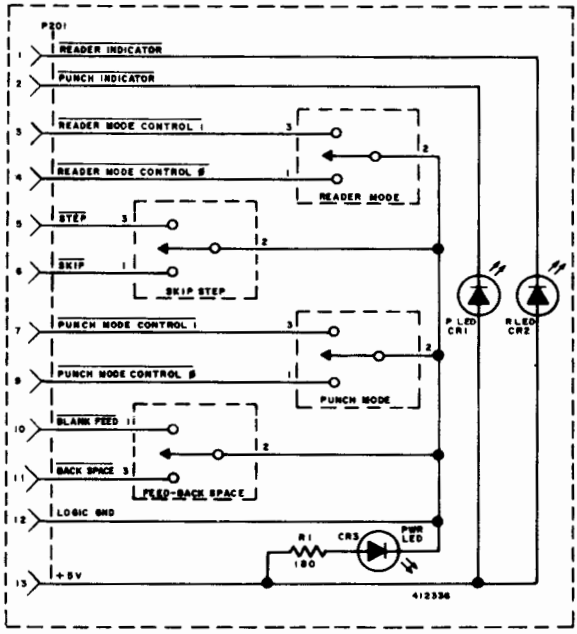

*Indicated connector on 412336 switch cards which mate with logic card.

Prepared for American Telephone and Telegraph Company by Teletype Corporation
© 1981 by Teletype Corporation
All rights reserved
Printed in U.S.A.