Lucent Technologies
Bell Labs Innovations

INTUITY CONVERSANT System Version 6.0 MAP/100P Maintenance

585-313-113
Comcode 108198003
Issue 1.0
March 1998

Copyright © 1997, Lucent Technologies
All Rights Reserved
Printed in U.S.A.

Notice
Every effort was made to ensure that the information in this book was complete and accurate at the time of printing. However, information is subject to change.

Your Responsibility for Your System's Security
Toll fraud is the unauthorized use of your telecommunications system by an unauthorized party, for example, persons other than your company's employees, agents, subcontractors, or persons working on your company's behalf. Note that there may be a risk of toll fraud associated with your telecommunications system and, if toll fraud occurs, it can result in substantial additional charges for your telecommunications services.

You and your system manager are responsible for the security of your system, such as programming and configuring your equipment to prevent unauthorized use. The system manager is also responsible for reading all installation, instruction, and system administration documents provided with this product in order to fully understand the features that can introduce risk of toll fraud and the steps that can be taken to reduce that risk. Lucent Technologies does not warrant that this product is immune from or will prevent unauthorized use of common-carrier telecommunication services or facilities accessed through or connected to it. Lucent Technologies will not be responsible for any charges that result from such unauthorized use.

Lucent Corporate Security
Whether or not immediate support is required, all toll fraud incidents involving Lucent products or services shoud be reported to Lucent Corporate Security at 1 800 821-8235. In addition to recording the incident, Lucent Corporate Security is available for consultation on security issues, investigation support, referral to law enforcement agencies, and educational programs.

Lucent Technologies Fraud Intervention
If you *suspect that you are being victimized* by toll fraud and you need technical support or assistance, call the Lucent Technologies National Customer Care Center Toll Fraud Intervention Hotline at 1 800 643-2353.

Federal Communications Commission Statement
Part 15: Class A Statement. This equipment has been tested and found to comply with the limits for a Class A digital device, pursuant to Part 15 of the FCC Rules. These limits are designed to provide reasonable protection against harmful interference when the equipment is operated in a commercial environment. This equipment generates, uses, and can radiate radio-frequency energy and, if not installed and used in accordance with the instruction manual, may cause harmful interference to radio communications. Operation of this equipment in a residential area is likely to cause harmful interference in which case the user will be required to correct the interference at his own expense.

Part 68: Network Registration Number. This equipment is registered with the FCC in accordance with Part 68 of the FCC Rules. It is identified by an FCC registration number.

Part 68: Answer-Supervision Signaling. Allowing this equipment to be operated in a manner that does not provide proper answer-supervision signaling is in violation of Part 68 Rules. This equipment returns answer-supervision signals to the public switched network when:

- Answered by the called station
- Answered by the attendant
- Routed to a recorded announcement that can be administered by the CPE user

This equipment returns answer-supervision signals on all DID calls forwarded back to the public switched telephone network. Permissible exceptions are:

- A call is unanswered
- A busy tone is received
- A reorder tone is received

Canadian Department of Communications (DOC) Interference Information
This digital apparatus does not exceed the Class A limits for radio noise emissions set out in the radio interference regulations of the Canadian Department of Communications.

Le Présent Appareil Nomérique n'émet pas de bruits radioélectriques dépassant les limites applicables aux appareils numériques de la class A préscrites dans le reglement sur le brouillage radioélectrique édicté par le ministére des Communications du Canada.

Trademarks
See the section titled "About This Book."

Ordering Information

Call:	Lucent Technologies Publications Center	
	Voice 1 800 457-1235	International Voice 317 361-5353
	Fax 1 800 457-1764	International Fax 317 361-5355
Write:	Lucent Technologies Publications Center	
	P.O. Box 4100	
	Crawfordsville, IN 47933	
Order:	Document No. 585-313-113	
	Comcode 108198003	
	Issue 1.0, March 1998	

You can be placed on a standing order list for this and other documents you may need. Standing order will enable you to automatically receive updated versions of individual documents or document sets, billed to account information that you provide. For more information on standing orders, or to be put on a list to receive future issues of this document, contact the Lucent Technologies Publications Center.

Warranty
Lucent Technologies provides a limited warranty on this product. Refer to the "Limited Use Software License Agreement" card provided with your package.

European Union Declaration of Conformity
Lucent Technologies Business Communications Systems declares that the equipment specified in this document conforms to the referenced European Union (EU) Directives and Harmonized Standards listed below:

EMC Directive	89/336/EEC
Low-Voltage Directive	73/23/EEC

CE

The "CE" mark affixed to the equipment means that it conforms to the above directives.

Comments
To comment on this document, return the comment card at the front of the document.

Acknowledgment
This document was prepared by Product Documentation, Lucent Technologies, Columbus, OH.

Contents

Contents iii

About This Book xx

- Purpose xx
- Intended Audiences xx
- Release History xx
- Trademarks xxi
- How to Use This Book xxi
  - For Troubleshooting Information xxi
  - For Diagnostic Information xxi
  - For Common System Procedures xxii
  - For Hardware Information xxii
  - For Software Information xxii
- Conventions Used in This Book xxii
  - Terminology xxii
  - Terminal Keys xxv
  - Screen Displays xxvi
  - Other Typography xxvi
  - Safety and Security Alert Labels xxvii
- Related Resources xxvii
  - Documentation xxvii
    - Required for the System Maintenance xxvii
    - Additional Suggested Documentation xxviii
  - Training xxviii
- How to Comment on This Book xxviii
- Disclaimer xxix

1 Troubleshooting 1-1

- Overview 1-1
- Purpose 1-1
- Repairing Power-Up Troubles 1-2
- Repairing Boot-Up Troubles 1-3
- Repairing System Installation/Upgrade/Set-Up Troubles 1-6
- Repairing Application-Related Troubles 1-7
  - Repairing 3270 Communication Troubles 1-9

Repairing Speech Recognition Troubles 1-13
Repairing General Speech Recognition Troubles 1-13
Repairing Speech Recognition Accuracy Troubles 1-19
Repairing ORACLE Database Troubles 1-23
Repairing Script Builder Troubles 1-27
Repairing Script Builder FAX Actions Troubles 1-28
Repairing Primary Rate Interface Troubles 1-31
Repairing Form Filler Plus Troubles 1-34
Repairing Text-to-Speech Troubles 1-35
Repairing ASAI Troubles 1-39
General ASAI Troubleshooting 1-40
Repairing ASAI Domain Troubles 1-42
Repairing ASAI Channel Troubles 1-44
Repairing ASAI Digital Link Troubles 1-47
Correlation Between Voice System and PBX Cause Values 1-49
- Repairing Administrative Troubles 1-52
- Repairing Operational Troubles 1-53
- Repairing Feature Licensing Troubles 1-53
- Repairing Other Voice System Troubles 1-54
Repairing Switching Control Center System (SCCS) and Alarm Relay Unit (ARU) Troubles 1-54
Repairing Call Transfer Troubles 1-57
Repairing Performance Troubles 1-58
Repairing Diagnostics Troubles 1-58
Repairing Touch-Tone Input Troubles 1-59
Repairing Report Troubles 1-59
Repairing Channel/Card State Troubles 1-60
- Reducing Load 1-61
Indicators of Performance Problems 1-61
Reports of Poor Response Time 1-61
Load-Related Messages in the Alarm Log 1-61
Identifying Load Culprits 1-62
Checking CPU Resources 1-62
Checking Disk Resources 1-64

Checking Memory Resources 1-65
Checking SP Card Resources 1-66
Reducing Load for Host 1-66
Reducing Load for Database 1-67
Reducing Load for DIPs 1-67
Reducing Load for Voice Processing 1-67
Voice Play 1-67
Coding Algorithm 1-67
Phrase Length 1-68
Speech Pool 1-68
Reducing Voice Play Load 1-69
Voice Code 1-69
Reducing CPU Usage 1-69
Inefficient DIPs 1-70
Run Away Processes 1-70
Inefficient Scripts 1-70
Reducing Disk Usage 1-70
Reducing Memory Usage 1-71

2 Diagnostics 2-1

- Overview 2-1
- Purpose 2-1
- Circuit Card Diagnostics 2-2

Checking Cable Connections for Cables other than the TDM Bus Cable 2-2
Checking the Terminating Resistors 2-3
Checking the Backplane Slot 2-4
Checking the Switch Settings 2-5
Checking the Other Circuit Cards 2-6
Checking a Circuit Card Using the INTUITY CONVERSANT Windows 2-6
Checking a Tip/Ring Circuit Card 2-7
Checking the Tip/Ring Circuit Card 2-7
Checking a Tip/Ring Circuit Card Channel 2-9
Checking an IPCI Circuit Card 2-10
Checking a FAX Circuit Card 2-11
Checking the FAX Circuit Card 2-11

Checking a FAX Circuit Card Channel 2-13
Checking an EQUINOX Multi-Port Serial Circuit Card 2-14
Displaying Serial Port Driver Stats 2-15
Driver Status 2-15
Board Status 2-16
Displaying Port Stats 2-17
Port Status 2-17
Termio 2-19
Register Dump 2-19
Diagnostics 2-20
Serial Port External Loopback Test 2-20
Serial Port Internal Loopback Test 2-20
- Database Diagnostics 2-23
- Extents Diagnostics 2-24
- ORACLE Network Diagnostics 2-25
- TDM Bus Diagnostics 2-27
Using the Command Line 2-27
Using the INTUITY CONVERSANT Windows 2-29
- Voice Port Loop Around Test 2-30
- ASAI Trace Utility 2-32
Low Detail 2-33
Normal Detail 2-34
A_Callinfo trace information 2-34
A_Event trace information 2-34
A_RouteSel trace information 2-35
A_Tran trace information 2-35
High Detail 2-37
Call events 2-37
Routing Events 2-38
Domain Enable/Disable Requests 2-38
Channel Login/Logout Requests 2-39
Heartbeat Requests 2-39
3 Common System Procedures 3-1
- Overview 3-1

- Purpose 3-1
- About Cartridge Drives and Tapes 3-2
  - When to Change Cartridge Tapes 3-2
  - Inserting and Removing Cartridge Tapes 3-2
    - Inserting the Cartridge Tape 3-2
    - Removing the Cartridge Tape 3-4
- About Diskette Drives and Diskettes 3-4
  - Types of Diskettes 3-5
  - Inserting and Removing Diskettes 3-5
    - Inserting the Diskette 3-5
    - Removing the Diskette 3-5
- Backing Up the INTUITY CONVERSANT System 3-6
  - Performing a System Backup 3-6
    - Backing Up the Root File System 3-7
    - Backing Up the Speech Files 3-8
    - Verifying the Back Up 3-10
  - Performing Other Backups 3-11
- Restoring the INTUITY CONVERSANT System 3-11
  - Performing a System Restoration 3-11
  - Perfuming a System Restoration on a System which has been Upgraded from INTUITY CONVERSANT V5 3-14
  - Restoring the Database Directory from System Backup 3-14
- Administering the Voice System 3-15
  - Starting the Voice System 3-15
    - Using the INTUITY CONVERSANT Windows 3-15
    - Using the Command Line 3-17
  - Stopping the Voice System 3-17
    - Using the INTUITY CONVERSANT Windows 3-17
    - Using the Command Line 3-19
  - Shutting Down the Voice System 3-19
- Administering the Operating System 3-20
  - Shutting Down the Operating System 3-20
    - Using the INTUITY CONVERSANT Windows 3-20
    - Using the Command Line 3-22

Rebooting the UNIX System 3-22
- Administering the Database System 3-22
  - Starting the Database System 3-23
  - Stopping the Database System 3-23
  - Dropping a Database Table 3-24
- Recreating the System Traffic Tables 3-25

4 Getting Inside the Computer 4-1
- Overview 4-1
- Purpose 4-1
- Protecting against Damage from Electrostatic Discharge 4-2
- Removing Power from the MAP/100P 4-5
- Accessing the Circuit Card Cage 4-6
- Replacing the Dress Cover 4-7
- Restoring Power to the MAP/100P 4-8

5 Replacing, Installing, or Upgrading Circuit Cards 5-1
- Overview 5-1
- Purpose 5-1
- General Procedures 5-1
  - Removing a Circuit Card 5-2
  - Installing a Circuit Card 5-3
- Settings for Optional Circuit Cards 5-4
  - Tip/Ring Circuit Cards 5-5
    - IVP4 (AYC6) Circuit Card 5-5
    - IVP6 (AYC5B) Circuit Card 5-8
    - IVP6-IU (AYC16) Circuit Card 5-9
    - IVP6-IA (AYC26) Circuit Card 5-10
    - IVP6-ID (AYC27) Circuit Card 5-10
    - IVP6 (AYC28) Circuit Card 5-10
    - IVC6 (AYC10) Circuit Card 5-10
    - NGTR (AYC30) Circuit Card 5-11
    - Installing the Tip/Ring Circuit Card Driver 5-13
  - E1/T1 Circuit Card 5-15
    - Jumper Settings 5-16

Switch Settings 5-16
Installing the E1/T1 Circuit Card Driver 5-17
T1 Circuit Cards 5-19
AYC3B Circuit Card 5-19
Jumper Settings 5-20
Switch Settings 5-20
AYC11 Circuit Card 5-21
Jumper Settings 5-22
Switch Settings 5-23
Speech and Signal Processor (AYC43) Circuit Card 5-23
Jumper Settings 5-24
Switch Settings 5-24
Two-Position Switch Settings 5-25
Rotary Switch Settings 5-25
Memory 5-26
Text-to-Speech (AYC9) Circuit Card 5-26
Jumper Settings 5-27
Switch Settings 5-27
Fax Circuit Cards 5-29
Version 1 5-29
Switches 5-30
Jumper Settings 5-31
Version 2 5-32
Jumper Settings 5-33
Switch Settings 5-34
Ethernet LAN Circuit Cards 5-35
Version 1 5-35
Installing the Version 1 Hardware Driver 5-36
Version 2 5-38
Installing a Version 2 LAN Circuit Card 5-40
Installing the Version 2 Hardware Driver 5-40
Installing the Version 2 LAN Circuit Card 5-44
Configuring the Version 2 LAN Circuit Card 5-44
Verifying the Version 2 LAN Circuit Card Installation 5-47

Replacing a Version 2 LAN Circuit Card 5-47
Upgrading the INTUITY CONVERSANT System from a Version 1 LAN Circuit Card to a Version 2 LAN Circuit Card 5-48
Determining the Current Setup 5-48
Removing Network Entries 5-49
Upgrading the Hardware Driver 5-49
Upgrading the LAN Circuit Card 5-50
Establishing Network Entries 5-51
Token Ring Circuit Cards 5-52
Version 1 5-52
Jumper Settings 5-53
Switch Settings 5-53
IBM Auto 16/4 5-55
IBM Turbo 16/4 5-64
Installing the Token Ring Hardware Support Package 5-72
Installing the Token Ring Hardware Support Package 5-74
PC/ISDN (IPCI) Circuit Card 5-77
Asynchronous Circuit Cards 5-79
8-Port IPC-900 or Gemini-1000 Asynchronous Serial Card 5-79
Jumper Settings 5-79
8-Port Asynchronous Circuit Card (EQUINOX Megaport 8C5 8-Port Serial I/O Board) 5-80
Installing the Equinox Megaport Card Driver 5-82
Installing the Equinox SuperSerial Card Driver 5-85
Synchronous Cards 5-87
PC/XL Synchronous I/O Card 5-87
FIFO/SIB Synchronous Host Circuit Card 5-88
Jumper Settings 5-90
Switch Settings 5-90
■ Standard Circuit Cards 5-92
P5 200 MHz CPU Circuit Card 5-92
Setting the Resource Options 5-93
Jumper Settings 5-93

Switch Settings 5-94
Placing the P5 200 MHz CPU Circuit Card in the MAP/100P 5-94
Verifying the Parameter Settings 5-96
Host Adapter Parameter Settings 5-96
CMOS Parameter Settings 5-99
Video Controller Circuit Cards 5-105
Remote Maintenance Circuit Card 5-105
Types of Remote Maintenance Circuit Cards 5-106
Setting the Resource Options 5-108
Inserting the Remote Maintenance Circuit Card 5-109
Installing the Remote Maintenance Circuit Card Software Package 5-109

6 Replacing the Hard Disk Drive 6-1

- Overview 6-1
- Purpose 6-1
- Identifying a Failed Hard Disk Drive 6-2
  - Hard Disk Drive Contents 6-2
  - Identifying a Hard Disk Drive 0 Failure in a Nonmirrored or Single-Disk System 6-3
  - Identifying a Speech Storage Hard Disk Drive Failure in a Nonmirrored System 6-4
  - Identifying a Hard Disk Drive Failure in a Mirrored System 6-4
- Hardware Procedures for Replacing a Hard Disk Drive 6-4
  - Removing a Hard Disk Drive 6-6
  - Mounting a Hard Disk Drive in the MAP/100P 6-7
- Replacing Hard Disk Drive 0 6-8
  - Replacing Hard Disk Drive 0 (Nonmirrored System) 6-8
    - Replacing the Hard Disk Drive 6-8
    - Restoring the INTUITY CONVERSANT System 6-9
  - Replacing Hard Disk Drive 0 (Mirrored System) 6-9
- Replacing a Hard Disk Drive other than Drive 0 6-10
  - Software and Hardware Procedures for Replacing a Hard Disk Drive (Nonmirrored System) 6-10

Replacing the Hard Disk Drive 6-11
Restoring the INTUITY CONVERSANT System 6-11
Software and Hardware Procedures for Replacing a Hard Disk Drive (Mirrored System) 6-14
Replacing the Hard Disk Drive 6-14
Restoring the INTUITY CONVERSANT System 6-15
■ Adding a Hard Disk Drive 6-17
Adding a Hard Disk Drive to a System for Mirroring 6-17
Adding a Hard Disk Drive to a System for Speech Storage 6-21
■ Cleaning a Hard Disk Drive 6-24
Using the fdisk Command 6-24
Low-Level Formatting the Hard Disk Drive 6-26
■ Mirroring 6-28
Establishing Mirroring 6-28
Removing Mirroring 6-31
7 Replacing Other Components 7-1
■ Overview 7-1
■ Purpose 7-2
■ Replacing Backplanes 7-2
Replacing the Circuit Card Backplane 7-2
Removing the Circuit Card Backplane 7-3
Installing the Circuit Card Backplane 7-4
Replacing the Power Supply Backplane 7-4
Removing the Power Supply Backplane 7-5
Installing the Power Supply Backplane 7-7
Replacing the Hard Disk Drive Carriage Backplane 7-7
Removing the Hard Disk Drive Carriage Backplane 7-9
Installing the Hard Disk Drive Carriage Backplane 7-10
■ Replacing Cables 7-11
Replacing the Diskette Cable 7-11
Removing the Diskette Cable 7-12
Installing the Diskette Cable 7-13

Replacing the Console Alarm Cable 7-13
Removing the Console Alarm Cable 7-14
Installing the Console Alarm Cable 7-15
Replacing the Power Supply Cables 7-16
Replacing the Cartridge Tape and Diskette Drive Power Supply Cable 7-16
Removing the Cartridge Tape and Diskette Drive Power Supply Cable 7-16
Installing the Cartridge Tape and Diskette Drive Power Supply Cable 7-17
Replacing the Hard Disk Drive Carriage Backplane Power Supply Cable 7-17
Removing the Hard Disk Drive Carriage Power Supply Cable 7-18
Installing the Hard Disk Drive Carriage Power Supply Cable 7-19
Replacing the Circuit Card Backplane Power Supply Cable 7-19
Removing the Circuit Card Backplane Power Supply Cable 7-20
Installing the Circuit Card Backplane Power Supply Cable 7-21
Replacing the Remote Maintenance Circuit Card Interface Cable 7-22
Removing the Remote Maintenance Circuit Card Interface Cable 7-23
Installing the Remote Maintenance Circuit Card Interface Cable 7-23
Replacing the Reset Cable 7-25
Removing the Reset Cable 7-26
Installing the Reset Cable 7-26
Installing the SCSI Cable 7-27
Removing the SCSI Cable 7-27
Installing the SCSI Cable 7-28
Installing the SCSI ID Cable 7-28
Removing the SCSI ID Cable 7-29
Installing the SCSI ID Cable 7-29
■ Replacing the Cartridge Tape Drive 7-30
Removing a Cartridge Tape Drive 7-31

Installing a Cartridge Tape Drive 7-33
- Replacing the Console Alarm Panel 7-34
  - Removing the Console Alarm Panel 7-35
  - Installing the Console Alarm Panel 7-36
- Replacing the Diskette Drive 7-37
  - Removing the Diskette Drive 7-37
  - Installing a Diskette Drive 7-38
- Replacing a Fan 7-41
  - Removing a Fan 7-41
  - Installing a Fan 7-42
- Replacing the Fan Filter 7-43
  - Removing Fan Filters 7-43
  - Cleaning the Fan Filter 7-44
  - Installing Fan Filters 7-44
- Replacing the Fuse 7-44
  - Removing the Fuse 7-46
  - Installing the Fuse 7-47
- Replacing the Hard Disk Drive Carriage 7-48
  - Removing the Hard Disk Drive Carriage 7-48
  - Installing the Hard Disk Drive Carriage 7-49
- Replacing the Memory Modules 7-49
  - Memory and SIMM Description 7-49
  - Identifying a Damaged SIMM 7-51
    - Checking for Proper SIMM Seating 7-51
    - Checking for Defective SIMMs 7-52
  - Removing SIMMs 7-53
  - Installing SIMMs 7-53
- Replacing the Power Supply 7-54
  - Removing a Power Supply 7-55
  - Installing a Power Supply 7-57
- Replacing the Remote Maintenance Circuit Card Interface Board 7-57
  - Removing the Remote Maintenance Circuit Card Interface Board 7-58
  - Installing the Remote Maintenance Circuit Card Interface Board 7-59

- Replacing a Terminator SIP 7-59
- Replacing the Tip/Ring Distribution Hardware 7-60
  - Removing the Tip/Ring Distribution Hardware 7-62
  - Installing the Tip/Ring Distribution Hardware 7-63

8 Installing Base System Software 8-1

- Overview 8-1
- Purpose 8-1
- Installing Base System Software 8-2
  - Beginning the UnixWare Installation 8-2
  - Setting Up the UnixWare Environment 8-6
  - Initializing the Hard Disk Drives 8-9
  - Transferring the UnixWare Files 8-15
  - Installing the Application Server 8-17
  - Initializing the Mouse 8-36
  - Setting Up User Accounts 8-39
  - Setting up the Monitor 8-41
- Installing the VERITAS Software Packages 8-46
  - Installing the VERITAS Volume Manager Package 8-46
  - Installing the VERITAS File System Administration Package 8-48
  - Activating the Volume Manager 8-49
- Installing the LAN Card Driver Package 8-52
- Installing the INTUNIX Patch and Enhancement Package 8-52

9 Installing the INTUITY CONVERSANT System Software 9-1

- Overview 9-1
- Purpose 9-1
- Installing the INTUITY CONVERSANT Base Software Set 9-2

10 Installing the Optional Feature Software 10-1

- Overview 10-1
- Purpose 10-1
- Installing the Hardware Resource Allocator Package 10-2
- Installing the Asynchronous Host Toolkit 10-3

Installing the ASYNC_TEST Transaction Script Builder Backup 10-5
Installing the ASYNC_TEST Speech Script Builder Backup 10-6
- Installing the Adjunct/Switch Application Interface Packages 10-7
  - Installing ASAI on a System Using an IPCI circuit card 10-7
    - Installing the CALLVISOR PC ISDN Package 10-8
    - Installing the CALLVISOR PC LAN Gateway Package 10-10
    - Installing the CALLVISOR PC ASAI Package 10-11
  - Installing ASAI on a System Using a LAN Circuit Card 10-13
    - Installing the CALLVISOR PC ISDN Package 10-13
    - Installing the CALLVISOR PC LAN Gateway Package 10-15
    - Installing the CALLVISOR PC ASAI Package 10-16
  - Installing the Adjunct/Switch Application Interface Package 10-18
- Installing the Analog Switch Interface Package 10-20
- Installing the Call Bridge Application Package 10-21
- Installing the Call Classification Analysis Package 10-22
- Installing the Data Collection Toolkit 10-24
- Installing the Dial Pulse Recognition Package 10-25
- Installing the Enhanced Basic Speech Package 10-27
- Installing the External Alarms Package 10-28
- Installing the Script Builder FAX Actions Package 10-29
- Installing the FlexWord Speech Recognition Package 10-35
  - Installing the ASP Driver 10-36
  - Installing FlexWord Recognition - Base 10-36
  - Installing FlexWord Recognition - U.S. English 10-37
- Installing the FlexWord Toolkit Package 10-40
- Installing the Form Filler Application 10-42
- Installing the Graphical Speech Editor Package 10-44
- Installing the Intelligent Ports Card Package 10-45
- Installing the LAN Adapter Setup Program 10-48

- Installing the LINKix Packages 10-49
  - Installing Package 1 (linkix_coproc) 10-52
  - Installing Package 2 (linkix_coproc Supplement) 10-55
  - Installing Package 3 (linkix_3270 Supplement) 10-56
  - Installing Package 4 (linkix_hte Supplement) 10-56
  - Installing Package 5 (linkix_3270) 10-57
  - Installing Package 6 (linkix_hte) 10-57
  - Installing Package 7 (linkix_mgmt) 10-58
  - Installing Package 8 (linkix_netman) 10-58
  - Installing Package 9 (linkix_sib) 10-59
  - Installing Package 10 (linkix_sib Supplement) 10-59
  - Installing Package 11 (linkix_sna Supplement) 10-60
  - Installing Package 12 (linkix_sna) 10-60
  - Completing the Installation 10-61
- Installing the Host Packages 10-62
  - Installing the Synchronous Host Interface Package 10-62
  - Installing the 3270 Enhanced File Transfer Package 10-63
  - Installing the NetView Alarm Interface Package 10-65
- Installing the ORACLE Development Packages 10-66
  - Installation Requirements 10-66
  - Installing the ORACLE Add-on Packages 10-67
- Installing the ORACLE SQL*Net TCP/IP Package 10-70
- Installing the Primary Rate Interface Packages 10-71
  - Installing the ISDN Primary Rate Interface Package 10-72
  - Installing the Advanced Primary Rate Interface Package 10-73
- Installing the Script Builder Package 10-74
- Installing T1 Packages 10-76
  - Installing the Line Side T1 Interface Packages 10-77
    - Installing the Line Side T1 Interface Package - Definity 10-77
    - Installing the Line Side T1 Interface Package - Galaxy 10-78

Installing the T1 E&M Package 10-80
- Installing the Text To Speech Package 10-81
- Installing the WholeWord Recognition Packages 10-85
  - Installing the WholeWord Recognition - Base Package 10-85
  - Installing the WholeWord Recognition - Language Package 10-86
- Installing the Feature Test Script Package 10-87
- Removing Software Packages 10-90

A System Configuration A-1
- Overview A-1
- Purpose A-1
- Component Assignments A-1
  - Circuit Cards A-1
  - Operating Hardware A-2
- Hardware Resource Allocator Operation A-4
  - Adding Hardware to an Existing Configuration A-4
  - Removing Hardware from an Existing Configuration A-6
  - Specifying a New Configuration A-9
  - Saving a Configuration A-14
  - Viewing a Configuration A-15
    - Viewing a Successful Configuration A-15
    - Viewing an Unsuccessful Configuration A-16
    - Viewing a Dated Configuration A-17
  - Comparing a Configuration A-17
  - Presetting Hardware Resources A-18
- Configuration Device Data A-19
  - The show_devices Command A-19

B Component Ordering Numbers B-1
- Component Ordering Numbers B-1

C How to Build a System Using This Book C-1
- Checklist for Building a System C-1

D Disaster Recovery Checklists D-1

- Disaster Recovery Checklists D-1

  Checklist for Software Reloading on Nonmirrored INTUITY CONVERSANT Systems with Existing Hard Disk Drives D-2

  Checklist for INTUITY CONVERSANT Systems with All New Hard Disk Drives D-3

  Checklist for Nonmirrored Intuity CONVERSANT Systems with a New Hard Disk Drive 0 and Other Existing Hard Disk Drives D-4

  Checklist for Nonmirrored Intuity CONVERSANT Systems with a New Hard Disk Drive, Other than Hard Disk Drive 0 D-5

  Checklist for Mirrored Intuity CONVERSANT Systems with a New Hard Disk Drive 0 and Other Existing Hard Disk Drives D-7

  Checklist for Mirrored Intuity CONVERSANT Systems with a New Hard Disk Drive, Other than Hard Disk Drive 0 D-9

GL Glossary GL-1

IN Index IN-1

About This Book

Purpose

This book, *Lucent INTUITY CONVERSANT System Version 6.0 MAP/100P Maintenance*, 585-313-113, contains information for troubleshooting and diagnosing problems associated with the MAP/100P and hardware. Component replacement procedures and common system procedures are also included in the book. Installation procedures for base system software, INTUITY™ CONVERSANT® system software, and optional feature software. Appendices contain a system configuration description, a list of component ordering numbers, a checklist for building a system, and checklists for disaster recovery.

Intended Audiences

This book is intended primarily for the on-site service technician and system administrators. Secondary audiences include the following:

- Field support — Technical Service Organization (TSO)
- Helpline personnel

We assume that the primary users of this book have completed the MAP/100P hardware installation training course (see “Related Documentation and Training” below).

Release History

This is the first release of this book.

Trademarks

Lucent Technologies has made every effort to supply trademark information about company names, products, and services mentioned in the INTUITY CONVERSANT documentation library. Trademarks indicated below were derived from various sources.

- 5ESS, AUDIX, CONVERSANT, DEFINITY, FlexWord, and Voice Power are registered trademarks and INTUITY is a trademark of Lucent Technologies.
- Microsoft, MS, MS-DOS, Internet Explorer, and Excel are registered trademarks and Windows is a trademark of Microsoft Corporation.
- Truevoice is a registered trademark of AT&T.
- UnixWare is a registered trademark of The Santa Cruz Operation, Inc.
- UNIX is a registered trademark of UNIX System Laboratories, Inc.
- Novell is a registered trademark of Novell, Inc.
- ORACLE, ORACLE*Terminal, OBJECT*SQL, SQL*FORMS, SQL*Menu, SQL*Net, SQL*Plus, PRO*C, and SQL*ReportWriter are trademarks of the Oracle Corporation.
- IBM and VTAM are registered trademarks of International Business Machines Corporation.
- CLEO and LINKix are trademarks of CLEO Communications.
- Hayes and Smartmodem are trademarks of Hayes Microcomputer Products, Inc.
- Ethernet is a trademark of Xerox Corporation.

How to Use This Book

This book is designed to help you maintain your INTUITY CONVERSANT system. It should be used as a quick-reference to obtain specific information you may need on a particular topic.

For Troubleshooting Information

Basic troubleshooting information is available in Chapter 1, “Troubleshooting.”

For Diagnostic Information

Instructions for conducting diagnostics are available in Chapter 2, “Diagnostics.”

For Common System Procedures

Instructions for conducting common system procedures are available in Chapter 3, "Common System Procedures."

For Hardware Information

Instructions for replacing or installing hardware components of the MAP/40 are available in Chapter 4, "Getting Inside the Computer," Chapter 5, "Replacing, Installing, or Upgrading Circuit Cards," Chapter 6, "Replacing the Hard Disk Drive," and Chapter 7, "Replacing Other Components."

For Software Information

Instructions for replacing or installing software components of the MAP/40 are available in Chapter 8, "Installing Base System Software," Chapter 9, "Installing the INTUITY CONVERSANT System Software," and Chapter 10, "Installing the Optional Feature Software."

Conventions Used in This Book

This section describes the conventions used in this book.

Terminology

- The word "type" means to press the key or sequence of keys specified. For example, an instruction to type the letter "y" is shown as

  Type **y** to continue.

- The word "enter" means to type a value and then press [ENTER]. For example, an instruction to type the letter "y" and press [ENTER] is shown as

  Enter **y** to continue.

- The word "select" means to move the cursor to the desired menu item and then press [ENTER]. For example, an instruction to move the cursor to the start test option on the Network Loop-Around Test screen and then press [ENTER] is shown as

  Select `Start Test.`

- The INTUITY CONVERSANT system displays *windows*, *screens*, and *menus*. Windows and screens both show and request system information (Figure 1 through Figure 4). Menus (Figure 5) present options from which you can choose to view another menu, or a screen or window.

```
3                    Shut Down the Machine

Users currently logged on:

root        console      Jul  8 06:39
root        pts000       Jul  8 08:48
```

Figure 1. Example of an INTUITY CONVERSANT Window Showing Information

```
In order to install UnixWare, you must reserve a partition (a
portion of your hard disk's space) on your primary hard disk for
the UNIX System.After you press 'ENTER' you will be shown a screen
that will allow you to create new partitions, delete existing
partitions or change the active partition of your primary hard
disk (the partition that your computer will boot from).

WARNING: All files in any partition(s) you delete will be
destroyed. If you wish to attempt to preserve any files from an
existing UNIX System, do not delete its partition(s).

The UNIX System partition that you intend to use on the primary
hard disk must be at least 120 MBs and labeled 'ACTIVE.'
```

Figure 2. Example of an INTUITY CONVERSANT Screen Showing Information

Figure 3. Example of an INTUITY CONVERSANT Window Requesting Information

```
You may use a partition of your secondary hard disk.  If you
choose to use a partition of your secondary hard disk you will be
shown a screen that will allow you to partition your secondary
hard disk.

WARNING: All files in any partition(s) you delete will be
destroyed.

If you choose to create a UNIX System partition on your secondary
hard disk, it must be at least 40 MBs.

Your Options are:

1.  Do not use a partition of the secondary hard disk for
    the UNIX System.
2.  Use a partition of the secondary hard disk for the
    UNIX System.

Press '1' or '2' followed by 'ENTER'.
```

Figure 4. Example of an INTUITY CONVERSANT Screen Requesting Information

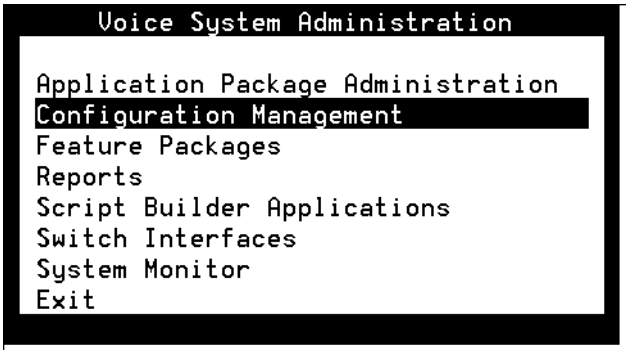

Figure 5. Example of an INTUITY CONVERSANT Menu

Terminal Keys

- Keys that you press on your terminal or PC are represented as rounded boxes. For example, an instruction to press the enter key is shown as

  Press (ENTER).

- Two or three keys that you press at the same time on your terminal or PC (that is, you hold down the first key while pressing the second and/or third key) are represented as a series of separate rounded boxes. For example, an instruction to press and hold (ALT) while typing the letter “d” is shown as

  Press (ALT) (D).

- Function keys on your terminal, PC, or system screens, also known as *soft keys*, are represented as round boxes followed by the function or value of that key enclosed in parentheses. For example, an instruction to press function key 3 is shown as

  Press (F3) (Choices).

- Keys that you press on your telephone keypad are represented as square boxes. For example, an instruction to press the first key on your telephone keypad is shown as

  Press [1] to record a message.

Screen Displays

- Values, system messages, field names, and prompts that appear on the screen are shown in typewriter-style `constant-width` type, as shown in the following examples:

  Example 1:

  Enter the number of ports to be dedicated to outbound traffic in the `Maximum Simultaneous Ports` field.

  Example 2:

  ```
  Alarm Form Update was successful.

  Press <Enter> to continue.
  ```

- The sequence of menu options that you must select to display a specific screen or submenu is shown as follows:

  Start at the Voice System Administration menu and select

  ```
  > Reports
      > Message Log Report
  ```

  In this example, you would access the Voice System Administration menu and select the Reports menu. From the Reports menu, you would then select the Message Log Report window.

- Screens shown in this book are examples only. The screens you see on your machine will be similar, but not exactly the same.

Other Typography

- Commands and text you type in or enter appear in **bold type**, as in the following examples:

  Example 1:

  Enter **change-switch-time-zone** at the `enter command:` prompt.

  Example 2:

  Type **high** or **low** in the `Speed:` field.

- Command variables are shown in ***bold italic*** type when they are part of what you must type in and *regular italic* type when they are not, for example:

  Enter **ch ma *machine_name***, where *machine_name* is the name of the call delivery machine you just created.

Safety and Security Alert Labels

This book uses the following symbols to call your attention to potential problems that could cause personal injury, damage to equipment, loss of data, service interruptions, or breaches of toll fraud security:

CAUTION:
Indicates the presence of a hazard that if not avoided can or will cause minor personal injury or property damage, including loss of data.

WARNING:
Indicates the presence of a hazard that if not avoided can cause death or severe personal injury.

DANGER:
Indicates the presence of a hazard that if not avoided will cause death or severe personal injury.

SECURITY ALERT:
Indicates the presence of a toll fraud security hazard. Toll fraud is the unauthorized use of a telecommunications system by an unauthorized party.

Related Resources

This section describes additional documentation and training available for you to learn more about the INTUITY CONVERSANT product.

Documentation

NOTE:
The *INTUITY CONVERSANT System Version 6.0 System Description*, 585-310-241, contains a detailed description of all books included in V6.0 INTUITY CONVERSANT documentation library. Always refer to the appropriate book for specific information on planning, installing, administering, or maintaining an INTUITY CONVERSANT system.

Required for the System Maintenance

To repair or alter the configuration of your system, you must have a copy of this book, *INTUITY CONVERSANT System V6.0 MAP/100P Maintenance*, 585-313-113.

Additional Suggested Documentation

It is suggested that you also obtain and use the following books:

- *INTUITY CONVERSANT System Version 6.0 Alarms and Log Messages*, 585-310-182
- *INTUITY CONVERSANT System Version 6.0 MAP/100P New System Installation*, 585-313-112

See the inside front cover for information on how to order INTUITY CONVERSANT documentation.

Training

The following training class is recommended as a prerequisite to performing repairs on a V6.0 INTUITY CONVERSANT system:

- Course No. BO3620A, CONVERSANT Installation and Maintenance (for domestic installations)
- Course No. GO3603A, CONVERSANT Installation and Maintenance (for international installations)

For more information on INTUITY CONVERSANT training, call the BCS Education and Training Center at one of the following numbers:

- Organizations within Lucent Technologies: (904) 636-3261
- Lucent Technologies customers and all others: (800) 255-8988

How to Comment on This Book

We are interested in your suggestions for improving this book. Please complete and return the reader comment card that is located behind the title page.

If the reader comment card has been removed, send your comments to:

Lucent Technologies
Product Documentation
Room 22-2H15
11900 North Pecos Street
Denver, Colorado 80234

You may also fax your comments to the attention of the Lucent Technologies INTUITY CONVERSANT writing team at (303) 538-1741.

Please mention the name and order number of this book, *INTUITY CONVERSANT System V6.0 MAP/100P Maintenance*, 585-313-113.

Disclaimer

Intellectual property related to this product and registered to AT&T Corporation has been transferred to Lucent Technologies Incorporated.

Any reference within this text to American Telephone and Telegraph Corporation or AT&T should be interpreted as references to Lucent Technologies Incorporated. The exception is cross references to books published prior to December 31, 1996, which retain their original AT&T titles.

Lucent Technologies—formed as a result of AT&T's planned restructuring—designs, builds, and delivers a wide range of public and private networks, communications systems and software, consumer and business telephone systems, and microelectronic components. The world-renowned Bell Laboratories is the research and development arm for the company.

Troubleshooting

1

Overview

This chapter describes some basic troubleshooting procedures for the most common system problems.

Purpose

The purpose of this chapter is to provide the on-site technician or system administrator with repair procedures for the most common system procedures.

The following assumptions are made in this chapter:

- You have checked the Message Log for any relevant messages. See Chapter 1, “Getting Started,” in *INTUITY™ CONVERSANT® Version 6.0 System Alarms and Log Messages*, 585-310-182.
- The resolutions in the second column of the tables are intended to provide a starting point to isolate a problem and may not be exhaustive.
- The procedures in the second column assume general editing knowledge and script familiarity, as most of the commands and procedures are performed from the command line.
- You have already performed a visual inspection of the system.

Repairing Power-Up Troubles

Power-up troubles are experienced when you are first turning the system on. Table 1-1 lists the indications related to power-up troubles:

Table 1-1. Repairing Power Up Troubles

Indication	Corrective Action
The system will not power up.	1. Verify that the power toggle switch on the front is in the ON position. 2. Verify all external system connections (power cords and monitor cables) are correct (for example, the blue cable connects to the 3270 card and not to the system parallel port). 3. Verify all external system connections are secure.
During start-up, the system displays the following message: `"Shared memory is marked as invalid. cvis_menu exiting."`	1. Stop the voice system. See "Stopping the Voice System" in Chapter 3, "Common System Procedures". 2. Start the voice system. See "Starting the Voice System" in Chapter 3, "Common System Procedures". 3. Enter **cvis_mainmenu** 4. If the problem persists: a. Stop the voice system. See "Stopping the Voice System" in Chapter 3, "Common System Procedures". b. Enter **cp /gendb/shmem/devtbl gendb/shmem/devtbl.old** c. Enter **rm /gendb/shmem/devtbl** d. Start the voice system. See "Starting the Voice System" in Chapter 3, "Common System Procedures".
The **start_vs** command takes a long time to initialize on a system with many analog lines.	1. Starting at the Switch Administration screen, set Dial-Tone Training to "No." See Chapter 5, "Switch Interface Administration," of *INTUITY™ CONVERSANT® System Version 6.0 Administration*, 585-310-591. **NOTE:** If dial-tone training is "no," you should specify that the dial-tone frequency to be used with a particular switch (350 and 440 is the default for DEFINITY). 2. Verify that the transfers being performed in the application are still functioning properly.

Repairing Boot-Up Troubles

Boot-up troubles are experienced when the system crashes and reboots itself or when you reboot the system. Table 1-2 lists the indications and possible repair procedures related to boot-up troubles.

Table 1-2. Repairing Boot-Up Troubles

Indication	Corrective Action
Cards are not recognized during boot up.	1. Enter **pkginfo** 2. Make sure the driver software is installed (SP, Tip/Ring, or T1). 3. Check the circuit cards. See "Circuit Card Diagnostics" in Chapter 2, "Diagnostics". 4. Make sure that cards have the proper switch settings and correct placement of terminating resistors if attached to the TDM bus cable.
When the system boots, it displays messages in the message log report or on the console similar to the following message: `Unable to attach shared memory`, `Bad DEVTBL`, and/or `VROP respawning too rapidly`.	1. Stop the voice system. See "Stopping the Voice System" in Chapter 3, "Common System Procedures". 2. Enter **cp /gendb/shmem/devtbl /gendb/shmem/devtbl.old** 3. Enter **rm /gendb/shmem/devtbl** 4. Start the voice system. See "Starting the Voice System" in Chapter 3, "Common System Procedures".
The system displays the following message: `Non-system disk or disk error. Replace and hit any key to continue.`	1. Check the diskette drive and confirm that it is empty. 2. Check the cartridge tape drive and confirm that it is empty. 3. Check the power connections. 4. Reboot the system. See "Rebooting the UNIX System" in Chapter 3, "Common System Procedures".

Continued on next page

Table 1-2. Repairing Boot-Up Troubles — *Continued*

Indication	Corrective Action
The system passes run level four then reboots continuously (rolling reboot).	1. Power off the platform immediately after the system reboots. 2. Remove one optional circuit card (for example, SP, T1, Tip/Ring). 3. Reboot the system. See "Rebooting the UNIX System" in Chapter 3, "Common System Procedures". 4. Repeat Steps 1–3 until the system reboots properly. 5. Replace the circuit cards.
The system is experiencing continuous automatic reboots.	1. Reboot the system. See "Rebooting the UNIX System" in Chapter 3, "Common System Procedures". 2. While rebooting the system, hold down the ENTER key when the system displays the UnixWare graphics. 3. When the system prompts you for a previously saved kernel, enter **unix.old** or enter the name of a kernel that you saved manually at a previous time. This file is created automatically each time the kernel is rebuilt. 4. Check the size of the static kernel by entering **size /stand/unix** If the kernel is larger than 4 Mbytes, remove some of the packages.

Continued on next page

Table 1-2. Repairing Boot-Up Troubles — *Continued*

Indication	Corrective Action
A file system check shows a file system with 0 files, 0 blocks, or 0 free.	1. Verify the disk partition was adequate. See "Initializing the Hard Disk Drives" in Chapter 8, "Installing Base System Software". 2. Restore the system software from the mkimage backup tape. See "Performing a System Restoration" in Chapter 3, "Common System Procedures". If no backup is available, reload the system software. See Chapter 8, "Installing Base System Software", Chapter 9, "Installing the INTUITY CONVERSANT System Software", and Chapter 10, "Installing the Optional Feature Software".
The system hangs after a reboot and the screen is blank.	1. Check the diskette drive and confirm that it is empty. 2. Check the power connections. 3. Check the power supply by watching for hard disk access with the disk access light. 4. Reboot the system. See "Rebooting the UNIX System" in Chapter 3, "Common System Procedures".

Repairing System Installation/Upgrade/Set-Up Troubles

These troubles are experienced during initial installation of the voice system, while upgrading either hardware or software, or when adding additional hardware or software. Table 1-3 lists the indications and possible repair procedures related to these troubles.

Table 1-3. Repairing System Installation/Upgrade/Set-Up Troubles

Indication	Corrective Action
The system cannot initialize the IPCI card.	1. Check for possible conflict with memory and I/O addresses or interrupt conflicts. 2. Log in as **root**. 3. Enter **crash** 4. Enter **strstat** The system displays a message similar to the message shown in Figure 1-1. a. Increase the values to slightly higher than what is listed under the `CONFIG` column. b. If there is anything other than 0's in the `FAIL` column, use the **/etc/conf/bin/idtune** command to increase the tunable parameter. The parameters to tune are NSTREAM, NQUEUE (should be 4 X NSTREAM), NBLK4, NBLK16, NBLK64,NBLK128, NBLK256, NBLK512, NBLK1024, NBLK2048, and NBLK4096. c. After you have changed the tunable parameters, use the **/etc/conf/bin/idbuild** command to rebuild the UNIX kernel. 5. Reboot the system. See "Rebooting the UNIX System" in Chapter 3, ''Common System Procedures''.

```
) strstat
ITEM                    CONFIG    ALLOC    FREE        TOTAL     MAX    FAIL
streams                    106      106       0          592     109       0
queues                     522      522       0         1926     530       0
message blocks              75       57      18        24269      77       0
data blocks                 68       57      11        18271      68       0
link blocks                 16       16       0           16      16       0
stream events                6        4       2            6       6       0

Count of scheduled queues:   0
```

Figure 1-1. strstat Sample Output

Repairing Application-Related Troubles

These troubles are experienced when the voice system is not taking calls or when the voice system is taking calls but the application is not working as expected. There are a number of subgroups for application troubles, such as speech, database, Text-to-Speech, and Speech Recognition. Table 1-4 lists the indications and possible repair procedures related to these troubles.

Table 1-4. Repairing Application-Related Troubles

Indication	Corrective Action
The voice system is ringing but is not answering the telephone or the voice system is busy.	1. Scan the Message Log Report for messages related to the trouble. See Chapter 1, "Getting Started," in *INTUITY™ CONVERSANT® System Version 6.0 System Alarms and Log Messages*, 585-310-182. 2. Enter **display card all** 3. Check the status of all the circuit cards. 4. Check if the application is properly assigned to the channel(s). 5. Make sure the application contains the Answer Phone action.

Continued on next page

Table 1-4. Repairing Application-Related Troubles — *Continued*

Indication	Corrective Action
The voice system answers the call, but does not play any speech.	1. Scan the Message Log Report for messages related to the trouble. See Chapter 1, "Getting Started," in *INTUITY™ CONVERSANT® System Version 6.0 System Alarms and Log Messages*, 585-310-182. 2. Enter **display card all** 3. Verify that the spadm script is not assigned to any channels. 4. Check the status of all the circuit cards. 5. If spadm is assigned, re-assign the channel to the correct script name. See Chapter 3, "Configuration Management," of *INTUITY™ CONVERSANT® System Version 6.0 Administration*, 585-310-591. 6. Place test calls to determine if this is occurring on every channel. 7. If the problem is occurring only on certain channels, this could be a hardware problem. Place the problem channels in a MANOOS state until the card can be replaced. 8. Enter **trace tsm chan all | tee /tmp/trace.out** This sends the trace output to the console and to the file **/tmp/trace.out**. 9. Review the trace output for failure indications or error messages.

Continued on next page

Table 1-4. Repairing Application-Related Troubles — *Continued*

Indication	Corrective Action
All calls are dropped.	1. Scan the Message Log Report for messages related to the trouble. See Chapter 1, "Getting Started," in *INTUITY™ CONVERSANT® System Version 6.0 System Alarms and Log Messages*, 585-310-182. 2. Enter **hstatus all** This will allow you to check the status of the host if this feature is being used. If all sessions are recovering or logging in, this could explain the trouble. 3. Enter **who -rpb** 4. Search for different time stamps on the processes. A recent date different from most of the others may indicate the process respawned. 5. Record the scenario that caused the problem. 6. If the process is specific to a feature package, see the trouble table for that feature package in this chapter.

Repairing 3270 Communication Troubles

Table 1-5 lists the indications and possible repair procedures related to 3270 communication troubles See Chapter 6 of the *3270 User's Guide* for more information on troubleshooting the host interface.

Table 1-5. Repairing 3270 Communications Troubles

Indication	Corrective Action
The system cannot establish connection with the host.	■ Make sure the configuration parameters are set correctly as described in Chapter 4, "Configuration Management," in *INTUITY™ CONVERSANT® System Version 6.0 Administration*, 585-310-591. ■ Ask the host administrator to "bounce" the line.
The **hassign** command displays the following message: `Rejected by the host interface process`	1. Scan the Message Log Report for host related messages. See Chapter 1, "Getting Started," in *INTUITY™ CONVERSANT® System Version 6.0 System Alarms and Log Messages*, 585-310-182. 2. Ensure that the host script has been successfully verified and installed. 3. If host administration commands have recently been issued, it may have caused the host interface process to mark this session as "not available." To verify this, enter **hstatus** 4. Enter **stop_vs** 5. Enter **start_hi** 6. Enter **start_vs**
The **hstatus** command displays the following messages: `host interface is not responding`	This does not always mean the host has stopped communicating. It may indicate that the host process is very active, and has not been able to service your command after 60 seconds. 1. Enter **stop_vs** 2. Enter **start_hi** 3. Enter **start_vs** 4. Scan the Message Log Report for host related messages. See Chapter 1, "Getting Started," in *INTUITY™ CONVERSANT® System Version 6.0 System Alarms and Log Messages* 585-310-182. 5. Enter **trace dip0 | tee /tmp/dip0.out** 6. Check for any host process activity. There could be a 10 minute delay if the sessions have been in recovery for a while. 7. Press DEL to exit trace when you are finished.

Continued on next page

Table 1-5. Repairing 3270 Communications Troubles — *Continued*

Indication	Corrective Action
The **hstatus** command displays the following message: `host interface is not running`	1. Enter **stop_vs** 2. Enter **start_hi** 3. Enter **start_vs** 4. Verify that the host interface process is running. 5. If it is not, enter **sh -x /vs/data/S96hostint** This command will attempt to start the host interface process.
Login or logout does not work.	1. Enter **sb_trace *<session number>*** This will capture a trace of the process. 2. Use **hassign** to assign the host application to the host session. See Appendix A, "Summary of Commands," in *INTUITY™ CONVERSANT® System Version 6.0 Administration*, 585-310-591. Trace data may appear on the screen. 3. If you are testing login, enter **hstatus** If you are testing logout, enter **hlogout *<session number>*** See Appendix A, "Summary of Commands," in *INTUITY™ CONVERSANT® System Version 6.0 Administration*, 585-310-591. 4. After the application has had enough time to complete, press DELETE to stop the trace. 5. To view this data, enter **pg /vs/trans/hostdata/chan*xx*** where *xx* is the host session number.

Continued on next page

Table 1-5. Repairing 3270 Communications Troubles — *Continued*

Indication	Corrective Action
Screens not being dumped through sb_trace	1. Stop the voice system. See "Stopping the Voice System" in Chapter 3, "Common System Procedures". 2. Start the voice system. See "Starting the Voice System" in Chapter 3, "Common System Procedures". **NOTE:** Do not remove the files in **/vs/trans/hostdata/chan*xx*** as the host DIP will not recreate them unless a **stop_vs** and **start_vs** has been done.
Recovery does not work.	1. Enter **sb_te *<session number>*** on an available session. See Appendix A, "Summary of Commands," in *INTUITY™ CONVERSANT® System Version 6.0 Administration*, 585-310-591. 2. Take this session to various screens this application may receive, then press CONTROL X to exit **sb_te**. 3. Enter **sb_trace *<session number used in Step 1>***. 4. Use **hassign** to assign the host application to the host session. This causes the application to jump to the recovery procedure. See Appendix A, "Summary of Commands," in *INTUITY™ CONVERSANT® System Version 6.0 Administration*, 585-310-591. 5. Enter **hstatus** to monitor the status of this session. If it reaches "logged in," the recovery was successful. If not, stop the trace and review the data. 6. Enter **hfree *<session number>*** 7. Repeat all steps for each screen the application may receive.

Continued on next page

Table 1-5. Repairing 3270 Communications Troubles — *Continued*

Indication	Corrective Action
The system detects a hardware fault on the host interface card.	■ If the fault is detected on a PC/XL or FIFO/SIB circuit card, use the **hdiagnose** command to diagnose the connection. ■ If the fault is detected on a Token Ring circuit card, replace the circuit card.

Repairing Speech Recognition Troubles

The following tables attempt to isolate troubles related to the speech recognition functionality on the INTUITY CONVERSANT system. These troubles are separated into general speech recognition troubles (WholeWord and FlexWord™) and accuracy troubles.

Repairing General Speech Recognition Troubles

The following speech recognition troubles (Table 1-6 and Table 1-7) are related to general problems with the WholeWord or FlexWord feature.

Table 1-6. Repairing WholeWord Speech Recognition Troubles

Indication	Corrective Action
The script prompt does not give you time to respond.	Enter **display card *<sp card number>*** 1. Make sure that the functionality assigned to the SP circuit card is WW_RECOG or VOICE+WW_RECOG. See Chapter 3, "Configuration Management," in *INTUITY™ CONVERSANT® System Version 6.0 Administration*, 585-310-591. 2. Make sure the SP circuit card is in the INSERV state. Enter **restore card *<sp_ card_number>*** if the SP circuit card is MANOOS. Enter **diagnose card *<sp_card_number>*** if the SP circuit card is BROKEN. 3. If the SP circuit card or CMP circuit card(s) associated with it fail diagnostics, replace the circuit card. See "Removing a Circuit Card", in Chapter 5, "Replacing, Installing, or Upgrading Circuit Cards". 4. Make sure all CMP circuit cards attached to the SP circuit card providing speech recognition are in the INSERV state. If any CMP circuit card is BROKEN or NOT_DIAG complete the following: a. Make sure the SP has WW_RECOG or VOICE+WW_RECOG assigned. b. Enter **diagnose card *<sp_card_number>*** c. If either the SP board or CMP card(s) fail diagnostics, replace the circuit card. See "Removing a Circuit Card" in Chapter 5, "Replacing, Installing, or Upgrading Circuit Cards".

Continued on next page

Table 1-6. Repairing WholeWord Speech Recognition Troubles — *Continued*

Indication	Corrective Action
The script prompt does not give you time to respond (c*ontinued)*.	d. Check the number of speech recognition resources available. For each CMP circuit card attached to an SP, 6 channels of speech recognition are provided. — Use **SP_Allocate** to check if a recognition resource is available before each `Prompt` and `Collect` statement. — If possible, explicitly reserve the resource. e. Enter **diagnose card *<sp_card_number>*** to make sure the SP circuit card performing speech recognition and the telephone circuit cards indicate `tdm1` in the `OPTIONS` list. f. If the system indicates `no tdm`, install a TDM bus cable between these boards. If the cable is already there and the system indicates “no tdm,” make sure the cable is installed properly. If the problem persists, replace the TDM cable.

Table 1-7. Repairing Speech WholeWord and FlexWord Recognition Troubles

Indication	Corrective Action
The CMP card is in a NOT_DIAG state.	1. Assign speech recognition functionality (WW_RECOG, SW_RECOG, Voice+WW_RECOG or VOICE+SW_RECOG) to the SP circuit card. See Chapter 3, “Configuration Management,” in *INTUITY™ CONVERSANT® System Version 6.0 Administration*, 585-310-591. 2. Enter **diagnose card *<sp_card_number>*** where *<sp_card_number>*is the number of the SP circuit card with the NOT_DIAG CMP circuit card attached.
A BSS error occurred during boot or **start_vs.**	1. Check the circuit cards. See “Circuit Card Diagnostics” in Chapter 2, “Diagnostics”. 2. Check the SP/CMP cable connections.

Continued on next page

Table 1-7. Repairing Speech WholeWord and FlexWord Recognition Troubles — *Continued*

Indication	Corrective Action
SP_INIT failed, and diagnostics did not run.	1. Shut down system. See "Shutting Down the Operating System" in Chapter 3, "Common System Procedures". 2. Reboot the system. See "Rebooting the UNIX System" in Chapter 3, "Common System Procedures". 3. Run the SSP diagnostics again. See "Circuit Card Diagnostics" in Chapter 2, "Diagnostics".
Speech playback stops on the first keyword spoken by voice system.	1. Scan the Message Log Report for SP circuit card related messages. See Chapter 1, "Getting Started," in *INTUITY™ CONVERSANT® System Version 6.0 System Alarms and Log Messages*, 585-310-182. 2. Determine if barge-in is enabled for this prompt by checking the `Announce or Prompt` and `Collect` actions. There may be a touch-tone simulation in the prompt. 3. Disable the prompt if enabled to see if it plays.
A corrupted speech phrase is heard.	When re-recording an active speech phrase, first record the speech into a temporary speech buffer, then copy the phrase into the active phrase.

Continued on next page

Table 1-7. Repairing Speech WholeWord and FlexWord Recognition Troubles — *Continued*

Indication	Corrective Action
Clicking is heard on the line.	1. If the lines are connected to PBX and T/R lines, verify that the lines are configured on the PBX as ECTS (electronic custom telephone service) and *not* POTS (plain old telephone service). 2. Check the outgoing and incoming volume parameters as described in Chapter 6, "Switch Interfaces," of *INTUITY™ CONVERSANT® System Version 6.0 Administration*, 585-310-591. For T1 circuit cards, defaults are ■ ovol = 707 ■ ivol = 1414 For Tip/Ring circuit cards, defaults are ■ ovol = 1000 ■ ivol = 4000 3. Re-record speech if volume levels were too high. 4. If necessary, check the circuit cards. See "Circuit Card Diagnostics" in Chapter 2, "Diagnostics". 5. If other lines are available on the system, connect those to the card exhibiting the noisy/clicking conditions. If the problem goes away, the lines may be bad. If the problem persists, enter **diagnose card *<card number>*** If the card passes and the problem persists, replace the card. See Chapter 5, "Replacing, Installing, or Upgrading Circuit Cards".
SSP diagnostics fail intermittently.	Replace the SSP cables.

Continued on next page

Table 1-7. Repairing Speech WholeWord and FlexWord Recognition Troubles — *Continued*

Indication	Corrective Action
No voice is heard when the script answers the telephone.	1. Enter **display card** to determine the type of Tip/Ring circuit card you have. a. The SSP card should be assigned to WW_RECOG, VOICE+WW_RECOG, SW_RECOG, or VOICE+SW_RECOG functionality or some other SP card in the system should have just VOICE functionality. To change the VRS6 card to TDM mode, see "Changing Voice Equipment Options" in Chapter 3, "Configuration Management," of *INTUITY™ CONVERSANT® System Version 6.0 Administration*, 585-310-591. b. The IVP6 card must be set to "talk" if the SP card is assigned to WW_RECOG or SW_RECOG. There must be another SSP card in the system with VOICE only functionality providing the voice. 2. Make sure the SSP card is in the INSERV state. If MANOOS, enter **restore card *<sp_card_number>***. If BROKEN, complete Steps a and b below: a. Enter **remove card *<sp_card_number>*** b. Enter **diagnose card *<sp_card_number>*** If the SSP card fails diagnostics, replace the card. See "Speech and Signal Processor (AYC43) Circuit Card" in Chapter 5, "Replacing, Installing, or Upgrading Circuit Cards". 3. Make sure that both the SP card performing speech recognition and the telephony cards say `tdm1` in the OPTIONS list. If it says `no tdm`, install a TDM bus cable between these cards. If the cable is already there and it says `no tdm`, check the cable connection by pushing down the cable at each connector to insure proper installation. If the problem persists, replace the TDM cable.

Repairing Speech Recognition Accuracy Troubles

The following speech recognition troubles (Table 1-8) are related to accuracy problems on the voice system with the feature.

Table 1-8. Repairing Speech Recognition Accuracy Troubles

Indication	Corrective Action
The script chooses the wrong option after you speak.	1. Have your script speak back what it recognized (the value of $CI_VALUE) right in the `Prompt and Collect` action. This helps ensure it is not a bug in the script that is making you think that recognition does not work. Perhaps your script is copying the result of $CI_VALUE to a variable and then evaluating the variable. For a YES/NO prompt, the variable must be of type character since it returns “Y” or “N.” 2. If you are using an SDIG recognition type with a length greater than1, you can trace the recognition dip (trace recog_dip) to see what the dip is returning to the script.
The initial timeout is not long enough for the digit string.	1. Make sure the Initial Timeout value in the Prompt and Collect action is long enough for the system to recognize valid keywords in the caller’s speech. 2. If you are having recognition problems on a prompt expecting a digit string, try increasing the initial timeout by three to five seconds.
A CMP or SP card is broken.	1. Enter **diagnose card *<sp_card_number>*** 2. Make sure all the tests pass.
Pressing return does not produce a result.	If a Prompt & Collect statement is using speech recognition and has Speak with Interrupt enabled, the prompt should not exceed 30 seconds. This is because the SP card can only buffer up to 30 seconds worth of input speech for performing recognition. 1. Replace the single Prompt & Collect statement (which had the >30 second prompt) by a series of Prompt & Collect statements all with prompts shorter than 30 seconds. As long as the prompts within the commands are less than 30 seconds long, a series of statements can be used to replace a single Prompt & Collect that has a long prompt.

Continued on next page

Table 1-8. Repairing Speech Recognition Accuracy Troubles — *Continued*

Indication	Corrective Action
Trouble is affecting a specific person and not all callers.	There are people whose voices fall outside of the speech models and will have difficulty getting speech recognition to work for their voice every time. You may want to attempt to collect data samples of the specific audience.
Callers responses are not being recognized.	Make sure the recognition types used are appropriate for what the caller is being asked to say. For example, if the recognition type is SY_N, the system expects callers to say “Yes” or “No.” If the callers are responding with digits instead of the words “Yes” or “No,” accuracy will be very poor. Check your wordlist to make sure the words the caller is speaking are included in the wordlist.
A custom grammar was overwritten.	Reinstall the custom work package if your script uses a custom grammar and the speech recognition package has been reloaded for some reason.
A custom grammar or DIP is inoperable.	1. Check to see if the speech recognition problem you are having is only for prompts that use custom work (a custom grammar or DIP). 2. Contact the developer of your custom work for assistance.
SP card will not download with speech recognition functionality assigned.	1. If using custom grammars, check with the developer of the custom work to make sure the grammar does not exceed design limitations. 2. Make sure the SP circuit card is an AYC2B or an AYC2C by verifying the name of the card on the front plate.
The voice system is too slow.	Use the WholeWord recognition type which is smallest for the expected data. For example, if callers are asked to say 1, 2, 3, or 4, use the SI_5 rather than SDIG with minimum and maximum digits of 1.
The script reprompts MAX_TRIES a number of times.	Check for sufficient speech recognition resources. See the SP_Allocate external action as described in *INTUITY™ CONVERSANT® System Version 6.0 Application Development with Script Builder*, 585-310-763.

Continued on next page

Table 1-8. Repairing Speech Recognition Accuracy Troubles — *Continued*

Indication	Corrective Action
Barge-in does not work when talk over the prompt (applies to WholeWord speech recognition only — FlexWord does not support barge-in).	1. Make sure SR_Prompt is set to "yes." See *INTUITY™ CONVERSANT® System Version 6.0 Application Development with Script Builder*, 585-310-763. 2. Make sure the Prompt and Collect and Announce actions have Prompt With Interrupt set to "yes." 3. Check that your incoming and outgoing speech volume levels are near the recommended levels. See Chapter 6, "Switch Interface Administration," of *INTUITY™ CONVERSANT® System Version 6.0 Administration*, 585-310-591. If these values are changed, complete Steps a and b: a. Stop the voice system. See "Stopping the Voice System" in Chapter 3, "Common System Procedures". b. Start the voice system. See "Starting the Voice System" in Chapter 3, "Common System Procedures". 4. Check that a Tip/Ring circuit card is set to "tdm."
Barge in does not work.	The circuit cards are not set correctly for barge-in (applies to WholeWord speech recognition only). For T1 systems, at least one SP card must be assigned VOICE function and at least one SP card must be assigned WW_RECOG or VOICE+WW_RECOG. For Tip/Ring systems, at least one SP card must be assigned VOICE+WW_RECOG and IVP6 or VRS cards must be set to "tdm." The system can also have an SP card with VOICE only, an SP card for speech recognition set to WW_RECOG, and IVP6 or VRS6 cards set to "tdm."
No barge-in resources available (applies to WholeWord speech recognition only — FlexWord does not support barge-in).	1. Check the return code for SR_Prompt to see if barge-in resources are available (return = 0). 2. If none are available, the call should be handled as touch tone if possible, or sent to an agent. If problem persists, consider adding SP and CMPs cards to increase the available resources.

Continued on next page

Table 1-8. Repairing Speech Recognition Accuracy Troubles — *Continued*

Indication	Corrective Action
Prompt is talked off without saying keywords (applies to WholeWord speech recognition only — FlexWord does not support barge-in).	1. Test the prompt with considerable background noise. 2. Test the prompt again in a quiet environment. 3. Make sure the caller is not using a speakerphone. 4. Investigate whether the prompt needs to be interruptible. If not, set Speak With Interrupt to “no” in the Prompt and Collect action. 5. Make sure SR_Prompt is set early enough in the script. This can be done immediately after the Answer Phone action as shown below: start 1. Answer Phone 2. External Action SR_Prompt Recognize_During_ Prompt = “yes” 3. Announce Speak Without Interrupt Phrase “sil.050”.in -2
You hear stuttered speech during talkoff.	Reduce the load. See “Table 1-30 lists the repair procedures for repairing channel/card state troubles.” below for the procedure.

Repairing ORACLE Database Troubles

Table 1-9 lists troubles related to database problems on the voice system.

Table 1-9. Repairing ORACLE Database Troubles

Indication	Corrective Action
The voice script gets incorrect information or no information from the local database.	1. Scan the Message Log Report for messages related to the trouble. See Chapter 1, "Getting Started," in *INTUITY™ CONVERSANT® System Version 6.0 System Alarms and Log Messages*, 585-310-182. 2. Enter **dbfree** 3. Check the amount of free database space. 4. Enter **trace tsm *dip1* chan all** where *dip1* is the local database dip. 5. Determine whether the database is full. 6. Determine whether an attempt has been made to modify a record without first reading the record. 7. Check to see if the local database table exists and is properly configured with data.
Occasionally, the script does not find an existing database record.	1. Scan the Message Log Report for messages related to the trouble. See Chapter 1, "Getting Started," in *INTUITY™ CONVERSANT® System Version 6.0 System Alarms and Log Messages*, 585-310-182. 2. If no message exists, it is likely the database DIP is not responding to the script request in a timely fashion due to heavy traffic load or system load. Verify the MATCH_FOUND value after the Read Table action. If MATCH_FOUND is -2, the script timed out on the Read Table request. The application should retry the Read Table or prompt caller to call back later.

Continued on next page

Table 1-9. Repairing ORACLE Database Troubles — *Continued*

Indication	Corrective Action
The open cursor limit has been reached.	Increase the number of open cursors to 511: 1. Enter **vi /oracle/dbs/initA.ora** 2. Change line **open_cursors = 255** to **open_cursors = 511** 3. Stop the voice system. See "Stopping the Voice System" in Chapter 3, "Common System Procedures". 4. Stop the database system. See "Stopping the Database System" in Chapter 3, "Common System Procedures". 5. Start the database system. See "Starting the Database System" in Chapter 3, "Common System Procedures". 6. Start the voice system. See "Starting the Voice System" in Chapter 3, "Common System Procedures".

Continued on next page

Table 1-9. Repairing ORACLE Database Troubles — *Continued*

Indication	Corrective Action
The voice script gets incorrect information or no information from the remote database.	1. Scan the Message Log Report for messages related to the trouble. See Chapter 1, "Getting Started," in *INTUITY™ CONVERSANT® System Version 6.0 System Alarms and Log Messages*, 585-310-182. 2. Check the Database Access ID Table under Database Administration in the **cvis_menu** to make sure the Database Access ID is assigned to the remote machine. 3. Enter **ps -ef | grep oraldb** 4. Verify that the name of the remote machine is displayed. 5. Consult the database administrator of the remote machine to determine if the remote database is up and had not been shutdown ungracefully during the period the voice system was running. An example of an ungraceful shutdown of the database is to abort the database using the sqldba command **shutdown abort**. The observed ORACLE 6.0.30 symptom is that the shadow process of reserve in the remote machine to which the voice system remains connected remains alive in memory after the remote database is shutdown gracefully. When the remote database is up again, this shadow process of orasrv is still able to access some of the database data in memory. However, the result would be unexpected. The script is not able to get information correctly from the remote database in this case and you should perform the following Steps a and b. a. Stop the voice system. See "Stopping the Voice System" in Chapter 3, "Common System Procedures". b. Start the voice system. See "Starting the Voice System" in Chapter 3, "Common System Procedures". 6. Consult with the database administrator to see if any changes have been made to the tables on the remote machine. If changes have been made, the effected application must be verified and installed again. See Chapter 9, "Installing the Application," of *INTUITY™ CONVERSANT® System Version 6.0 Application Development with Script Builder*, 585-310-763. 7. Enter **trace tsm chan all *dbdipx*** where *x* is the database ID number (either 2, 3, 4, or 5).

Continued on next page

Table 1-9. Repairing ORACLE Database Troubles — *Continued*

Indication	Corrective Action
ccasum never finishes its cron job.	1. Determine if you are transferring to more than 100 numbers. If so, kill the cron job by completing the following Steps a through c: a. Enter ***ps -ef | grep ccasum*** b. Search for the PID for ccasum. It is located in the second column from the left. c. Enter **kill -9 *<pid #>***, where *<pid #>* is the parent process id (PID) number. 2. Create an index for ccasum. a. Log on to sqlplus as **sti/sti**. b. Enter **create index cca_idx on cca(phone_num);** c. Enter **quit** 3. Enter **/vs/bin/util/ccasum** when the call traffic is light. 4. Enter **/vs/bin/util/ccadel** when ccasum is finished.
Concern about memory usage.	Decrease the value of nbuf in the **/vs/data/spchconfig** file.
Need to increase nbuf.	1. Edit **/etc/conf/mtune.d/shm** to change the SHMMAX value from 4194304 (4-Mbyte) to 6291456 (6-Mbyte). 2. Edit **/etc/conf/cf.d/mtune** to change the SHMMAX value from 4194304 to 6291456. 3. Run **/etc/conf/bin/idtune SHMMAX 6291456** 4. Run **/etc/conf/bin/idbuild -B** 5. Edit **/vs/data/spchconfig** to change the nbuf value to 360. 6. Reboot the system. See "Rebooting the UNIX System" in Chapter 3, "Common System Procedures".

Repairing Script Builder Troubles

Table 1-10 and Table 1-11 provide information on troubles related to the Script Builder package.

Table 1-10. Repairing Script Builder Troubles

Indication	Corrective Action
Messages are cut off.	Add a few seconds of initial silence (0.2 to 0.5 seconds) to the beginning of the message to be played. Another way to avoid missing any segment of a message is to construct a phrase consisting of a few seconds of silence and play that phrase first.
The terminal is locked-up.	Use the following key sequence to release your terminal keypad: CONTROL J **stty sane** CONTROL J
You receive the message `No Space On Root File System.`	1. Press EXIT from Script Builder. 2. Clean up the root file system. Try to free a minimum of several hundred free blocks. 3. Re-enter Script Builder with your application. You may find that everything is functioning properly with your application. You may be able to continue right where you left off and just retype any previous changes that were not saved. However, depending on where you were in the application when root ran out of space, some files may be corrupted. 4. If Script Builder fails completely with this application, complete the following Steps a and b: a. Remove the transaction part of the application by pressing REMOVE in the Script Builder Applications screen. b. Restore it from a backup. See *INTUITY™ CONVERSANT® System Version 6.0 Application Development with Script Builder*, 585-310-763.

Continued on next page

Table 1-10. Repairing Script Builder Troubles — *Continued*

Indication	Corrective Action
There is no speech output.	1. Make sure the phrase actually exists. If it does not, record it. See the Speech Administration screen in Chapter 7, "Producing Speech," of *INTUITY™ CONVERSANT® System Version 6.0 Application Development with Script Builder*, 585-310-763. 2. Make sure the OVOL and IVOL parameters are correctly set in the Switch Interface screen. See Chapter 6, "Switch Interfaces," of *INTUITY™ CONVERSANT® System Version 6.0 Administration*, 585-310-591. 3. Enter **display card sp** 4. Check the status of the SP cards.
Host sessions recover repeatedly.	1. Scan the Message Log Report for messages related to the trouble. See Chapter 1, "Getting Started," in *INTUITY™ CONVERSANT® System Version 6.0 System Alarms and Log Messages*, 585-310-182. 2. Make sure a Transaction Base screen has been specified. 3. Make sure the Login and Recovery sequences both leave the host session at a Transaction Base screen.
A ring no answer occurs for an application that has a host interface.	1. Scan the Message Log Report for messages related to the trouble. See Chapter 1, "Getting Started," in *INTUITY™ CONVERSANT® System Version 6.0 System Alarms and Log Messages*, 585-310-182. 2. Check the host timeout value and verify that the host response time is not exceeded.

Repairing Script Builder FAX Actions Troubles

The following table provides information about trouble related to the Script Builder FAX Actions package. See these tables for appropriate corrective action if a trouble with Script Builder FAX Actions arises.

Table 1-11. Repairing Script Building FAX Actions Troubles

Trouble Indication	Corrective Action
The ASCII to TIFF conversion process failed.	The << SBFAX006 SBF_ASCTOTIFF_FAILED >> line above and similar lines throughout this chapter are explain message identifiers and mnemonics that can be used as arguments to the explain function which is used to obtain the explain text associated with the error message. For example, to obtain the information below, enter at the UNIX shell prompt the command **explain SBFAX006**. The script made a request to transmit a text file to the caller. Before the text file can be sent, it must be converted into the appropriate format. This conversion failed for the text file specified. Most likely, the file requested is not suitable for transmission. Check to make sure the file is either a text file or a FAX file entered through the Fax Response Workspace.
The FAX combine process failed.	The system attempted to combine two or three files into a single FAX file. This operation failed. For this operation to be completed, file conversions are performed to get the information into a form suitable for transmission. Most likely, one or more of the files requested are not suitable for transmission. Check to make sure the files requested are either text files or FAX files entered through the Fax Response Workspace.
The FAX cover page process failed.	The script request to join two files into a single FAX file (possibly for use as a cover page) failed. For this operation to be completed, file conversions are performed to get the information into a form suitable for transmission. Most likely, one or both of the files requested are not suitable for transmission. Check to make sure the files requested are either text files or FAX files entered through the Fax Response Workspace.
FAX file not found.	The script request to transmit a FAX file to the caller failed because the FAX file requested could not be found. Verify that the FAX file exists either in the Fax Response Workspace or at the full path specified in the script. The caller did not receive the FAX requested. Consider manually transmitting the FAX message requested by the caller using the delivery number contained in the error message.

Continued on next page

Table 1-11. Repairing Script Building FAX Actions Troubles — *Continued*

Trouble Indication	Corrective Action
Text file not found.	The script request to transmit a file to the caller failed because the file requested could not be found. Verify that the file exists and was specified in the script with the appropriate path. The caller did not receive the FAX they requested. Consider transmitting it manually to the caller using the delivery number contained in the error message.
The FAX send process failed.	The script request to transmit one or two FAX messages to the caller failed. The return code reported in the error message indicates the result of the delivery request. This error may be the result of the failure of earlier FAX Actions. For example, if another FAX Action failed and the script did not check its return value, it is likely that the associated FAX_Send action would also fail. Consult the list below to determine the source of the problem. — 6003 FAX file missing — 6105 FAXMGR not running/FAX channels not in service/No phone lines attached
The execute UNIX command failed.	The script request to execute a UNIX command or shell script failed. Most likely, the problem is with the command or shell script. Check that the command or shell script that was attempted works when executed manually. If it does, make sure that its full path name is provided to the script.

Repairing Primary Rate Interface Troubles

The following troubles (Table 1-12) are related to the Primary Rate Interface (PRI) feature. It details what action should be taken if the D- or B-channels do not come into service as expected.

Table 1-12. Repairing PRI Troubles

D-Channel Status	B-Channel Status	Trouble Indication	Corrective Action
D-MANOOS	MANOOS	Channels have not been put into service.	Change the state of the channels to inserv.
FOOS	FOOS	The T1/E1 facility has not established physical connectivity or is experiencing a problem.	Could be due to one of several reasons.This is normal for about 10–20 seconds after restoring T1/E1 channels. If the condition persists, the System Message Display screen should contain an error message numbered TWIP013 through TWIP018 that indicates the nature of the problem. See the explanation of error messages numbered TWIP013 through TWIP018 in Chapter 2, “Message Log Entries,” in *INTUITY™ CONVERSANT® System Version 6.0 System Alarms and Log Messages*, 585-310-182.
D-MANOOS	HWOOS	The D-channel has not been put into service.	Change the state of the D-channel to inserv.
D-HWOOS	HWOOS	The SP card assigned to PRI is not in service.	1. Restore SP circuit card to service. 2. If SP circuit card is broken, diagnose it. See ““Circuit Card Diagnostics,”” in Chapter 2, “Diagnostics”. 3. If the card is bad, replace it. See “Speech and Signal Processor (AYC43) Circuit Card” in Chapter 5, “Replacing, Installing, or Upgrading Circuit Cards”.

Continued on next page

Table 1-12. Repairing PRI Troubles — *Continued*

D-Channel Status	B-Channel Status	Trouble Indication	Corrective Action
D-NETOOS	HWOOS	The D-channel has not yet established connection.	1. If the D-channel does not change after 5 minutes, check that the card with the D-channel is connected to the correct port on the switch. 2. Make sure that the switch is provisioned to invert the HDLC data and D channel data if the framing/coding used is D4ZCS. Data is not inverted if the framing/coding is ESFB8ZS.
D-INSERV	MANOOS	The B-channel has not been put into service.	Change the state of the B-channel to inserv.
D-INSERV	NETOOS	The B-channel has not been put into service by the switch.	This condition can last several seconds after the D-channel comes into service. If the condition persists, check the configuration of the switch.
FOOS	HWOOS	The T1/E1 card that contains the D-channel is having problems.	See the previous case where D-channel is Foos.
D-NETOOS	PENDING	The D-channel has lost connection. Active call on the B-channel is being kept up.	See Chapter 2, “Message Log Entries,” in *INTUITY™ CONVERSANT® System Version 6.0 System Alarms and Log Messages*, 585-310-182 for indication of why D-channel connection was lost.

Continued on next page

Table 1-12. Repairing PRI Troubles — *Continued*

D-Channel Status	B-Channel Status	Trouble Indication	Corrective Action
D-HWOOS	PENDING	The SP card assigned to PRI is not in service. An active call on the B-channel is being kept up.	1. Restore the SP circuit card to service. 2. If SP circuit card is broken, diagnose it. See "Circuit Card Diagnostics," in Chapter 2, "Diagnostics". 3. If the card is bad, replace it. See "Speech and Signal Processor (AYC43) Circuit Card" in Chapter 5, "Replacing, Installing, or Upgrading Circuit Cards".
Foos	PENDING	The T1/E1 card that contains the D-channel is having link problems. Active call is being kept up on the B-channel.	See the previous case where the D-channel is Foos.
D-INSERV	ON-HOOK	Incoming calls to voice system are not answered. The switch reports an error that indicates the voice system is attempting to negotiate to a nonexistent channel.	The interface ID Provisioning on the switch may not be correct. 1. Make sure the card that has the D-channel is set for an Interface ID of 1. 2. Make sure the circuit cards without the D-channel are set for an Interface ID of 2 through 5.
D-INSERV	ON-HOOK	Outgoing calls are rejected by the switch. The switch reports an error indicating an invalid information element or invalid service.	Make sure that you have correctly specified the service type (using the "ISDN_Service" function in Script Builder or the "setparam" script instruction).

Repairing Form Filler Plus Troubles

The following troubles (Table 1-13) are related to the Form Filler Plus feature.

Table 1-13. Repairing Form Filler Plus Troubles

Trouble Indication	Corrective Action
■ Form Filler Coding has failed for a reason other than voice coding timeouts (that is, Form Filler Code fails due to voice coding failure – return code -1). ■ FF_Code has been called more than 10 times in the call session (return code -20). ■ Form Filler Code fails due to insufficient space on the speech file system (return code -555).	1. Stop the voice system. See "Stopping the Voice System" in Chapter 3, "Common System Procedures". 2. Start the voice system. See "Starting the Voice System" in Chapter 3, "Common System Procedures". 3. Test the Form Filler Plus database by calling an application script and starting a test record. 4. Check all Form Filler Plus application scripts to confirm that they are not calling the FF_Code action more than 10 times with the Re-Record Phrase option set to "no." 5. Verify that valid script ID is being used for each FF_Code and that the Script ID is always the same for FF_Code in a single application script. 6. Verify that FF_Store is being called by the script only once per call session and that at least one call to FF_Code precedes the call to FF_Store. 7. Check the Speech Space Statistics in the Form Filler Call Record Summary Report screen. If the speech filesystem is low on space, transcribe and delete more records using the Form Retriever (that is, the transcription script). If disk space shortages occur frequently, allot more disk space to speech storage. See Chapter 5, "Reports," of *INTUITY™ CONVERSANT® System Version 6.0 Administration*, 585-310-591, for additional information on the Form Filler Call Record Summary Report. **NOTE:** The system sets the maximum number of speech phrases that may be recorded at installation. See *INTUITY™ CONVERSANT® System Version 6.0 System Description*, 585-310-241, for additional information.

Repairing Text-to-Speech Troubles

The following troubles (Table 1-14) are related to the Text-to-Speech (TTS) feature.

Table 1-14. Repairing Text-to-Speech Troubles

Indication	Corrective Action
Text is not spoken during playback of a PROMPT that is text.	1. Check the outgoing text volume in the Analog/Digital Interface screen. See Chapter 6, "Switch Interfaces," of *INTUITY™ CONVERSANT® System Version 6.0 Administration*, 585-310-591, for changing the volume level. 2. To verify the card is in the INSERV state, enter **display card *<sp card number>*** where *<sp card number>* is the number of the SP card allocated for TTS. 3. Verify the SP card is assigned to the function TTS. See "Assigning Functions to SP Cards" in Chapter 3, "Configuration Management," of *INTUITY™ CONVERSANT® System Version 6.0 Administration*, 585-310-591. 4. Check the return code of either the **tts_file** external function or the particular **say** instruction. If the return value is -2, the SP card may be under the maximum load it can handle for TTS (six simultaneous channels per SP). 5. Make sure the tts_dip is running. Enter **ps -ef** 6. Make sure the TDM cable connects the SP card with the Tip/Ring circuit cards on the system. 7. Stop the voice system. See "Stopping the Voice System" in Chapter 3, "Common System Procedures". 8. Start the voice system. See "Starting the Voice System" in Chapter 3, "Common System Procedures".

Continued on next page

Table 1-14. Repairing Text-to-Speech Troubles — *Continued*

Indication	Corrective Action
Text is not spoken during playback of a TTS file.	1. Check the outgoing text volume in the Analog/Digital Interface screen. See Chapter 6, "Switch Interfaces," of *INTUITY™ CONVERSANT® System Version 6.0 Administration*, 585-310-591, for changing the volume level. 2. Enter **ps -ef** to verify that the **/vs/bin/vrs/tts_dip** process is running on the system. 3. Check the Script Builder function **tts_file** for the particular application and ensure that the function has been correctly configured. See Chapter 7, "Defining the Transaction," of *INTUITY™ CONVERSANT® System Version 6.0 Application Development with Script Builder*, 585-310-763. 4. Verify where and what file the **tts_dip** external function is attempting to access. The file is located in **/vs/data/tts_file** directory by default. 5. Verify that the file contains data to be synthesized. 6. Make sure the text file does not have unusual characters. 7. Create a test file to be spoken. 8. Check the **tts_dip** external function in the application and verify that argument 2 of the external function contains the full directory path of the file to be synthesized.
TTS speech is being played too fast or too slow.	Check the speaking rate of the text being played. The default speaking rate is the rate value of 2. See Appendix D, "Advanced Text-to-Speech Features," in *INTUITY™ CONVERSANT® System Version 6.0 Speech Development, Processing, and Recognition*, 585-310-762.

Continued on next page

Table 1-14. Repairing Text-to-Speech Troubles — *Continued*

Indication	Corrective Action
Addresses, telephone numbers, fractions and proper names not being properly pronounced.	1. Verify that the text is grammatically correct. 2. Attempt to activate a "class detector" for the appropriate text class (address, proper names, telephone numbers, or proper names) that is not being properly pronounced. See Appendix D, "Advanced Text-to-Speech Features" of *INTUITY™ CONVERSANT® System Version 6.0 Speech Development, Processing, and Recognition*, 585-310-762.
Assigning the TTS function to the SP card fails.	1. Verify that the SP card is an AYC9 SP card. The output for **display card *<sp card number>*** should be "SP-8." 2. Make sure that the SP card is in the MANOOS state before attempting to assign the TTS function to the card. 3. Verify that the system recognizes that the SP card exists in the system.
The SP (AYC9) card is not recognized by the system.	1. Check the switch settings for the AYC9 SP card and ensure there are no address/interrupt conflicts. 2. Verify that the SP card is properly connected to the TDM bus. 3. Verify that the other cards are configured correctly for communication on the TDM bus (for example, TDM resistors, etc). 4. Install a new SP card if available. See "Speech and Signal Processor (AYC43) Circuit Card" in Chapter 5, "Replacing, Installing, or Upgrading Circuit Cards".
You run out of disk space while loading the TTS package.	1. Check the remaining disk space to ensure that the root slice has at least 7 Mbytes of free space to install the TTS package. 2. Check if there are any files that can be temporarily moved to another area of the disk or removed.

Continued on next page

Table 1-14. Repairing Text-to-Speech Troubles — *Continued*

Indication	Corrective Action
The TTS pronunciation of text output is grammatically incorrect.	1. Verify that the text being synthesized contains appropriate sentence structure using capitalization, commas, and action verbs. 2. See Appendix D, "Advanced Text-to-Speech Features" in *INTUITY™ CONVERSANT® System Version 6.0 Speech Development, Processing, and Recognition*, 585-310-762, for escape sequences that can improve the pronunciation.
Script Builder fields are not correctly spoken using TTS.	1. Verify that the `Type` field in the Announce screen is set for TEXT. 2. Verify that the `Format` field of the Announce screen is preceded with an "A" for speaking fields in the TTS format. See Appendix D, "Advanced Text-to-Speech Features" in *INTUITY™ CONVERSANT® voice system Version 5.0 Speech Development*, 585-310-228, for changes to the ANNOUNCE action for TTS.
Talkoff is inhibited during TTS playback.	1. Utilizing the **tts_file** external function complete the following Steps a and b: a. Verify that argument one of the external function for **tts_file** has the numeric value of "1" to enable talkoff. b. Check the return value for the **tts_file** external function. See Appendix D, "Advanced Text To Speech Features" in *INTUITY™ CONVERSANT® System Version 6.0 Speech Development, Processing, and Recognition*, 585-310-762, for the possible reasons for the return code. 2. Utilizing the Announce action, check the `Announce` action and ensure the `Speak with Interrupt` option is set to "Yes".
Sentences using TTS are spoken as if they are run together.	Verify that there is a space after the last character in a complete sentence on the lines within the Announce action. See "Hints for Writing Applications Using TTS" in *INTUITY™ CONVERSANT® System Version 6.0 Speech Development, Processing, and Recognition*, 585-310-762.
Fields using TTS are spoken as if they are run together.	Insert a silence phrase (/!si50) at the beginning of a sentence to make it sound more natural.

Continued on next page

Table 1-14. Repairing Text-to-Speech Troubles — *Continued*

Indication	Corrective Action
Text that should be spoken in sentence format is being spelled.	1. Verify that the text that is being spelled is *not* in all capital letters. Text in all capital letters will be spelled. 2. Check all escape sequences for correctness.
The state of the SSP card changes to BROKEN after executing an application that uses TTS.	1. Check the text that is being spoken in the application and ensure all escape sequences are being properly implemented. See Appendix D, "Advanced Text-to-Speech Features" in *INTUITY™ CONVERSANT® System Version 6.0 Speech Development, Processing, and Recognition*, 585-310-762. 2. Ensure that escape sequences that are inserted within the text are adjacent to some text and not surrounded by space. 3. Diagnose the SSP. See "Circuit Card Diagnostics" in Chapter 2, "Diagnostics".
TTS quits speaking.	1. Make sure all escape sequences are utilized properly (especially the /!si and /!sf sequences). 2. Check that the amount of silence with the escape sequences are either greater than 0 or less than 100. For example, /!si100 will cause TTS to quit talking. See "Advanced Text-to-Speech Features" in *INTUITY™ CONVERSANT® System Version 6.0 Speech Development, Processing, and Recognition*, 585-310-762, for information on the use of these instructions. 3. Make sure the text does not have considerable white space or commas in a row (,,,,,).

Repairing ASAI Troubles

The trouble resolution information for ASAI covers the following areas of ASAI operation:

- General ASAI troubleshooting
- Domain troubles
- Channel trouble
- Digital link troubles
- Trace utility information

General ASAI Troubleshooting

Several tools are available to diagnose problems with the ASAI system, including:

- System messages
- STATUS field of the Domain Administration and Channel Administration screens
- Trace utility

If you suspect or are experiencing problems with the ASAI system, perform the following procedure:

1. Display the Message Log Report screen as described in Chapter 5, “Reports”, of *INTUITY™ CONVERSANT® System Version 6.0 Administration*, 585-310-591.

   NOTE:
   ASAI system messages are numbered from ASAI001 through ASAI031 and are described in Chapter 2, “Message Log Entries” of *INTUITY™ CONVERSANT® System Version 6.0 System Alarms and Log Messages*, 585-310-182. Follow the instructions given for the appropriate system message.

2. If an ASAI system message appears in the Message Log Report, display the Domain Administration screen.
3. In the Domain Administration screen, check the STATUS field of each domain to confirm that it is inserv.

   If a domain is not in an inserv state, see Table 1-15 for additional information.

Table 1-15. Repairing ASAI Domain Troubles

Status	Indication	Corrective Action
MANOOS	(manual out of service) Domain has not been placed into service.	Use the ENABLE key to place the domain into service.
FOOS	(facility out of service) The ASAI digital link is not operating.	This could be due to several factors. See Table 1-19.

Continued on next page

Table 1-15. Repairing ASAI Domain Troubles — *Continued*

Status	Indication	Corrective Action
BROKEN	(broken) A virtual channel could not be allocated for the service assigned to this domain.	1. Verify that the correct service is assigned to the domain. For the voice system ACD domain, this service must be voice system. 2. Use the DISABLE key to return the state to manoos. 3. Use the ENABLE key again.
INITING	(initializing) The service assigned to the domain is failing initialization.	1. Verify that the correct service is assigned to the domain. For the voice system ACD domain, this service must be voice system. 2. Use the DISABLE key to return the state to manoos. 3. Use the ENABLE key again.
NETOOS	(network out of service) ASAI link is up, but attempts to initialize the domain are failing.	This could be caused by several factors, including: ■ The wrong domain type is specified (for example, ACD or VDN). ■ The wrong extension is specified. ■ The domain is not administered on the PBX. 1. See Chapter 2, “Message Log Entries”, in *INTUITY™ CONVERSANT® System Version 6.0 System Alarms and Log Messages*, 585-310-182, for information on ASAI017 through ASAI024 system messages numbered. 2. Use the DISABLE key to return the state to manoos. 3. Check these parameters. 4. Use the CHANGE key to change a domain parameter is necessary. 5. Use the ENABLE key again.

If all domains are inserv, complete the following Steps a and b:

a. Display the Channel Administration screen.

b. In the Channel Administration screen, check the `STATUS` field of each channel to confirm that it is in a `LOGIN` state.

   If any channels are not in a `LOGIN` state, see Table 1-17 for additional information.

4. If the above steps do not resolve the problem, check the following if you are diagnosing either an existing system which was working previously or a new system:

   - Verify that all voice equipment (Tip/Ring cards, T1 cards, SP cards, etc) is functioning properly.
   - Verify that the lines to the Tip/Ring or T1 cards are functioning properly.
   - Verify that the administration of the PBX or voice system has not changed. You can verify the administration of the PBX values through the Switch Interfaces screen. See Chapter 6, “Switch Interfaces,” of *INTUITY™ CONVERSANT® System Version 6.0 Administration*, 585-310-591, for information.

5. If you are diagnosing a new system and the procedures in Step 4 do not point to the source of the problem, check the following:

   - Verify that all domains are administered properly.
   - Verify that the PBX is properly routing calls to the voice system ACD split, if applicable.
   - If using a host, verify that there is not a problem with the host.
   - Trace utility.

Repairing ASAI Domain Troubles

Use the following table if, after following the steps to administer a domain, the domain is not in service. In most cases when the domain is not in service, system messages ASAI017 – ASAI024 appear in the Message Log Report. The Message Log Report screen is described in Chapter 1, “Getting Started,” of *INTUITY™ CONVERSANT® System Version 6.0 System Alarms and Log Messages*, 585-310-182. See Table 1-16 for assistance in determining the cause of the trouble.

Table 1-16. Domain Failure Causes

Cause	Corrective Action
Can't start script,state=11	Cannot start service assigned to domain. You may be attempting to monitor more domains than the system is able to handle under the current call loads. See Chapter 4, "Feature Packages," of *INTUITY™ CONVERSANT® System Version 6.0 Administration*, 585-310-591, for information on ASAI system specifications.
Script not responding,state=12	Service assigned to domain is not responding. 1. Verify that the correct service is assigned to the specified domain. If it has, then the service is not responding correctly. 2. Make sure that the service follows the guidelines described in *INTUITY™ CONVERSANT® System Version 6.0 Administration*, 585-310-591.
Rejected by switch,cause=0	Invalid number or domain. The domain value is neither a valid VDN or a valid ACD split extension.
Rejected by swtich,cause=2	Resources not available. The request cannot be executed because the switch limit would be exceeded for the maximum number of monitored domains.
Rejected by switch,cause=3	The user has not subscribed for the requested capability.
Rejected by switch,cause=7	Service or option not implemented. The given domain is already being monitored.
Rejected by switch,cause=10	Invalid association. The association is already in existence.
Rejected by switch,cause=24	Switch not administered correctly. The domain value is an adjunct controlled split or a vector controlled split.
Rejected by switch,cause=26	Switching equipment congestion. The switch is not accepting the request at this time because of processor overload. The adjunct or user may wish to retry the request but should not do so immediately.
Rejected by switch,cause=X	Domain cannot be monitored for other reasons. Verify that the Type and Extension are correctly administered for the specified domain. See Table 1-20 for other cause values.

Repairing ASAI Channel Troubles

Use the following table, if after administering and logging in an ASAI channel, the domain is not in service. In most cases when the ASAI channel is not logged in, system messages ASAI009 – ASAI016 appear in the Message Log report.

Table 1-17. Repairing ASAI Channel (voice system Agent Line) Troubles

Status	Indication	Corrective Action
MANOOS	(manual out of service) The channel has not been placed into service.	Use the ASSIGN key in the Voice Equipment screen to change state to inserv.
FOOS	(facility out of service) The line is not functional.	This could be the result of several factors, including: ■ The line is not connected to PBX (or the wiring is bad). ■ No loop current is detected on line.
BROKEN	(broken) A possible malfunction has been detected on the line.	Diagnose the card. See "Circuit Card Diagnostics" in Chapter 2, "Diagnostics". If the diagnostics fail, replace the circuit card. See Chapter 5, "Replacing, Installing, or Upgrading Circuit Cards".
LOGOUT	(logged out) The channel has not been administered for log in.	Use the LOGIN key to log in the channel.

Continued on next page

Table 1-17. Repairing ASAI Channel (voice system Agent Line) Troubles — *Continued*

Status	Indication	Corrective Action
HWOOS	(hardware out of service) The channel cannot be logged in because ASAI digital link is not operating.	This could be a result of several factors. See Table 1-19 for additional information.
NETOOS	(network out of service) The ASAI link is up, but attempts to log in the channel are failing.	This could be caused by several factors, including: ■ The wrong extension is specified. ■ The extension does not exist. ■ The extension does not belong to the voice system ACD hunt group. 1. See system messages ASAI009–ASAI016 in Chapter 2, "Message Log Entries," in *INTUITY™ CONVERSANT® System Version 6.0 System Alarms and Log Messages*, 585-310-182. 2. Use the LOGOUT key to return the state to logout. 3. Use the CHANGE key to change the extension if necessary. 4. Try the LOGIN key again.
NONEX	(nonexistent) The card is not physically linked to the channels.	If desired, you may leave the channels in a nonex state. If you leave the channels in a nonex state, unassign the channels as a voice system agent (by pressing REMOVE in the Channel Administration screen). If you wish, you may renumber the channels in the Change A Channel Entry screen. Otherwise, add the card to the channels to physically link the card to the channel.

Table 1-18 lists possible channel login failure cases.

Table 1-18. Channel Login Failure Causes

Cause	Corrective Action
No VIS Domain, cause=1	An ACD domain has not been administered (on the voice system) with the service "VIS." Add and enable an ACD type domain with service "VIS." See *INTUITY™ CONVERSANT® System Version 6.0 Administration*, 585-310-591.
Rejected by switch, cause=0	The extension assigned to the channel on the voice system may be incorrect. Correct the extension assignment for the channel.
Rejected by switch, cause=0	An invalid ACD split or channel extension value is designated in the request.
Rejected by switch, cause=2	The request cannot be executed because of a lack of available switch resources.
Rejected by switch, cause=3	The user has not subscribed for the requested capability.
Rejected by switch,cause=7	Login is not available for the extension entered as the split extension. **NOTE:** An invalid split extension can be a valid non-split extension (such as a channel extension) on the switch, but it will still be denied.
Rejected by switch, cause=10	Invalid association. The association is already in existence.
Rejected by switch, cause=21	Channel logged in to another split. The channel is already logged in to the maximum number of splits.
Rejected by switch, cause=22	Incorrect number of channel login digits. The channel is not logged in (applies only to the channel login).
Rejected by switch, cause=24	The split is not administered correctly. A request has been denied by the switch to log in a member of the auto-available split.
Rejected by switch, cause=26	Switching equipment congestion. The switch is not accepting the request at this time because of processor overload. The adjunct or user may wish to retry the request, but should not do so immediately.
Rejected by switch, cause=X	The PBX cannot log in the channel for other reasons. See Table 1-20 for other cause values.

Repairing ASAI Digital Link Troubles

The ASAI digital link is not operating if

- It remains in the foos state after following the steps to administer and enable a domain.
- It remains in the hwoos state after administering a channel as a voice system agent line and logging it in.
- You receive a system message indicating the ASAI link is down while attempting to ENABLE a domain or LOGIN a channel.

If you encounter one of these conditions, select `Show Status of ASAI link` while in the ASAI Administration menu to display the current status of the link. Then see Table 1-19 to resolve the trouble.

NOTE:
If you cannot establish the ASAI link to the switch, check the CRV Length of the extension associated with the BRI link. This parameter must be set to 2, not 1.

Table 1-19. Repairing ASAI Digital Link Troubles

Status	Indication	Corrective Action
OFFLINE	The IPCI card is in an off-line mode.	Select `initialize IPCI Board` to place the card on-line.
L1 DOWN, L2 DOWN	The ASAI physical link is down.	1. Check the ASAI link wiring between the voice system and the PBX. 2. If the wiring is correct, diagnose the IPCI card. See "Circuit Card Diagnostics" in Chapter 2, "Diagnostics". 3. If the card is bad, replace it. See Chapter 5, "Replacing, Installing, or Upgrading Circuit Cards".
LI UP, L2 DOWN	The ASAI physical link is correct, but the link layer is down.	1. Make certain the ASAI port on the PBX is administered with Fixed TEI=y and TEI=3. 2. If TEI parameters are correct, diagnose the IPCI card. See "Circuit Card Diagnostics" in Chapter 2, "Diagnostics". 3. If the card is bad, replace it. See Chapter 5, "Replacing, Installing, or Upgrading Circuit Cards".

Continued on next page

Table 1-19. Repairing ASAI Digital Link Troubles — *Continued*

Status	Indication	Corrective Action
PUMPING	The IPCI card is in the process of initialization.	This should be a temporary state. If the card stays in this state, take the card OFFLINE and initialize it. If this unsuccessful, try restarting the system or replacing the card.
AWAITING GOING OFFLINE	The IPCI card is attempting to go off-line.	This should be a temporary state. If the card stays in this state, take the card OFFLINE and initialize it. If this is unsuccessful, try restarting the system or replacing the card.
FAULTY HARDWARE, UNKNOWN, UNDETERMINED	The IPCI card is in an unknown state.	The IPCI circuit card is either nonexistent or malfunctioning. Assuming the card is installed complete the following: 1. Take the circuit card OFFLINE. 2. Initialize the circuit card. 3. Diagnose the circuit card. See "Circuit Card Diagnostics," in Chapter 2, "Diagnostics". 4. If you are unable to successfully initialize and diagnose the card, replace the card. See Chapter 5, "Replacing, Installing, or Upgrading Circuit Cards".
L1 UP, L2 UP	The ASAI link should be operative.	If the domain is still foos, do the following: 1. Take the IPCI circuit card OFFLINE. 2. Initialize the circuit card. 3. If the problem persists, diagnose the circuit card. See "Circuit Card Diagnostics" in Chapter 2, "Diagnostics". If the card is bad, replace it. See in Chapter 5, "Replacing, Installing, or Upgrading Circuit Cards". If the diagnose is successful, reboot the system. See "Rebooting the UNIX System" in Chapter 3, "Common System Procedures".

Correlation Between Voice System and PBX Cause Values

Table 1-20 correlates the voice system ASAI cause values with the DEFINITY Generic 3i coding standards and values.

NOTE:
The VIS Value is the number returned in the Cause Value field of the ASAI Script Builder actions.

Table 1-20. Correlation Between Voice System and DEFINITY Generic 3i Coding Standards and Values

VIS Value	DEFINITY Value	Description
0	CS0/28	Invalid number or domain; the domain value is not a valid VDN or a valid ACD split extension.
1	CS0/111	Protocol error; the Q.932 protocol has been violated.
2	CS3/40	Resources not available; the request cannot be executed because the switch limit would be exceeded for the maximum number of monitored domains.
3	CS0/50	The user has not subscribed for the requested capability.
4	CS3/79	The service or option is not implemented.
5	CS0/96	A mandatory information element is missing.
6	CS0/100	The contents of an information element are invalid.
7	CS3/63	Login is not available for the extension entered as the split extension. **NOTE:** An invalid split extension can be a valid non-split extension (such as a channel extension) on the switch, but it will still be denied.
8	CS3/86	Calls with the requested identity have been terminated.
9	CS0/98	The message is not compatible with the call state.
10	CS0/81	Invalid association; the association is already in existence.
11	CS3/80	The options are incompatible.
12	CS0/102	Recovery on timer has expired.

Continued on next page

Table 1-20. Correlation Between Voice System and DEFINITY Generic 3i Coding Standards and Values — *Continued*

VIS Value	DEFINITY Value	Description
13	CS3/15	The agent is not logged in.
14	CS3/11	The extension assigned to the channel on the voice system does not belong to the ACD split assigned to the voice system service. Correct the extension assignment for the channel.
15	CS0/17	The specified extension currently has an active call. A channel cannot be logged in when it is off-hook.
16	CS0/18	No user is responding.
17	CS3/43	Permission is denied.
18	CS3/87	Internal switch audit.
19	CS3/27	Out of service.
20	CS3/12	The agent state is inconsistent with the request.
21	CS3/13	The channel is logged in to another split. The channel is already logged into the maximum number of splits.
22	CS3/14	The number of channel login digits is incorrect. The channel is not logged in (applies only to channel login).
23	CS3/16	The options are in the same state.
24	CS3/41	The split is not administered correctly. A request has been denied by the switch to log in a member of the auto-available split.
25	CS0/16	The options have normal clearing.
26	CS0/42	Switch equipment congestion. The switch is not accepting the request at this time because of processor overload. The adjunct or user may wish to retry the request, but should not do so immediately.
27	CS0/99	An information element is nonexistent.
28	CS3/22	Queues are full.
29	CS0/01	Unassigned number.
30	CS0/21	Call rejected.
31	CS0/22	Number changed/SIT-Vacant.
32	CS0/31	Normal, unspecified/SIT-unknown.

Continued on next page

Table 1-20. Correlation Between Voice System and DEFINITY Generic 3i Coding Standards and Values — *Continued*

VIS Value	DEFINITY Value	Description
33	CS0/34	No circuit or channel available/SIT-not circuit.
35	CS0/58	Bearer capability is not presently available.
36	CS0/88	The destination is incompatible.
37	CS0/95	Invalid message, unspecified.
38	CS0/97	The message is nonexistent/not implemented.
39	CS3/19	There is no answer.
40	CS3/20	Trunks are not available.
41	—	The ASAI link is down.
42	CS3/30	Redirected.
43	CS3/38	The network is out of order.
44	CS3/42	Reorder/denial.
45	CS3/46	Administration is in progress.
46	CS3/53	The feature request was rejected.

Repairing Administrative Troubles

Administrative troubles are experienced while performing a task you have initiated (for example, a trouble arises while performing a *mkimage* of the system software). Table 1-21 contains troubles related to administrative tasks.

Table 1-21. Repairing Administrative Troubles

Trouble Indication	Corrective Action
UNIX commands are failing or the disk reported failures.	1. Scan the Message Log Report in Chapter 2, "Message Log Entries," in *INTUITY™ CONVERSANT® System Version 6.0 System Alarms and Log Messages*, 585-310-182.
ccasum never finishes its cron job.	1. Determine if you are transferring to more than 100 numbers. If you are, kill the cron job by completing the following Steps a through c: a. Enter **ps -ef | grep ccasum** b. Search for the PID for ccasum (is it located in the second column from the left). c. Enter **kill -9 *pid#*** where *pid#* is the parent process id (PID) number. 2. Create an index for ccasum by completing the following Steps a through c: a. Log in to SQL*Plus as **sti/sti** b. Enter **create index cca_idx on cca(phone_num);** c. Enter **:quit** to exit the SQL*Plus Utility. 3. When the call traffic is light, enter **/vs/bin/util/ccasum** 4. Enter **/vs/bin/util/ccadel** when ccasum is finished.
Using the vi editor causes a core dump.	1. To split the file into multiple segments, enter **split *-n filename name*** where: ***-n*** is the number of lines in each piece (1000 is the default, *filename* is the name of the files you want to split**,** and *name* is the new segment you are creating.

Repairing Operational Troubles

Operational troubles are experienced with the physical components of the voice system, such as a blank monitor or an inoperable modem. These troubles can occur at any time. Table 1-22 contains troubles related to operational tasks.

Table 1-22. Repairing Operational Troubles

Trouble Indication	Corrective Action
The monitor screen is blank, but the voice system is still taking calls.	1. Check the power on the voice system. If on, place a test call to the system. 2. Check the LED on the monitor. If on, check the contrast and brightness controls on the monitor. 3. Check the monitor connection to the voice system. 4. Unplug/plug in the monitor cable to the voice system. 5. Check the on/off switch on the monitor. 6. Log in remotely to check out the system and see if the voice system is taking calls. 7. If the problem persists, replace the monitor and or the video controller circuit card.
The **shutdown** and **init** commands will not bring the system down.	1. Perform a hard reboot of the system.

Repairing Feature Licensing Troubles

Operational troubles are experienced with the physical components of the voice system, such as a blank monitor or an inoperable modem. These troubles can occur at any time. Table 1-23 contains troubles related to operational tasks.

Table 1-23. Repairing Feature Licensing Troubles

Trouble Indication	Corrective Action
Feature licensing is no longer active.	1. If the name of your system has been changed, the TSC must be notified.

Repairing Other Voice System Troubles

Other voice system troubles include those general trouble areas that do not fall into the other classes listed above The following tables contain some general trouble areas that do not fall into the other classes listed above. Specifically, the troubles include:

- Switching Control Center System (SCCS) and Alarm Relay Unit (ARU) troubles
- Call transferring troubles
- Performance-related troubles
- Speech-related troubles
- Diagnostic troubles
- Touch-tone input troubles
- Report troubles
- Channel state troubles

Repairing Switching Control Center System (SCCS) and Alarm Relay Unit (ARU) Troubles

Table 1-24 lists the repair procedures for repairing Switching Control Center System (SCCS) and Alarm Relay Unit (ARU) troubles.

Table 1-24. Repairing SCCS/ARU Troubles

Indication	Corrective Action
ARU/SCCS hardware is not responding to alarms from the voice system.	1. Check the hardware/cabling connections. See Chapter 3, “Making Cable Connections,” in you platform system installation. 2. Verify that the serial port on the eight-port asynchronous unit is properly configured on the voice system. 3. Verify that the CPU (tty00) is properly configured on the voice system. 4. Verify that the software is communicating with the ARU by completing the following Steps a and b: a. Enter **load_aru_b** if the ARU is a J1P158B-1 without scan points. Enter **load_aru_c** if the ARU is a J1P158C-1 with scan points. As you enter this command, you should see one of the two LEDs on the front of the ARU flicker, and the word “DOWNLOAD” should flash on the display panel. These LEDs correspond to serial ports A and B on the ARU. b. If you did not see the LED flicker or DOWNLOAD displayed, try swapping the connection to the other serial port on the ARU and repeat the procedure. If you still fail to see the other LED flicker, this indicates a cabling/port configuration problem. If the second port works and it has the same switch settings as the 1st, this may indicate a bad serial port on the ARU. 5. Verify that there are no other processes communicating with the TTY port assigned to the ARU. The getty for the TTY port used by the ARU should be initialized at the baud rate configured for the ARU. Once the getty has been initialized for that port, it should be turned off. It will be turned off when the CompuLert/SCCS/ARU package is loaded. If not, complete the following Steps a and b: a. Manually turn off the getty process. b. Check all other processes, dips, etc. and ensure they are not attempting to send/retrieve data from that port.

Continued on next page

Table 1-24. Repairing SCCS/ARU Troubles — *Continued*

Indication	Corrective Action
Error message ERROR 03, ERROR 04, or ERROR 10 shows up on the ARU when the unit is powered-on or reset, or when receiving a message from the voice system.	1. Hold the Lk-Out and Reset keys in at the same time for approximately two seconds to verify that the BAUD rate of the ARU (according to switch settings on the back of the unit) for **Port A** match the BAUD rate of the TTY port used for communication. 2. Press Reset again to get back to the NORMAL mode. 3. Check the ARU Users Manual if changes to the DIP switch settings are necessary. If changes are made, the ARU must be reset or powered off/on for the new settings to take effect on the unit.
Error message ERROR 06, ERROR 07, or ERROR 11 shows up on the ARU when the unit is powered-on or reset, or when receiving a message from the voice system.	1. Hold the Lk-Out and Reset keys in at the same time for approximately two seconds to verify that the BAUD rate of the ARU (according to switch settings on the back of the unit) for **Port B** match the BAUD rate of the TTY port used for communication. 2. Press Reset again to get back to the NORMAL mode. 3. Check the ARU Users Manual if changes to the DIP switch settings are necessary. If changes are made, the ARU must be reset or powered off/on for the new settings to take effect on the unit.
The red LED for port A/B of the ARU stays on when it is connected to the voice system.	1. Perform the procedure from “ARU/SCCS hardware not responding to alarms from the voice system” above. 2. Check the behavior of the serial port with another device, like an asynchronous modem. If the port works fine with the modem then the port is probably fine, it just needs to be cabled and configured properly for the ARU.
The wrong priority (critical, major, informational) level is assigned for a particular message.	Enter **chg_alarm** to change the priority level for a particular message sent to the ARU.

Repairing Call Transfer Troubles

Table 1-25 lists the repair procedures for repairing call transfer troubles.

Table 1-25. Repairing Call Transfer Troubles

Indication	Corrective Action
voice system not transferring calls properly.	1. Scan the Message Log Report in Chapter 2, "Message Log Entries," in *INTUITY™ CONVERSANT® System Version 6.0 System Alarms and Log Messages*, 585-310-182. 2. Verify the values on the Switch Administration screen as described in Chapter 6, "Switch Interfaces," of *INTUITY™ CONVERSANT® System Version 6.0 Administration*, 585-310-591. If this screen has changed, complete the following Steps a through d: a. Save the values. b. Stop the voice system. See "Stopping the Voice System" in Chapter 3, "Common System Procedures". c. Start the voice system. See "Starting the Voice System" in Chapter 3, "Common System Procedures". d. Reinstall the application. See "Installing the Script Builder Package" in Chapter 10, "Installing the Optional Feature Software". 3. Try to transfer a call manually, by completing the following Steps a through d: **NOTE:** An analog phone is needed for this text. a. Plug the line going into the voice system into the phone. b. Place the call to this phone. c. Answer the call. d. Try to transfer to another extension. 4. Assign the feature test script to the channel and place test calls. 5. Enter **trace tsm chan all trip | tee /tmp/trace.out** 6. Check the logic of the application that is doing the transfer.

Continued on next page

Table 1-25. Repairing Call Transfer Troubles

Indication	Corrective Action
Direct agent calls do not work properly.	Make sure all fields within the ASAI external actions are defined as the feature documentation states. If Script Builder must convert fields from one type to another (that is, char to num) sometimes fields do not contain the values expected. For a direct agent call to be successful, the `Split Extension` field must contain the number identifying a valid ACD split. If the field is corrupted the direct agent call will not work.

Repairing Performance Troubles

Table 1-26 lists the repair procedures for repairing performance troubles.

Table 1-26. Repairing Performance Troubles

Indication	Corrective Action
The system is slow or delayed in speaking.	1. Make sure the value for the Cache Controller is set to "Enable" in the CPU CMOS SETUP screen. It is highly unlikely that this is the root cause of degraded system performance and the system must be powered down and rebooted to check this screen. See "Accessing the Setup Screen" in Chapter 4, "Connecting Peripherals and Powering Up," of the new system installation book for your platform. 2. Reduce the load. See "Reducing Load" below.
The system performance is degraded. For example: ■ Speech breaks are occurring ■ There is bad response time to commands	

Repairing Diagnostics Troubles

Table 1-27 lists the repair procedures for repairing diagnostics troubles.

Table 1-27. Repairing Diagnostics Troubles

Indication	Corrective Action
Card diagnostics failed.	Check the circuit cards. See "Circuit Card Diagnostics" in Chapter 2, "Diagnostics".

Repairing Touch-Tone Input Troubles

Table 1-28 lists the repair procedures for repairing touch-tone input troubles.

Table 1-28. Repairing Touch-Tone Input Troubles

Indication	Corrective Action
User touch-tone input is not being correctly interpreted by the system.	1. Verify the Prompt and Collect action matches the intended use in the script. 2. If this is channel related (that is, the trouble only appears on a particular channel) and you have another card, see if the trouble occurs on the other card. If not, replace the original card. See Chapter 5, "Replacing, Installing, or Upgrading Circuit Cards".

Repairing Report Troubles

Table 1-29 lists the repair procedures for repairing report troubles.

Table 1-29. Repairing Report Troubles

Indication	Corrective Action
Call data reports are not accurate or they are not complete.	1. Determine if there is any additional free space in the database by entering **dbfrag** 2. Scan the Message Log Report in Chapter 2, "Message Log Entries," in *INTUITY™ CONVERSANT® System Version 6.0 System Alarms and Log Messages*, 585-310-182.

Repairing Channel/Card State Troubles

Table 1-30 lists the repair procedures for repairing channel/card state troubles.

Table 1-30. Repairing Channel/Card State Troubles

Indication	Corrective Action
The channel/card is in the state Hwoos or Netoos.	Determine the type of channel by entering **display channel *<channel number>*** 1. If the outcome shows PRIB or PRID, see Table 1-12. 2. If the maintenance state is displayed by looking at the Channel Administration screen under the ASAI Feature Packages, see the ASAI troubleshooting section in this book.
Channel/card is in state Manoos.	Restore the channel or card by entering **restore [channel/card] *[channel/card #]*** See Appendix A, “Summary of Commands,” in *INTUITY™ CONVERSANT® System Version 6.0 Administration*, 585-310-591.
Channel/card is in state Foos.	Enter **display channel *<channel number>*** If T1.5, PRIB, or PRID is displayed, check the error log for a message in the range TWIP013–TWIP018. Follow the recommended repair procedure for that message. If VRS6, IVP4, or IVP6 is displayed: 1. Enter **diagnose card *<card number>***. 2. If the channel remains Foos, check the phone connection to the card.
Channel/card is in state Broken.	Follow the repair procedure for message MTC003 provided in Chapter 3, “System Message Listings.” If the card is an SP card, perform the “Checking the TDM Bus” procedure in Chapter 4, “Common Maintenance Procedures,” as well.

Reducing Load

This repair procedure is provided to enable application developers and system administrators to troubleshoot the root cause of system problems. Problems related to performance depend on a wide range of variables; understanding the nature of the problem requires a good understanding of the attributes of the system which effect performance. Consult the performance information located in the *INTUITY™ CONVERSANT® System Version 6.0 System Description*, 585-310-241, before attempting to troubleshoot complex performance related problems.

NOTE:
Every INTUITY CONVERSANT system must have a minimum of 32 Mbyte of memory.

Indicators of Performance Problems

Most performance-related problems become noticeable through either reports of slow response time from end users or performance- or load-related error messages in the alarm log.

Reports of Poor Response Time

If poor response time is reported but no load-related messages are reported to the alarm log, it is likely that the response time delays are a result of:

- Host transactions
- Database transactions
- Delays in custom database interface processes (DIPs)

Rarely will an application see unacceptable delays because of voice processing (playing and coding phrases and recognizing touch tones) with the absence of alarms in the alarm log. Voice processing shows little change in response time as system load increases. Typically, if load increases to a point where the system cannot serve voice processing requests in real time, alarms are logged.

Load-Related Messages in the Alarm Log

Load-related messages in the alarm log indicate that voice processing cannot be carried out in real time because of excessive system load. Components of the system which affect voice processing include:

- Central processing unit (CPU)
- Memory
- Hard disk drives
- Signal processor (SP) cards

Identifying Load Culprits

Before attempting to analyze the application for load liabilities, it is important to remember that processing external to the application may be the cause of load related problems. Check that none of the following occur at times when load-related alarms are reported:

- Use of the INTUITY CONVERSANT Script Builder application generator on a production machine during peak load hours
- Excessive use of call data event tracking
- Reading of large (more than 300 records) database tables that are not indexed
- Reading of and writing to database tables exclusively
- Use of the system monitor program with a fast refresh rate

  A fast refresh rate is anything less than the default rate of 5 seconds.
- Requests of call data reports during peak load periods
- Performance of other operation, administration, and maintenance (OA&M) functions (includes backups, speech administration, etc)
- System cron jobs

NOTE:
Every day at 12:15 a.m. all call data is summarized. If this coincides with even low voice processing activity, alarms may be reported. A possible solution is to modify the crontab entry for a time with less load.

If sources of external load have been ruled out, continue with the following sections.

Checking CPU Resources

To check the CPU resources do the following:

1. Enter **sar**

NOTE:
The **sar** command reports system activity reports for a wide variety of system resources. (See **sar(1m)** in the *UNIX SVR3 System Administrators Reference Manual* for a complete description.)

The system displays the CPU Resources screen (Figure 1-2).

```
00:00:00  %usr      %sys      %wio      %idle
01:00:00    0         0         0         100
02:00:00    0         0         0         100
03:00:00    0         0         0         100
04:00:00    0         0         0         100
05:00:00    0         0         0         100
06:00:00    0         0         0         100
07:00:00    0         0         0         100
08:00:00    0         0         0         100
08:20:00    0         0         0         100
08:40:00    0         0         0         100
09:00:00    0         0         0          99
09:20:00    0         0         0          99
09:40:00    0         4         1          95
10:00:00    9        43         3          45
10:20:00   10        36         2          52
10:40:00   10        23         2          65
11:00:00    9        23         2          65
11:20:00    2         4         1          93
11:40:00    0         0         0          99
```

Figure 1-2. CPU Resources Screen

NOTE:
To display current CPU usage every 5 seconds for 50 seconds, enter **sar 5 50**

If the CPU Resources screen shows CPU usage (the sum of columns 2 and 3, usr + sys) over 50 percent during the busy hour or when alarms are logged, it is likely that alarms are a result of over utilization of CPU resources.

The output of the second command should only be considered during the busy hour and CPU usage should again be below 50 percent. If either of these test show CPU utilization consistently over 50 percent it is likely that the CPU is the problem.

See "Reducing CPU Usage" below.

Checking Disk Resources

To check the CPU resources do the following:

1. Enter **sar -c** or **sar -c 5 50**

The system displays the Disk Resources screen (Figure 1-3).

```
00:00:00  scall/s   sread/s   swrit/s   fork/s    exec/s    rchar/s   wchar/s
01:00:00     58        4         0      0.14      0.15      5219        42
02:00:00     37        2         0      0.04      0.04       202         3
03:00:00     35        2         0      0.02      0.02       180         2
04:00:00     38        3         0      0.03      0.04       522         6
05:00:00     48        3         0      0.06      0.06       634         6
06:00:00    108       16        15      0.05      0.07      2021       794
07:00:00   2246       48      1256      0.02      0.03     12984     46369
08:00:00   1841       47       804      0.11      0.13      9475     36937
08:20:00   1036       34        25      0.02      0.02      2649     17658
08:40:00   1067       39        38      0.03      0.04      3985     26619
09:00:00    246       19         5      0.10      0.10       873      3999
09:20:00     76       19         3      0.09      0.10      1956      1347
09:40:00     65       16         0      0.08      0.08       424         6
10:00:00     74       20         1      0.12      0.12       567        38
10:20:00     72       20         1      0.08      0.08       423        15
10:40:00     73       20         1      0.08      0.08       464        17
11:00:00     87       24         5      0.11      0.11      2005       857
11:20:00     78       22         2      0.10      0.10      1001        82
11:40:00    103       27         2      0.27      0.30      3206       195
```

Figure 1-3. Disk Resources Screen

NOTE:
If the sum of the **rchar/s** and **wchar/s** columns is consistently greater than 320000 during the busy hour, then it is likely that the disk is the problem. See "Reducing CPU Usage" for repair procedures.

Checking Memory Resources

To check the CPU resources do the following:

1. Enter **sar -p** or **sar -p 5 50**

The system displays the Memory Resources screen (Figure 1-4).

```
00:00:00   atch/s   pgin/s    ppgin/s   pflt/s    vflt/s    slock/s
01:00:00    2.62     0.06       0.10     0.55      0.36       0.07
02:00:00    0.02     0.07       0.10     1.06      0.63       0.12
03:00:00    0.29     0.29       0.49     0.98      1.74       0.10
04:00:00    3.74     0.84       0.86     0.35      4.31       0.04
05:00:00    4.38     0.40       0.43     2.02      4.32       0.21
06:00:00    4.43     0.20       0.21     0.32      3.42       0.04
07:00:00    9.55     0.16       0.19     0.43      3.66       0.05
08:00:00    1.00     0.03       0.03     1.62      1.50       0.18
08:20:00    0.49     0.00       0.01     1.36      0.85       0.15
08:40:00    0.02     0.00       0.00     1.10      0.56       0.12
09:00:00    0.23     0.01       0.01     1.84      1.06       0.20
09:20:00    0.03     0.00       0.00     1.19      0.57       0.13
09:40:00    0.03     0.00       0.00     1.18      0.60       0.13
10:00:00    0.16     0.00       0.00     1.72      0.96       0.19
10:20:00    0.06     0.00       0.00     1.52      0.71       0.17
10:40:00    2.12     0.33       0.48     3.79      2.07       0.38
11:00:00    2.82     4.64       7.98    21.17     16.96       2.00
11:20:00    2.57     0.35       0.63     1.44      1.86       0.15
11:40:00    0.25     0.12       0.20     2.35      1.33       0.22
```

Figure 1-4. Memory Resources Screen

Check the column labeled `vflt/s`. If this value is consistently greater than 2.00, then memory may be the problem.

NOTE:
Processes being created and terminated regularly will also cause vflt/s to increase. If this is the case, memory may be sufficient, but the creation of processes is forcing the operating system to *page* processes to disk and back into memory. When processes are paged, they respond more slowly and speech processing may be interrupted.

See "Reducing Memory Usage" below for more information.

Checking SP Card Resources

There is no way to examine the activity on an SP card, however, the SP cards have well defined limits for how much voice processing they support. See *INTUITY™ CONVERSANT® System Version 6.0 System Description*, 585-310-241. Be sure that your application does not go beyond these limits for the various coding types and voice activities.

Also, make sure that the appropriate number of SP cards in your system are assigned the VOICE function. See "Assigning Functions to SP Cards" in Chapter 3, "Configuration Management," of *INTUITY™ CONVERSANT® System Version 6.0 Administration*, 585-310-591.

Reducing Load for Host

Tune the 3270 host interaction.

The following procedures should be considered for reducing the load for the host:

- Limit the number of screens that must be sent to or retrieved from the host, making the voice system less dependent on host performance.
- The parameters associated with the host can impact system performance. Make sure that time-out periods are long enough for the host to respond but not too long so that the caller must wait unnecessarily. Be aware of how the parameters are used and what is typical for the host system. Keep track of how many LUs the system has and how many channels are to be used. For example, if a system with one host communication board (32 LUs available) has 48 calls active each of which needs to access the host, 16 callers are locked out of the host if LUs are not shared (that is, if the LUs are reserved).
- For host systems that are known to be slow at times, one way of hiding the pause from the host is to use an announce statement between the send host screen and the get host screen statements. For example:

  1. Prompt and Collect (get card number)
  2. Get Host Screen A
  3. Send Host Screen A (send the card number to the host application)
  4. Announce (repeat the card number to the caller)
  5. Get Host Screen (retrieve caller data)

  This would cover part of the time that the host is slow in processing the user-input card number with an announce statement that repeats the number back to the user. By the time the announce is completed, the host may have responded. Thus the user does not realize the gap caused by the slow host response.

Reducing Load for Database

The following should be considered to reduce load because of use of the local database.

- For large tables (over 300 records) that are being read by the application, indexing the tables reduces the access time and impact on system performance.
- The insert (add) record operation is a much faster operation than the update (change) operation. One way to replace a change record with an add record is to add records to a table during the normal call hours and write a shell routine using SQL*PLUS to summarize and delete records during nonpeak hours.
- Attempt using SQL*Views to encapsulate common database queries which require multiple accesses on a single table or accesses from multiple tables.

Reducing Load for DIPs

Since DIPs can be vary widely in size and complexity there is little specific information that can be given about dip performance. In general, DIPs should:

- Avoid using excessive memory (more than 200 pages)
- Avoid creating new processes (by using fork(2) and exec(2) or system(3))
- Rely on minimal communication with the script to reduce message sending

Reducing Load for Voice Processing

See performance information in *INTUITY™ CONVERSANT® System Version 6.0 System Description*, 585-310-241, for a more detailed explanation the performance of voice processing. The information below simply attempts to give a step-by-step approach to reducing speech-processing load.

Voice Play

Voice play performance is affected by the:

- Coding algorithm
- Phrase length
- Speech pool

Coding Algorithm

Coding algorithm primarily determines how much data must be transferred to do voice processing. Coding algorithms such as SBC16 and ADPCM16 pack 8 seconds of speech in a single block and show the best performance. PCM64 is

at the other extreme of the spectrum; it packs 2 seconds of speech in a single block, and therefore requires the system to do four times the work in the same time. ADPCM32 is the standard coding rate. ADPCM32 is a middle ground between performance and sound quality. It packs 4 seconds per block. SBC 24 packs 6 seconds per block. Sound quality must be considered before moving to the SBC16 or ADPCM16 coding algorithms.

Phrase Length

Short phrases (less than 2 seconds for ADPCM32), particularly when played back-to-back (such as through a single Script Builder Announce action), place more load on the system then a single longer phrase. The load manifests itself as increased CPU usage, memory occupancy and, if the speech pool size (see the following paragraph) is larger than the speech buffer cache, disk accesses.

For optimal performance, phrase length should be as close to the total capacity of its block count as possible. Block count is the number of speech blocks required to contain the phrase. If speech does not use blocks efficiently, space is wasted in memory and since data is copied over from disk in block sized chunks, disk accesses and CPU usage increase. For example, a 1-second ADPCM32 phrase uses only 25 percent of a block, whereas a 3-second phrase uses 75 percent. A 5-second phrase uses 25 percent of its 2 blocks, whereas a 7-second phrase uses 75 percent of its 2 blocks. As phrases get longer this becomes less an issue since all but the last block will be used to capacity. This inefficiency translates into increased memory usage, CPU usage, and disk accesses. Three, 1-second phrases occupy 3 blocks in the Speech Buffer Cache and require 3 blocks to be transferred from disk. One 3-second phrase requires 1 block in the buffer cache and a 1-block transfer from disk.

Speech Pool

The speech pool is the quantity of speech data required by an application. It can be thought of as the *working set* for those familiar with virtual memory operating system terminology. The voice system caches speech in main memory. This is called the speech buffer cache, and it allows speech data to be reused without having to constantly retrieve it from disk. If all the active speech data can fit into memory simultaneously, the voice system will not have to continually access the disk for speech data. This results in a substantial savings in both CPU usage and disk accesses. If, however, the speech pool size is larger than the speech buffer cache, then the voice system will have to access the disk more frequently for speech. The larger the speech pool, the more likely speech will have to read from disk.

Calculating speech pool size requires knowing which phrases are usually played during normal script processing and how many blocks of speech these phrases require. See the paragraph above regarding block capacity for various coding algorithms. Calculating the size of the buffer cache requires a meticulous analysis of the application and an understanding on how users progress through a typical call scenario.

The number of blocks available in the speech buffer cache is a tunable parameter called *nbufs* which is found in **/vs/data/spchconfig.** This value may be tuned as needed, but this should be done with extreme caution. Making this number too large may result in system paging, which is the worst condition the voice system can get into with respect to performance. A system showing signs of heavy disk activity, a large speech pool, and no appreciable paging activity may be a candidate for increasing the *nbufs* parameter. The default is 240, which is big enough for most cases. To increase the value, SHMMAX needs to be tuned.

Reducing Voice Play Load

Reducing load because of voice play requires maximizing speech buffer efficiency, matching the speech pool size to the speech buffer cache, or considering the use of different coding rates which pack more speech into a single block.

Maximal speech buffer efficiency may be achieved through the concatenation of several small phrases into a single larger phrase. The common practice of trimming silence from the ends of phrases and replacing the silence with short silent phrases is particularly inefficient. Playing silence to introduce delays is also inefficient. Try using the **sleep** instruction as described in Appendix A, "Summary of Script Instructions," of *INTUITY™ CONVERSANT® System Version 6.0 Application Development with Script Builder*, 585-310-760.

Matching the speech pool size with the speech buffer cache may be achieved through increasing speech buffer efficiency as described above, and ensuring that phrases are shared both with and between applications.

Voice Code

Performance because of voice coding is affected as is voice play with respect to phrase length and coding algorithm. Voice coding differs is in speech pool size. All coded phrases are *new*, that is, there is no benefit from the speech buffer cache. Indeed, it is likely that coding phrases will force other phrases, which may be likely to be played soon, to be flushed from the cache. Coding will also require a write to disk for each phrase coded. These two factors combine to increase load on the disk. Increased disk load because of coding may be addressed by switching coding algorithms or reducing channel counts or code times. *nbufs* may also be increased (see the speech pool section under Voice Play for more information).

Reducing CPU Usage

Application types making heavy use of CPU resources typically include those with heavy voice processing or local database loads. See "Reducing Load for Voice Processing" and "Reducing Load for Database" above for more information. If these software components do not appear to be responsible, the following sections suggest other possibilities.

Inefficient DIPs

See "Reducing Load for DIPs" above.

Run Away Processes

If the **sar(1m)** command consistently shows 0 percent idle time, it is likely that a process is in an infinite loop. The process can be identified with **ps(1m)** by examining the change in its CPU time and run status. If it is a system process, contact a service representative. If it is a user process, repair as required.

Inefficient Scripts

There is nothing about script development that precludes users from writing perfectly insane applications. Since scripts are interpreted, attempting to use the script language or Script Builder for anything but basic call flow control may result in unacceptable inefficiencies. Code segments performing complex lexical or arithmetic calculations should be considered as candidates for DIPs.

Reducing Disk Usage

Applications making heavy use of voice processing or a local database typically place heavy loads on the disk. See the "Reducing Load for Voice Processing" and "Reducing Load for Database" sections. If problems persist, consider rechecking paging activity and memory usage. See the performance information in *INTUITY™ CONVERSANT® System Version 6.0 System Description*, 585-310-241, for information about the performance penalties for excessive use of call data events. Be sure that you application falls within the guidelines specified.

Reducing Memory Usage

If you have concluded that your system does not have sufficient memory, the first thing to consider is the processes you have running. Be sure to check "Identifying Load Culprits" above to rule out the effects of external processing. Table 1-31 lists the processes that can be terminated if they are not providing a service to the application.

Table 1-31. Processes which may be Terminated

xferdip	This process is used only in bridging applications. Enter **xferdip_off** to terminate the process.
lpsched	This process is only required if a line printer is being used with the system. The command **/usr/lib/lpshut** can be used to turn off the lp scheduler. A more permanent solution involves removal of the **S80lp** file from the **/etc/rc2.d** directory.
Network	Some networking processes such as **rwhod** may be unnecessary.
sysmon	Do not run **sysmon** in systems with insufficient memory.

If no processes can be eliminated, be sure that all the packages on your system are being used and are not occupying memory unnecessarily.

Also be aware that script size, both code and data, affects memory usage. Application scripts should be shared across channels whenever possible, and redundant code and data should be eliminated.

Finally, if the speech pool size is not significantly larger than the *nbufs* parameter (see "Speech Pool" above), consider reducing *nbufs*. The effect of reducing *nbufs* may be an increase in disk accesses for speech, however, the voice system is more tolerable to disk accesses for speech than for paging.

Diagnostics

2

Overview

This chapter describes diagnostic procedures for the INTUITY™ CONVERSANT® system.

Purpose

The purpose of this chapter is to provide the on-site technician or system administrator with the correct procedures to diagnose trouble with the INTUITY CONVERSANT system.

Circuit Card Diagnostics

The following diagnostics can be performed on:

- Tip/Ring circuit cards
- SP circuit cards
- SSP circuit cards
- Token Ring circuit cards

Checking Cable Connections for Cables other than the TDM Bus Cable

To check cable connections, do the following:

1. Route calls away from the system during this procedure.
2. Make sure that you know the type of card to be checked.
3. Write down the message text so that when the system is shutdown, you know for which card you are performing this procedure.
4. Shutdown the operating system. See "Shutting Down the Operating System" in Chapter 3, "Common System Procedures".
5. Access the circuit card cage. See "Accessing the Circuit Card Cage" in Chapter 4, "Getting Inside the Computer".
6. Check the cable connections to be sure they are properly connected to the appropriate cards. See Chapter 5, "Replacing, Installing, or Upgrading Circuit Cards".

   If a cable is not seated properly, reseat the cable and continue with Step 7.

   If the cables appear to be inserted properly, complete the following Steps a through c before continuing with Step 7.

   a. Remove the cables other than the TDM Bus cable.

      NOTE:
      Do not remove the TDM Bus cable at this time.

   b. Remove the circuit card from the system. See "Removing a Circuit Card" procedure in Chapter 5, "Replacing, Installing, or Upgrading Circuit Cards".

   c. Replace the circuit card. See "Installing a Circuit Card" procedure in Chapter 5, "Replacing, Installing, or Upgrading Circuit Cards".

      NOTE:
      Do not reseat the cables on the circuit card.

7. Reboot the operating system. See "Rebooting the UNIX System" in Chapter 3, "Common System Procedures".
8. Enter **diagnose card *<card number>***

   where *<card number>* is the number of the identified circuit card.

   If the circuit card passes diagnostics, and is on the TDM bus, continue with Step 9.

   If the circuit card passes diagnostics and is not on the TDM bus, replace the cables you removed earlier and restore the system to service.

   If the circuit card fails diagnostics, replace the circuit card and restore the system to service. See Chapter 5, "Replacing, Installing, or Upgrading Circuit Cards".
9. Enter **diagnose bus *x***

   where *x* is the number of bus.

   NOTE:
   X must be either 1 or all.

   If the circuit card passes this diagnostic, replace the cables removed in "Checking Cable Connections for Cables other than the TDM Bus Cable."

   If the circuit card fails this diagnostics, continue with the next procedure, "Checking the Terminating Resistors."

Checking the Terminating Resistors

To check the terminating resistors, do the following:

1. Shutdown the operating system. See "Shutting Down the Operating System" in Chapter 3, "Common System Procedures".
2. Verify that the terminating resistors are inserted correctly. See "Replacing a Terminator SIP" in Chapter 7, "Replacing Other Components".

   NOTE:
   The AYC5B and AYC11 do not require orientation of the terminating resistors.

   If the terminating resistors are inserted correctly, continue with Step 3.

If the terminating resistors have not been inserted correctly, complete Steps a through c:

a. Insert the terminating resistors correctly.

b. Reboot the system. See "Rebooting the UNIX System" in Chapter 3, "Common System Procedures".

c. Enter **diagnose card *<card number>***

where *<card number>* is the number of the identified circuit card.

If the circuit card passes diagnostics, restore the system to service.

If the circuit card does not pass the diagnostic, continue with Step 3.

3. Verify that terminating resistors for the TDM bus exist only on the circuit cards connected at either end of the TDM bus.

If the other circuit cards do not have terminating resistors, continue with the next procedure "Checking the Switch Settings."

If the other circuit cards have terminating resistors, complete Steps a through c:

a. Remove the terminating resistors.

b. Reboot the system. See "Rebooting the UNIX System" in Chapter 3, "Common System Procedures".

c. Enter **diagnose card *<card number>***

where *<card number>* is the number of the identified circuit card.

If the circuit card passes diagnostics, restore the system to service.

If the circuit card does not pass the diagnostic, continue with the next procedure, "Checking the Backplane Slot."

Checking the Backplane Slot

To check the backplane slot, do the following:

1. Shut down the system. See "Shutting Down the Operating System" in Chapter 3, "Common System Procedures".
2. Change the slot in which the circuit card resides.
3. Login as root.

4. Start the voice system. See "Starting the Voice System" in Chapter 3, "Common System Procedures".
5. Enter **display card *<card number>***

   where *<card number>* is number of the affected circuit card.

   If the circuit card state has changed to MANOOS, enter **restore card *<card number>***

   where *<card number>* is the number of the affected circuit card.

   You have repaired the circuit card problem.

   If the circuit card state has not changed to MANOOS, continue with the next procedure "Checking the Switch Settings."

Checking the Switch Settings

To check the switch settings, do the following:

1. Check the circuit card for proper switch settings. See Chapter 5, "Replacing, Installing, or Upgrading Circuit Cards".
2. Toggle the switches to ensure a clean closure.
3. Check the chips on the card.

   If any are not properly seated, reseat them.
4. Check the switches on all other similar circuit cards in the system.

   For example, if the circuit card is a Tip/Ring circuit card, check the switch settings on all of the Tip/Ring circuit cards. See "Tip/Ring Circuit Cards" procedure in Chapter 5, "Replacing, Installing, or Upgrading Circuit Cards".
5. Toggle the dip switches to ensure a clean closure.
6. Reboot the system. See "Rebooting the UNIX System" in Chapter 3, "Common System Procedures".
7. Login as root.
8. Start the voice system. See "Starting the Voice System" in Chapter 3, "Common System Procedures".
9. Enter **displaycard *<card number>***
   where *<card number>* is number of the affected circuit card.

   If the circuit card state has changed to MANOOS, enter **restorecard *<card number>***
   where *<card number>* is the number of the affected circuit card.

   You have repaired the circuit card.

   If the circuit card state has not changed to MANOOS, continue with Step 10.

10. Shut down the system. See "Shutting Down the Operating System" in Chapter 3, "Common System Procedures".
11. Reverse the switch settings of the suspect circuit card with a similar circuit card in the system.
12. Reboot the system. See "Rebooting the UNIX System" in Chapter 3, "Common System Procedures".
13. Login as root.
14. Start the voice system. See "Starting the Voice System" in Chapter 3, "Common System Procedures".
15. Enter **display card *<card number>***

    where *<card number>* is number of the affected circuit card.

    If the circuit card state has changed to MANOOS, enter **restore card *<card number>***

    where *<card number>* is the number of the affected circuit card.

    If the problem migrates with the switch setting, it is attributable to a software problem and not a hardware problem.

    If the problem remains with the suspect circuit card, replace the suspect circuit card. See Chapter 5, "Replacing, Installing, or Upgrading Circuit Cards".

Checking the Other Circuit Cards

If the above procedures have been attempted and the problem still exists, the problem may be attributed to another circuit card in the system. To determine which card, do the following:

1. Run diagnostics on all remaining cards in the system by entering **diagnose card all**
2. Observe the diagnostics for any failures.

   If any circuit card fails diagnostics, perform the above procedures on that circuit card to determine if it is the source of the problem.

   If all cards pass diagnostics, contact your service representative.

Checking a Circuit Card Using the INTUITY CONVERSANT Windows

The INTUITY CONVERSANT windows can be used to check the status of

- Tip/Ring circuit cards
- IPCI circuit cards
- Fax circuit cards

Checking a Tip/Ring Circuit Card

It is possible to check the entire Tip/Ring circuit card or to check a single channel on the Tip/Ring circuit card.

Checking the Tip/Ring Circuit Card

To check a circuit card using the INTUITY CONVERSANT windows, do the following:

1. Start at the Voice System Administration menu (Figure 2-1).

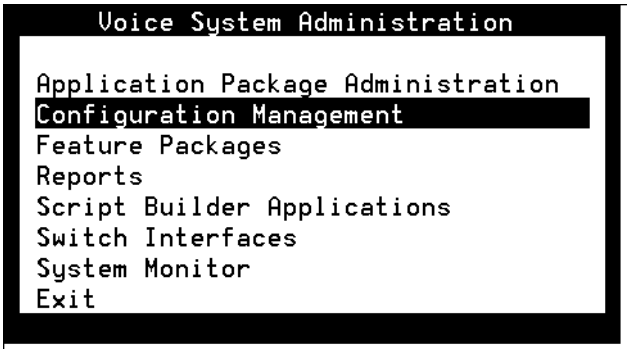

Figure 2-1. Voice System Administration Menu

2. Select

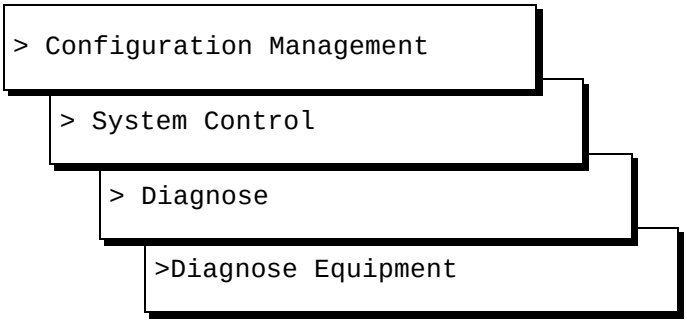

The system displays the Diagnose Equipment Window (Figure 2-2).

```
Diagnose Equipment

Equipment to diagnose:
     Equipment Number:
  Immediate diagnosis?
```

Figure 2-2. Diagnose Equipment Window

3. Enter **card** in the `Equipment to diagnose` field.
4. Enter a card number, valid range, or all in the `Equipment Number` field.

   NOTE:
   Enter circuit card ranges using one of the following formats:

   0,1,2
   0 1 2
   0-2

5. If you want to conduct an immediate diagnosis, enter **y** in the `Immediate diagnosis` field.

   NOTE:
   Immediate diagnosis takes the specified channels out of service immediately even if a call is in progress.

   If you do not want to conduct an immediate diagnosis, enter **n** in the `Immediate diagnosis` field.

   NOTE:
   The system waits until all specified channels are idle before beginning the diagnosis.

6. Press F3 (Save).

   The system removes the circuit card from service and runs the diagnostics.

   If the circuit card passes the diagnostics, the system displays the following message before placing the circuit card back in service:

   `Diag <card>, Passed`

   If the circuit card did not pass the diagnostics, the system displays the following message:

   `Diag <card>, Failed`

   Replace the circuit card.

Checking a Tip/Ring Circuit Card Channel

To check a Tip/Ring circuit card channel using the INTUITY CONVERSANT windows, do the following:

1. Starting at the Voice System Administration menu (Figure 2-1), select

```
> Configuration Management
    > System Control
        > Diagnose
            >Diagnose Equipment
```

   The system displays the Diagnose Equipment Window (Figure 2-2).

2. Enter **channel** in the `Equipment to diagnose` field.
3. Enter a channel number, valid range, or all in the `Equipment Number` field.

   NOTE:
   Enter circuit card ranges using one of the following formats:

   0,1,2
   0 1 2
   0-2

4. If you want to conduct an immediate diagnosis, enter **y** in the `Immediate diagnosis` field.

   NOTE:
   Immediate diagnosis takes the specified channels out of service immediately even if a call is in progress.

   If you do not want to conduct an immediate diagnosis, enter **n** in the `Immediate diagnosis` field.

   NOTE:
   The system waits until all specified channels are idle before beginning the diagnosis.

5. Press F3 (Save).

   The system removes the channel from service and runs the diagnostics.

   If the channel passes the diagnostics, the system displays the following message:

```
Found loop current on Channel X
Channel X state changed to INSERV.
Request to diagnose Tip/Ring chan X completed
```

   If the circuit card did not pass the diagnostics, replace the circuit card.

Checking an IPCI Circuit Card

To check an IPCI circuit card, do the following:

1. Starting at the Voice System Administration menu (Figure 2-1), select

```
> Feature Packages
    > ASAI Administration
        > Diagnose IPCI Board
```

   The system displays the Diagnose IPCI Board window (Figure 2-3).

```
Diagnose IPCI Board

IPCI Board passed all tests

Press ENTER to continue
```

Figure 2-3. Diagnose IPCI Board Window

2. Press ENTER.

   The system displays the ASAI Administration menu (Figure 2-4).

```
    ASAI Administration
 Channel Administration
>Diagnose IPCI Board
 Domain Administration
 Initialize IPCI Board
 Parameter Administration
 Show ASAI Software Version
 Show Status of ASAI Link
 Take IPCI Board Off-Line
```

Figure 2-4. ASAI Administration Menu

If the IPCI circuit card passes the diagnostics, you have completed the procedure.

If the IPCI circuit card fails the diagnostics, replace the circuit card.

Checking a FAX Circuit Card

It is possible to check the entire FAX circuit card or to check a single channel on the FAX circuit card.

Checking the FAX Circuit Card

To check a FAX circuit card, do the following:

1. Starting at the Voice System Administration menu (Figure 2-1), select

```
> Application Package Administration
    > Script Builder FAX Actions
        > FAX Equipment Operations
            >FAX Equipment Diagnostics
```

The system displays the FAX Equipment Diagnostics window (Figure 2-5).

```
Diagnose FAX Equipment
Equipment to Diagnose: _______
     Equipment Number: ____________________
 Immediate Diagnosis?: ___
```

Figure 2-5. FAX Equipment Diagnostics Window

2. Enter **card** in the `Equipment to diagnose` field.
3. Enter a card number, valid range, or all in the `Equipment Number` field.

   NOTE:
   Enter circuit card ranges using one of the following formats:

   0,1,2
   0 1 2
   0-2

4. If you want to conduct an immediate diagnosis, enter **y** in the `Immediate diagnosis` field.

   NOTE:
   Immediate diagnosis takes the specified channels out of service immediately even if a call is in progress.

   If you do not want to conduct an immediate diagnosis, enter **n** in the `Immediate diagnosis` field.

   NOTE:
   The system waits until all specified channels are idle before beginning the diagnosis.

5. Press F3 (Save).

   The system displays the FAX Equipment Diagnostics Results window (Figure 2-6).

```
FAX Equipment Diagnostic Results

Non-Immediate Diagnosis Requested


Diagnosing FAX Card 1...

FAX Channel 4 (Port 0) Passed Test
FAX Channel 5 (Port 1) Passed Test
FAX Channel 6 (Port 2) Passed Test
FAX Channel 7 (Port 3) Passed Test
```

Figure 2-6. FAX Equipment Diagnostics Results Window

6. If the FAX circuit card passes the diagnostics, you have completed the procedure.

   If the FAX circuit card fails the diagnostics, replace the circuit card.

Checking a FAX Circuit Card Channel

To check a FAX circuit card channel, do the following:

1. Starting at the Voice System Administration menu (Figure 2-1), select

```
> Application Package Administration
    > Script Builder FAX Actions
        > FAX Equipment Operations
            >FAX Equipment Diagnostics
```

   The system displays the FAX Equipment Diagnostics window (Figure 2-5).

2. Enter **channel** in the `Equipment to diagnose` field.
3. Enter a channel number, valid range, or all in the `Equipment Number` field.

   NOTE:
   Enter circuit card ranges using one of the following formats:

   0,1,2
   0 1 2
   0-2

4. If you want to conduct an immediate diagnosis, enter **y** in the `Immediate diagnosis` field.

   NOTE:
   Immediate diagnosis takes the specified channels out of service immediately even if a call is in progress.

   If you do not want to conduct an immediate diagnosis, enter **n** in the `Immediate diagnosis` field.

   NOTE:
   The system waits until all specified channels are idle before beginning the diagnosis.

5. Press F3 (Save).

   The system displays the FAX Equipment Diagnostics Results window (Figure 2-6).

6. If the FAX circuit card channel passes the diagnostics, you have completed the procedure.

   If the FAX circuit card channel fails the diagnostics, replace the circuit card.

Checking an EQUINOX Multi-Port Serial Circuit Card

To check a multi-port serial circuit card, do the following:

1. At the UNIX prompt, enter **/usr/bin/megadiag**

   The system displays the Megaport and Megaplex Configuration and Diagnostics screen (Figure 2-7).

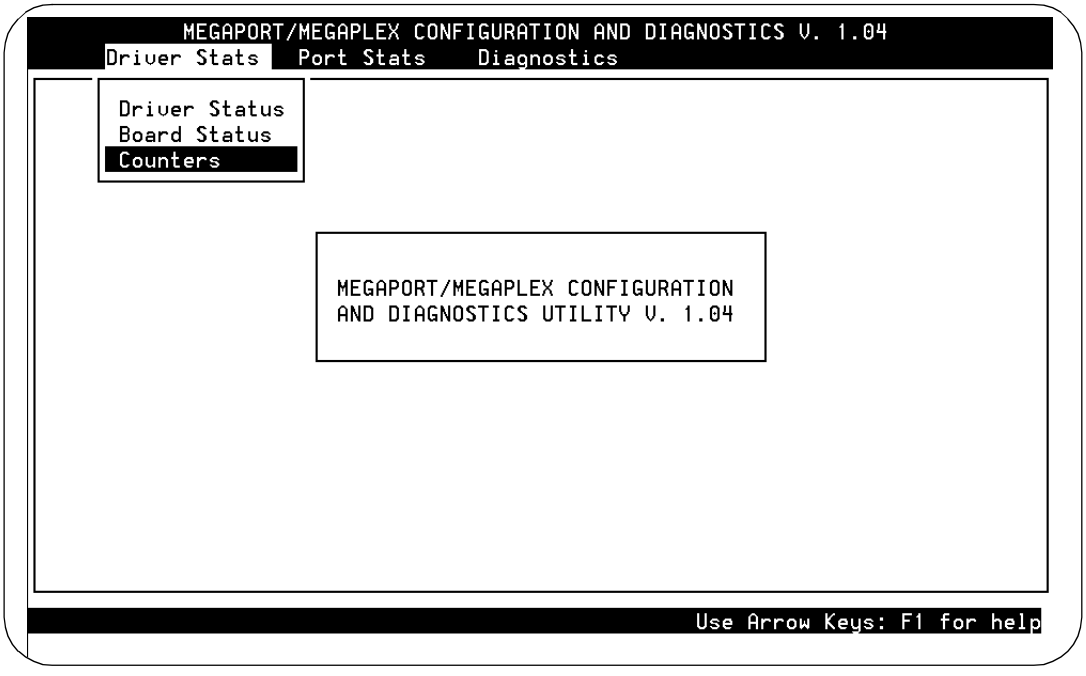

Figure 2-7. Megaport and Megaplex Configuration and Diagnostics Screen

The Megaport and Megaplex Configuration and Diagnostics screen contains a menu bar with the options Driver Stats, Port Stats, and Diagnostics.

Use the right and left arrow keys on the keyboard to move between the menu bar options.

Use the up and down arrow keys to move between menu options.

Press (ENTER) to select a menu option.

Press (F1) for help.

Press (ESC) to exit.

Displaying Serial Port Driver Stats

The serial port driver stats include:

- Drive Status
- Board Status

Driver Status

The Driver Status option displays the device driver's current configuration including the driver version, number of boards configured, number of boards found, and memory mapping.

To display the drive status, do the following.

1. Starting at the Megaport and Megaplex Configuration and Diagnostics screen (Figure 2-7).
2. Place the cursor on `Driver Stats`.
3. Place the cursor on `Driver Status`.
4. Press (ENTER).

   The system displays the Driver Status window (Figure 2-8).

```
                    Driver Status
Equinox Megaport STREAMS Device Driver, Version 2.24a
Currently configured for 1 board(s) (logical).
Number of boards found: 1
Board address          BUFFER              REGISTER
Board # 1           0x000D0000           0x000D2000
```

Figure 2-8. Driver Status Window

Board Status

To display the board status, do the following.

1. Starting at the Megaport and Megaplex Configuration and Diagnostics screen (Figure 2-7).
2. Place the cursor on `Driver Stats`.
3. Place the cursor on `Board Status`.
4. Press (ENTER).

   The system displays the Board Status menu (Figure 2-9).

```
Board
/dev/ttysa[a-x]
/dev/ttysb[a-x]
/dev/ttysc[a-x]
/dev/ttysd[a-x]
/dev/ttyse[a-x]
/dev/ttysf[a-x]
/dev/ttysg[a-x]
/dev/ttysh[a-x]
/dev/ttysi[a-x]
/dev/ttysj[a-x]
```

Figure 2-9. Board Status Menu

Displaying Port Stats

Three options are available on the Port Stats menu:

- Port Status
- Termio
- Register Dump

These options allow the system to show certain port characteristics.

Port Status

The Port Status selection is a real-time representation of the RS-232 leads. It includes:

- Transmit rate
- Receive rate
- Total characters received

- Total characters transmitted
- Buffered data counts

The Port Status display is useful in troubleshooting wiring problems, chattering lines or devices (modems) and in monitoring load activity over a single line. Activity measurements can be taken by noting the Transmitted and Received counts and comparing them with other serial ports.

To display the port status, do the following.

1. Starting at the Megaport and Megaplex Configuration and Diagnostics screen (Figure 2-7).
2. Place the cursor on `Port Stats`.
3. Place the cursor on `Port Status`.
4. Press (ENTER).

   The system displays the Prompt window (Figure 2-10).

```
device: /dev/ttysaa
```

Figure 2-10. Prompt Window

5. Enter the name of the device to be verified.

   The system displays the Port Status window (Figure 2-11).

```
                    /dev/ttysaa
    OUTPUT                          INPUT
TD            OFF            RD          OFF
DTR           OFF            DCD         OFF

XON/XOFF      XON'ed
Status        CLOSED
CPS              0           CPS            0
Transmitted            0     Received             0
Buffered         0           Buffered       0
```

Figure 2-11. Port Status Window

Termio

The Termio option displays the general terminal interface data associated with the serial card. It is similar to the “stty” command in that it prints all enabled termio flags.

To display the termio, do the following.

1. Starting at the Megaport and Megaplex Configuration and Diagnostics screen (Figure 2-7).
2. Place the cursor on `Port Stats`.
3. Place the cursor on `Termio`.
4. Press (ENTER).

   The system displays the Prompt window (Figure 2-10).
5. Enter the name of the device to be verified.

   The system displays the Termio window.

Register Dump

The Register Dump option displays a real-time window of the on-board registers. The data is in raw form and useful to only Equinox technical personnel. It is used to obtain information about the hardware status and various software flags.

To display the Register Dump, do the following.

1. Starting at the Megaport and Megaplex Configuration and Diagnostics screen (Figure 2-7).
2. Place the cursor on `Port Stats`.
3. Place the cursor on `Register Dump`.
4. Press (ENTER).

   The system displays the Prompt window (Figure 2-10).
5. Enter the name of the device to be verified.

   The system displays the Register Dump window (Figure 2-12).

```
Reg. dump for /dev/ttysaa
State:     0  mp_flags:    0
cflag:     0  iflag:     522  oflag:    0 lflag:    0

txbase:    0  txidx:       0  txend:    0
rxbase:    1  rxidx:       0  rxend:    0
txcs:     88  txbaud:     FE  out_ct    3
rxcs:     88  rxbaud:     FE  in_ctl   FF
txcsr:  2081  rxcsr:    2081  sample   21
mie:       0  cie:         0  cis:   C200
rxtdm:    CF  txtdm:      C3
equlz:     0  eqmin:       0  eqmax:    0 linkst:   0
Transmit:          0  Receive:          0
```

Figure 2-12. Register Dump Window

Diagnostics

There are two options on the Diagnostics menu:

- Loopback
- Send

They are intended for the experienced user. The Loopback test is designed to diagnose the board's primary components and their functionalities. There are two types of loopback tests: internal and external. The Send test simply writes a continuous stream of data to the specified port which is helpful in resolving wiring issues.

Serial Port External Loopback Test

Although the option for the serial port external loopback test appears on the screen, this option is not available. You should use the internal loopback test option.

Serial Port Internal Loopback Test

The internal loopback test is the same as the external loopback test except that it does not require that the transmit and receive pins be wired together. Because it does not test the full cabling of the port, the internal loopback test is not as thorough as the external loopback test.

To perform the serial port internal loopback test, do the following:

1. Starting at the Megaport and Megaplex Configuration and Diagnostics screen (Figure 2-7).
2. Place the cursor on `Diagnostics`.
3. Place the cursor on `Loopback`.
4. Press (ENTER).

   The system displays the Loopback menu (Figure 2-13).

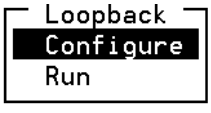

Figure 2-13. Loopback Menu

5. Place the cursor on `Configure`.
6. Press (ENTER).

   The system displays the Configure menu (Figure 2-14).

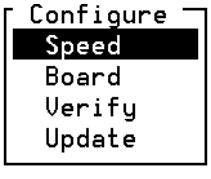

Figure 2-14. Configure Menu

7. Place the cursor on `Board`.
8. Press (ENTER).

   The system displays the Board menu (Figure 2-9).
9. Press (ENTER) to select the first group of ports.
10. Press (ESC).

    The system displays the Loopback menu (Figure 2-13).
11. Place the cursor on `Run`.
12. Press (ENTER).

    The system displays the Run menu (Figure 2-15).

```
Run
 24 Ports
 12 Ports
 8 Ports
 Single
```

Figure 2-15. Run Menu

13. Place the cursor on `8 Ports`.
14. Press (ENTER).

    The system displays the Loop Type menu (Figure 2-16).

```
Loop type
 External Loopback
 Internal Loopback
```

Figure 2-16. Loop Type Menu

15. Place the cursor on `Internal Loopback`.
16. Press (ENTER).

    The system displays the Internal Loopback window (Figure 2-17).

```
Port    Xmit      Rcv       Errors    Rate
saa     156825    151264         0    3874
sab     156825    151237         0    3874
sac     156825    151258         0    3875
sad     156825    151230         0    3876
sae     156825    151219         0    3875
saf     156825    151195         0    3870
sag     156825    151170         0    3861
sah     156825    151160         0    3857

Note

ESC to exit

F2  Reset Errors

F3  Reset Test

F4  Refresh Screen
```

Figure 2-17. Internal Loopback Window

Database Diagnostics

To check the database free space, do the following:

1. Execute the **dbfrag** command.

   The system displays the System Tablespace screen (Figure 2-18).

   NOTE:
   The data in your System Tablespace screen may be different from the data shown in Figure 2-18.

```
                SYSTEM Tablespace, Space is in Oracle Blocks (2048 Bytes/Block)

ALLOCATED    FREE   %FREE     AVG/FRAG  LARGEST   FRAGMENTS   DB_FILES   ROLLBACK
---------  ------  ------    --------  --------  ----------  ---------  ---------
   33000   21448   64.99        7149      2148           3          1       1750
```

Figure 2-18. System Tablespace Screen

   See Chapter 9, “Database Environment,” and Appendix A, “Summary of Commands,” in *INTUITY™ CONVERSANT® System Version 6.0 Administration*, 585-310-591, for information on the **dbfrag** command.

2. If the number in the %FREE field is less than 10, add more space to the database.

   See Chapter 9, “Database Environment,” in *INTUITY™ CONVERSANT® System Version 6.0 Administration*, 585-310-591, for information on increasing the database size.

   You have completed this procedure.

Extents Diagnostics

An extent is an user defined unit of storage in the ORACLE “storage” clause when defining an ORA2CLE object. It is used as MINEXTENTS or MAXEXTENTS in the storage clause. An ORACLE object (that is, a table, an index, a rollback segment) grows one extent in size each time the object needs to be expanded.

When the maximum allowed number of extents is reached, the object will not be able to grow further. The object needs to be redefined so that either the size of each extent is increased or the initial object size is increased, to reduce the number of extents required for the storage of this object.

The maximum allowed number of extents in an INTUITY CONVERSANT system is 121.

To check the number of extents, do the following:

1. Enter **dbused**

   The system displays the Space Allocated screen (Figure 2-19).

   NOTE:
   The data in your Space Allocated screen may be different from the data shown in Figure 2-19.

```
Usage for “sti/sti”


                Space allocated to objects, Oracle Blocks (2048 Bytes/Block)

NAME                 TYPE            BLOCKS    MBYTES  EXTENTS  MAX_EXTENTS
------------------   -------------- --------  --------  -------  ------------
CCASUM               TABLE               10       .02        1          121
TRASUM               TABLE               10       .02        1          121
ABCD                 TABLE               10       .02        1          121
CCA                  TABLE              200       .39        1          121
EVSUM                TABLE               10       .02        1          121
RCS                  TABLE             2405      4.70      121          121
CDHSUM               TABLE               10       .02        1          121
EVENTS               TABLE             1025      2.00        1          121
CALL                 TABLE              515      1.01        1          121
SERVICE              TABLE              515      1.01        1          121
LDBCOLS              TABLE               10       .02        1          121
E1                   INDEX             1025      2.00        1          121
C1                   INDEX              515      1.01        1          121
S1                   INDEX              515      1.01        1          121
```

Figure 2-19. Space Allocated Screen

2. Compare the value in the EXTENTS column to the value in the MAX_EXTENTS column.
3. If the value in the EXTENTS column is greater than or equal to the value in the MAX_EXTENTS column, the table has reached its maximum size.
4. Redefine the database table storage. See Chapter 9, "Database Environment," in *INTUITY™ CONVERSANT® System Version 6.0 Administration*, 585-310-591, for information on increasing the database size.

   You have completed this procedure.

ORACLE Network Diagnostics

To check the ORACLE network, do the following:

1. Determine the machine name. See Chapter 9, "Database Environment," in *INTUITY™ CONVERSANT® System Version 6.0 Administration*, 585-310-591.
2. Enter **telnet *host_name***

   where *host_name* is the name of the remote machine to which the database process is connected.

   If the log in prompt appears on the screen, the network appears to be functioning properly. Continue with Step 3.

   If the log in prompt does not appear on the screen, the network is not functioning properly. Contact the network support personnel for help.
3. Press Ctrl-d to return to the local machine.
4. Enter **netstat -a**

   The system displays a table similar to the following table:

Active Internet connections (including servers)

Proto	Recv-Q	Send-Q	Local Address	Foreign Address	(state)
tcp	0	0			ESTABLISHED
tcp	0	0			ESTABLISHED
tcp	0	0			LISTEN
tcp	0	0			LISTEN
tcp	0	0			
tcp	0	0			
tcp	0	0			

5. Verify that the remote machine name appears on the screen under the *Foreign Address* column and the corresponding *state* field shows ESTABLISHED.

   If the remote machine name does not appear, contact network support personnel for help.

   If the remote machine name appears on the screen, verify that the ORACLE SQL*Net package is installed on the remote machine.

6. Verify that the network tunable parameters are correct according to the recommendations in the *INTUITY™ CONVERSANT® System Version 6.0 Communication Development*, 585-310-763.

7. Verify the database connection by completing the following Steps a through c:

   a. Invoke the ORACLE utility SQL*PLUS by entering **/oracle/bin/sqlplus sti/sti**

      The system displays the following message:

      `SQL>`

   b. Connect the SQL*PLUS session to the remote database by entering **connect sti/sti \@T:*host_name*:*DB_SID*;**

      The *host_name* is name of the remote machine and the *DB_SID* is the name of the remote database obtained in the DB_SID field in Database Access ID Table under Database Administration. See Chapter 9, “Database Environment,” in *INTUITY™ CONVERSANT® System Version 6.0 Administration*, 585-310-591.

      NOTE:
      You must type a backslash sign (an escape character) following the *sti/sti* and before the @sign.

   c. If the screen displays the following message the network and remote database are functioning.

      `connected`

      Continue with Step d.

      If `connected` does not appear on the screen, contact the database administrator of the remote machine for help.

   d. Exit from the SQL*PLUS utility by entering **quit**

You have completed this procedure.

TDM Bus Diagnostics

The TDM Bus can be diagnosed:

- From the command line
- Through the INTUITY CONVERSANT windows

Using the Command Line

To diagnose the TDM Bus using the command line, do the following:

1. Confirm that the VIS associates the suspect card with "tdm1," by entering **display card** <***card number***>

   where *card number* is the suspect card.

   If the card is not configured for tdm1, there is a configuration error. Complete the following Steps a through f:

   a. Record the current system configuration and service assignments. See "Viewing a Configuration" procedure in Appendix A, "System Configuration".

   b. Stop the voice system. See "Stopping the Voice System" in Chapter 3, "Common System Procedures".

   c. Move the system configuration and service assignments by entering **mv /gendb/shmem/devtbl /gendb/shmem/devtbl.old**

   d. Start the voice system. See "Starting the Voice System" in Chapter 3, "Common System Procedures".

   e. Reconfigure the system. See "Specifying a New Configuration" procedure in Appendix A, "System Configuration".

2. To confirm that the TDM master/slave configuration is appropriate, enter **display card all |pg**

   NOTE:
   The | before *pg* is a pipe symbol, not a lower case *L*.

   The system displays the Circuit Card Configuration screen (Figure 2-20).

   NOTE:
   The data in your Circuit Card Configuration screen may be different from the data shown in Figure 2-20.

```
CARD 0     STATE: Inserv        CLASS: Digital (E1)                O.S.INDEX: 0
           NAME:  AYC21         OPTIONS: master1,tdm1,PRI1,DCHAN
           FUNCTION: PRI

CD.PT    CHN     STATE      STATE-CHNG-TIME  SERVICE-NAME PHONE    GROUP  OPTS TYPE
 0.0       0     Manoos     Oct 25 17:25:32  -            -        4      tdm  FRM
 0.1       1     Inserv     Oct 25 17:32:48  -            -        4      tdm  PRIB
 0.2       2     Inserv     Oct 25 17:32:47  -            -        4      tdm  PRIB
 0.3       3     Inserv     Oct 25 17:29:46  -            -        4      tdm  PRIB
 0.4       4     Inserv     Oct 25 17:32:46  -            -        4      tdm  PRIB
 0.5       5     Inserv     Oct 25 17:29:46  -            -        4      tdm  PRIB
 0.6       6     Inserv     Oct 25 17:29:46  -            -        4      tdm  PRIB
 0.7       7     Inserv     Oct 25 17:29:45  -            -        4      tdm  PRIB
 0.8       8     Inserv     Oct 25 17:29:45  -            -        4      tdm  PRIB
 0.9       9     Inserv     Oct 25 17:29:44  -            -        4      tdm  PRIB
 0.10     10     Inserv     Oct 25 17:29:45  -            -        4      tdm  PRIB
 0.11     11     Inserv     Oct 25 17:29:44  -            -        6      tdm  PRIB
 0.12     12     Inserv     Oct 25 17:29:44  -            -        6      tdm  PRIB
 0.13     13     Inserv     Oct 25 17:29:44  -            -        6      tdm  PRIB
 0.14     14     Inserv     Oct 25 17:29:43  -            -        6      tdm  PRIB
 0.15     15     Inserv     Oct 25 17:29:44  -            -        6      tdm  PRIB
 0.16     16     Inserv     Oct 25 17:29:21  -            -        6      tdm  PRID
 0.17     17     Inserv     Oct 25 17:29:43  -            -        6      tdm  PRIB

:
```

Figure 2-20. Circuit Card Configuration Screen

3. Confirm that there is only one card associated with the following configurations for tdm1.

   - master1
   - master2
   - master3

   There can be multiple cards designated slave.

   Use (ENTER) to page through the Circuit Card Configuration screen.

   If more than one card is configured as `master1`, `master2`, or `master3`, there is a configuration error. Complete the following Steps a through e:

   a. Record the current system configuration and service assignments. See "Viewing a Configuration" procedure in Appendix A, "System Configuration".

   b. Stop the voice system. See "Stopping the Voice System" in Chapter 3, "Common System Procedures".

   c. Move the system configuration and service assignments by entering **mv /gendb/shmem/devtbl /gendb/shmem/devtbl.old**

d. Start the voice system. See "Starting the Voice System" in Chapter 3, "Common System Procedures".

e. Reconfigure the system. See "Specifying a New Configuration" procedure in Appendix A, "System Configuration".

4. Shutdown the operating system. See "Shutting Down the Operating System" in Chapter 3, "Common System Procedures".

5. If the problem persists, check the TDM resistors. See "Checking the Terminating Resistors" above for the procedure.

6. If the problem persists, check the circuit card switch settings. See "Checking the Switch Settings" above for the procedure.

You have completed this procedure.

Using the INTUITY CONVERSANT Windows

To diagnose the TDM Bus using the INTUITY CONVERSANT windows, do the following:

1. Starting at the Voice System Administration menu (Figure 2-1), select

```
> Configuration Management
    > System Control
        > Diagnose
            >Diagnose Equipment
```

The system displays the Diagnose Equipment Window (Figure 2-2).

2. Enter **bus** in the `Equipment to diagnose` field.

The system automatically places a 1 in the `Equipment Number` field.

3. If you want to conduct an immediate diagnosis, enter **y** in the `Immediate diagnosis` field.

NOTE:
Immediate diagnosis takes the cards, attached to the TDM bus, out of service immediately even if a call is in progress.

If you do not want to conduct an immediate diagnosis, enter **n** in the `Immediate diagnosis` field.

NOTE:
The system waits until all specified channels are idle before beginning the diagnosis.

4. Press F3 (Save).

   The system removes the cards attached to the TDM bus from service and runs the diagnostics.

   If the TDM bus passes the diagnostics, the system displays the following message:

   `Diag <bus>, Passed`

   If the TDM bus did not pass the diagnostics, replace the cable.

Voice Port Loop Around Test

To perform a voice port loop around test, do the following:

1. Starting at the Voice System Administration menu (Figure 2-1), select

   > Configuration Management
   > System Control
   > Diagnose
   >Voice Port Loop Around Test

   The system displays the Voice Port Loop Around Test window (Figure 2-21).

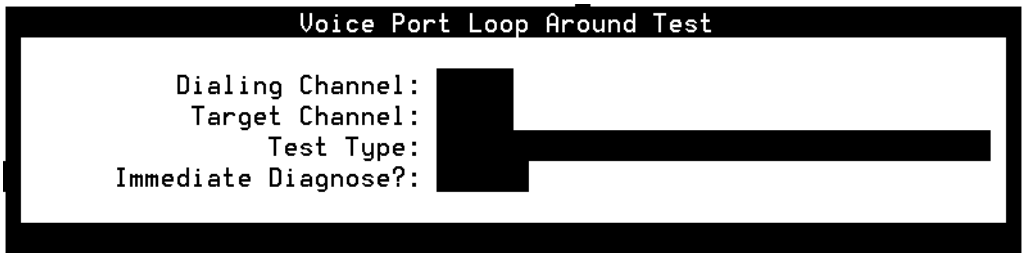

Figure 2-21. Voice Port Loop Around Test Window

2. Enter a channel number in the `Dialing Channel:` field.

   The dialing channel is the channel which sends the signal used to diagnose the target channel.

   You can enter **AUTO** in this field to allow the system to choose the dialing channel.

3. Enter the number of the channel you want to diagnose in the `Target Channel:` field.

4. Enter a test type in the `Test Type:` field.

   The following tests can be run on the voice port:

   - `all`
   - `code`
   - `fax receive`
   - `fax transmit`
   - `gain control`
   - `loop current/dial tone detection`
   - `manipulation of hook state`
   - `play`
   - `ring detection`
   - `speed control`
   - `touch tone receive`
   - `touch tone transmit`

   NOTE:
   The gain control, loop current/dial tone detection, manipulation of hook state, ring detection, speed control, touch tone receive, and touch tone transmit test types will be run during a voice port loop around test regardless of the entry in the `Test Type:` field.

5. Enter **no** in the `Immediate Diagnose?` field.

   If you enter **yes** in this field the diagnosis will be performed immediately regardless of the current state of the dialing channel.

   NOTE:
   Immediate diagnosis cannot be done when **AUTO** is entered in the `Dialing Channel:` field.

6. Press F3 (Save).

   The system completes the diagnostics and displays the Voice Port Loop Around Test Results screen (Figure 2-22).

```
                Voice Port Loop Around Test Results


     manipulation of hook state        pass
     gain control                      pass
     speed control                     pass
     ring detection                    pass
     touch tone transmit               pass
     play                              pass
     touch tone receive                pass
     record                            pass
     fax receive                       pass
     fax transmit                      pass
     loop current/dial tone detection  pass

Press Enter to continue.
```

Figure 2-22. Voice Port Loop Around Test Results Screen

7. Press ENTER.

   The system displays the Voice Port Loop Around Test window (Figure 2-21).

You have completed this procedure.

ASAI Trace Utility

To invoke the ASAI trace feature, type trace dip7 at the system prompt. Additional VIS processes can be monitored by adding arguments to the command (for example, trace dip7 chan 1).

NOTE:
All ASAI trace information displayed by trace is preceded by `ASAI:`. If trace is used to monitor other VIS processes, that information is preceded by other key words.

To cancel a trace command, press the DELETE key. The Trace Level parameter in the ASAI Parameters screen controls the amount of detail that is displayed when you use the trace dip 7 command to monitor messages and events being processed by the ASAI system. The trace feature facilitates the debugging of new applications and is an optional feature that is not required for normal system operations.

Three Trace Levels are available:

- The Low setting displays only ASAI error and warning conditions.
- The Normal setting displays information pertaining to the process of the A_Callinfo, A_Event, A_RouteSel, and A_Tran script actions, in addition to the information displayed by the Low setting. Such information is useful when attempting to debug new application scripts which use these actions.
- The High setting provides additional information on ASAI messages that are sent and received between the VIS and the DEFINITY Generic 3i PBX, in addition to the information displayed by the Low and Normal settings.

Low Detail

The Low setting displays only ASAI error and warning conditions. This is the default setting. Use this setting when there is live traffic to minimize processing overhead from the trace feature.

Error message preceded by `ASAI: ERROR:` typically indicate a malfunction in the processing of the ASAI link between the VIS and the PBX, an improperly written script, or an incorrect configuration. Error messages are displayed by trace to give additional insight into problems that are reported as system messages and as error codes in the Return Fields of the external actions. If you receive an error messages in the Message Log Report. The ASAI-related system messages are numbered from ASAI001 through ASAI031 and are discussed in Chapter 3, “System Message Listings.” Follow the instructions provided for the message to remedy the problem.

If you receive error messages in the trace output and no ASAI system messages are reported, you may be experiencing a problem with the A_Callinfo, A_Event, A_RouteSel, or A_Tran actions. In this case, one of these actions is probably returning an error code in its Return Field and also in the Cause Value field.

If you receive neither ASAI system message nor error return codes from an ASAI script action but are still receiving error messages in the trace output, you are probably experiencing a system problem and should escalate the problem.

Warning messages indicate a low-severity problem detected by the ASAI system. These message are preceded by `ASAI: WARNING:` and are usually the result of an incorrectly configured system or a manual out of service (manoos) ACD, VDN, or CTL domain that is receiving messages from the PBX. These messages may also correspond to a system message that appears in the Message Log Report. For example, the following message is displayed if you use A_Tran to transfer to an extension for which there is no domain administered in the Domain Administration screen.

```
ASAI: WARNING: Event ‘C’ Discarded, no CTL Domain for Ext
‘1234’
```

At the same time, system message number ASAI031 appears in the Message Log Report. Similarly, the following message is displayed if you use A_Tran to transfer to an extension or domain which is not in service.

```
ASAI: WARNING: Event ‘C’ Discarded, Domain ‘name’ not active
```

In this case no system message appears in the Message Log Report because it is not necessarily considered an error.

Normal Detail

In addition to the information displayed by the Low setting, the Normal setting displays information pertaining to the processing of the A_Callinfo, A_Event, A_RouteSel, and A_Tran script actions. Such information is useful when attempting to debug new application scripts which use these actions. The format is specific to each ASAI action being processed.

A_Callinfo trace information

When A_Callinfo is used in a voice script on a Tip/Ring or LST1 channel, trace displays the following information. The first line indicates which channel requested the information. The remaining indented lines contain the information that is returned to the A_Callinfo action in the voice script.

```
ASAI: A_Callinfo: Sending Info for chan 1
ASAI:Calling party Number:’’
ASAI:Called Party Number: ‘5100’
ASAI:Switch Data: ‘’
ASAI:Trunk Group Id: ‘5’, Call Id: ‘163’
ASAI:Cause Value: ‘0’, Return Field: ‘0’
```

If an error occurs in the processing of A_Callinfo, a message preceded by `ASAI: Error: A_Tran` is displayed along with a description of the problem.

A_Event trace information

When A_Event is used in a monitoring or routing script that is assigned to a domain, the following trace messages are examples of what is displayed when each event is reported.

```
ASAI: A_Event: Reporting Event ‘C’ to Domain
    ‘name’
ASAI:Connected Party Number: ‘5609’
ASAI:Calling Party Number: “, Trunk Grp Id: ‘5’
ASAI:Called Party Number: ‘5100’
ASAI:Switch Data:”
ASAI:Call id: ‘170’, Other Call Id: ‘160’
ASAI:LAI Display Info: “
```

```
ASAI:VIS Data: “
ASAI:Routing Id: ‘30’
ASAI:Return Field: ‘67’
```

The first line indicates the type of event that is reported and the domain to which it is reported. The event type is one of the following:

- A (ABANDON) — The caller was abandoned before the call was answered.
- C (CONNECT) — The call was alerted or connected. See the information on Parameter Administration in Chapter XX of the XX for a description of the CONNECT Event field.
- E (END) — The call has ended after being answered.
- R (ROUTE REQUEST) — PBX is requesting the call be routed.

The indented lines that follow the first line contain information that is returned in the corresponding fields of the A_Event action form.

A_RouteSel trace information

When A_RouteSel is used in a routing script that is assigned to an RTE domain, the following trace messages are examples of what is displayed.

```
ASAI: A_RouteSel: Routing call in Domain ‘name’
     (Route ID 1234)
ASAI:Destination Number: ‘5019’
ASAI:Split Extension: ‘’
ASAI:Priority Call? Yes
```

If the Route Select could not be sent to the PBX, a trace message preceded by `ASAI: ERROR: A_RouteSel:` is displayed along with a description of the problem. In come cases a cause value is also displayed. See Chapter 6 of *INTUITY™ CONVERSANT® System Version 6.0 Application Development with Script Builder*, 585-310-763, for a list of A_RouteSel Cause Values.

A_Tran trace information

When A_Tran is used in a voice script on a T/R or LST1 channel, trace displays messages such as the following indicating a successful transfer.

```
ASAI: A_Tran: requested on chan 1
ASAI: A_Tran: Taking Control of call on chan 1
      (CLID 304)
ASAI: A_Tran: Placing caller on hold, chan 1
ASAI: A_Tran: Make Call on chan 1 (CLID 308)
ASAI:Destination Number: ‘5019’
ASAI:Split Ext: ‘’
ASAI:Priority Call? No
```

```
ASAI: A_Tran: Make Call completed on chan 1
ASAI:Call State: 'ALERTING'
ASAI: A_Tran: Merging calls on chan 1
```

The first line indicates which channel requested the transfer.

NOTE:
Each line beginning `ASAI: A_Tran:` indicates the beginning of the next processing step required to perform the transfer operation and contains the channel number on which the operation is taking place. See Chapter 6 of *INTUITY™ CONVERSANT® System Version 6.0 Application Development with Script Builder*, 585-310-763, for an explanation of the steps required to perform a transfer. Processing steps may not be displayed contiguously depending on the amount of activity in the system (that is, other trace statements may appear in between each processing step for A_Tran).

The indented lines contain additional information about the current processing step. The Make Call step is followed by three lines of information which correspond to input fields in the A_Tran action form. The Make Call completed steps is followed by a line indicating the outcome of the call. A successful transfer is indicated by the Merging calls message.

In the following example the outbound call (Make Call completed) was to a busy destination. In this case, the transfer (merge) was not attempted and the caller was reconnected to the voice script.

The sequence ends with the following message:

```
ASAI: A_Tran: requested on chan 1
ASAI: A_Tran: Taking Control of call on chan 1
      (CLID 304)
ASAI: A_Tran: Placing caller on hold, chan1
ASAI: A_Tran: Make Call on chan 1 (CLID 308)
ASAI:Destination Number: '5019'
ASAI: Split Ext: ''
ASAI:Priority Call? No
ASAI: A_Tran: Make Call completed on chan 1
ASAI:Call State: 'BUSY'
ASAI: A_Tran: Dropping call on chan 1
ASAI: A_Tran: Reconnecting caller on chan 1
ASAI: A_Tran: Relinquishing control of chan 1
```

Should an error occur in one of the processing steps, trace displays a message preceded by `ASAI: ERROR: A_Tran:` with a description of the problem.

NOTE:
If you receive error return codes from the A_Tran action and do not see errors while tracing dip7, the problem is detected by the voice script before making the request to the ASAI subsystem.

High Detail

In addition to the information displayed by the Low and Normal settings, the High setting gives additional information on ASAI messages that are sent and received between the VIS and the DEFINITY Generic 3i PBX. High detail causes trace to display information concerning call event and routing event messages as well as requests for domain enable/disable, channel login/logout, and heartbeat.

Call events

ASAI messages (call events) received from the PBX contain information about a call on a domain. This information may be useful when attempting to debug an application script which is monitoring the progress of calls on the PBX. The format of the call event message is as follows:

```
ASAI: Received EVENT on Domain “name” (CLID num CID
num)
```

The *EVENT* can be one of the following

- ALERTING — The call is ringing at an extension.
- CALLEND — All parties have dropped from the call causing the call to end.
- CONFERENCED — The call has been conferenced.
- CONNECTED — The call has been answered.
- CUT THROUGH — The call is interworking with a non-ISDN trunk.
- DENIAL — The call has been routed to an invalid number (intercept).
- DROP — A party on the call has dropped from the call.
- OFFERED — The call has entered the specified domain.
- QUEUED — The call has been placed in a queue and is awaiting delivery to an extension.
- 3P CALLEND — A call that was originated by A_Tran has ended.
- TRANSFERRED — The call has been transferred.
- TRUNK SEIZED — The call has been routed to a trunk and the trunk has been seized.

The *name* is the name of domain which receives the event as specified in the Domain Administration screen. See Chapter 4 of *INTUITY™ CONVERSANT® System Version 6.0 Administration*, 585-310-591, for additional information.

The name will be null for call events received that are not directly associated with a domain administered in the Domain Administration screen (for example, call events received for an outbound call placed by the A_Tran script action). The CLID *num* is the ASAI Cluster ID that identifies the specified domain. The CID

num is the Call ID that identifies the call. The PID is the party ID that identifies which Party dropped from the call and is reported with a DROP message only.

Routing Events

There are two ASAI messages received from the PBX which contain routing information. This information may be useful when debugging a routing application script which is assigned to a RTE domain. The following trace message is printed for each route request received. The format of the trace message is as follows:

```
ASAI: Received ROUTE REQUEST on Domain ‘name’ (Route ID
num)
```

Another trace message is printed when the PBX has acknowledged or canceled a previous route request. The format of this message is as follows:

```
ASAI: Received ROUTE END on Domain ‘name’ (Route ID
num)
ASAI: Cause: X
```

NOTE:
The second line indicates the reason why the route requested ended. After the receipt of this message a Route Selection can no longer be made (that is, A_RouteSel fails) for the specified Route ID. The Route ID is a number which identifies a particular route request.

Domain Enable/Disable Requests

When ACD or VDN domains are enabled or disabled, a message must be sent to the PBX requesting to activate or deactivate the sending of call events for the domain. Following are examples of the trace output that appears when these messages are sent.

```
ASAI: Sending ENABLE for domain ‘name’, ext ‘4321’,
type 1 (CLID 224)
ASAI: Sending DISABLE for domain ‘name’, ext ‘5678’
type 2 (CLID 364)
```

The *name* and *ext* displayed correspond to the parameters administered for the domain in the Domain Administration screen. Note that Type 1 domains are ACD domains and Type 2 domains are VDN domains.

If an enable or disable request fails, a message is displayed which is preceded by `ASAI: ERROR: ENABLE Domain:` along with a description of the problem. If a Cause Value is provided in the message, the request was denied by the PBX.

Channel Login/Logout Requests

In order to log a channel in or out, an ASAI message must be sent to the PBX. Following are examples of the trace output that appears when these messages are sent.

```
ASAI: Sending LOGIN for chan 1, ext 1234 (CLID 778)
ASAI: Sending LOGOUT for chan1, ext 1234 (CLID 388)
```

The chan and ext displayed correspond to the parameters administered for the domain in the Channel Administration screen.

If a login or logout request fails, a message is displayed which is preceded by `ASAI: ERROR: LOGIN CHANNEL:` along with a description of the problem. If a Cause Value is provided in the message, the request was denied by the PBX.

Heartbeat Requests

To insure that the PBX and the VIS are in constant communication event when there is no traffic, messages are sent back and forth between the two systems. These messages, called heartbeat messages, typically appear only after periods of idleness of longer than 1 minute.

Generally, these trace messages can be ignored unless you suspect a loss of communication between the PBX and the VIS. The messages should alternate every minute during idle periods. Following are examples of these heartbeat messages:

```
ASAI: Received Heartbeat (CLID 7898 ind 1)
ASIA: Sending Heartbeat (CLID 2345)
```

Common System Procedures

3

Overview

This chapter describes procedures for:

- Cartridge tape and diskette drive operation
- Backup and restore
- Voice system administration
- Operating system administration

Purpose

The purpose of this chapter is to provide the information necessary to perform the most common procedures associated with the INTUITY™ CONVERSANT® system.

About Cartridge Drives and Tapes

Cartridge tapes provide for the storage of information used by the INTUITY CONVERSANT system. The MAP/100P reads information from and writes information to cartridge tapes through the tape drive. The tape drive is located in Bay 2.

When to Change Cartridge Tapes

The manufacturers of the cartridge tapes recommend that you replace a tape after approximately 30 full-capacity write or read operations. For example, if two tapes are being alternated for the unattended nightly backup, replace both tapes every two months.

Inserting and Removing Cartridge Tapes

This section details the procedures for inserting and removing cartridge tapes from the 2-Gbyte tape drive.

Inserting the Cartridge Tape

To insert a 2-Gbyte cartridge tape, do the following:

1. Locate the tape drive on the front of the MAP/100P (Figure 3-1).

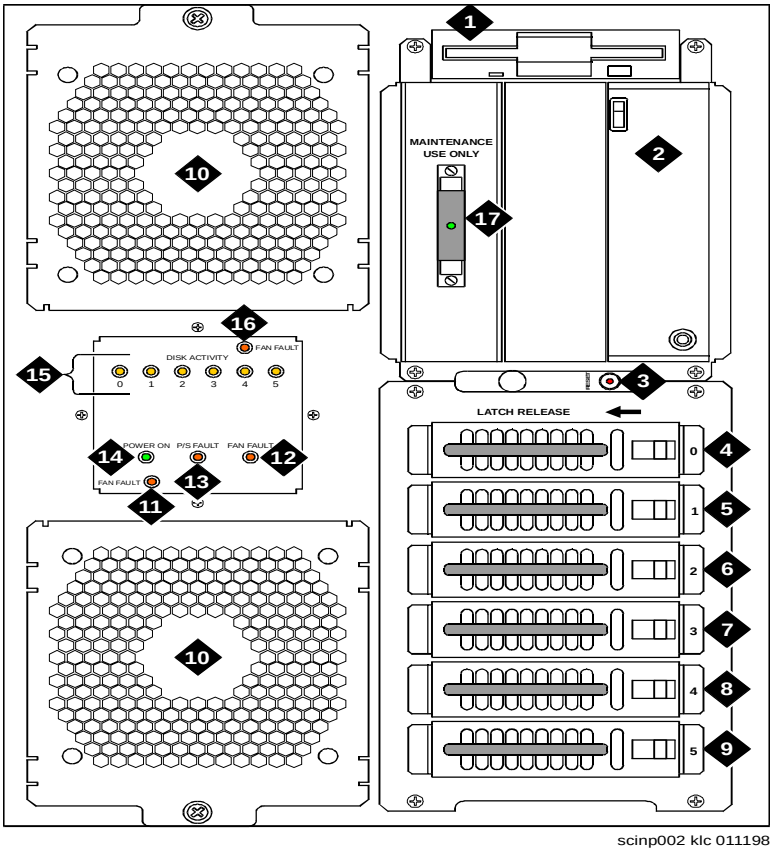

scinp002 klc 011198

1. Diskette drive
2. Cartridge tape drive
3. Reset push button
4. Hard Disk Drive 0
5. Hard Disk Drive 1
6. Hard Disk Drive 2
7 Hard Disk Drive 3
8. Hard Disk Drive 4
9. Hard Disk Drive 5
10. Circuit card cage fan
11. Fan fault LED
12. Fan fault LED
13. Power supply fault LED
14. Power On LED
15. Hard disk drive activity LEDs
16. Fan fault LED
17. SCSI terminator

Figure 3-1. Front View of the MAP/100P

2. Check the read/write dial to make sure that the tape is not write-protected. The small dial on the front of the tape should be in the horizontal position.
3. Complete Steps a through c to insert the tape in the drive.
   a. Press the button on the upper right corner of the drive to open the drive door.
   b. Insert the tape (Figure 3-2).
   c. Close the door to push in the tape.

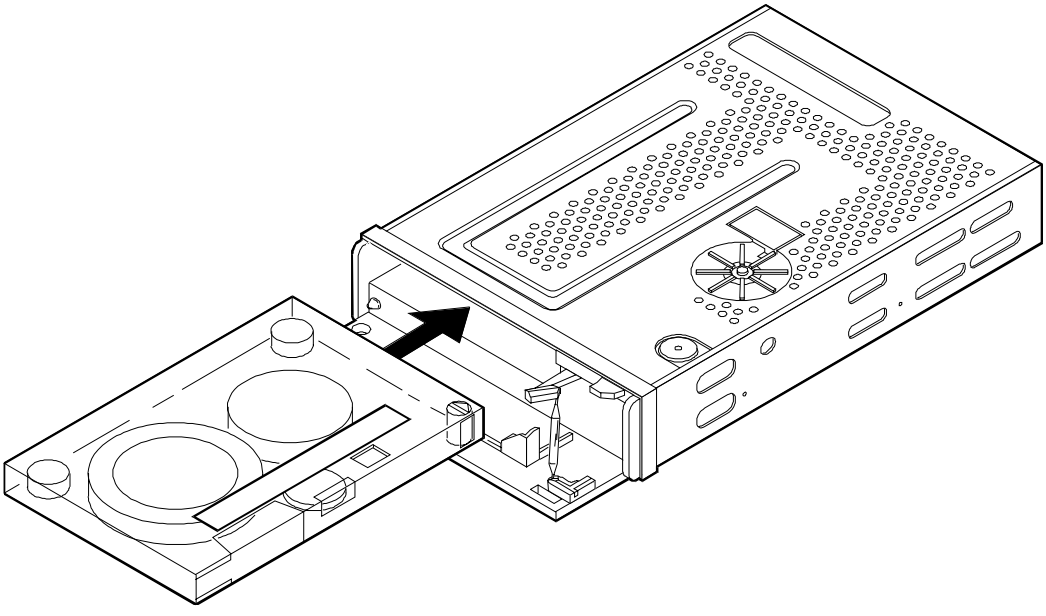

Figure 3-2. Tape Insertion with a 2-Gbyte Tape Drive

NOTE:
The light on the tape drive will blink when the drive is in use. If the light is lit and not blinking, the tape drive is idle.

Removing the Cartridge Tape

To remove a cartridge tape from a 2-Gbyte tape drive, do the following:

CAUTION:
You can only remove the tape when the drive is idle, that is, when the light is not blinking.

1. Press the button on the upper right corner of the drive to reveal part of the tape.
2. Pull out the tape.

About Diskette Drives and Diskettes

Diskettes can provide for the storage of information used by the INTUITY CONVERSANT system. If information must be transferred from an INTUITY CONVERSANT system without a LAN card, diskettes must be used.

Types of Diskettes

The INTUITY CONVERSANT system is not shipped with disks. If you need disks, obtain unformatted 3.5-inch disks. The disks can be either:

- High density (1.44-Mbyte)
- Low density (720-Kbyte)

Inserting and Removing Diskettes

This section details the procedures for inserting and removing diskettes.

Inserting the Diskette

To insert a diskette, do the following:

1. Locate the diskette drive on the front of the MAP/100P (Figure 3-1).
2. Check the read/write switch to make sure that the diskette is not write-protected.
3. Insert the diskette in the drive.

NOTE:
The light on the diskette drive is on when the drive is in use. If the light is not on, the diskette drive is idle.

Removing the Diskette

To remove a diskette, do the following:

1. Press the button on the lower right corner of the diskette drive to reveal part of the diskette.
2. Pull out the diskette.

CAUTION:
You can only remove the diskette when the drive is idle, that is, when the light is not on.

Backing Up the INTUITY CONVERSANT System

The following section describes the procedure for backing up your INTUITY CONVERSANT system.

NOTE:
The backup mechanisms described here should be used for backing up and restoring files on the same machine only.

The **mkimage** command backs up all files and speech to cartridge tapes. The **mkimage** command should only be used in the following situations:

- After initially loading a new system
- After upgrading to a new software release
- After upgrading hardware
- After reconfiguring the system

See Appendix A, "Summary of Commands," in *INTUITY™ CONVERSANT® V6.0 Administration*, 585-310-591, for additional information about the **mkimage** command.

Performing a System Backup

To conduct a full system backup using **mkimage**, do the following:

1. Log in as **root**.
2. Enter **mkimage**

   The system displays the following message:

   ```
   The UNIX kernel will be rebuilt now.  This will take
   some time.  Please wait.

   WARNING: This process will put the system in single
            user mode!!!

   Do you wish to continue (y/n)?
   ```

3. Enter **y**

   The system displays the following message:

   ```
   The system will now be put in single user mode.
   Re-login after the prompt and re-execute this command
   to continue the mkimage process.

   Console Login:
   ```

4. Continue with the next procedure, "Backing Up the Root File System."

Backing Up the Root File System

To back up the root file system, do the following:

1. Log in as **root**.
2. Enter **mkimage**

   The system displays the following message:

   ```
   Checking the system run level:  Please wait

   The system is in single user mode: Continuing

   The following are approximate tape counts required for
   this backup for various tape drive sizes

       150 Mbyte drive:        X tape(s)
       320 Mbyte drive:        X tape(s)
       525 Mbyte drive:        X tape(s)
       1.2 Gbyte drive:        X tape(s)
       2.0 Gbyte drive:        X tape(s)

   Be sure to number the cartridge tapes consecutively in
   the order they will be inserted.

   Label the tapes 'CONVERSANT Image Tape x' where x
   indicates the insertion sequence.  Also include the
   current date.

   Note: Very large files, such as database files, take
   several minutes to backup.  During this time you will
   not see any progress reported to the console.  If the
   tape drive is running and the system disk light is
   flashing, the operation is in progress.

   Please insert the first tape now.  Press 'ENTER' to
   start image tape creation.
   ```

3. Label the appropriate number of cartridge tapes.

   Label the tapes *CONVERSANT Image Tape x*, where x indicates the insertion sequence. Also include the current date on the label.

4. Insert the cartridge tape labeled "CONVERSANT Image Tape 1" into the cartridge tape drive. See "Inserting and Removing Cartridge Tapes" above for the procedure.
5. Press ENTER.

   The system takes approximately 30 minutes to load the information onto one cartridge tape.

   If your system backup requires more than one cartridge tape, the system displays the following message:

   ```
   End of medium on output
   Change to part 2 and press RETURN key. (q)
   ```

   If your backup requires more than one tape, complete Steps a through d:

a. Remove the cartridge tape labeled “CONVERSANT Image Tape 1” from the cartridge tape drive. See “Inserting and Removing Cartridge Tapes” above for the procedure.

b. Insert the cartridge tape labeled “CONVERSANT Image Tape 2” into the cartridge tape drive. See “Inserting and Removing Cartridge Tapes” above for the procedure.

c. Press (ENTER).

d. Repeat Steps a through c for all necessary cartridge tapes.

If your backup does not require more than one tape, continue with Step 6.

6. When the system displays the following message, remove the last cartridge tape from the cartridge tape drive. See “Inserting and Removing Cartridge Tapes” above for the procedure.

```
The image tapes will be verified now.
Make sure the tapes are inserted in the order they are
made.

Press ‘Enter’ to start verification.
```

7. Press (ENTER).

   The system displays the following message:

```
Please insert the first tape now.  Press ‘Enter’ to
continue.
```

8. Insert the cartridge tape labeled “CONVERSANT Image Tape 1” into the cartridge tape drive. See “Inserting and Removing Cartridge Tapes” above for the procedure.

9. Press (ENTER).

   The system takes as long to verify a cartridge tape as it did to create it.

   The system will prompt for additional tapes if necessary.

10. If your system has speech files located on a second disk, perform the next procedure, “Backing Up the Speech Files.”

    If your system has only one disk, or is mirrored, continue with the procedure, “Verifying the Back Up.”

Backing Up the Speech Files

If your system contains speech files on Hard Disk Drive 2, the system will display the following message:

```
The following are approximate tape counts required for
this backup for various tape drive sizes
```

```
150 Mbyte drive:        X tape(s)
320 Mbyte drive:        X tape(s)
525 Mbyte drive:        X tape(s)
1.2 Gbyte drive:        X tape(s)
2.0 Gbyte drive:        X tape(s)
```

```
Be sure to number the cartridge tapes consecutively in
the order they will be inserted.

Label the tapes 'CONVERSANT Speech Tape x' where x
indicates the insertion sequence.  Also include the
current date.

Note: Very large files, such as database files, take
several minutes to backup.  During this time you will
not see any progress reported to the console.  If the
tape drive is running and the system disk light is
flashing, the operation is in progress.

Please insert the first tape now.  Press 'ENTER' to
start image tape creation.
```

To back up the speech files, using the mkimage command, do the following:

1. Label the appropriate number of cartridge tapes.

   Label the tapes 'CONVERSANT Speech Tape x' where x indicates the insertion sequence. Also include the current date on the label.

2. Insert the cartridge tape labeled "CONVERSANT Speech Tape 1" into the cartridge tape drive. See "Inserting and Removing Cartridge Tapes" above for the procedure.

3. Press (ENTER).

   The system takes approximately 30 minutes to load the information onto one cartridge tape.

   If your system backup requires more than one cartridge tape, the system displays the following message:

   ```
   End of medium on output
   Change to part 2 and press RETURN key. (q)
   ```

   If your backup requires more than one tape, complete Steps a through d:

   a. Remove the cartridge tape labeled "CONVERSANT Speech Tape 1" from the cartridge tape drive. See "Inserting and Removing Cartridge Tapes" above for the procedure.

   b. Insert the cartridge tape labeled "CONVERSANT Speech Tape 2" into the cartridge tape drive. See "Inserting and Removing Cartridge Tapes" above for the procedure.

c. Press (ENTER).

d. Repeat Steps a through c for all necessary cartridge tapes.

If your backup does not require more than one tape, continue with Step 4.

4. When the system displays the following message, remove the last cartridge tape from the cartridge tape drive. See "Inserting and Removing Cartridge Tapes" above for the procedure.

```
The speech tapes will be verified now.
Make sure the tapes are inserted in the order they are
made.

Press 'Enter' to start verification.
```

5. Press (ENTER).

   The system displays the following message:

```
Please insert the first tape now.  Press 'Enter' to
continue.
```

6. Insert the cartridge tape labeled "CONVERSANT Speech Tape 1" into the cartridge tape drive. See "Inserting and Removing Cartridge Tapes" above for the procedure.

7. Press (ENTER).

   The system takes as long to verify a cartridge tape as it did to create it.

   The system will prompt for additional tapes if necessary.

8. Continue with the procedure, "Verifying the Back Up."

Verifying the Back Up

When the system is done verifying a cartridge tape it automatically reboots, returns to multi-user format, and displays the console login. To verify the back up, do the following:

1. Log in as **root**.

2. Enter **vi /SaveVsData/mkimage.log**

   If the system displays the following message, the mkimage back up was successful.

```
Creation and verification of the CONVERSANT Image Tape
is complete.
```

   If the system does not display this message, the mkimage back up was not successful. Repeat the procedure.

Performing Other Backups

See the *Novell UnixWare Backup and Restore Services* book, which is part of the *UnixWare Documentation Set*, 585-350-908, for information on:

- Establishing an automatic backup using **bkreg**
- Backing up the UnixWare system
- Performing a UnixWare incremental backup
- Copying files using **cpio**
- Backing up non-Script Builder Applications
- Backing up a database

See *INTUITY™ CONVERSANT® V6.0 Application Development with Script Builder*, 585-310-760, for information on:

- Backing up Script Builder applications

See *INTUITY™ CONVERSANT® V6.0 Speech Development, Processing and Recognition*, 585-310-762, for information on:

- Backing up speech files using **spsav**

Restoring the INTUITY CONVERSANT System

The following section describes the procedure for restoring your INTUITY CONVERSANT system.

Performing a System Restoration

To perform a system restoration, do the following:

1. From Chapter 8, ‘‘Installing Base System Software’’,” perform the following procedures:
   a. “Beginning the UnixWare Installation”
   b. “Setting Up the UnixWare Environment”
   c. “Initializing the Hard Disk Drives”
   d. “Transferring the UnixWare Files”

   The system displays the Application Server Media Type screen (Figure 3-3).

```
The Application Server software is available on diskette or tape
or network server.  You must select the source you will use to
install the software.









Your choices are:

1. Diskette Drive 1
2. Unixware for Intuity CONVERSANT
3. Network Install Server
4. Intuity Image/Snap Tape

Press a number between ‘1’ and ‘4’ followed by 'ENTER':
```

Figure 3-3. Application Server Media Type Screen

2. Insert your system backup cartridge tape labeled “CONVERSANT Image Tape 1” into the tape drive. See “Inserting and Removing Cartridge Tapes” above for the procedure.
3. Type **4**
4. Press (ENTER).

   The system displays the Insert Tape screen (Figure 3-4).

```
Please insert the Intuity Image/Snap cartridge tape into the tape
drive and press 'ENTER'.









Your choices are:

1. The tape has been inserted in the tape drive.
2. Go back to previous menu.

Press '1' or '2' followed by 'ENTER':
```

Figure 3-4. Insert Tape Screen

5. Press (ENTER).

   This will accept the default of 1 to indicate the tape has been inserted and is ready for access.

   The system displays the following message:

   ```
   Installation in progress.  This will take several
   minutes.  Please do not remove the tape.
   ```

   The installation process will take two to three hours to complete. When the system installation is complete the system will display a message stating that you are able to remove the tape from the drive.

6. Remove the tape labeled "CONVERSANT Image Tape 1" from the tape drive. See "Inserting and Removing Cartridge Tapes" above for the procedure.

7. Press (ENTER).

   The system reboots.

8. If your system has more than one hard disk drive clean the secondary hard disk drives. See "Cleaning a Hard Disk Drive," in Chapter 6, "Replacing the Hard Disk Drive"," for the procedure.

CAUTION:
Do not remove the partition on the root hard disk drive.

9. Reboot the system. See "Rebooting the UNIX System," below, for the procedure.
10. Perform the "Activating the Volume Manager," procedure in Chapter 8, "Installing Base System Software".

The system is now ready for you to restore speech files or activate mirroring. To restore the speech files, see "Saving and Restoring," in Chapter 1, "Overview of Speech," in *INTUITY™ CONVERSANT® Version 6.0 Speech Development, Recognition, and Processing*, 585-310-762. To activate mirroring, see "Mirroring," in Chapter 6, "Replacing the Hard Disk Drive".

Perfuming a System Restoration on a System which has been Upgraded from INTUITY CONVERSANT V5

CAUTION:
Do not perform this procedure on a system which has not been upgraded from INTUITY CONVERSANT V5.

CAUTION:
This procedure should only be performed once. After the procedure has been performed the upgraded INTUITY CONVERSANT V5 system has the same file structure as a factory supplied INTUITY CONVERSANT Version 6 system.

To perform a system restoration on a system which has been upgraded from INTUITY CONVERSANT V5, do the following:

1. Perform the procedure "Performing a System Restoration," above.
2. Enter **/usr/bin/change_volname**

You have completed this procedure.

Restoring the Database Directory from System Backup

CAUTION:
Current data, system traffic data, and application data may be lost depending on the date of the last system backup.

1. If the database system is running, perform the "Stopping the Database System" procedure below.

2. Perform the "Selective System Restore" procedure described in *Novell UnixWare Backup and Restore Services* book which is part of the *UnixWare Documentation Set*, 585-350-908. Specify the directory **/oracle/dbs**.
3. If there are other database files created outside the **/oracle/dbs** directory, perform the "Selective System Restore" procedure for each of the files. See the *Novell UnixWare Backup and Restore Services* book which is part of the *UnixWare Documentation Set*, 585-350-908, for this procedure.
4. Perform the "Starting the Voice System" procedure below to start the database and the voice system.

Administering the Voice System

Administering the voice system includes:

- Starting the voice system
- Stopping the voice system
- Shutting down the voice system

Starting the Voice System

You can stop the voice system from either the INTUITY CONVERSANT windows or the command line.

Using the INTUITY CONVERSANT Windows

To start the voice system, do the following:

1. Starting at the Voice System Administration menu (Figure 3-5), select

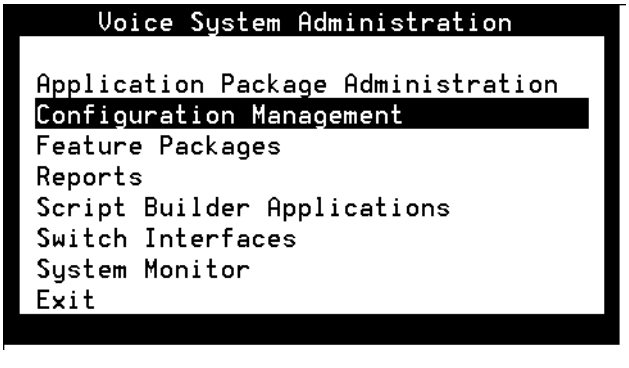

Figure 3-5. Voice System Administration Menu

```
> Configuration Management
    > System Control
        > Start Voice System
```

The system displays the following messages:

```
running bitmapmgr...
bitmapmgr completed.

Form Filler Audit complete. No errors found.

ORACLE RDBMS is already started.

The Voice System is starting

The Voice System is initializing cards

The Voice System is still initializing cards
Please wait...

Startup of the Voice system is now complete.

Hit acknowledge key to continue.
```

2. Press F1 (acknowledge).

   The system displays the System Control menu (Figure 3-6).

```
System Control

Diagnose
Renumber Voice Channels
Report Voice System Status
Shutdown System
Start Voice System
Stop Voice System
```

Figure 3-6. System Control Menu

Using the Command Line

To start the voice system, do the following:

1. Enter **start_vs**

   The system displays the following messages:

   ```
   running bitmapmgr...
   bitmapmgr completed.
   ```

   ```
   Form Filler Audit complete. No errors found.
   ```

   ```
   ORACLE RDBMS is already started.
   ```

   ```
   The Voice System is starting
   ```

   ```
   The Voice System is initializing cards
   ```

   ```
   The Voice System is still initializing cards
   Please wait...
   ```

   ```
   Startup of the Voice system is now complete.
   ```

Stopping the Voice System

You must stop the voice system to complete the following tasks:

- Replacing a component in the MAP/100P
- Performing routine backup and restore procedures

When the voice system is stopped, the entire system is placed in the idle state when all lines are free, the internal system tables are saved, and all processes are turned off.

The voice system can be stopped from either the INTUITY CONVERSANT windows or the command line.

Using the INTUITY CONVERSANT Windows

To stop the voice system, do the following:

NOTE:
Have the system administrator route calls away from the system before beginning this procedure.

1. Starting at the Voice System Administration menu (Figure 3-5), select

```
> Configuration Management
  > System Control
    > Stop Voice System
```

The system displays the Wait Time window (Figure 3-7).

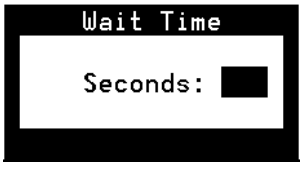

Figure 3-7. Wait Time Window

2. Enter a number between 60 and 600.

   This is the number of seconds you want the system to wait for all calls to clear before stopping the voice system.

3. Press F3 (save).

   The system displays the following messages:

   `The Voice System is now stopping.`

   `Initiating request to clear all calls in the next` *X* `seconds.`

   `Orderly idling of the system succeeded.`

   `After the voice system has completely stopped, use the "Start Voice System" choice from the system control menu to restart the voice system.`

   `The Voice System has stopped.`

   `Press Enter to continue.`

4. Press ENTER.

   The system displays the System Control menu (Figure 3-6).

Using the Command Line

To stop the voice system, do the following:

NOTE:
Have the system administrator route calls away from the system before beginning this procedure.

1. Enter **stop_vs *time***

   where *time* is the time (60 to 600 seconds) that you want the system to wait before it begins the shut down procedure. The default wait time is 180 seconds.

   The system displays the following message:

   `The Voice System is now stopping.`

   `Initiating request to clear all calls in the next` *X* `seconds.`

   `Orderly idling of the system succeeded.`

   `After the voice system has completely stopped, use the "Start Voice System" choice from the system control menu to restart the voice system.`

Shutting Down the Voice System

To shut down the voice system, do the following:

1. Starting at the Voice System Administration menu (Figure 3-5), select

   ```
   > Configuration Management
       > System Control
           > Shutdown System
   ```

   The system displays the Wait Time window (Figure 3-7).

2. Enter a number between 0 and 60.

   This is the number of seconds you want the system to wait for all calls to clear before shutting down the voice system.

3. Press F3 (save).

   The system displays the following messages:

   `The Voice System is now stopping.`

   `Initiating request to clear all calls in the next` *X* `seconds.`

   `Orderly idling of the system succeeded.`

   `After the voice system has completely stopped, use the "Start Voice System" choice from the system control menu to restart the voice system.`

Administering the Operating System

Administering the operating system includes:

- Shutting down the operating system
- Rebooting the operating system

Shutting Down the Operating System

You can shut down the operating system:

- Using the INTUITY CONVERSANT windows
- Using the command line

NOTE:
The system automatically resets the machine clock for daylight savings time. If your system is down at the time at that daylight savings time is updated (April and October), your machine clock will not indicate the correct time.

Using the INTUITY CONVERSANT Windows

1. Stop the voice system. See "Stopping the Voice System," above.
2. Start at the INTUITY CONVERSANT system menu (Figure 3-8).

```
Intuity CONVERSANT VIS (Wichita)

UNIX System Administration
Voice System Administration
Exit
```

Figure 3-8. INTUITY CONVERSANT system Menu

3. Select

```
> UNIX System Administration
    > Machine
        > shutdown
```

The system displays the Shut Down the Machine window (Figure 3-9).

```
3                    Shut Down the Machine

Users currently logged on:

root        console       Jul  8 06:39
root        pts000        Jul  8 08:48
```

Figure 3-9. Shut Down the Machine Window

4. Press F3 (Continue).

   The system displays the next Shut Down the Machine window (Figure 3-10).

```
4                          Shut Down the Machine

  Number of seconds before shutdown starts:        60

  WARNING: Once started, this procedure CANNOT BE STOPPED!
           Strike SAVE to proceed with shutdown and exit OA&M.
```

Figure 3-10. Shut Down the Machine Window (continued)

5. Enter the number of seconds the machine should wait to clear all calls before shutting down. Valid values are between 0 and 9999.
6. Press F3 (Save).

   If you selected "0," the shutdown starts immediately. In this case, all remote users (if any) are notified that a shutdown is starting immediately.

Using the Command Line

To shut down the operating system using the command line, do the following:

1. Stop the voice system. See "Stopping the Voice System" above.
2. Enter **shutdown -i0 -y -g0**

Rebooting the UNIX System

To reboot the UNIX system, do the following:

1. Stop the voice system. See "Stopping the Voice System" above for the procedure.
2. Enter **shutdown i6 -y -g0**

Administering the Database System

Administering the database system consists of:

- Starting the database system
- Stopping the database system

Starting the Database System

To start the database system, do the following:

1. Enter **/oracle/bin/ior w**

   The system displays the following messages followed by the UNIX prompt.

   ```
   ORACLE instance started.
   Database mounted.
   Database opened.
   Total System Global Area877716 bytes
   Fixed Size  24908 bytes
   Variable Size410440 bytes
   Database Buffers409600 bytes
   Redo Buffers32768 bytes
   SQL*DBA complete.
   ```

   If the database start-up fails, the system may hang, forcing you to press (DEL), or the system may provide error information and return the system prompt. If the system returns error information, enter:

   /oracle/bin/oerr ora *error_num*

   where *error_num* is the ORACLE error number in the reason field of the error message.

   The output will contain a brief explanation of the error, the cause, and the action to take to correct it.

   NOTE:
   You can also refer to the *ORACLE Error Messages and Codes Manual* for the explanation. If the error is unique to the UNIX environment, you can also see the *ORACLE for UNIX Technical Reference Guide* for detailed information.

   Follow the actions suggested to correct the problem.

Stopping the Database System

To stop the database system, do the following:

1. If the voice system is still running, perform “Stopping the Voice System” above.
2. Enter **/oracle/bin/ior s**

   The system displays the following messages followed by the UNIX prompt.

   ```
   Database closed.
   Database dismounted.
   ```

```
ORACLE instance shut down.

SQL*DBA complete.
```

If the database shutdown was not successful, complete Steps a and b.

a. Press DEL.

   The system displays the following message:

   ```
   ORA-01013: user requested cancel of current
   operation SQL*DBA complete.
   ```

b. Enter **/oracle/bin/ior c**

   The system displays the following message:

   ```
   ORACLE instance shut down.
   SQL*DBA complete.
   ```

Dropping a Database Table

If the table resides in a remote system machine, perform the following procedure on that remote machine.

NOTE:
If the table resides in a non-system remote machine, contact the database administrator of the remote machine for assistance.

1. Enter **/oracle/bin/orastat** to verify that the database is running.

   The system displays either the number 1 or the number 0.

   If “1” is displayed, the database is not running. Perform “Starting the Database System” above.

   If “0” is displayed, the database is running. Continue with Step 2.

2. Enter **/oracle/bin/sqlplus sti/sti**

   This will invoke the ORACLE SQL*PLUS utility.

   The system displays the following message:

   ```
   SQL*Plus: Release 3.1.1.9.1>
   ```

3. Enter **drop table *<“tblname”>***

   where *<“tblname”>* is the name of the table to be dropped enclosed in double quotes.

   NOTE:
   The table name is case sensitive. It must also be enclosed in double quotes appearing exactly as it appears in the system message.

If the table is dropped successfully, the system displays the following message:

`Table dropped.`

If the `<reason>` field is `ORA: 00942 table or view does not exist`, continue with Step 4.

If the table cannot be dropped, complete Steps a through d.

a. Enter **quit**

   This will exit the SQL*PLUS utility.

b. Perform "Stopping the Database System," above.

c. Perform "Starting the Database System" above.

d. Repeat Step 3 of this procedure.

4. Enter **quit**

   This will exit the SQL*PLUS utility.

Recreating the System Traffic Tables

To recreate the system traffic tables, do the following:

NOTE:
All current system traffic data is lost after performing this procedure.

1. Stop the voice system. See "Stopping the Voice System" above for the procedure.
2. Enter **/oracle/bin/sqlplus \@ /oracle/dist/cdh.sql**

   This will drop and recreate all system traffic tables.
3. Start the voice system. See "Starting the Voice System" above for the procedure.

Getting Inside the Computer

4

Overview

This chapter describes:

- Proper electrostatic discharge protection procedures
- Power removal and restoration procedures
- Computer chassis access procedures

Purpose

The purpose of this chapter is to provide the correct procedures for accessing the internal components of the MAP/100P.

Protecting against Damage from Electrostatic Discharge

CAUTION:
*Read this section before unpacking the MAP/100P. You **must** observe proper grounding techniques to prevent the discharge of static electricity from your body into ESD-sensitive components.*

Circuit cards and packaging materials that contain ESD-sensitive components are usually marked with a yellow-and-black warning symbol (Figure 4-1).

Figure 4-1. ESD Warning Symbol

To avoid damaging ESD-sensitive components, follow these rules:

- Handle ESD-sensitive circuit cards only after attaching a wrist strap to the bare wrist. Attach the other end of the wrist strap to a ground that terminates at the system ground, such as any unpainted metallic chassis surface.
- Handle a circuit card by the faceplate or side edges only (Figure 4-2 and Figure 4-3).

CAUTION:
Ensure that your palm is not in contact with the non-component side of the board.

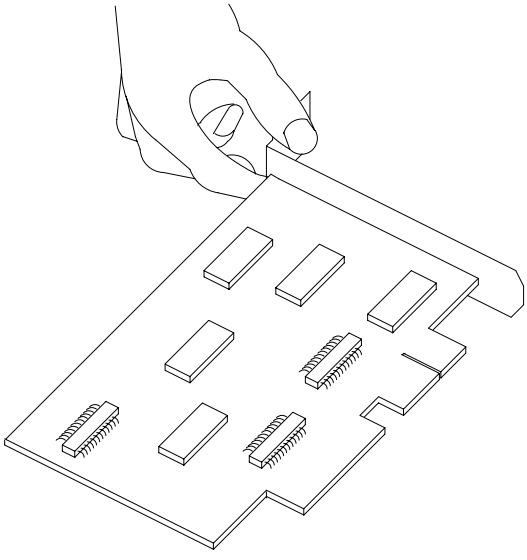

Figure 4-2. How to Hold a Small Circuit Card

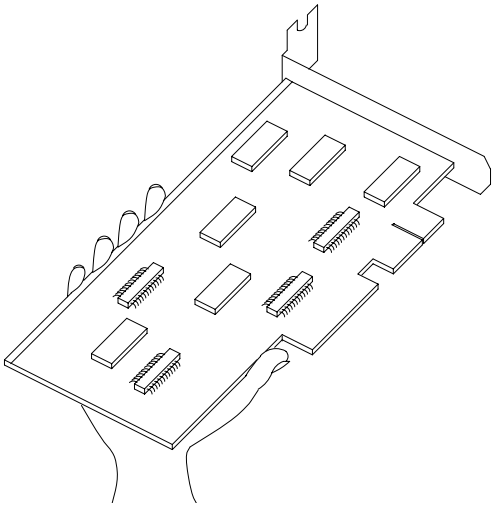

Figure 4-3. How to Hold a Large Circuit Card

- Keep circuit cards away from plastics and other synthetic materials such as polyester clothing.
- Do not hand circuit cards to another person unless that person is grounded at the same potential level.
- Hold devices such as a hard disk, floppy drive, or streaming tape in the same manner as a large circuit card. The ESD-sensitive area of these components is located on the bottom surface (Figure 4-4).

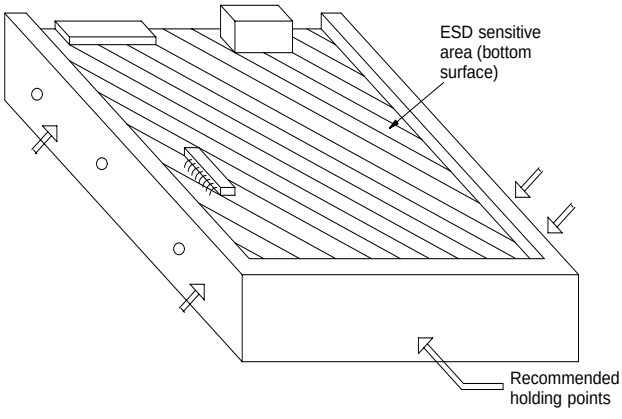

Figure 4-4. ESD-Sensitive Area of an Electronic Component

Removing Power from the MAP/100P

The MAP/100P requires a dedicated power line. The power cord connects to the rear of the MAP/100P at the point labeled AC power input receptacle (Figure 4-5). Before you begin any work in the MAP/100P you must disconnect the incoming power.

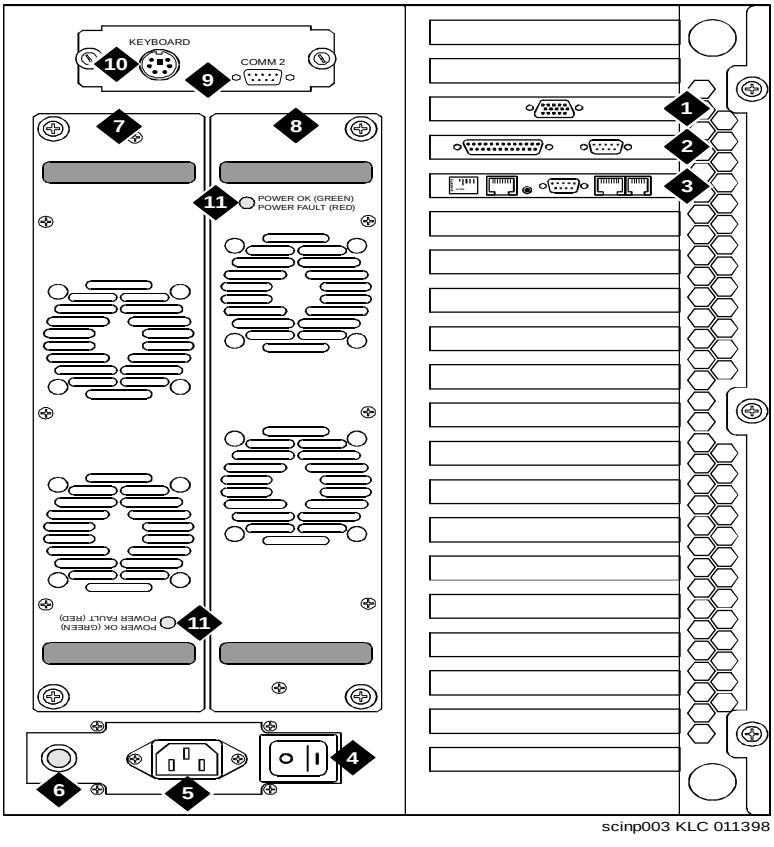

1. Video circuit card
2. P5 200 MHz CPU
3. Remote Maintenance card
4. ON/OFF power switch
5. AC power input
6. Fuse
7. Power Supply 1
8. Power Supply 2
9. COM2 port
10. Keyboard port
11. Power supply LEDs

Figure 4-5. MAP/100P Rear View

To remove power from the MAP/100P, do the following:

1. Shut down the voice system. See "Shutting Down the Voice System," in Chapter 3, "Common System Procedures".

2. Shut down the INTUITY CONVERSANT system. See "Shutting Down the Operating System," in Chapter 3, "Common System Procedures".
3. Turn off the monitor's power switch.

   The green or amber lamp on the front bottom of the monitor should be off.
4. Turn off the power switch on the lower back of the MAP/100P (Figure 4-5).
5. Unplug the MAP/100P from the power outlet.
6. Remove the MAP/100P power cord from the AC power input receptacle on the rear of the MAP/100P (Figure 4-5).

   NOTE:
   The power cord is anchored to the cable bracket with a cable tie. Do not cut the cable tie.

Accessing the Circuit Card Cage

A dress cover provides protection for the internal components of the MAP/100P. You must remove the side dress cover to access the circuit card cage.

DANGER:
Shut power off before removing the dress cover. See "Removing Power from the MAP/100P" for the procedure.

To remove the side dress cover, do the following:

1. Loosen the three thumb screws in the back of the unit (Figure 4-6).

   NOTE:
   These are captive screws.

2. Slide the dress cover toward the back of the MAP/100P.

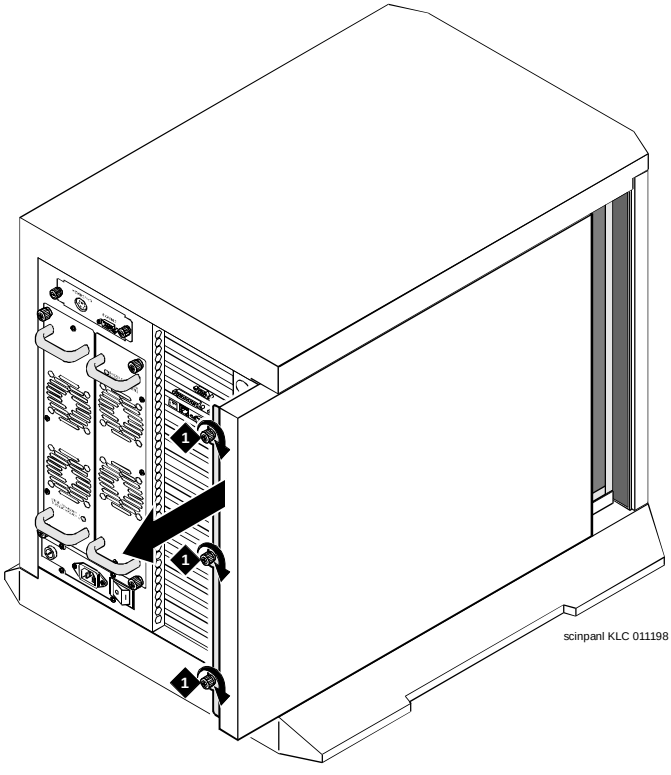

1. Retaining thumb screw

Figure 4-6. Accessing the Circuit Card Cage

Replacing the Dress Cover

To replace the side dress cover, do the following:

1. Align the dress cover with the MAP/100P chassis bottom.
2. Slide the dress cover back until it locks into place.

   NOTE:
   Make sure the tab on the front of the dress cover slides under the lip of the chassis.

3. Tighten the thumb screws on the back of the MAP/100P.

Restoring Power to the MAP/100P

To restore power to the MAP/100P, do the following:

1. Place the MAP/100P power cord in the AC input receptacle on the rear of the unit (Figure 4-5).

   NOTE:
   The power cord must be anchored to the cable bracket with a cable tied to relieve strain and reduce risk of power outage.

2. Plug the MAP/100P power cord into the designated power outlet.
3. Turn on the circuit breaker on the back of the MAP/100P (Figure 4-5).
4. Turn on the power switch on the lower back of the MAP/100P (Figure 4-5).
5. Turn on the monitor's power switch.

   The green or amber lamp on the front bottom of the monitor should be lit.

Replacing, Installing, or Upgrading Circuit Cards

5

Overview

This chapter describes:

- Configuring circuit cards in the MAP/100P
- Types of circuit cards
- General steps for circuit card installation
- Specific procedures for installation of standard and optional MAP/100P circuit cards
- Settings for resource options

Purpose

The purpose of this chapter is to ensure that:

- Circuit cards are installed correctly
- Resource options are set correctly

General Procedures

The general procedures include:

- Removing a circuit card
- Installing a circuit card

Removing a Circuit Card

WARNING:
Observe proper electrostatic discharge precautions when you handle computer components. Wear an antistatic wrist strap that touches your bare skin and connect the strap cable to an earth ground. See "Protecting against Damage from Electrostatic Discharge", in Chapter 4, "Getting Inside the Computer," for detailed electrostatic discharge precautions.

To remove a circuit card, do the following.

1. Verify that the replacement equipment is on site and appears to be in usable condition, with no obvious shipping damage.

   NOTE:
   If the circuit card being replaced is defective, note all symptoms of failure and include this information with the circuit card when it is returned.

2. If the system is in service, perform the following steps.
   a. Stop the voice system. See "Stopping the Voice System," in Chapter 3, "Common System Procedures".
   b. Shut down the voice system. See "Shutting Down the Voice System," in Chapter 3, "Common System Procedures".
   c. Shut down the INTUITY CONVERSANT system. See "Shutting Down the Operating System," in Chapter 3, "Common System Procedures".
3. Remove power from the MAP/100P. See "Removing Power from the MAP/100P" in Chapter 4, "Getting Inside the Computer," for power removal procedures.
4. Remove the dress cover. See "Accessing the Circuit Card Cage" in Chapter 4, "Getting Inside the Computer," for component removal procedures.
5. Locate the card to be replaced within the card cage. Disconnect any attached cables. Note the connectivity of each cable.
6. If there are ribbon cables attached to other cards which would impede the removal of the card, disconnect them and place them to the side. Note the connectivity of each cable.
7. Remove the retaining screw from the circuit card faceplate and save it.

8. Remove the circuit card from the backplane slot by gently pulling at the top corners of the circuit card.

NOTE:
The backplane connector slots are labeled 1 through 20. Make sure to install the replacement card in the same backplane slot.

9. Remove the circuit card from the MAP/100P chassis.

CAUTION:
Hold the circuit card carefully by the edges and place it on a grounded mat. See "Protecting against Damage from Electrostatic Discharge" in Chapter 4, "Getting Inside the Computer," for detailed electrostatic discharge precautions.

Installing a Circuit Card

WARNING:
Observe proper electrostatic discharge precautions when you handle computer components. Wear an antistatic wrist strap that touches your bare skin and connect the strap cable to an earth ground. See "Protecting against Damage from Electrostatic Discharge" in Chapter 4, "Getting Inside the Computer," for detailed electrostatic discharge precautions.

To install a circuit card, do the following:

1. Remove the new circuit card from its ESD protective wrapping.

NOTE:
Keep the package and all ESD protective wrapping. If you must return a card for repair, re-use of the replacement unit packaging is necessary to meet the manufacturer's warranty.

2. Verify the circuit card switch and jumper settings. Ensure address switches and jumpers are set to match the old card.

NOTE:
See the specific instructions, listed later in this chapter, for each type of circuit card being installed then continue with Step 3.

3. Holding the circuit card by its upper corners, slide the card into the backplane connector slot position from which you removed the damaged card.
4. Apply even pressure to both corners of the circuit card until it is locked into the backplane.

5. Secure the circuit card faceplate into position by replacing the retaining screw.
6. Return all cables on the new card. Make sure these cables are attached to their proper terminations.
7. Return all cables removed from other cards. Make sure these cables are attached to their proper terminations.
8. Replace the side dress cover. See "Replacing the Dress Cover" in Chapter 4, "Getting Inside the Computer", for the procedure.
9. Apply power to the unit. See "Restoring Power to the MAP/100P", in Chapter 4, "Getting Inside the Computer," for instructions on restoring power.
10. Reboot the INTUITY CONVERSANT system. See "Rebooting the UNIX System," in Chapter 3, "Common System Procedures".

Settings for Optional Circuit Cards

WARNING:
Observe proper electrostatic discharge precautions when you handle computer components. Wear an antistatic wrist strap that touches your bare skin and connect the strap cable to an earth ground. See "Protecting against Damage from Electrostatic Discharge", in Chapter 4, "Getting Inside the Computer," for detailed electrostatic discharge precautions.

This section provides the following information on the optional feature circuit cards:

- Switch and jumper settings
- Other installation requirements that are specific to the particular circuit card you are installing

In general, circuit cards are not preset at the factory. You must set the switches and jumpers (resource options) *before* you install the cards. When you set the switches according to the instructions in this book, remember that OFF is equivalent to open and ON is equivalent to closed.

Tip/Ring Circuit Cards

The Tip/Ring circuit cards provide the channels which are used by the INTUITY CONVERSANT system. The MAP/100P accommodates eleven Tip/Ring circuit cards. The Tip/Ring circuit card can be any of the following types:

- IVP4 (AYC6B)
- IVP6 (AYC5B)
- IVP6-IU (AYC16)
- IVP6-IA (AYC26)
- IVP6-ID (AYC27)
- IVP6 (AYC28)
- IVC6 (AYC10)
- NGTR (AYC30)

The following section covers the resource option settings each type of T/R card. Many of the figures referenced illustrate settings for more than one type of T/R card.

IVP4 (AYC6) Circuit Card

The IVP4 (AYC6) circuit card (Figure 5-1) provides four channels. This circuit card contains jumpers which must be set before the circuit card can be installed in the MAP/100P (Figure 5-2). Figure shows the correct jumper setting.

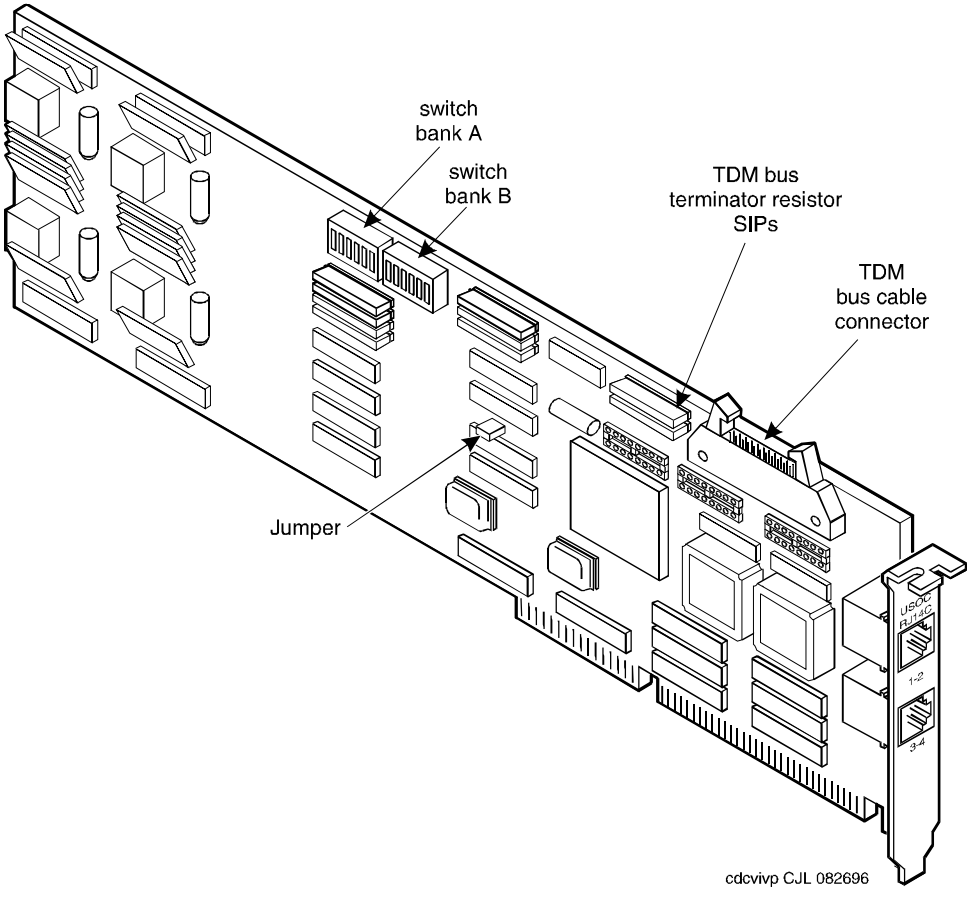

Figure 5-1. Location of Switch Banks A and B and Jumpers on the IVP4 (AYC6) Tip/Ring Circuit Card

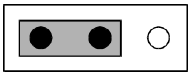

Figure 5-2. IVP4 (AYC6) Jumper Settings

The IVP4 (AYC6) circuit card contains two sets of switches that you must set before you install the circuit card in the MAP/100P (Figure 5-1).

The six switches on Switch Bank A adjust the termination impedance that each Tip/Ring interface presents to the network. This adjustment is sometimes necessary to ensure an adequate impedance match between the network and the telephone hybrid on the Tip/Ring card.

Switches one (1) through six (6) on Switch Bank A correspond to channels 0-5, respectively, on each Tip/Ring card. Figure 5-3 shows the correct setting for the IVP4 (AYC6B) circuit card.

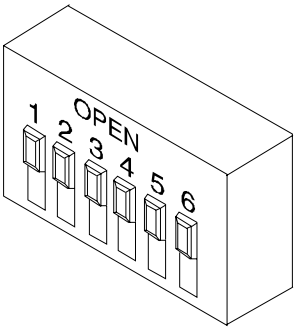

Figure 5-3. Setting for Switch Bank A on the IVP4 (AYC6) Tip/Ring Circuit Card

In general, you should leave all switches on Switch Bank A in the factory default “OPEN” position. If the system shows problems such as not recognizing touch tones, touch-tone simulation by outgoing speech (speech abruptly stops during playback), or unreliable detection of touch tones during playback (playback does not stop when a touch tone is entered), moving the switch that corresponds to the channel exhibiting the conditions to the “CLOSED” position may solve the problem.

Each Tip/Ring card in the system must have a unique address. To set these addresses, set Switch Bank B as shown in Figure 5-4, where “T/R 0” denotes the first Tip/Ring circuit card you are installing, “T/R 1” denotes the second card, and so on.

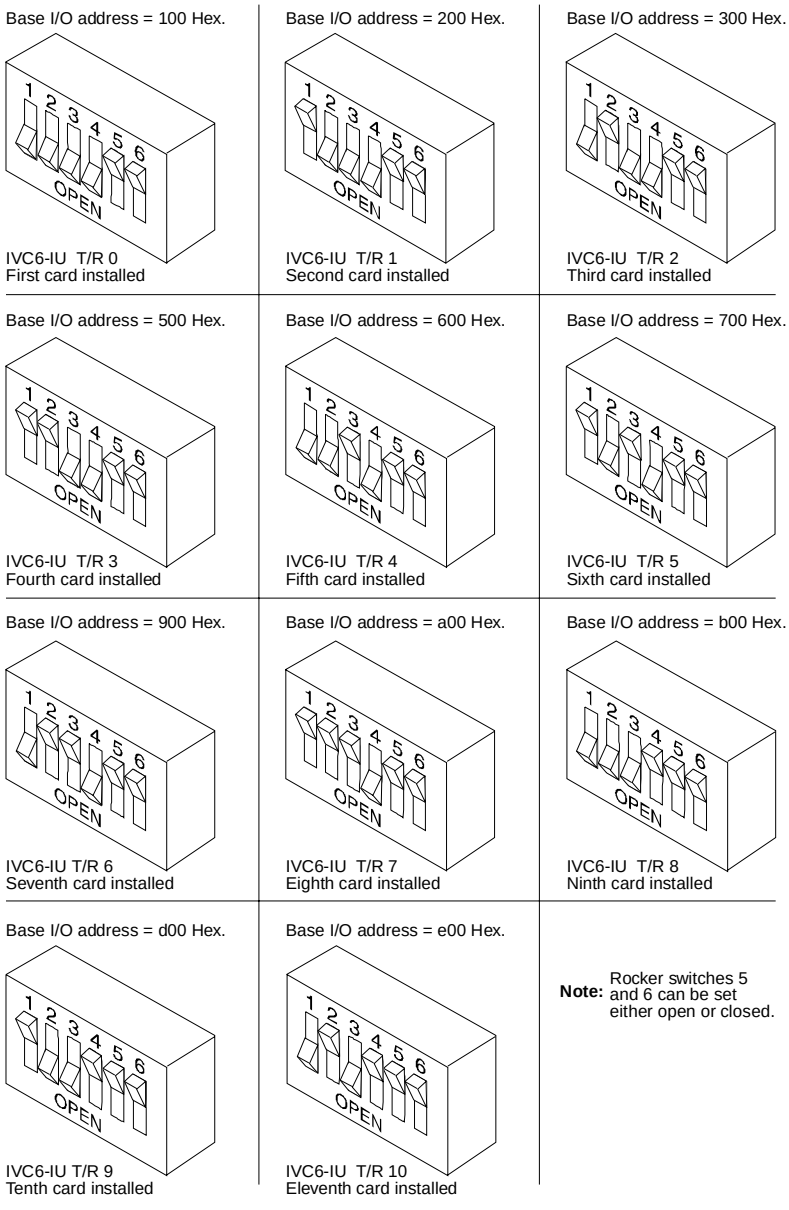

Figure 5-4. Settings for Switches on the IVP4 (AYC6), IVP6 (AYC5B), IVP6-IU (AYC16), IVP6-IA (AYC26), IVP6-ID (AYC27), IVP6 (AYC28), and IVC6 (AYC10) Tip/Ring Circuit Cards T/R-0 through T/R-7

IVP6 (AYC5B) Circuit Card

The IVP6 (AYC5B) circuit card (Figure 5-5) provides six channels. This circuit card contains switches that you must set before you install the circuit card in the MAP/100P.

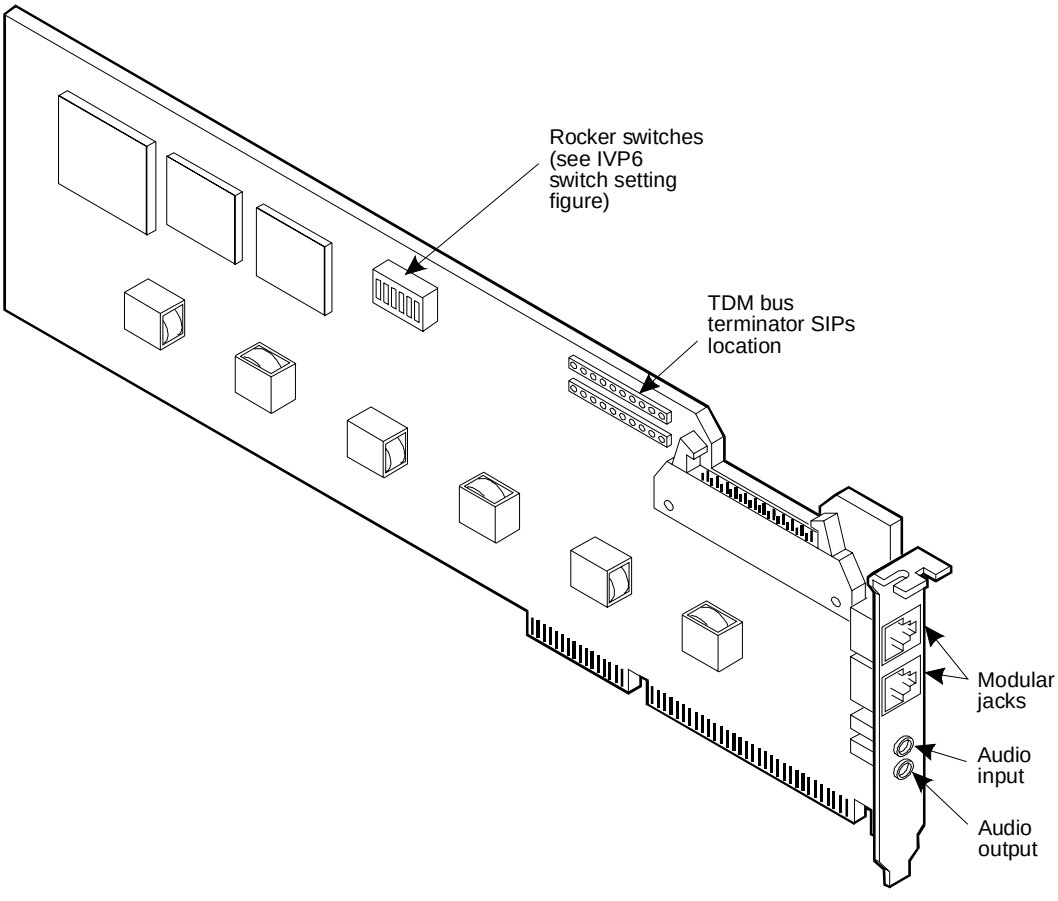

Figure 5-5. Layout of the IVP6 (AYC5B), IVP6-IU (AYC16), IVP6 (AYC26), IVP6 (AYC27), and IVP6 (AYC28) Tip/Ring Circuit Cards

Each Tip/Ring card in the system must have a unique address. To set these addresses, the switches must be configured properly. Figure 5-4 shows the switch settings for the IVP6 (AYC5B) circuit card.

IVP6-IU (AYC16) Circuit Card

The IVP6-IU (AYC16) circuit card (Figure 5-5) provides six channels. This circuit card contains switches that you must set before you install the circuit card in the MAP/100P.

Each Tip/Ring card in the system must have a unique address. To set these addresses, the switches must be configured properly. Figure 5-4 shows the switch settings for the IVP6-IU (AYC16) circuit card.

IVP6-IA (AYC26) Circuit Card

The IVP6-IA (AYC26) circuit card (Figure 5-5) provides six channels. This circuit card contains switches that you must set before you install the circuit card in the MAP/100P.

Each Tip/Ring card in the system must have a unique address. To set these addresses, the switches must be configured properly. Figure 5-4 shows the switch settings for the IVP6-IA (AYC26) circuit card.

IVP6-ID (AYC27) Circuit Card

The IVP6-ID (AYC27) circuit card (Figure 5-5) provides six channels. This circuit card contains switches that you must set before you install the circuit card in the MAP/100P.

Each Tip/Ring card in the system must have a unique address. To set these addresses, the switches must be configured properly. Figure 5-4 shows the switch settings for the IVP6-ID (AYC27) circuit card.

IVP6 (AYC28) Circuit Card

The IVP6 (AYC28) circuit card (Figure 5-5) provides six channels. This circuit card contains switches that you must set before you install the circuit card in the MAP/100P.

Each Tip/Ring card in the system must have a unique address. To set these addresses, the switches must be configured properly. Figure 5-4 shows the switch settings for the IVP6 (AYC28) circuit card.

IVC6 (AYC10) Circuit Card

The IVC6 (AYC10) circuit card (Figure 5-6) provides six channels. This circuit card contains switches that you must set before you install the circuit card in the MAP/100P.

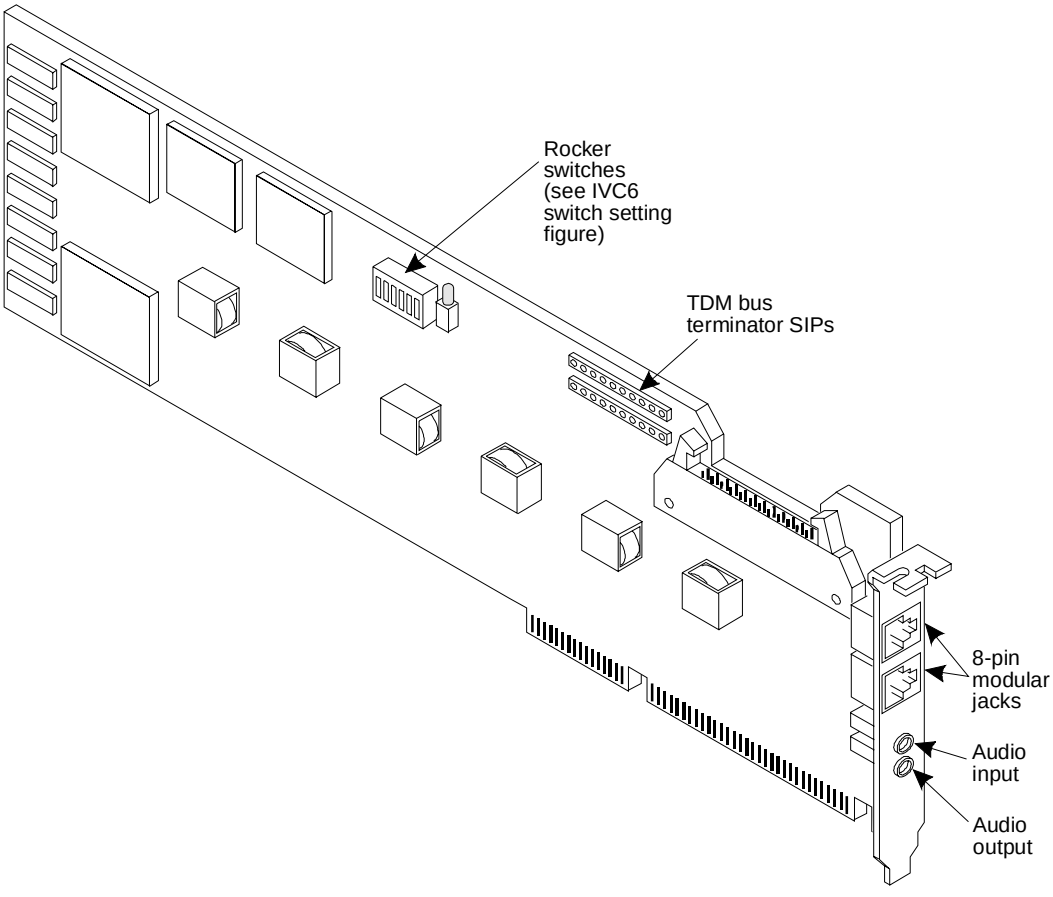

Figure 5-6. IVC6 (AYC10) Tip/Ring Circuit Card

Each Tip/Ring card in the system must have a unique address. To set these addresses, the switches must be configured properly. Figure 5-4 shows the switch settings for the IVC6 (AYC10) circuit card.

NGTR (AYC30) Circuit Card

The NGTR (AYC30) circuit card (Figure 5-7) provides six channels. This circuit card contains switches that you must set before you install the circuit card in the MAP/100P.

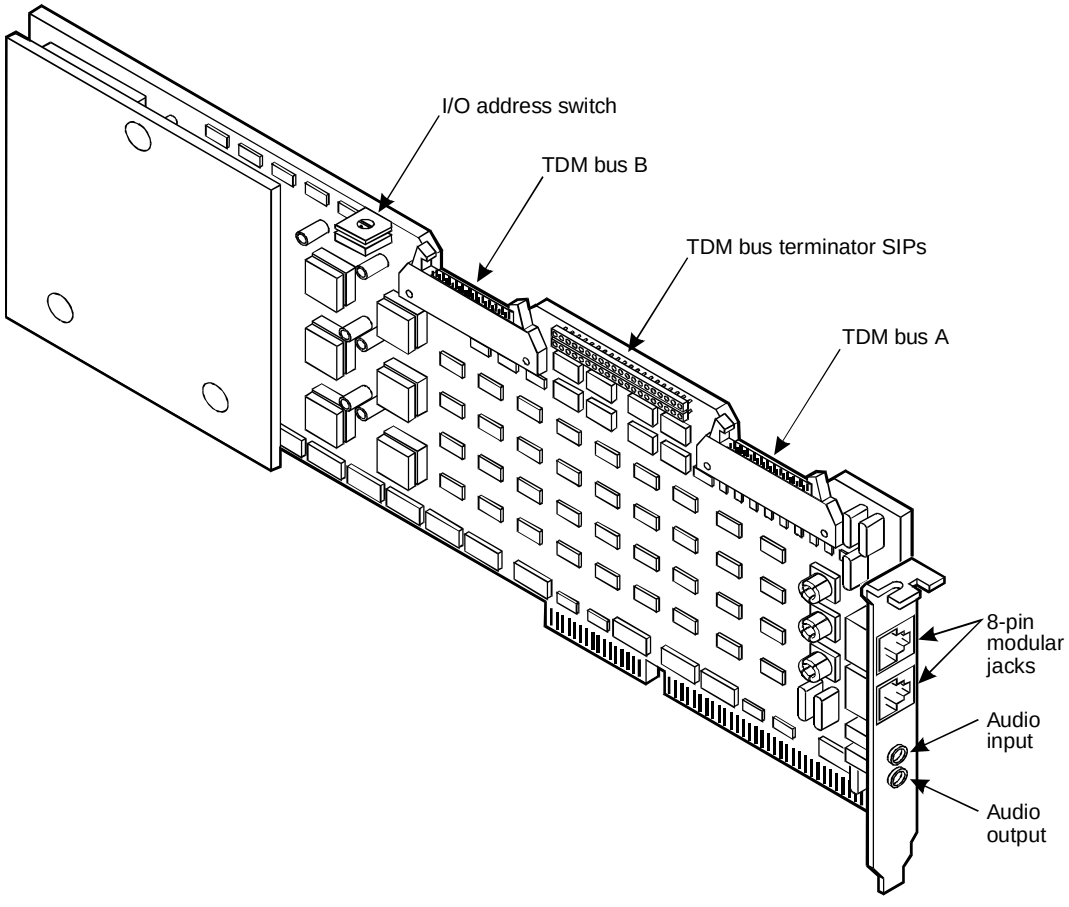

Figure 5-7. NGTR (AYC30)

Each Tip/Ring circuit card in the system must have a unique address. To set these addresses, the switch must be configured properly. Figure 5-8 shows the switch settings for the NGTR (AYC30) circuit card.

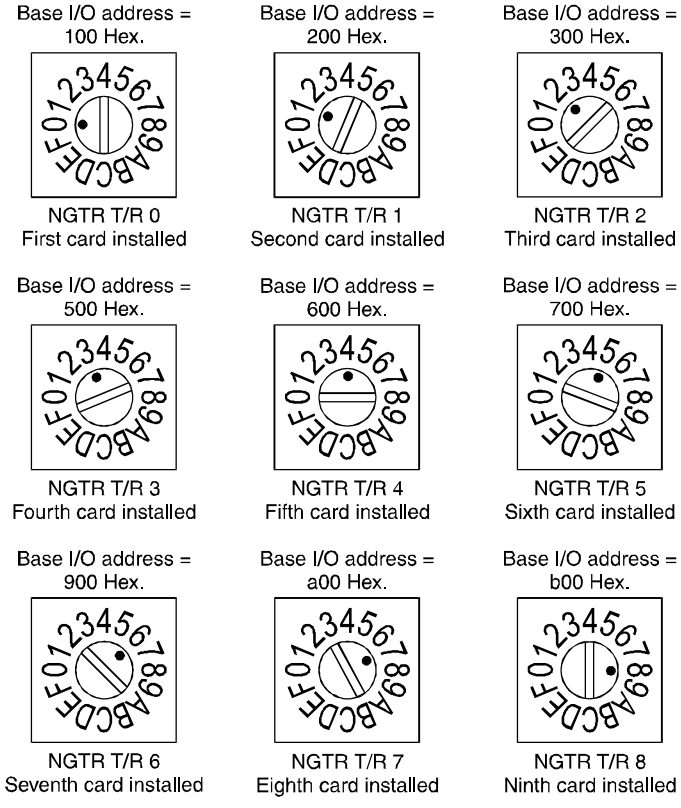

Figure 5-8. NGTR (AYC30) Tip/Ring Circuit Card Switch Settings

Installing the Tip/Ring Circuit Card Driver

NOTE:
If the Tip/Ring circuit cards are not recognized when the voice system is started or if other problems are noticed with the Tip/Ring circuit card driver, it may be necessary to remove and reinstall the Tip/Ring circuit card driver.

Occasionally dynamically loadable drivers fail to load into the UnixWare kernel properly.

To install the Tip/Ring circuit card driver, do the following:

1. Stop the voice system. See "Stopping the Voice System," in Chapter 3, "Common System Procedures".
2. Run the Hardware Resource Allocator to determine the configuration and placement of the Tip/Ring circuit cards to be installed. See "Adding Hardware to an Existing Configuration" in Appendix A, "System Configuration".

3. If you are not already logged in as **root**, do so now.
4. Enter **pkgadd -d diskette1**

   The system displays the following message:

   ```
   Insert diskette into Floppy Drive 1.
   Type [go] when ready,
       or [q] to quit:  (default:  go)
   ```

5. Insert the diskette labeled “Tip/Ring Board Driver 1 of 1” into the diskette drive. See “Inserting and Removing Diskettes,” in Chapter 3, “Common System Procedures”.
6. Press (ENTER).

   The system displays the following message:

   ```
   Installation in progress -- do not remove the diskette.
   ```

   ```
   The following packages are available:
     1. tipring    INTUITY Tip/Ring Board Driver
                   (i486)
   ```

   ```
   Select package(s) you wish to process (or ‘all’ to
   process all packages). (default: all) [?,??,q]:
   ```

7. Press (ENTER).

   The system displays the following message:

   ```
   PROCESSING:
   Set: INTUITY Tip/Ring Board Driver (tipring) from
   <diskette1>
   ```

   ```
   INTUITY Tip/Ring Board Driver
   (i486)
   Using </> as the package base directory.
   Lucent Technologies Inc.
   ```

   The system displays several status messages and then the following message:

   ```
   Please enter the IRQ:
   ```

8. Enter the IRQ provided by the Hardware Resource Allocator.

   The system displays several status messages and then the following message:

   ```
   Installation of INTUITY Tip/Ring Board Driver (tipring)
   was successful.
   ```

   ```
   Insert diskette into Floppy Drive 1.
   Type [go] when ready,
       or [q] to quit:  (default:  go)
   ```

9. Enter **q**
10. Remove the diskette labeled “Tip/Ring Board Driver 1 of 1” from the diskette drive. See “Inserting and Removing Diskettes,” in Chapter 3, “Common System Procedures”.

E1/T1 Circuit Card

The E1/T1 circuit card (Figure 5-9) contains switches and jumpers that you must set before you install the circuit card in the MAP/100P.

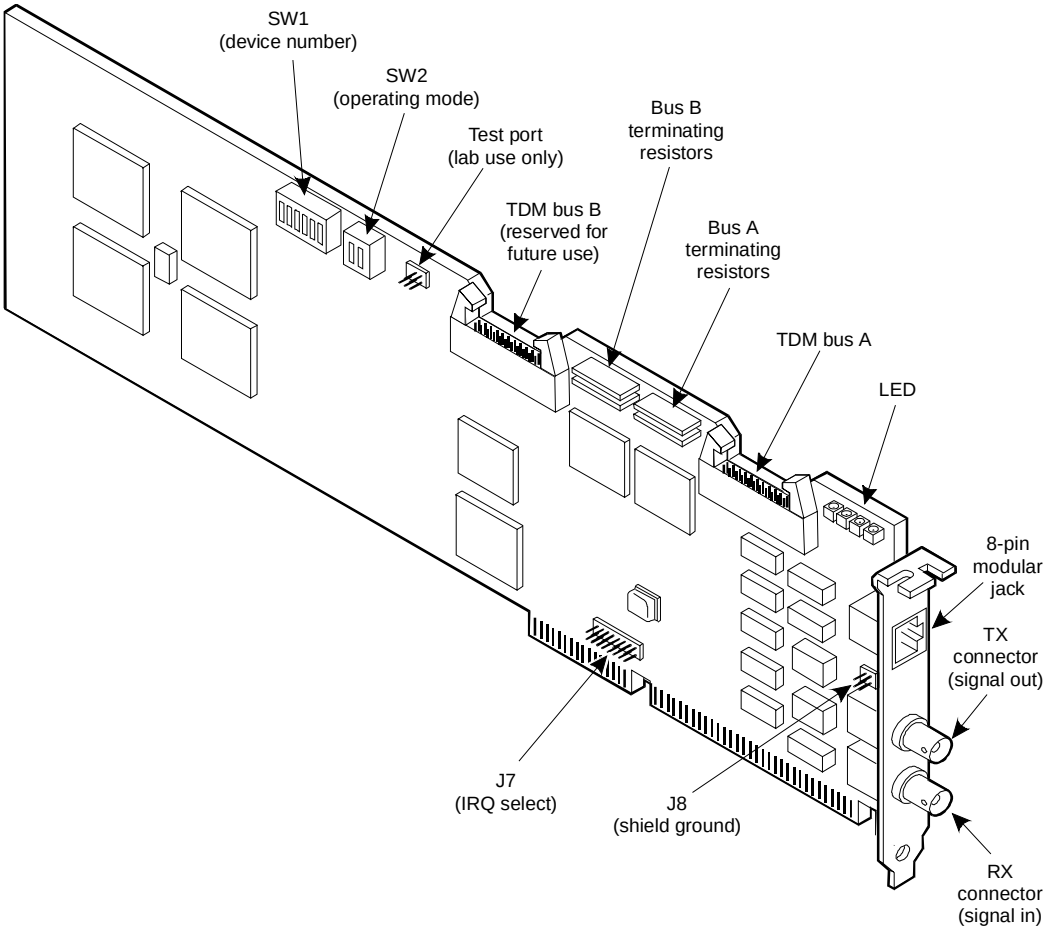

Figure 5-9. E1/T1 (AYC21) Circuit Card

Jumper Settings

Figure 5-10 shows the location and correct setting of the E1/T1 circuit card jumpers.

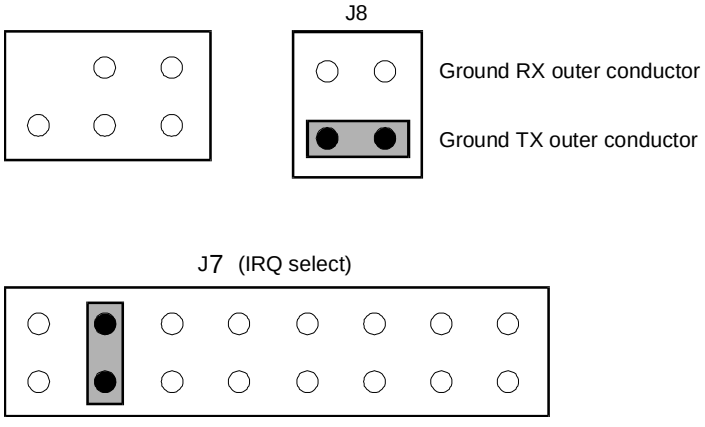

Figure 5-10. AYC21 Jumper Settings

Switch Settings

There are two sets of switches on the E1/T1 circuit card. Figure 5-11 through Figure 5-13 and show the correct switch settings.

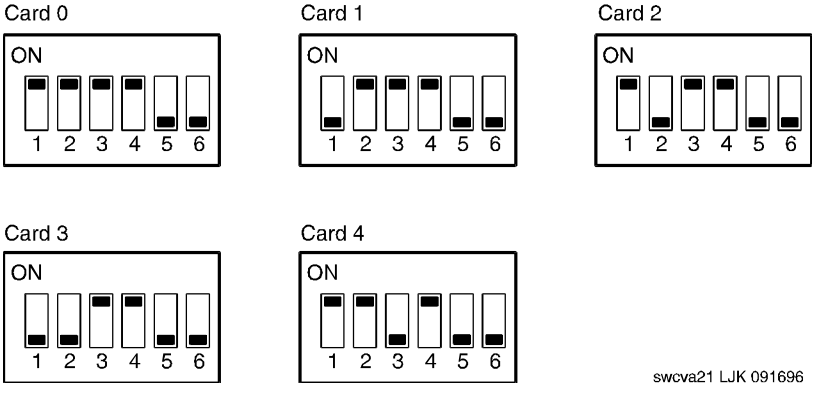

Figure 5-11. AYC21 Device Number Switch 1 Settings

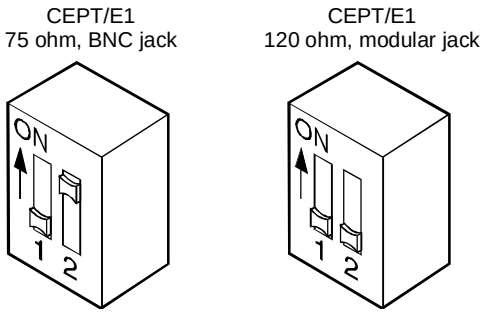

Figure 5-12. AYC21 Operating Mode Switch Settings for E1 Operation

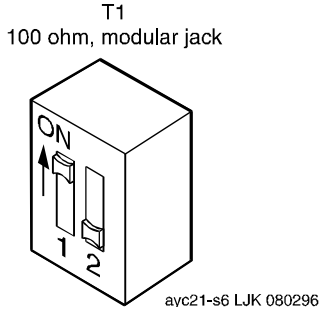

Figure 5-13. AYC21 Operating Mode Switch Settings for T1 Operation

Installing the E1/T1 Circuit Card Driver

NOTE:
If the E1/T1 circuit cards are not recognized when the voice system is started or if other problems are noticed with the E1/T1 circuit card driver, it may be necessary to remove and reinstall the E1/T1 circuit card driver.

Occasionally dynamically loadable drivers fail to load into the UnixWare kernel properly.

To install the E1/T1 circuit card driver, do the following:

1. If you are not already logged in as **root**, do so now.
2. Stop the voice system. See "Stopping the Voice System," in Chapter 3, "Common System Procedures".

3. Enter **pkgadd -d diskette1**

   The system displays the following message:

```
Insert diskette into Floppy Drive 1.
Type [go] when ready,
    or [q] to quit:  (default:  go)
```

4. Insert the diskette labeled “T1/E1 Board Driver 1 of 3” into the diskette drive. See “Inserting and Removing Diskettes,” in Chapter 3, “Common System Procedures”.

5. Press (ENTER).

   The system displays the following message:

```
Installation in progress -- do not remove the diskette.

The following packages are available:
  1. t1driver   INTUITY T1/E1 Board Driver
                (i486)

Select package(s) you wish to process (or ‘all’ to
process all packages). (default: all) [?,??,q]:
```

6. Press (ENTER).

   The system displays the following message:

```
PROCESSING:
Set: INTUITY T1/E1 Board Driver (t1driver) from
<diskette1>

INTUITY T1/E1 Board Driver
(i486)
Using </> as the package base directory.
Lucent Technologies Inc.
```

   The system displays several status messages and then the following message:

```
READY TO PROCESS:
    Package: INTUITY T1/E1 Board Driver (t1driver)
             diskette 2 of 3

Insert diskette 2 of 3 into Floppy Drive 1.
Type [go] when ready,
    or [q] to quit:  (default:  go)
```

7. Remove the diskette labeled “T1/E1 Board Driver 1 of 3” from the diskette drive. See “Inserting and Removing Diskettes,” in Chapter 3, “Common System Procedures”.

8. Insert the diskette labeled “T1/E1 Board Driver 2 of 3” into the diskette drive. See “Inserting and Removing Diskettes,” in Chapter 3, “Common System Procedures”.

9. Press (ENTER).

   The system displays several status messages and then the following message:

   ```
   READY TO PROCESS:
       Package: INTUITY T1/E1 Board Driver (t1driver)
                diskette 3 of 3

   Insert diskette 3 of 3 into Floppy Drive 1.
   Type [go] when ready,
       or [q] to quit:  (default:  go)
   ```

10. Remove the diskette labeled "T1/E1 Board Driver 2 of 3" from the diskette drive. See "Inserting and Removing Diskettes," in Chapter 3, "Common System Procedures".

11. Insert the diskette labeled "T1/E1 Board Driver 3 of 3" into the diskette drive. See "Inserting and Removing Diskettes," in Chapter 3, "Common System Procedures".

12. Press (ENTER).

    The system displays several status messages and then the following message:

    ```
    Installation of T1/E1 Board Driver (t1driver) was
    successful.

    Insert diskette into Floppy Drive 1.
    Type [go] when ready,
        or [q] to quit:  (default:  go)
    ```

13. Enter **q**

14. Remove the diskette labeled "T1/E1 Board Driver 3 of 3" from the diskette drive. See "Inserting and Removing Diskettes," in Chapter 3, "Common System Procedures".

T1 Circuit Cards

The INTUITY CONVERSANT system supports two types of T1 circuit cards:

- AYC3B
- AYC11

AYC3B Circuit Card

The AYC3B version of the T1 circuit card (Figure 5-14) contains switches and jumpers that you must set before you install the circuit card in the MAP/100P.

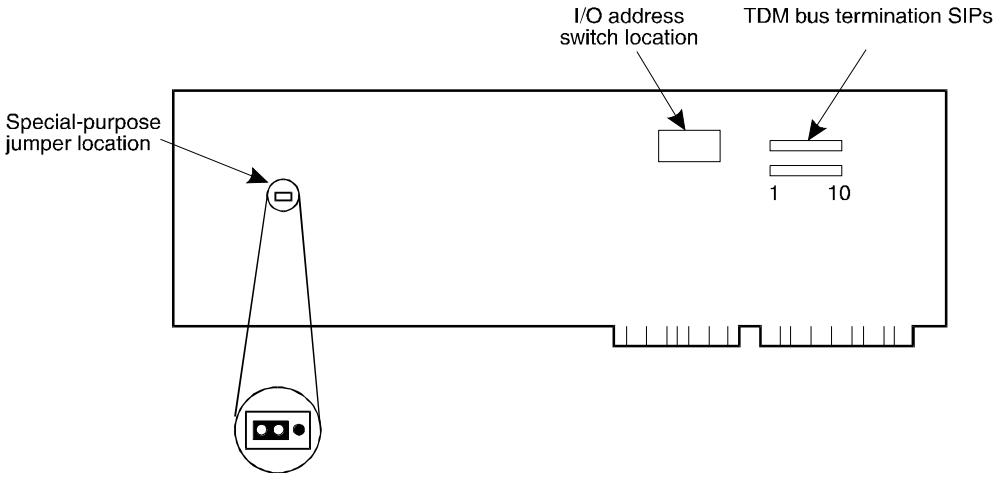

Figure 5-14. AYC3B T1 Circuit Card

Jumper Settings

Figure 5-14 shows the jumper setting for the AYC3B T1 circuit card.

Switch Settings

Figure 5-15 shows the switch settings for the AYC3B T1 circuit card.

CAUTION:

Do not use OS-Index 0 or OS-Index 1 if your system has the Token Ring driver installed.

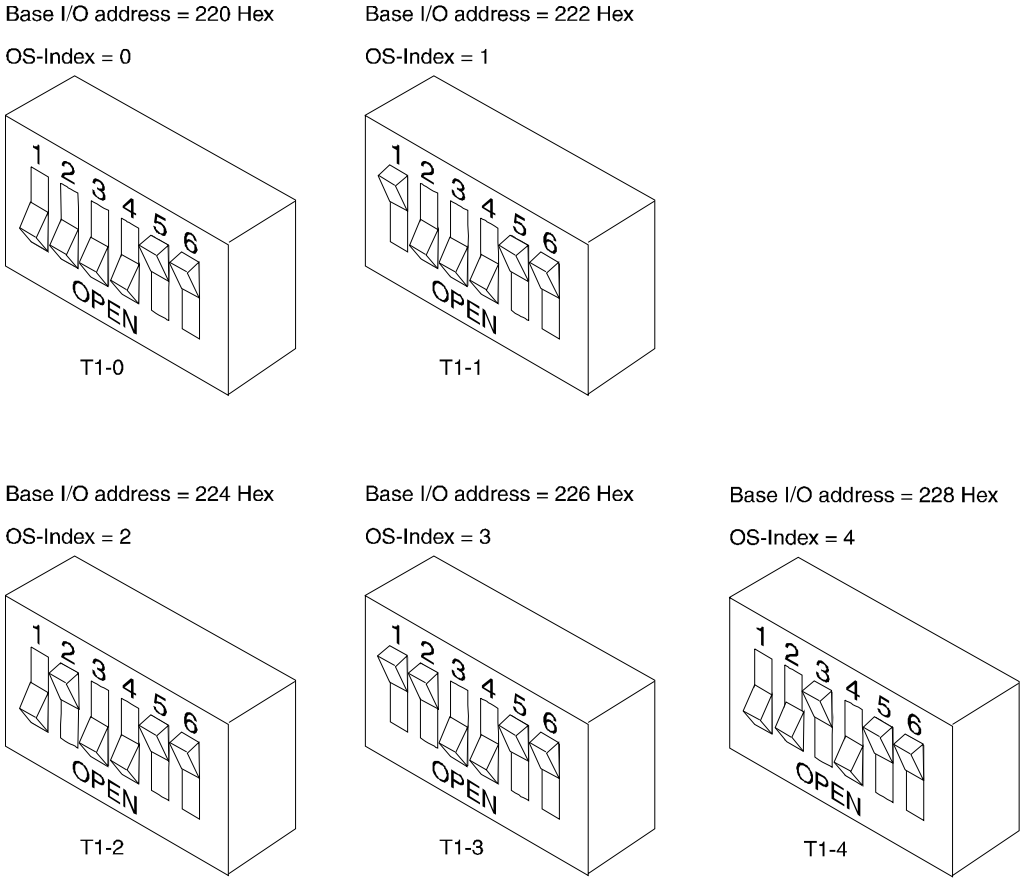

Figure 5-15. T1-0 through T1-4 Switch Settings for the AYC3B and AYC11 T1 Circuit Cards

AYC11 Circuit Card

The AYC11 version of the T1 circuit card (Figure 5-16) contains switches and jumpers that you must set before you install the circuit card in the MAP/100P.

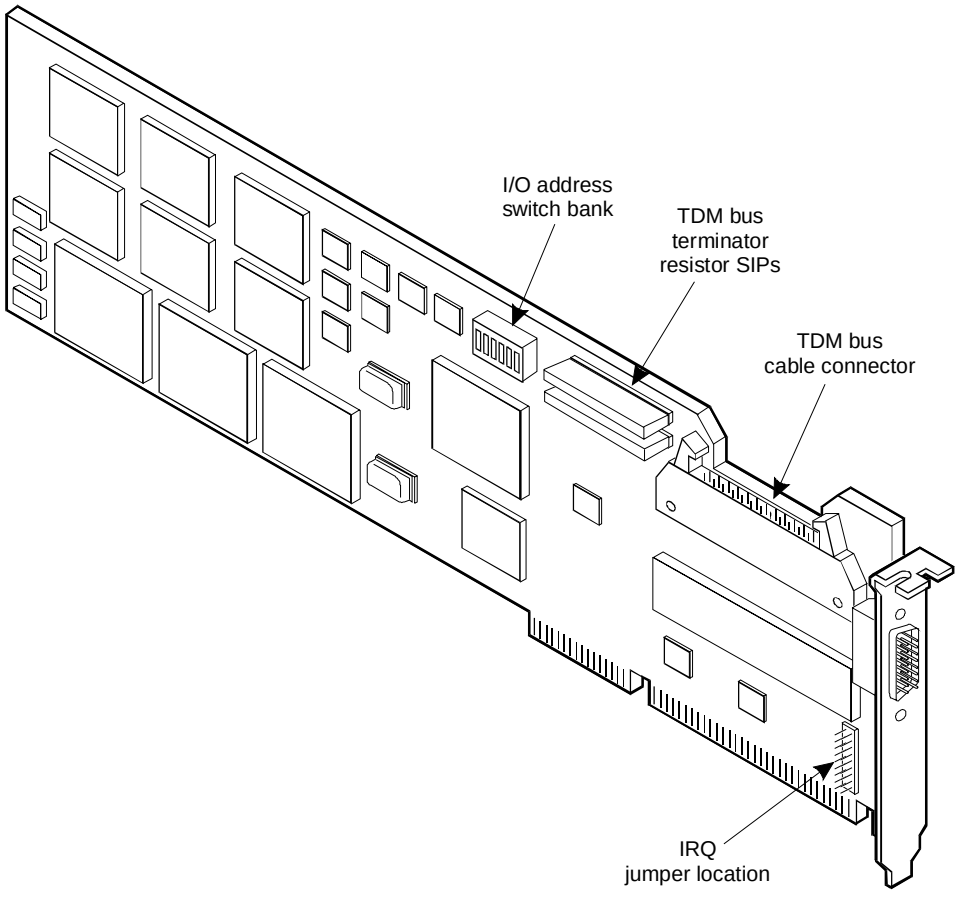

Figure 5-16. AYC11 T1 Circuit Card

Jumper Settings

Figure 5-17 shows the jumper settings for the AYC11 T1 circuit card.

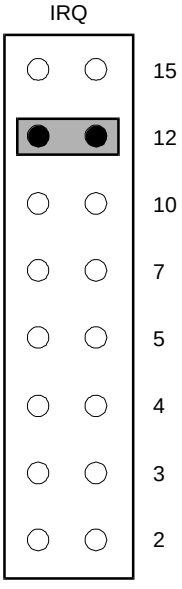

Figure 5-17. AYC11 Jumper Settings

Switch Settings

Figure 5-15 shows the switch settings for the AYC11 T1 circuit card.

Speech and Signal Processor (AYC43) Circuit Card

The SSP circuit card (Figure 5-18) contains switches and jumpers that you must set before you install the circuit card in the MAP/100P.

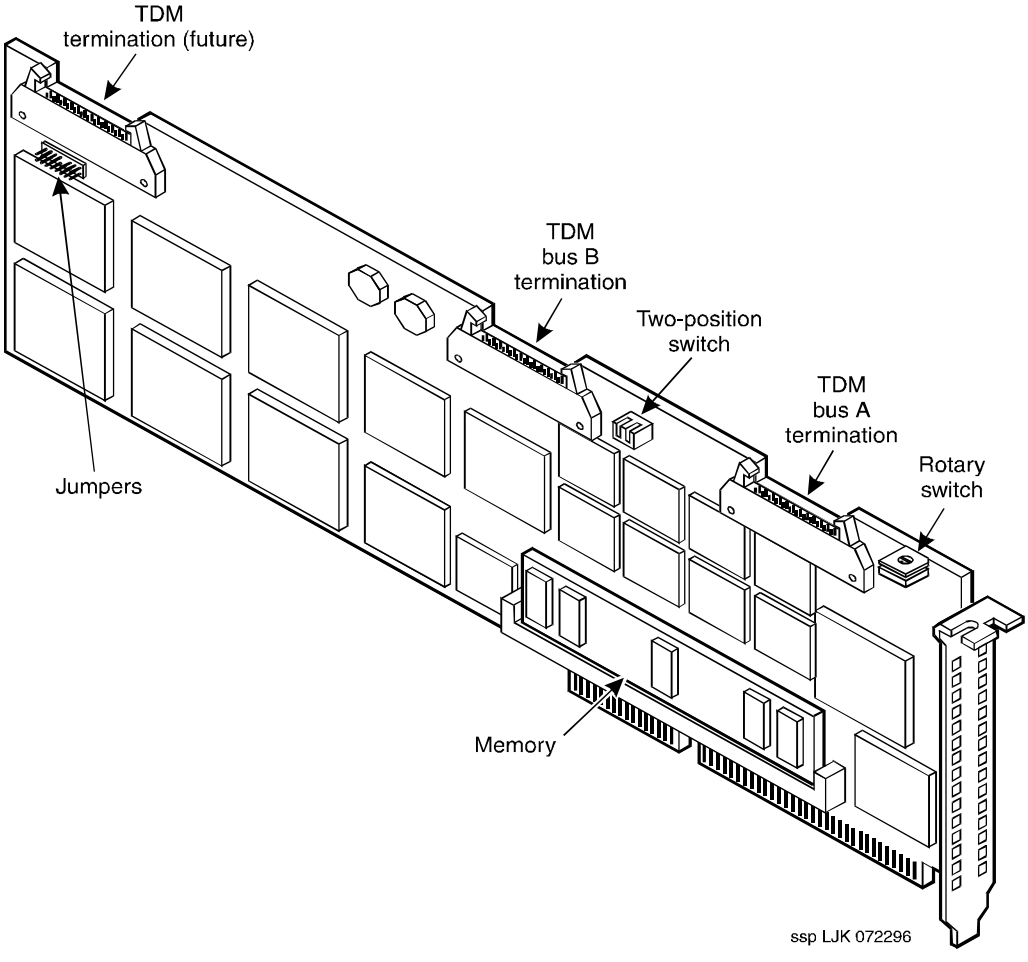

Figure 5-18. Speech and Signal Processor Circuit Card

Jumper Settings

Figure 5-18 shows the location of the SSP circuit card jumpers. There should be no jumpers installed on the SSP circuit card.

Switch Settings

There are two types of switches on the SSP circuit card:

- Two-position switches
- Rotary switch

Two-Position Switch Settings

Figure 5-19 shows the location of the SSP circuit card two-position switches. If the SSP circuit card is not located at the end of the TDM bus, both switches should be set to open. The switches should be set to closed if the SSP circuit card is located at the end of the bus.

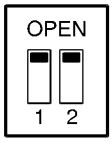

ssp-sw LJK 072296

Figure 5-19. SSP Circuit Card Two-Position Switches (Set for a Placement in the Middle of the TDM Bus)

Rotary Switch Settings

Figure 5-20 shows the rotary switch. It is set at zero for the first SSP circuit card installed in the MAP/100P.

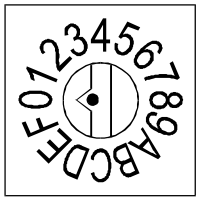

Figure 5-20. SSP Circuit Card Rotary Switch

Table 5-1 shows the rotary switch settings for the subsequent SSP circuit cards installed.

Table 5-1. SSP Circuit Card Rotary Switch Setting

I/O Address	OS Index	Rotary Switch Setting
d20	8	0
d28	9	1
d30	10	2
d38	11	3
920	12	4
928	13	5
930	14	6
938	15	7

Memory

The SSP circuit card is equipped with 16 Mbytes of memory contained on a dual in-line memory module (DIMM). The DIMM is located in the lower portion of the SSP circuit card (Figure 5-18).

CAUTION:
The DIMM is not field serviceable.

Text-to-Speech (AYC9) Circuit Card

Figure 5-21 shows the TTS (AYC9) circuit card.

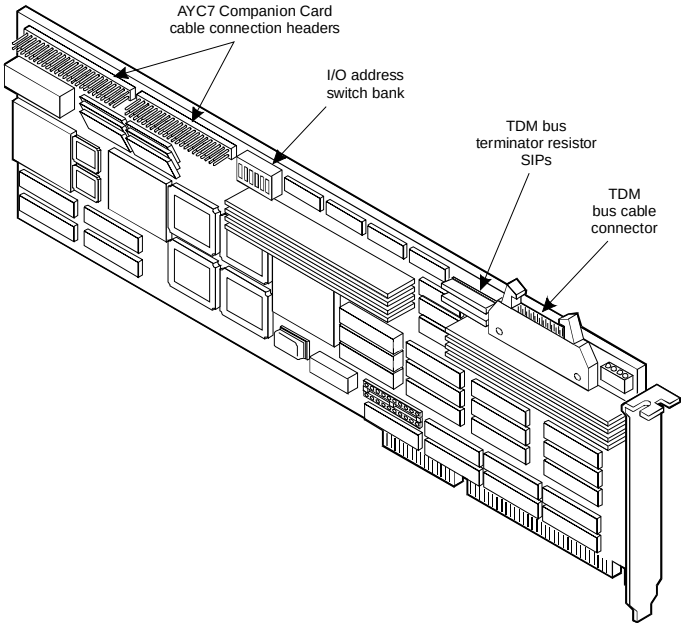

Figure 5-21. Text-to-Speech Circuit Card

Jumper Settings

There are no jumpers on the AYC9 TTS circuit card.

Switch Settings

You must set one bank of switches on the TTS circuit card. Set the switches as shown in Figure 5-22 for the correct I/O address switch settings for cards TTS-0 through TTS-7.

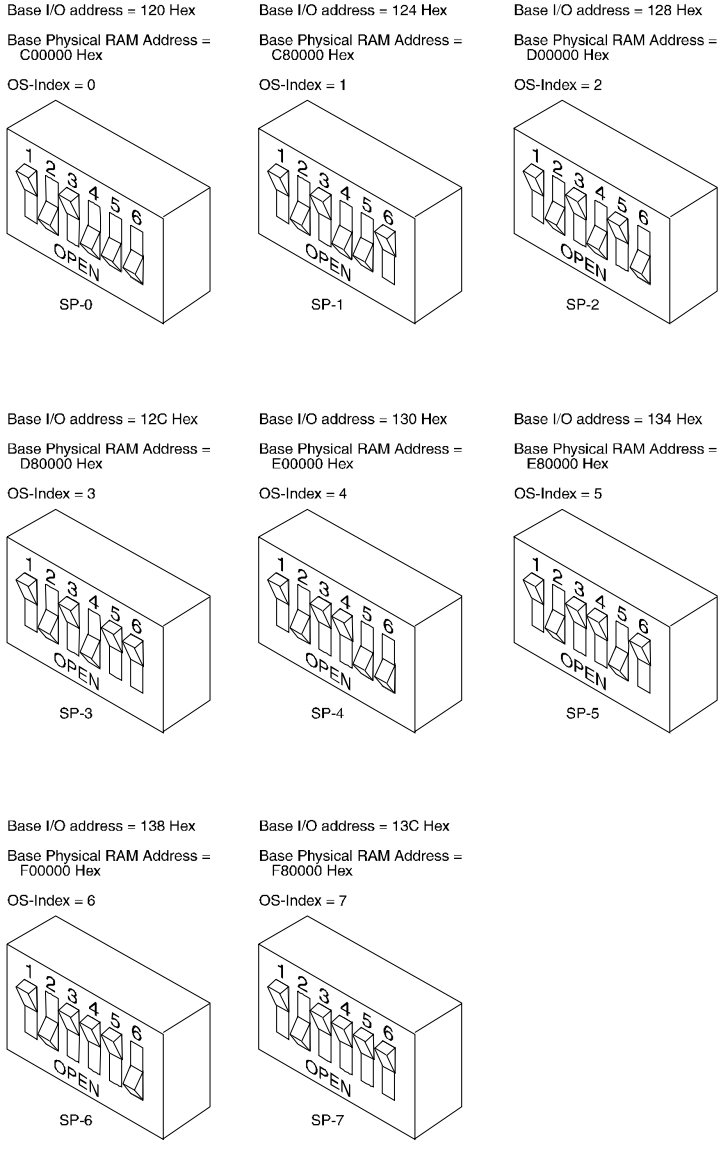

Figure 5-22. Text-to-Speech Circuit Card Switch Settings

Notice in Figure 5-22 that the switches are numbered one (1) through six (6). Switch 1 is a no-option switch. This means its setting is not important. The figure shows this switch as open, but it does not matter if it is open or closed. Switch 2 must be closed. Switch 3 must be open. Figure 5-22 also displays the OS index number for the corresponding switch settings. The INTUITY CONVERSANT system uses this index to identify each SP card.

Fax Circuit Cards

The INTUITY CONVERSANT system supports two versions of the fax circuit cards.

Version 1

The MAP/100P supports up to three Version 1 fax circuit cards (Figure 5-23).

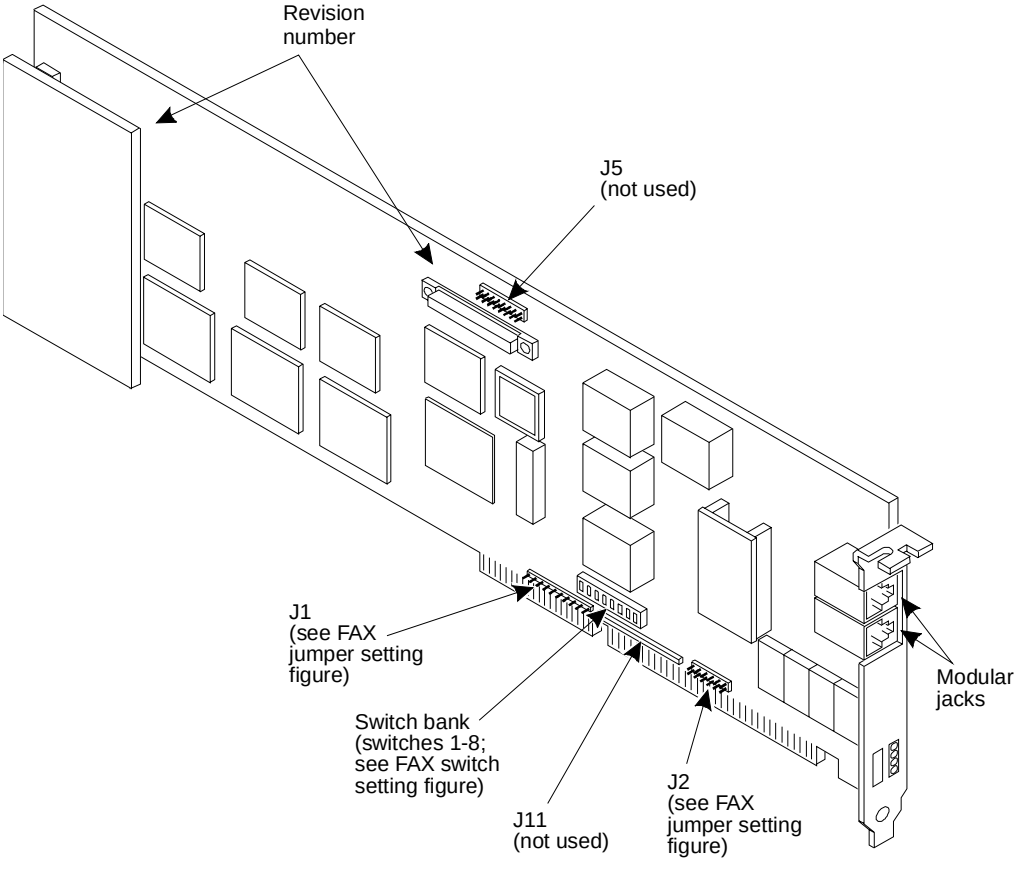

Figure 5-23. Fax Circuit Card - Version 1

Switches

There are multiple versions of the Fax circuit card — revision 5, revision 6, and higher. The revision number is indicated on the card at one of the two locations shown in Figure 5-23. Set the switches for all versions as shown in Figure 5-24 unless otherwise instructed for those cards beyond revision 6, and observe the following:

- For revision 5 cards, switch #1 does not affect the I/O address and must be OFF on *all* Fax circuit cards in the system. Switch #2 does not affect the base I/O address and must be ON *on one and only one* Fax circuit card.
- For revision 6 cards, switch #1 does not affect the base I/O address. It is used to pull up the TR114 interrupt line and must be ON *on one and only one* Fax circuit card in the system.

NOTE:
In Figure 5-24, the first switch bank indicates settings for the first card installed, the second switch bank for the second card installed, and the third switch bank for the third card installed.

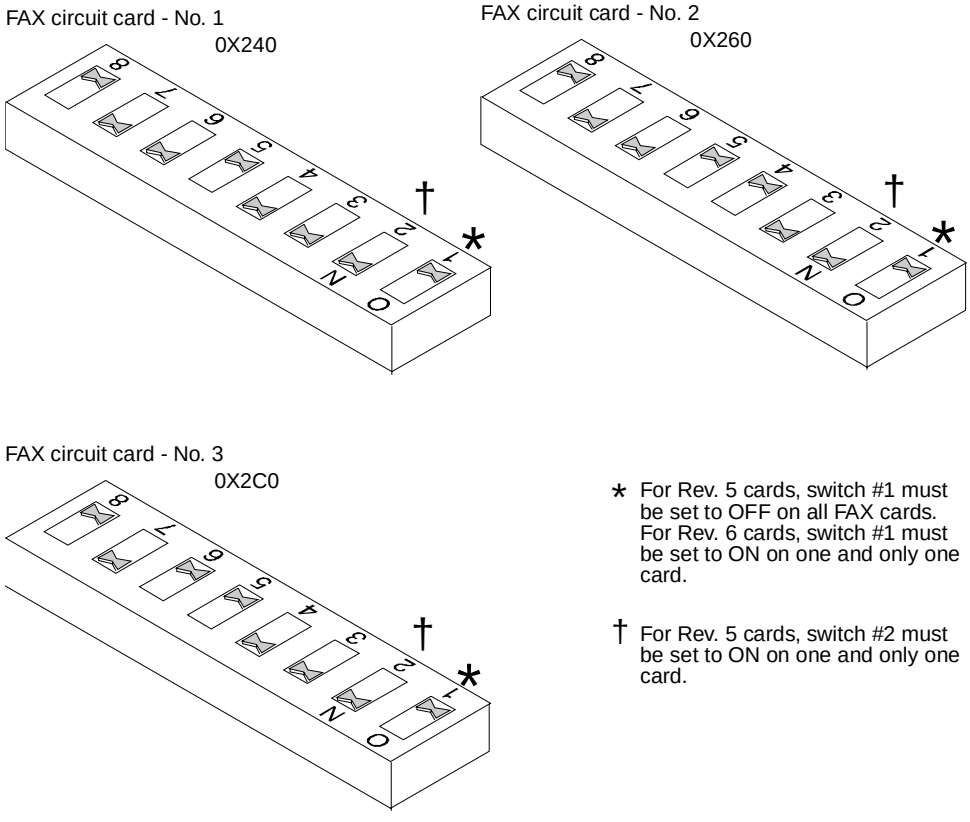

Figure 5-24. Fax Circuit Card - Version 1 Switch Settings

Jumper Settings

Jumpers on the Fax circuit card are in two locations: top center and bottom right (Figure 5-23). Neither J5 at the top center nor J11 in the middle of the bottom group is used.

Figure 5-25 shows diagrams of J1 and J2. Interrupt numbers are indicated beneath the jumper blocks. In this example, J1 is set to 15 and J2 is set to 4. You must set the jumpers according to the output of the Hardware Resource Allocator for the system you are installing. See “Hardware Resource Allocator Operation,” in Appendix A, “System Configuration”,” for more information.

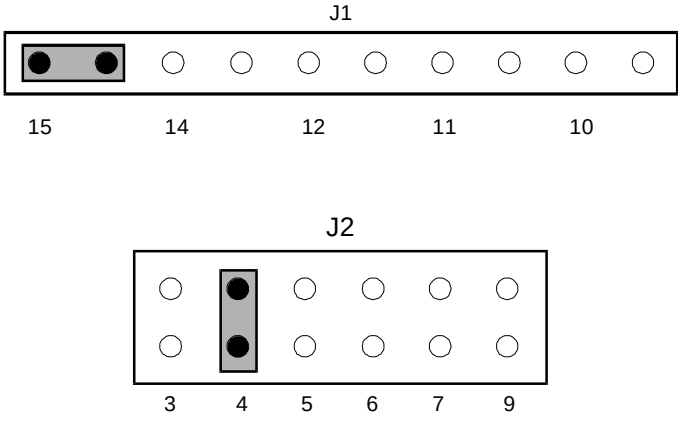

Set jumpers according to the output of the configuration program for your system. This example shows interrupts set to 15 (J1) and 4 (J2).

Figure 5-25. Sample Fax Circuit Card Jumper Settings and Interrupt Numbers

Version 2

The MAP/100P supports up to three Version 2 fax circuit cards. Figure 5-26 shows the version 2 of the fax circuit card.

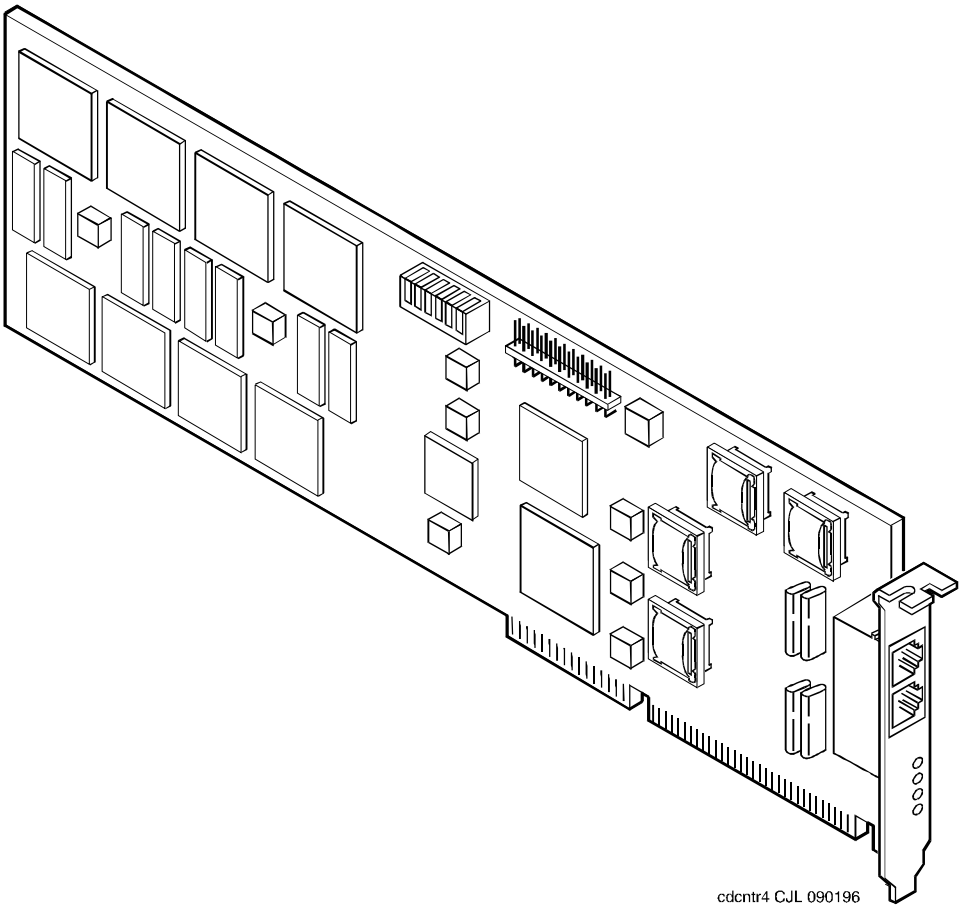

Figure 5-26. Fax Circuit Card - Version 2

Jumper Settings

Jumpers on the fax circuit card are located in the top center of the circuit card (Figure 5-26).

Figure 5-27 shows a diagram of the jumpers. Interrupt numbers are indicated above the jumper blocks. In this example, the jumper is set to 5. You must set the jumpers according to the output of the Hardware Resource Allocator for the system you are installing. See “Hardware Resource Allocator Operation,” in Appendix A, “System Configuration”,” for more information.

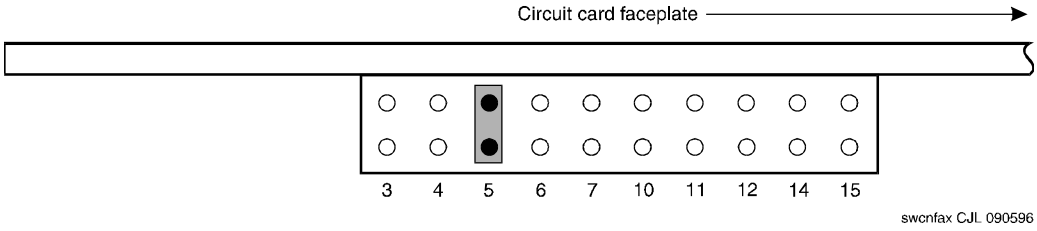

Figure 5-27. Sample Jumper Settings and Interrupt Numbers for the Fax Actions Circuit Card

Switch Settings

Set the switches as shown in Figure 5-28. Switch #1 does not affect the base I/O address. It is used to pull up the TR114 interrupt line and must be ON *on one and only one* fax attendant circuit card in the system.

NOTE:
In Figure 5-28, the first switch indicates settings for the first card installed, the second switch for the second card installed, and the third switch for the third card installed.

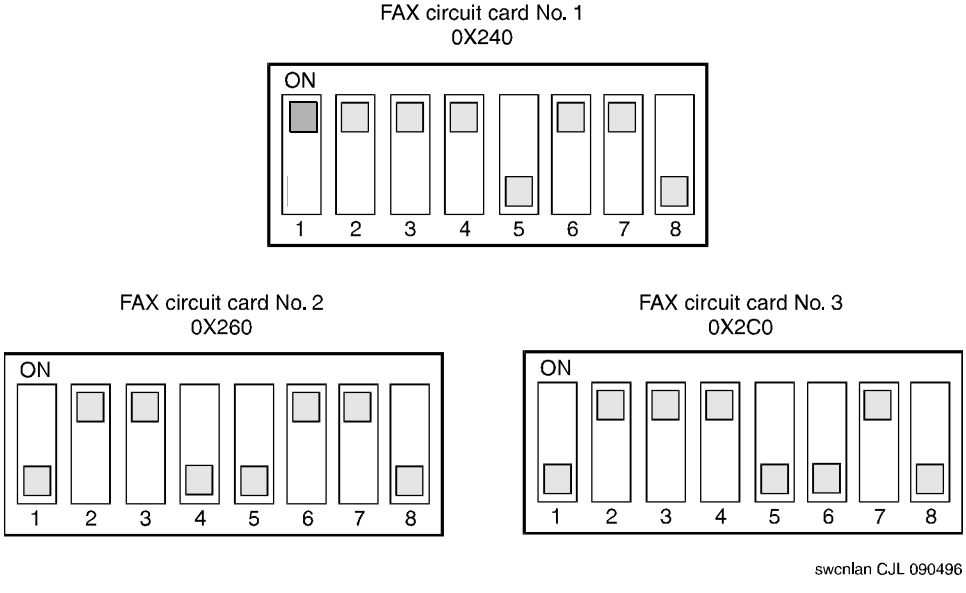

Figure 5-28. Switch Settings for the Fax Actions Circuit Card

Ethernet LAN Circuit Cards

The INTUITY CONVERSANT system supports two versions of the Ethernet LAN circuit card. Both versions allow you to connect the INTUITY CONVERSANT system to your local area network.

Version 1

Figure 5-29 shows Version 1 of the Ethernet LAN circuit card.

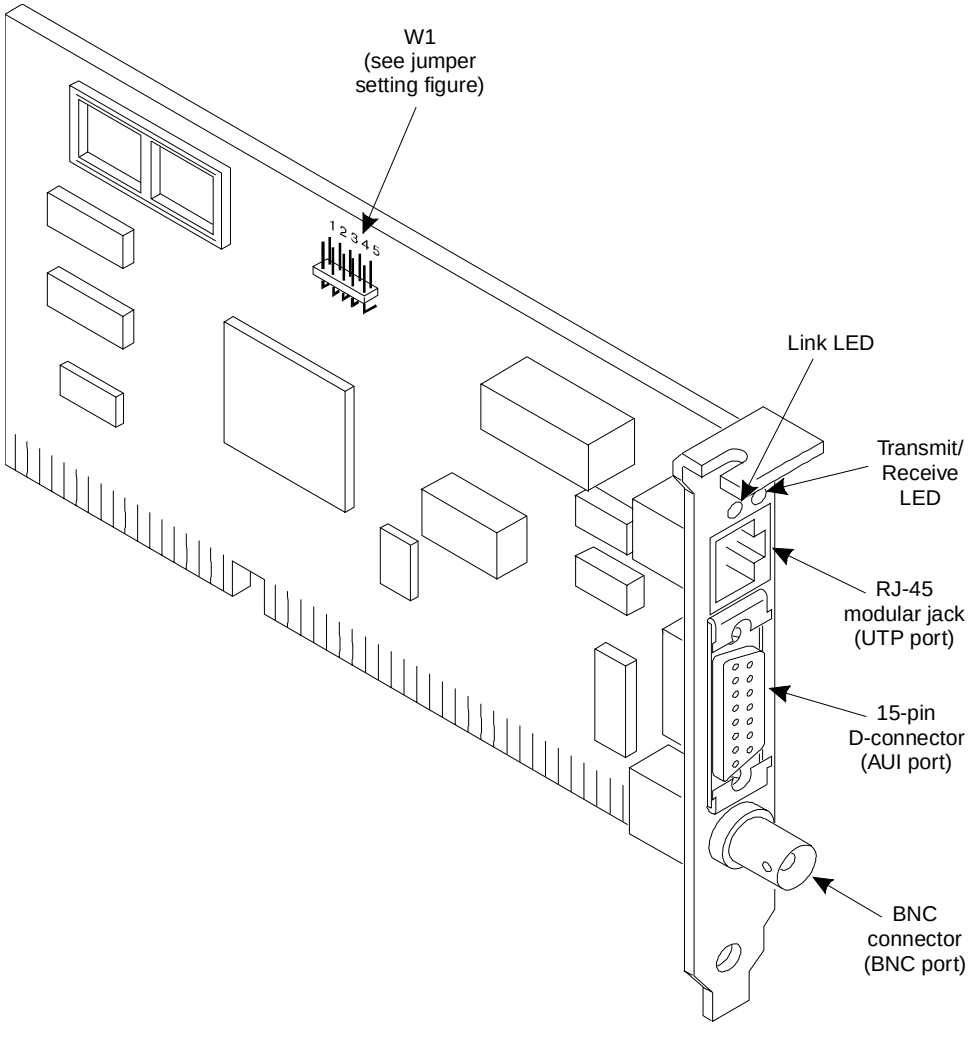

Figure 5-29. Ethernet LAN Circuit Card - Version 1

The default software configuration is as follows:

- IRQ - 10
- I/O base address - 280
- RAM base address - D8000

The default setting for the jumper on W1 is “1” (Figure 5-30). This position configures the card to be software programmable beginning at the default settings.

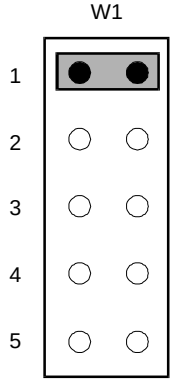

Figure 5-30. Ethernet LAN Circuit Card Software Programmable Jumper Setting

There are no switches to set on the Ethernet LAN circuit card.

Installing the Version 1 Hardware Driver

To install the LAN circuit card driver, do the following:

1. If you are not already logged in as **root**, do so now.
2. Stop the voice system. See “Stopping the Voice System” in Chapter 3, “Common System Procedures”.
3. Enter **pkgadd -d diskette1**

   The system displays the following message:

   ```
   Insert diskette into Floppy Drive 1.
   Type [go] when ready,
       or [q] to quit: (default:  go)
   ```

4. Insert the diskette labeled “SMC Ethernet STREAMS Device Driver 1 of 1” into the diskette drive. See “Inserting and Removing Diskettes” in Chapter 3, “Common System Procedures”.

5. Press (ENTER).

   The system displays the following message:

```
Installation in progress -- do not remove the diskette.

The following packages are available:
  1. sme42L     SMC Ethernet STREAMS Device Driver
                SVR4.2(Lachman TCP/IP)
                (i386) Release 2.12

Select package(s) you wish to process (or 'all' to
process all packages). (default: all) [?,??,q]:
```

6. Press (ENTER).

   The system displays the following message:

```
PROCESSING:
Set: SMC Ethernet STREAMS Device Driver SVR4.2(Lachman
TCP/IP (sme42L) from <diskette1>

SMC Ethernet STREAMS Device Driver SVR4.2(Lachman
TCP/IP)(i386)
Using </var/spool/pkg> as the package base directory.
Please provide installation parameters for each board
to be configured
Enter interrupt vector number (3-15):
```

7. Enter the appropriate vector number.

   The vector number is determined by the INTUITY CONVERSANT Hardware Resource Allocator. See "Hardware Resource Allocator Operation" in Appendix A, "System Configuration".

   The system displays the following message:

```
Enter IO Base address (200 - 3E0):
```

8. Enter the appropriate I/O base address.

   The I/O base address is determined by the INTUITY CONVERSANT Hardware Resource Allocator. See "Hardware Resource Allocator Operation" in Appendix A, "System Configuration".

   The system displays the following message:

```
Enter RAM Base address (80000 - FE000):
```

9. Enter the appropriate RAM base address.

   The RAM base address is determined by the INTUITY CONVERSANT Hardware Resource Allocator. See "Hardware Resource Allocator Operation" in Appendix A, "System Configuration".

   The system displays the following message:

```
Configure another board? (Y/N):
```

10. Enter **n**

    The system displays several status messages, then the following:

    ```
    Installation of SMC Ethernet STREAMS Device Driver
    SVR4.2(Lachman TCP/IP (sme42L) was successful.
    ```

    ```
    Insert diskette into Floppy Drive 1.
    Type [go] when ready,
        or [q] to quit:  (default:  go)
    ```

11. Enter **q**

12. Remove the diskette labeled “SMC Ethernet STREAMS Device Driver 1 of 1” from the diskette drive. See “Inserting and Removing Diskettes” in Chapter 3, ‘‘Common System Procedures’’.

Version 2

Figure 5-31 shows Version 2 of the Ethernet LAN circuit card.

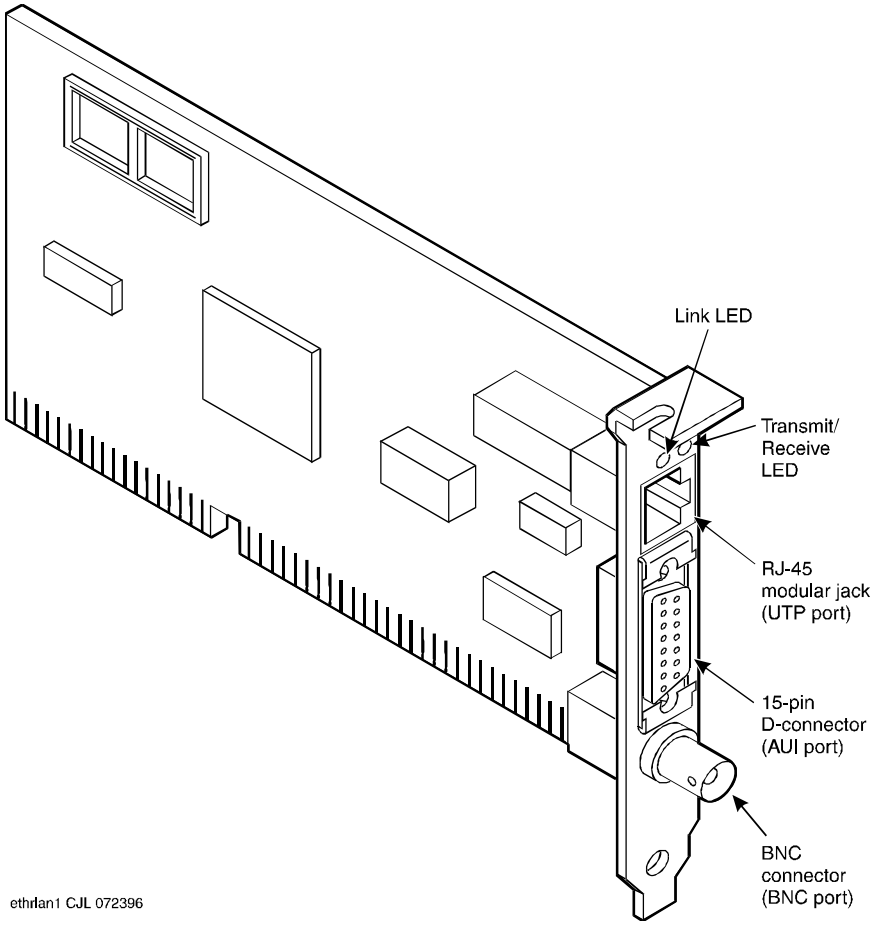

Figure 5-31. Ethernet LAN Circuit Card - Version 2

There are no jumpers or switches associated with Version 2 of the Ethernet LAN circuit card.

Installing a Version 2 LAN Circuit Card

Installation of a Version 2 LAN circuit card, in a system which did not previously have a LAN circuit card, involves:

- Installing the LAN circuit card driver
- Installing the LAN circuit card
- Initializing the LAN circuit card
- Verifying the LAN circuit card installation

Installing the Version 2 Hardware Driver

To install the LAN circuit card driver, do the following:

1. If you are not already logged in as **root**, do so now.
2. Stop the voice system. See "Stopping the Voice System" in Chapter 3, "Common System Procedures".
3. Enter **pkgadd -d diskette1**

   The system displays the following message:

   ```
   Insert diskette into Floppy Drive 1.
   Type [go] when ready,
       or [q] to quit:  (default:  go)
   ```

4. Insert the diskette labeled "SMC Ethernet Device Driver ISA Release 3.05 1 of 1" into the diskette drive. See "Inserting and Removing Diskettes" in Chapter 3, "Common System Procedures".
5. Press (ENTER).

   The system displays the Adapter Selection Screen (Figure 5-32).

```
Specify the number of SMC Ethernet Adapters to be configured

SMC ISA Adapters:

                          Apply          Reset

Use TAB/BACK TAB to move between fields.  When form is complete,
TAB to the "Action:" field, select "Apply", and press the space
bar to continue
```

Figure 5-32. Adapter Selection Screen

6. Use the left ◄ and right ► arrows on your keyboard to move through the field selections.
7. Select 1.
8. Press the down ▼ arrow to move to the Apply field.
9. Press ENTER.

   The system displays the Access Mode Selection Screen (Figure 5-33).

```
ADAPTOR:

This screen allows you to select either Memory-Mapped or IO-Mapped
for access mode of adapter.

If you are not using SMC 8416 adapter, select Memory-Mapped mode

Access Mode:

                    [ Apply ]        [ Reset ]

Use TAB/BACK TAB to move between fields.  When form is complete,
TAB to the "Action:" field, select "Apply", and press the space
bar to continue
```

Figure 5-33. Access Mode Selection Screen

10. Use the left ◄ and right ► arrows on your keyboard to move through the field selections.
11. Select `Memory-Mapped`.
12. Press the down ▼ arrow to move to the `Apply` field.
13. Press ENTER.

    The system displays the SMCETH Parameter Selection Screen (Figure 5-34).

```
ADAPTOR: SMCETH

This screen allows you to select various parameters to be
configured for adapter 1.

Interrupt Vector:
    I/O Address:
    RAM Address:

                    [ Apply ]        [ Reset ]

Use TAB/BACK TAB to move between fields.  When form is complete,
TAB to the "Action:" field, select "Apply", and press the space
bar to continue
```

Figure 5-34. SMCETH Parameter Selection Screen

14. Use the left ◄ and right ► arrows on your keyboard to move through the field selections.
15. Select the appropriate vector number.

    The vector number is determined by the INTUITY CONVERSANT Hardware Resource Allocator. See "Hardware Resource Allocator Operation" in Appendix A, "System Configuration".
16. Use the left ◄ and right ► arrows on your keyboard to move through the field selections.
17. Select the appropriate I/O base address.

    The I/O base address is determined by the INTUITY CONVERSANT Hardware Resource Allocator. See "Hardware Resource Allocator Operation" in Appendix A, "System Configuration".
18. Use the left ◄ and right ► arrows on your keyboard to move through the field selections.
19. Select the appropriate RAM base address.

    The RAM base address is determined by the INTUITY CONVERSANT Hardware Resource Allocator. See "Hardware Resource Allocator Operation" in Appendix A, "System Configuration".

20. Press the down ▼ arrow to move to the `Apply` field.
21. Press ENTER.

    The system displays a series of messages.
22. Remove the diskette labeled "SMC Ethernet Device Driver ISA Release 3.05 1 of 1" from the diskette drive. See "Inserting and Removing Diskettes" in Chapter 3, "Common System Procedures".
23. Reboot the system.
24. Continue with the next procedure, "Installing the Version 2 LAN Circuit Card."

Installing the Version 2 LAN Circuit Card

To install Version 2 of the Ethernet LAN circuit card, do the following:

1. Run the Hardware Resource Allocator to determine the configuration and slot assignment of the Version 2 LAN circuit card. See "Adding Hardware to an Existing Configuration" in Appendix A, "System Configuration".
2. Record the output.
3. Shut down the system. See "Shutting Down the Voice System" in Chapter 3, "Common System Procedures".
4. Install the Version 2 LAN circuit card. See "Installing a Circuit Card" above for the procedure.
5. Continue with the next procedure, "Configuring the Version 2 LAN Circuit Card."

Configuring the Version 2 LAN Circuit Card

To configure the Version 2 LAN circuit card, do the following:

1. Insert the diskette labelled "SMC 8416 Initializer" into the diskette drive. See "Inserting and Removing Diskettes" in Chapter 3, "Common System Procedures".
2. Reboot the system. See "Rebooting the UNIX System" in Chapter 3, "Common System Procedures".

3. The system will boot off of the diskette. This will initialize the Version 2 circuit card with the following values:

Field	Value
I/O base address	280
IRQ	10
RAM base address	D8000
Access mode	Memory-Mapped
PnP	Disabled

The system displays the following message:

```
PLEASE REBOOT NOW.
```

4. Remove the diskette labelled “SMC 8416 Initializer” from the diskette drive. See “Inserting and Removing Diskettes” in Chapter 3, “Common System Procedures”.
5. Reboot the system. See “Rebooting the UNIX System” in Chapter 3, “Common System Procedures”.
6. If the initializing values match the values you received from the Hardware Resource Allocator, skip this step and continue with Step 10.

   If the initializing values do not match the values you received from the Hardware Resource Allocator, complete the following Steps a through c:

   NOTE:
   The discrepancy in values will create error messages. Ignore these messages.

   a. Enter **/etc/ezsetup**

      The system displays the SMC LAN Adapter Setup screen (Figure 5-35).

```
SMC LAN Adapter Setup Program -- Version 1.21


Board Type:   8216C
Node Address: 0000C0314EDB

                    Current Setup

I/O Base Address    280
IRQ                 15
RAM Size            16 K
WIN Size            16 K
RAM Base Address    0D8000
Add Wait States     Yes
Network Connection  TwPr-No Link
Link Integrity      n/a
ROM Size            Disabled
ROM Base Address    Disabled
Pnpboot             n/a


Do you want to change the setup? (y)->
```

Figure 5-35. SMC LAN Adapter Setup Screen

b. Enter **y**

c. Change the appropriate values.

7. Enter **/etc/confnet.d/configure -i**

   The system displays the following message:

   ```
   These are the device(s) available on your system:
   1   sme_0
   ```

   ```
   Type the number of the device(s) to be configured with
   inet [?,??,q]
   ```

8. Enter the appropriate number.

   The system displays the following message:

   ```
   Please enter the IP host name for device sme_0:
   ```

9. Enter your machine name.

   CAUTION:
   Do not take the default.

   The system displays the following message:

   ```
   Please initialize the IP address for host XXX:
   ```

10. Enter the IP address.

    The system displays the following message:

    ```
    Configure host XXX with default Ethernet(TM)ifconfig
    options?
    Info message is long. (yes no ClassC BerkeleyC info;
    default: info)
    ```

11. Enter the **ClassC**

    The system displays the system prompt.

12. Continue with the next procedure, "Verifying the Version 2 LAN Circuit Card Installation."

Verifying the Version 2 LAN Circuit Card Installation

To set the Version 2 LAN circuit card installation, do the following:

1. Reboot the system. See "Rebooting the UNIX System" in Chapter 3, "Common System Procedures".
2. Check the message log report for TCP/IP or LAN adapter errors. See Chapter 1, "Getting Started," in *INTUITY™ CONVERSANT® System Version 6.0 System Alarms and Log Messages*, 585-310-182.
3. Verify that you have network connectivity using the **ping** command. See Appendix A, "Summary of Commands," in *INTUITY™ CONVERSANT® System Version 6.0 Administration*, 585-310-591.

Replacing a Version 2 LAN Circuit Card

To replace a Version 2 LAN circuit card, do the following:

1. Run the Hardware Resource Allocator to determine the configuration and slot assignment of the Version 2 LAN circuit card. See "Adding Hardware to an Existing Configuration" in Appendix A, "System Configuration".
2. Record the output.
3. Complete the "Installing the Version 2 LAN Circuit Card" procedure above.
4. Complete the "Configuring the Version 2 LAN Circuit Card" procedure above.
5. Complete the "Verifying the Version 2 LAN Circuit Card Installation" procedure above.

You have completed this procedure.

Upgrading the INTUITY CONVERSANT System from a Version 1 LAN Circuit Card to a Version 2 LAN Circuit Card

To upgrade the INTUITY CONVERSANT system from a Version 1 LAN circuit card to a Version 2 LAN circuit card, you must:

- Determine the current setup
- Remove the network entries
- Upgrade the hardware driver
- Upgrade the LAN circuit card
- Establish the network entries

Determining the Current Setup

To determine the current setup, do the following:

1. If you are not already logged in as **root**, do so now.
2. Stop the voice system. See "Stopping the Voice System" in Chapter 3, "Common System Procedures".
3. Start the virtual terminal layer on the system.
4. Enter **/etc/ezsetup**

   The system displays the SMC LAN Adapter Setup screen (Figure 5-35).
5. Record the values in Table 5-2.

Table 5-2. SMC LAN Adapter Setup

Field	Value
I/O Base address	
IRQ	
RAM size	
RAM Base address	
Add wait states	
Network connection	
Link integrity	
ROM size	
ROM base address	

NOTE:
The information in the `Board Type` and `Node Address` fields does not need to be recorded.

NOTE:
The `WIN Size` field is a new parameter for the Version 2 circuit card. The value displayed in the `WIN Size` field is defaulted to the same as the value in the `RAM Size` field.

NOTE:
The `Pnpboot` parameter does not apply to the Version 1 circuit card.

6. Enter **n**
7. Continue with the next procedure, "Removing Network Entries."

Removing Network Entries

CAUTION:
You must complete this procedure or you may lose access to your system.

To remove the network entries, do the following:

1. Enter **vi /etc/vfstab**
2. Comment out all network entries by putting a # at the beginning of the line specifying a remote file system.
3. Continue with the next procedure, "Upgrading the Hardware Driver."

Upgrading the Hardware Driver

To upgrade the hardware driver, do the following:

1. Remove the Version 1 hardware driver by entering **pkgrm sme42L**

   The system displays the following message:

   ```
   The following package is currently installed:
     1. sme42L      SMC Ethernet STREAMS Device Driver
                    SVR4.2(Lachman TCP/IP)
                    (i386) Release 2.12

   Do you want to remove this package [y,n,?,q]:
   ```

2. Enter **y**

CAUTION:
Do not reboot the system or perform an idbuild.

3. Install the Version 1 hardware driver using the values you recorded in Table 5-2. See "Installing the Version 2 Hardware Driver" above for the procedure.

CAUTION:
The Version 2 circuit card uses an 8-k RAM buffer size be sure to select the 8-k version of the RAM address window.

4. Continue with the next procedure, "Upgrading the LAN Circuit Card."

Upgrading the LAN Circuit Card

To upgrade the LAN circuit card, do the following:

1. Shut down the system. See "Shutting Down the Voice System" in Chapter 3, "Common System Procedures".
2. Remove the Version 1 LAN circuit card. See "Removing a Circuit Card" above for the procedure.
3. Install the Version 2 LAN circuit card. See "Installing a Circuit Card" above for the procedure.
4. Insert the diskette labelled *SMC 8416 Initializer* into the diskette drive. See "Inserting and Removing Diskettes" in Chapter 3, "Common System Procedures".
5. Reboot the system. See "Rebooting the UNIX System" in Chapter 3, "Common System Procedures".
6. The system will boot off of the diskette. This will initialize the Version 2 circuit card with the following values:

Field	Value
I/O base address	280
IRQ	10
RAM base address	D8000
Access mode	Memory-Mapped
PnP	Disabled

The system displays the following message:

```
PLEASE REBOOT NOW.
```

7. Remove the diskette labelled *SMC 8416 Initializer* from the diskette drive. See "Inserting and Removing Diskettes" in Chapter 3, "Common System Procedures".

8. Reboot the system. See "Rebooting the UNIX System" in Chapter 3, "Common System Procedures".
9. If the initializing values match the values you entered in Table 5-2, skip this step and continue with Step 10.

   If the initializing values do not match the values you entered in Table 5-2, complete the following Steps a through c:

   NOTE:
   The discrepancy in values will create error messages. Ignore these messages.

   a. Enter **/usr/bin/smc_setup**

      The system displays the SMC LAN Adapter Setup screen (Figure 5-35).

   b. Enter **y**

   c. Change the appropriate values.
10. Reboot the system. See "Rebooting the UNIX System" in Chapter 3, "Common System Procedures".
11. Check the message log report for TCP/IP or LAN adapter errors. See Chapter 1, "Getting Started," in *INTUITY™ CONVERSANT® System Version 6.0 System Alarms and Log Messages*, 585-310-182.
12. Verify that you have network connectivity using the **ping** command. See Appendix A, "Summary of Commands," in *INTUITY™ CONVERSANT® System Version 6.0 Administration*, 585-310-591.
13. Continue with the next procedure, "Establishing Network Entries."

Establishing Network Entries

To establish the network entries, do the following:

1. Enter **vi /etc/vfstab**
2. Remove the # from the beginning of the line specifying a remote file system.

You have completed this procedure.

Token Ring Circuit Cards

The INTUITY CONVERSANT system supports three versions of the Token Ring circuit card. All versions allow you to connect the INTUITY CONVERSANT system to your local area network. The versions are:

- Version 1
- IBM Auto 16/4
- IBM Turbo 16/4

Version 1

Version 1 of the Token Ring circuit card (Figure 5-36) has jumpers and switches that you must set before you install the circuit card in the MAP/100P.

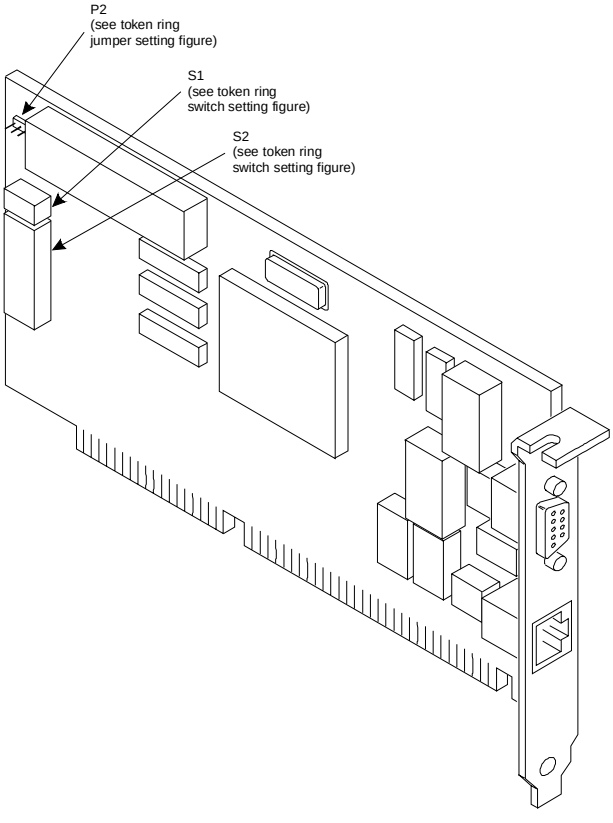

Figure 5-36. Token Ring Circuit Card - Version 1

Jumper Settings

Figure 5-36 shows the location of the 8- or 16-bit mode jumper (P2). You must place the jumper across positions 1 and 2 to select the 8-bit mode, as shown in Figure 5-37.

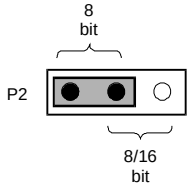

Figure 5-37. Token Ring Card 8- or 16-Bit Mode Jumper

Switch Settings

Figure 5-36 shows the location of switches S1 and S2 on Version 1 of the Token Ring circuit card. Figure 5-38 shows how to set the switches. With the exception of the interrupt level (switches 7 and 8), these are the default settings. Figure 5-39 provides a switch description summary.

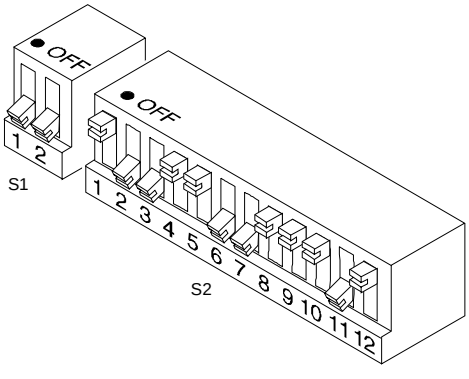

Figure 5-38. Switch Settings for the Token Ring Circuit Card

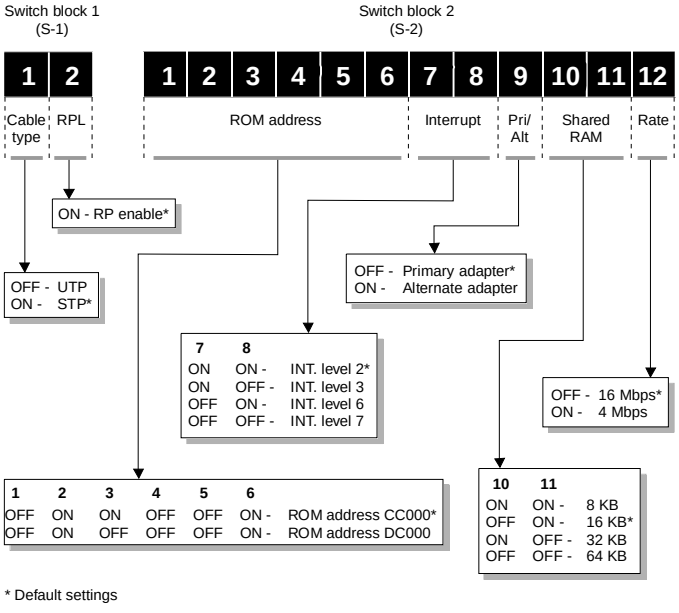

Figure 5-39. Token Ring Circuit Card Switch Description Summary

IBM Auto 16/4

IBM Auto 16/4 of the Token Ring circuit card (Figure 5-40) is software configured. A diskette, provided with the Token Ring circuit card, is used to set the IRQ, I/O address, ROM address, RAM address, and RAM size.

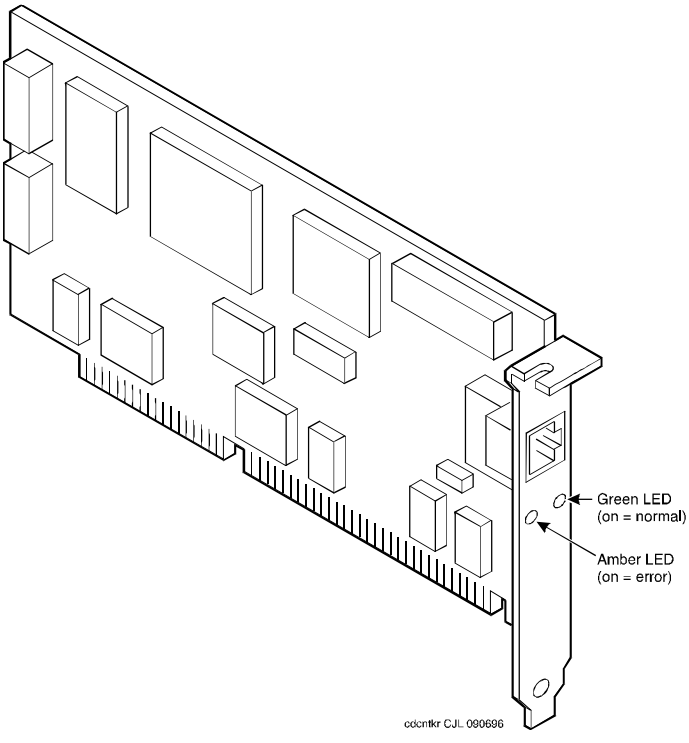

Figure 5-40. Token Ring Circuit Card - IBM Auto 16/4

To configure the IBM Auto 16/4 Token Ring circuit card, do the following:

1. If the Token Ring circuit card is being added to the system, run the INTUITY CONVERSANT Hardware Resource Allocator to determine the resource assignments. See "Hardware Resource Allocator Operation" in Appendix A, "System Configuration".

   Record the parameters listed in Table 5-3.

Table 5-3. Token Ring Circuit Card Settings

Parameter	Setting
IRQ	
ROM address	
RAM address	
I/O address	

   If the Token Ring circuit card is replacing an existing Token Ring circuit card, record and use the existing hardware resource parameters. You can view the existing parameters by entering **/etc/conf/sdevice.d/ibmtok**

   The system displays a message similar to the following message:

```
ibmtok  Y   16  6   1   3   A20 A23 CC000   CDFFF   -1
ibmtok  Y   16  0   0   0   0   0   D0000   D3FFF   -1
```

   Record the parameters listed in Table 5-3.

   In the example message, the IRQ is 3, the ROM address range is CC000 - CDFFF, the RAM address range is D0000 - D3FFF, and the I/O address range is A20 - A23.

2. Verify that IRQ being used by the existing Token Ring circuit card, or designated by the Hardware Resource Allocator, is available.

   To set the IRQs complete the following Steps a and b:

   a. Enter **cd /etc/conf/cf.d**

   b. Enter **awk '$6==2||$6==3||$6==9{print$0}' sdevice**

      If this command generates no output, the IRQs are available.

      If the command generates output specifying ibmtok, the IRQs are available.

      If the command generates any other output the IRQs are not available.

3. Verify that the CPU BIOS ROM address is not **DC000 - DDFFF**. See "P5 200 MHz CPU Circuit Card" for the procedure.

4. Make sure the CPU ROM is not shadowed. See "P5 200 MHz CPU Circuit Card" for the procedure.

5. Install the new Token Ring circuit card. See "Installing a Circuit Card" for the procedure.

   NOTE:
   Complete all 10 steps in the installation procedure.

6. Connect the Token Ring circuit card to the LAN.

   CAUTION:
   Do not use a 10 Base T (802.3) wire to connect the Token Ring circuit card to the LAN.

7. Insert the diskette labeled *Token Ring Setup Floppy* into the diskette drive. See "Inserting and Removing Diskettes" in Chapter 3, "Common System Procedures".

8. Reboot the system. See "Rebooting the UNIX System" in Chapter 3, "Common System Procedures".

   The system displays the following message:

   ```
   Starting PC DOS

   PC DOS 7.0 Startup Menu

   1.  IBM Auto 16/4 Token-Ring ISA Extended Diagnostics
   2.  IBM Auto 16/4 Token-Ring ISA Configuration Using
   LANAID

   Enter a choice:
   ```

9. Enter **2**

   The system displays the following message:

   ```
   Hit any key to continue with LANAID from diskette or
   remove the diskette and reboot the system normally.
   ```

10. Press (ENTER).

    The system displays the LANAID Copyright screen (Figure 5-41).

```
                LAN Adapter Installation and Diagnostics
                Version 1.4
                (C) Copyright IBM Corporation 1995


U.S. Government users restricted rights - Use, duplication or disclosure
restricted by GSA ADP schedule contract with IBM Corporation

          [Continue]      [Enter]
```

Figure 5-41. LANAID Copyright Screen

11. Press (ENTER) to accept the default of `Continue`.

    The system displays the following message:

    `Querying your machines current configuration.`

    `Please wait.`

    `To accept the Fast Path configuration and perform Fast Path, select one of the Fast Path options.`

    `To bypass the Fast Path options, select <Standard Install>`

    `Default = Standard Install`

12. Press (ENTER) to accept the default.

    The system displays the Standard Installation Options screen (Figure 5-42).

```
MAC Address                          Alternative Format
[                          ]         [                          ]

                    Select a Function Below:

                    [Configuration]
                    [Software     ]
                    [Quick Test   ]

[Exit] [Help]
```

Figure 5-42. Standard Installation Options Screen

13. Press (ENTER) to accept the default of `Configuration`.

    The system displays the Configuration Parameters screen (Figure 5-43).

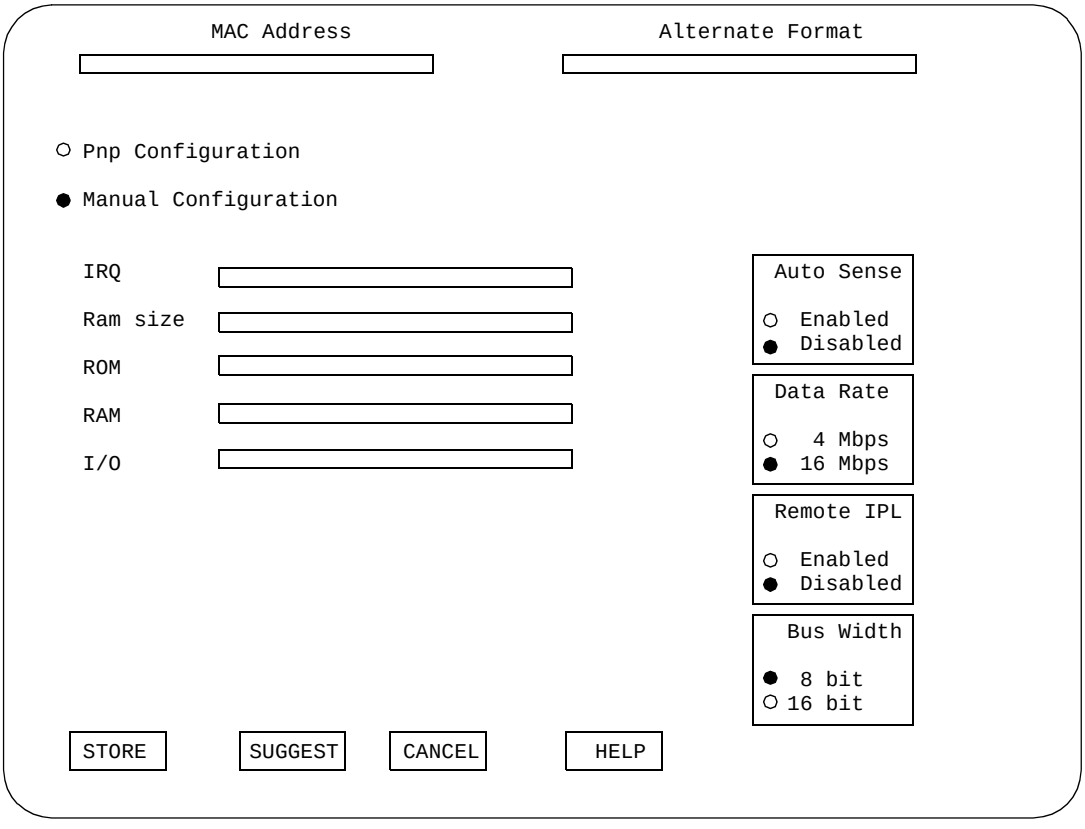

Figure 5-43. Configuration Parameters Screen

14. If your system is equipped with a mouse, complete the following Steps a through q to set the configuration parameters.

    If your system is not equipped with a mouse, skip to Step 15.

    a. Click on `Manual Configuration`.

    b. Click on `IRQ`.

    c. Choose the IRQ you recorded in Table 5-3.

    NOTE:
    The phrase “in use” next to an option indicates that the option is being used for another circuit card. If there is no other circuit card in the system using IRQ 2 or 3, the system may still indicate that one of these IRQs is “in use.” In this instance the system is referring to the Token Ring circuit card you are installing and the “in use” IRQ may be used.

    d. Click on `ROM`.

    e. Choose the ROM address you recorded in Table 5-3.

f. Click on `RAM`. Use the up ▲ and `down` ▼ arrows to move the cursor.

g. Choose the RAM address you recorded in Table 5-3.

h. Click on `I/O`. Use the up ▲ and `down` ▼ arrows to move the cursor.

i. Choose the I/O address you recorded in Table 5-3.

j. Click on `16 Kbytes` in the `RAM Size` field.

k. Click on `Disabled` in the `Auto Sense` field.

l. Click on `16 Mbps` in the `Data Rate` field.

m. Click on `Disabled` in the `Remote IPL` field.

n. Click on `8 bit` in the `Bus Width` field.

o. Click on `Store`.

p. Click on `Done`.

The system displays the Standard Installation Options screen (Figure 5-42).

q. Click on `Quick Test`.

15. If your system is not configured with a mouse, complete the following Steps a though q to set the configuration parameters.

a. Place the cursor on `Manual Configuration`. Use the up ▲ and `down` ▼ arrows to move the cursor.

b. Press ENTER.

c. Set the IRQ.

1. Place the cursor on `IRQ`. Use the up ▲ and `down` ▼ arrows to move the cursor.

2. Press ENTER.

The system displays a list of choices.

3. Use the up ▲ and `down` ▼ arrows to highlight the IRQ you recorded in Table 5-3.

NOTE:
The phrase “in use” next to an option indicates that the option is being used for another circuit card. If there is no other circuit card in the system using IRQ 2 or 3, the system may still indicate that one of these IRQs is “in use.” In this instance the system is referring to the Token Ring circuit card you are installing and the “in use” IRQ may be used.

4. Press ENTER.

d. Set the RAM size.

1. Place the cursor on `RAM Size`. Use the up ▲ and down ▼ arrows to move the cursor.
2. Press ENTER.

   The system displays a list of choices.
3. Use the up ▲ and down ▼ arrows to highlight the RAM size you recorded in Table 5-3.
4. Press ENTER.

e. Set the ROM address.

1. Place the cursor on `ROM`. Use the up ▲ and down ▼ arrows to move the cursor.
2. Press ENTER.

   The system displays a list of choices.
3. Use the up ▲ and down ▼ arrows to highlight the ROM address you recorded in Table 5-3.
4. Press ENTER.

f. Set the RAM address.

1. Place the cursor on `RAM`. Use the up ▲ and down ▼ arrows to move the cursor.
2. Press ENTER.

   The system displays a list of choices.
3. Use the up ▲ and down ▼ arrows to highlight the RAM address you recorded in Table 5-3.
4. Press ENTER.

g. Set the I/O address.

1. Place the cursor on `I/O`. Use the up ▲ and down ▼ arrows to move the cursor.
2. Press ENTER.

   The system displays a list of choices.
3. Use the up ▲ and down ▼ arrows to highlight the I/O address you recorded in Table 5-3.
4. Press ENTER.

h. Disable the Auto Sense function.

   1. Press TAB.

      This will place the cursor in the `AUTO Sense` field.

   2. Place the cursor on `Disable`. Use the up ▲ and down ▼ arrows to move the cursor.

   3. Press ENTER.

i. Set the Data Rate.

   1. Press TAB.

      This will place the cursor in the `Data Rate` field.

   2. Place the cursor on `16 Mbps`. Use the up ▲ and down ▼ arrows to move the cursor.

   3. Press ENTER.

j. Disable the Remote IPL.

   1. Press TAB.

      This will place the cursor in the `Remote IPL` field.

   2. Place the cursor on `Disable`. Use the up ▲ and down ▼ arrows to move the cursor.

   3. Press ENTER.

k. Set the Bus Width.

   1. Press TAB.

      This will place the cursor in the `Bus Width` field.

   2. Place the cursor on `8 bit`. Use the up ▲ and down ▼ arrows to move the cursor.

   3. Press ENTER.

l. Press TAB until the cursor is on `Store`.

m. Press ENTER.

n. Press TAB until the cursor is on `Done`.

o. Press ENTER.

   The system displays the Standard Installation Options screen (Figure 5-42).

p. Press TAB until the cursor is on `Quick Test`.

q. Press ENTER.

   The system tests the configuration of the Token Ring circuit card.

r. Press TAB until the cursor is on `Cancel`.

s. Press ENTER.

t. Press TAB until the cursor is on `Exit`.

u. Press ENTER.

v. Press ENTER.

16. Remove the diskette labeled “LANAID” into the diskette drive. See “Inserting and Removing Diskettes” in Chapter 3, ‘‘Common System Procedures’’.

17. Perform a hard reboot of the system. See “Rebooting the UNIX System” in Chapter 3, ‘‘Common System Procedures’’.

IBM Turbo 16/4

IBM Turbo 16/4 of the Token Ring circuit card (Figure 5-44) is software configured. This is the latest version of the Token Ring circuit card. A diskette, provided with the Token Ring circuit card, is used to set the IRQ, I/O address, ROM address, RAM address, and RAM size.

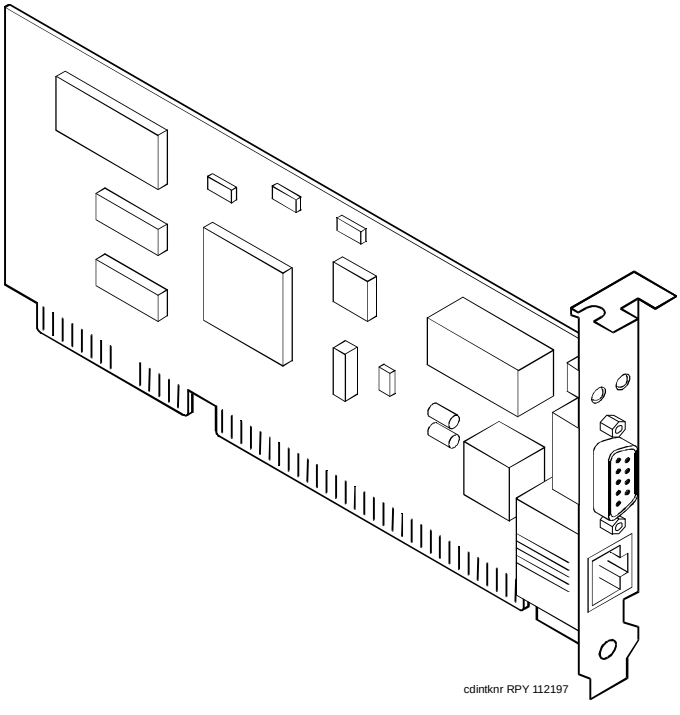

Figure 5-44. Token Ring Circuit Card - IBM Turbo 16/4

To configure the IBM Turbo 16/4 Token Ring circuit card, do the following:

1. If the Token Ring circuit card is being added to the system, run the INTUITY CONVERSANT Hardware Resource Allocator to determine the resource assignments. See "Hardware Resource Allocator Operation" in Appendix A, "System Configuration".

   Record the parameters listed in Table 5-4.

Table 5-4. Token Ring Circuit Card Settings

Parameter	Setting
IRQ	
ROM address	
RAM address	
I/O address	

   If the Token Ring circuit card is replacing an existing Token Ring circuit card, record and use the existing hardware resource parameters. You can view the existing parameters by entering **/etc/conf/sdevice.d/ibmtok**

   The system displays a message similar to the following message:

```
ibmtok  Y   16  6   1   3   A20 A23 CC000   CDFFF   -1
ibmtok  Y   16  0   0   0   0   0   D0000   D3FFF   -1
```

   Record the parameters listed in Table 5-3.

   In the example message, the IRQ is 3, the ROM address range is CC000 - CDFFF, the RAM address range is D0000 - D3FFF, and the I/O address range is A20 - A23.

2. Verify that IRQ being used by the existing Token Ring circuit card, or designated by the Hardware Resource Allocator, is available.

   To set the IRQs complete the following Steps a and b:

   a. Enter **cd /etc/conf/cf.d**

   b. Enter **awk '$6==2||$6==3||$6==9{print$0}' sdevice**

      If this command generates no output, the IRQs are available.

      If the command generates output specifying ibmtok, the IRQs are available.

      If the command generates any other output the IRQs are not available.

3. Verify that the CPU BIOS ROM address is not **DC000 - DDFFF**. See "P5 200 MHz CPU Circuit Card" for the procedure.

4. Make sure the CPU ROM is not shadowed. See "P5 200 MHz CPU Circuit Card" for the procedure.

5. Install the new Token Ring circuit card. See "Installing a Circuit Card" for the procedure.

   NOTE:
   Complete all 10 steps in the installation procedure.

6. Connect the Token Ring circuit card to the LAN.

   CAUTION:
   Do not use a 10 Base T (802.3) wire to connect the Token Ring circuit card to the LAN.

7. Insert the diskette labeled *Turbo Token Ring Setup Floppy* into the diskette drive. See "Inserting and Removing Diskettes" in Chapter 3, "Common System Procedures", for the procedure.

8. Reboot the system. See "Rebooting the UNIX System" in Chapter 3, "Common System Procedures", for the procedure.

   The system displays the following message:

   ```
   Starting PC DOS...
   7.0 Startup Menu

   PC DOS 7.0 Startup Menu

   1.  IBM Auto/Turbo ISA Configuration using LANAID
   2.  IBM Auto/Turbo ISA Extended Diagnostics

   Enter a choice:
   ```

9. Enter **1**

   The system displays the following message:

   ```
   WARNING: To best avoid conflicts you should boot your
   system as you normally do before running LANAIDC.
   Running LANAIDC after booting from Disk 1 will work,
   but conflict checking will not be as effective.

   NOTE: To run the graphical version of the LANAID
   configuration program for the IBM Auto/Turbo ISA
   adapter, you need to boot your system normally and then
   install LANAID from the diskette by typing a:\install
   at your normal system prompt.

   Hit any key to continue with LANAID from diskette or
   remove the diskette and reboot the system normally...
   ```

10. Press (ENTER).

    The system displays the following message:

    ```
    Enter LANAIDC parameters - reboot your machine when
    done.
    ```

```
     Examples:   /view
                 /help

LANAIDC >
```

11. Enter **/FAST=AUTO16**

    The system displays the following message:

```
...Adapter number 1:

Performing FASTPATH configuration, all other parameters
ignored.

Configuration complete:

         IBM Turbo 16/4 Token-Ring ISA Adapter

        PnP Support:            None Detected
        Adapter Number:         1
        Adapter MAC Address:    00 06 29 6A 89 8F
        Microcode Level:        000400 P3F3A4
        Serial Number:          IBM 1080-296A898F
        Adapter Mode:           AUTO 16 Compatible
        Configuration:          LEGACY
        Adapter State:          Active
        I/O Address:            A20 - A23
        Interrupt:              10
        RAM Address:            B8000 - DBFFF
        ROM Address:            DC000 - DDFFF
        Remote IPL:             Enabled
        Token-Ring data rate:   16
        Auto Sense data rate:   Enabled
        Adapter bus width:      16


LANAIDC >
```

12. Enter **/AD=1**

    The system displays the following message:

```
LANAIDC >
```

13. Enter **/CONFIG=LEGACY**

    The system displays the following message:

```
Configuration complete:

         IBM Turbo/16/4 Token-Ring ISA Adapter

        PnP Support:            BIOS
        Adapter Number:         1
        Adapter MAC Address:    00 06 29 6A 89 8F
        Microcode Level:        000400 P3F3A4
        Serial Number:          IBM 1080-296A898F
        Adapter Mode:           AUTO 16 Compatible
```

```
Configuration:          LEGACY
Adapter State:          Active
I/O Address:            A20 - A23
Interrupt:              11
RAM Address:            C8000 - CBFFF
ROM Address:            D4000 - D5FFF
Remote IPL:             Enabled
Token-Ring data rate:   16
Auto Sense data rate:   Enabled
Adapter bus width:      16


LANAIDC >
```

14. Enter **/IO=A20**

    The system displays the following message:

```
Configuration complete:

         IBM Turbo/16/4 Token-Ring ISA Adapter

PnP Support:            BIOS
Adapter Number:         1
Adapter MAC Address:    00 06 29 6A 89 8F
Microcode Level:        000400 P3F3A4
Serial Number:          IBM 1080-296A898F
Adapter Mode:           AUTO 16 Compatible
Configuration:          LEGACY
Adapter State:          Active
I/O Address:            A20 - A23
Interrupt:              11
RAM Address:            C8000 - CBFFF
ROM Address:            D4000 - D5FFF
Remote IPL:             Enabled
Token-Ring data rate:   16
Auto Sense data rate:   Enabled
Adapter bus width:      16


LANAIDC >
```

15. Enter **/INT=9**

    CAUTION:
    Be sure to enter 9, do not enter 2.

    The system displays the following message:

```
Configuration complete:

         IBM Turbo/16/4 Token-Ring ISA Adapter
```

```
PnP Support:              BIOS
Adapter Number:           1
Adapter MAC Address:      00 06 29 6A 89 8F
Microcode Level:          000400 P3F3A4
Serial Number:            IBM 1080-296A898F
Adapter Mode:             AUTO 16 Compatible
Configuration:            LEGACY
Adapter State:            Active
I/O Address:              A20 - A23
Interrupt:                9*
RAM Address:              C8000 - CBFFF
ROM Address:              D4000 - D5FFF
Remote IPL:               Enabled
Token-Ring data rate:     16
Auto Sense data rate:     Enabled
Adapter bus width:        16
                * Setting in conflict

LANAIDC >
```

16. Enter **/ROM=<ROM start address>**

    where <ROM start address> is the ROM address you recorded in Table 5-3.

    The system displays the following message:

```
...Warning: Interrupt level in conflict.

Configuration complete:

         IBM Turbo/16/4 Token-Ring ISA Adapter

PnP Support:              BIOS
Adapter Number:           1
Adapter MAC Address:      00 06 29 6A 89 8F
Microcode Level:          000400 P3F3A4
Serial Number:            IBM 1080-296A898F
Adapter Mode:             AUTO 16 Compatible
Configuration:            LEGACY
Adapter State:            Active
I/O Address:              A20 - A23
Interrupt:                9*
RAM Address:              C8000 - CBFFF
ROM Address:              <ROM address>
Remote IPL:               Enabled
Token-Ring data rate:     16
Auto Sense data rate:     Enabled
Adapter bus width:        16
                * Setting in conflict

LANAIDC >
```

17. Enter **/RAM=<RAM start address>**

where <RAM start address> is the RAM address you recorded in Table 5-3.

The system displays the following message:

```
...Warning: Interrupt level in conflict.

Configuration complete:

         IBM Turbo/16/4 Token-Ring ISA Adapter

        PnP Support:             BIOS
        Adapter Number:          1
        Adapter MAC Address:     00 06 29 6A 89 8F
        Microcode Level:         000400 P3F3A4
        Serial Number:           IBM 1080-296A898F
        Adapter Mode:            AUTO 16 Compatible
        Configuration:           LEGACY
        Adapter State:           Active
        I/O Address:             A20 - A23
        Interrupt:               9*
        RAM Address:             <RAM address>
        ROM Address:             <ROM address>
        Remote IPL:              Enabled
        Token-Ring data rate:    16
        Auto Sense data rate:    Enabled
        Adapter bus width:       16
                    * Setting in conflict

LANAIDC >
```

18. Enter **/RAMSIZE=16**

The system displays the following message:

```
...Warning: Interrupt level in conflict.

Configuration complete:

         IBM Turbo/16/4 Token-Ring ISA Adapter

        PnP Support:             BIOS
        Adapter Number:          1
        Adapter MAC Address:     00 06 29 6A 89 8F
        Microcode Level:         000400 P3F3A4
        Serial Number:           IBM 1080-296A898F
        Adapter Mode:            AUTO 16 Compatible
        Configuration:           LEGACY
        Adapter State:           Active
        I/O Address:             A20 - A23
        Interrupt:               9*
        RAM Address:             <RAM address>
        ROM Address:             <ROM address>
        Remote IPL:              Enabled
        Token-Ring data rate:    16
```

```
        Auto Sense data rate:   Enabled
        Adapter bus width:      16
                    * Setting in conflict

LANAIDC >
```

19. Enter **/RS=16**

    The system displays the following message:

```
...Warning: Interrupt level in conflict.

Configuration complete:

         IBM Turbo/16/4 Token-Ring ISA Adapter

        PnP Support:            BIOS
        Adapter Number:         1
        Adapter MAC Address:    00 06 29 6A 89 8F
        Microcode Level:        000400 P3F3A4
        Serial Number:          IBM 1080-296A898F
        Adapter Mode:           AUTO 16 Compatible
        Configuration:          LEGACY
        Adapter State:          Active
        I/O Address:            A20 - A23
        Interrupt:              9*
        RAM Address:            <RAM address>
        ROM Address:            <ROM address>
        Remote IPL:             Enabled
        Token-Ring data rate:   16
        Auto Sense data rate:   Enabled
        Adapter bus width:      16
                    * Setting in conflict

LANAIDC >
```

20. Enter **/AUTO=Y**

```
...Warning: Interrupt level in conflict.

Configuration complete:

         IBM Turbo/16/4 Token-Ring ISA Adapter

        PnP Support:            BIOS
        Adapter Number:         1
        Adapter MAC Address:    00 06 29 6A 89 8F
        Microcode Level:        000400 P3F3A4
        Serial Number:          IBM 1080-296A898F
        Adapter Mode:           AUTO 16 Compatible
        Configuration:          LEGACY
        Adapter State:          Active
        I/O Address:            A20 - A23
        Interrupt:              9*
        RAM Address:            <RAM address>
        ROM Address:            <ROM address>
```

```
            Remote IPL:              Enabled
            Token-Ring data rate:    16
            Auto Sense data rate:    Enabled
            Adapter bus width:       16
                        * Setting in conflict

LANAIDC >
```

21. Enter **/V**

    The system displays the following message:

```
...Warning: Interrupt level in conflict.

Configuration complete:

             IBM Turbo/16/4 Token-Ring ISA Adapter

            PnP Support:             BIOS
            Adapter Number:          1
            Adapter MAC Address:     00 06 29 6A 89 8F
            Microcode Level:         000400 P3F3A4
            Serial Number:           IBM 1080-296A898F
            Adapter Mode:            AUTO 16 Compatible
            Configuration:           LEGACY
            Adapter State:           Active
            I/O Address:             A20 - A23
            Interrupt:               9*
            RAM Address:             <RAM address>
            ROM Address:             <ROM address>
            Remote IPL:              Enabled
            Token-Ring data rate:    16
            Auto Sense data rate:    Enabled
            Adapter bus width:       16
                        * Setting in conflict

LANAIDC >
```

22. If the configuration is correct, reboot the system. See "Rebooting the UNIX System" in Chapter 3, "Common System Procedures", for the procedure.

Installing the Token Ring Hardware Support Package

To install the Token Ring hardware support package, do the following:

1. If you are not already logged in as **root**, do so now.
2. Insert the diskette labeled "Token Ring Hardware Support" into the diskette drive. See "Inserting and Removing Diskettes" in Chapter 3, "Common System Procedures", for the procedure.
3. Enter **pkgadd -d diskette1**

   The system displays the following message:

```
Insert diskette into Floppy Drive 1.
Type [go] when ready,
  or [q] to quit: (default: go)
```

4. Press (ENTER).

   The system displays the following message:

```
Installation in progress. Do not remove the diskette.

The following packages are available:

1 tok       Token Ring Hardware Support
            (i386) 1.3

Select the package(s) you wish to process (or 'all' to
process all packages). (default: all) [?,??,q]
```

5. Press (ENTER).

   The system displays the following message:

```
PROCESSING:
Package: Token Ring Hardware Support (tok) from
<diskette1>.
```

   The system displays a series of informational screens. Continue to press (ENTER) until the system displays the following message:

```
Do you wish to continue with installation? [y,n,?,q]:
(default: y)
```

6. Press (ENTER).

   During the installation, the system presents a blue screen. In this screen, input the number and type of Token Ring cards in the system, and the hardware settings of the card.

   The INTUITY CONVERSANT system supports the use of *one* IBM Token Ring Network 16/4 Adapter circuit card. Use this information as well as the output from the INTUITY CONVERSANT Hardware Resource Allocator to enter the data in this screen.

   NOTE:
   The Token Ring Network Adapter circuit card is Version 16/4, not 16/4A.

   CAUTION:
   Do not use ROM address CC000.

   If, during the installation of the Token Ring Hardware Support package, you did not see the blue screen, the installation was not successful. Reinstall the package by completing the following Steps a through h:

   a. From the system prompt #, enter **pkginfo**

b. Find the tok (Token Ring Hardware Support) package and use the **pkgrm** command to remove it.

c. Enter **shutdown -g0 -y -i6**

When the system reboots and comes back up, it displays the login screen.

d. Press (ALT) (E).

e. Enter **root**

f. Enter your root password.

The system responds by displaying the system prompt #.

g. Enter **rm /etc/inst/scripts/postreboot.sh**

h. Repeat the installation procedure for installing the Token Ring Hardware Support package.

During a successful installation, the system displays the following message:

```
...
Installing Token Ring Hardware Support as <tok>
```

When the package has finished installing, the system displays the following message:

```
Installation of Token Ring Hardware Support (tok) was
successful.
Insert diskette into Floppy Drive 1.
Type [go] when ready.
  or [q] to quit: (default: go)
```

7. Enter **q**

The system responds with a message to say that if all desired packages are installed, the machine should be rebooted.

CAUTION:
Do not reboot the system at this time.

The system displays the system prompt #.

8. Remove the diskette. See "Inserting and Removing Diskettes" in Chapter 3, "Common System Procedures", for the procedure.

Installing the Token Ring Hardware Support Package

To install the Token Ring hardware support package, do the following:

1. If you are not already logged in as **root**, do so now.

2. Insert the diskette labeled “Token Ring Hardware Support” into the diskette drive. See “Inserting and Removing Diskettes” in Chapter 3, “Common System Procedures”.

3. Enter **pkgadd -d diskette1**

   The system displays the following message:

   ```
   Insert diskette into Floppy Drive 1.
   Type [go] when ready,
     or [q] to quit:  (default:  go)
   ```

4. Press (ENTER).

   The system displays the following message:

   ```
   Installation in progress.  Do not remove the diskette.

   The following packages are available:

   1 tok       Token Ring Hardware Support
               (i386) 1.3

   Select the package(s) you wish to process (or ‘all’ to
   process all packages). (default: all) [?,??,q]
   ```

5. Press (ENTER).

   The system displays the following message:

   ```
   PROCESSING:
   Package:  Token Ring Hardware Support (tok) from
   <diskette1>.
   ```

   During the installation, the system presents a blue screen. In this screen, input the number and type of Token Ring cards in the system, and the hardware settings of the card.

   The system displays a series of informational screens.

   The INTUITY CONVERSANT system supports the use of *one* IBM Token Ring Network 16/4 Adapter circuit card. Use this information as well as the output from the INTUITY CONVERSANT Hardware Resource Allocator to enter the data in this screen.

   NOTE:
   The Token Ring Network Adapter circuit card is Version 16/4, not 16/4A.

   The system displays the following message:

   ```
   Do you wish to continue with installation? [y,n,?,q]:
   (default: y)
   ```

   If, during the installation of the Token Ring Hardware Support package, you did not see the blue screen, the installation was not successful. Reinstall the package by completing the following Steps a through h:

   a. From the system prompt #, enter **displaypkg**

b. Find the tok (Token Ring Hardware Support) package and use the **pkgrm** command to remove it.

c. Enter **shutdown -g0 -y -i6**

When the system reboots and comes back up, it displays the login screen.

d. Press (ALT) (E).

e. Enter **root**

f. Enter your root password.

The system responds by displaying the system prompt #.

6. Enter **rm /etc/inst/scripts/postreboot.sh**

g. Repeat the installation procedure for installing the Token Ring Hardware Support package.

7. Press (ENTER).

The system displays the following message:

```
...
Installing Token Ring Hardware Support as <tok>
```

When the package has finished installing, the system displays the following message:

```
Installation of Token Ring Hardware Support (tok) was
successful.
```

```
Insert diskette into Floppy Drive 1.
Type [go] when ready.
   or [q] to quit:  (default:  go)
```

8. Enter **q**

The system responds with a message to say that if all desired packages are installed, the machine should be rebooted.

CAUTION:
Do not reboot the system at this time.

The system displays the system prompt #.

9. Remove the diskette. See "Inserting and Removing Diskettes" in Chapter 3, "Common System Procedures".

PC/ISDN (IPCI) Circuit Card

The PC/ISDN circuit card supports the Adjunct/Switch Application Interface (ASAI).

NOTE:
Other Lucent Technologies documentation may refer to this card as the IPCI card.

There are two types of switches that you must set before you install the PC/ISDN circuit card in the MAP/100P. Figure 5-45 shows the PC/ISDN circuit card with the location of its switches.

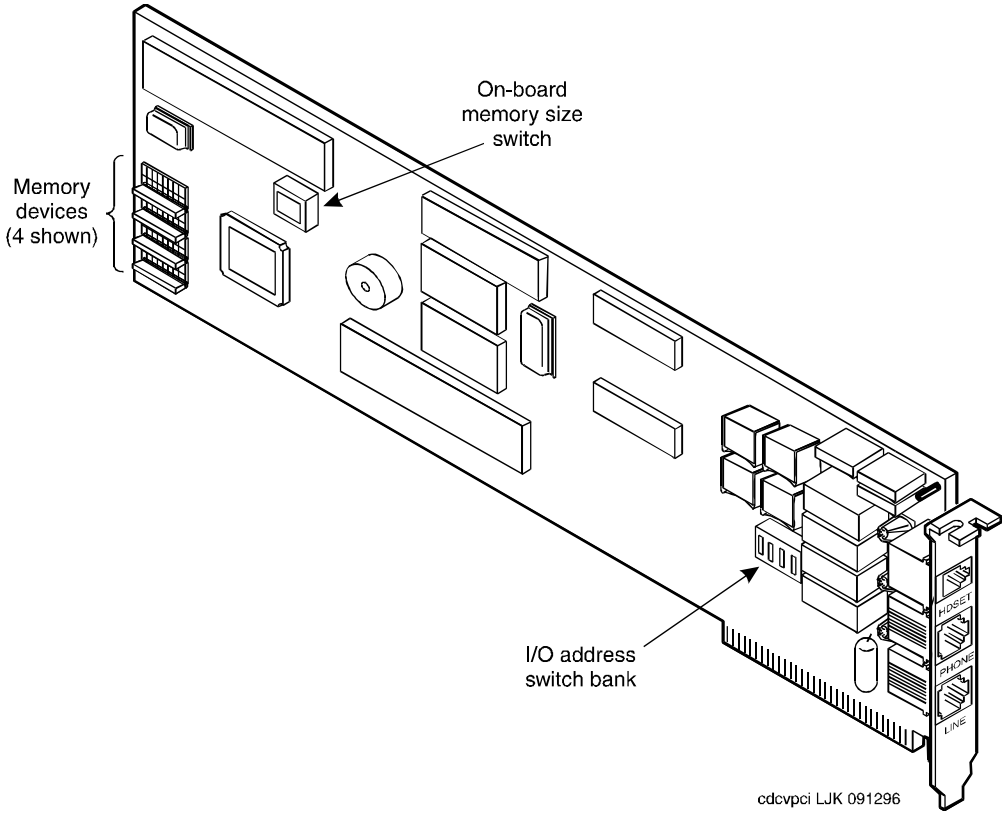

Figure 5-45. PC/ISDN Circuit Card

The first switches are the I/O address switches. These switches determine the I/O address of the PC/ISDN circuit card. These switches should be set as determined by the INTUITY CONVERSANT Hardware Resource Allocator. See "Hardware Resource Allocator Operation" in Appendix A, "System Configuration".

Figure 5-46 shows the I/O address switch settings.

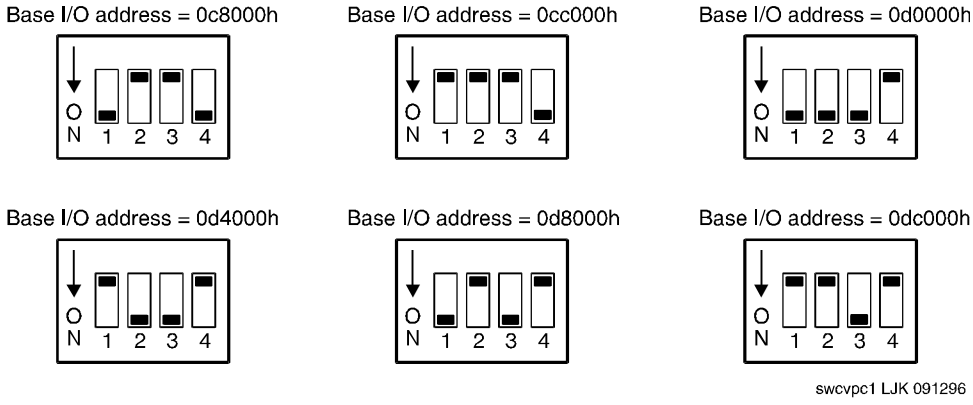

Figure 5-46. PC/ISDN Circuit Card Address Settings

There is also a switch that sets the on-board memory size. The position of this switch is based on the number of memory devices included on the PC/ISDN circuit card. If there are four memory devices, place the switch in the upper position. If there are eight memory devices, place the switch in the lower position.

Figure 5-47 shows the on-board memory size switch positions.

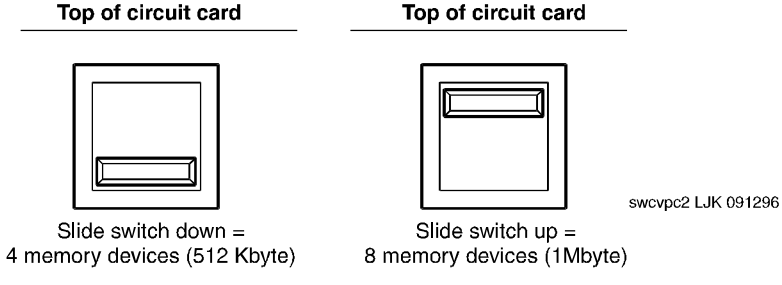

Figure 5-47. PC/ISDN Circuit Card On-Board Memory Size Settings

There are no jumpers to set on the PC/ISDN circuit card.

Asynchronous Circuit Cards

There are two types of asynchronous cards:

- 8-Port IPC-900 or Gemini-1000 Asynchronous Serial Card
- EQUINOX Megaport 8C5 8-Port Serial I/O Card

8-Port IPC-900 or Gemini-1000 Asynchronous Serial Card

Figure 5-48 shows the IPC-900 or Gemini-1000 asynchronous serial card with its switches and jumper locations. Check and set the IRQ settings, I/O switches, and memory switches on the asynchronous card before installing it.

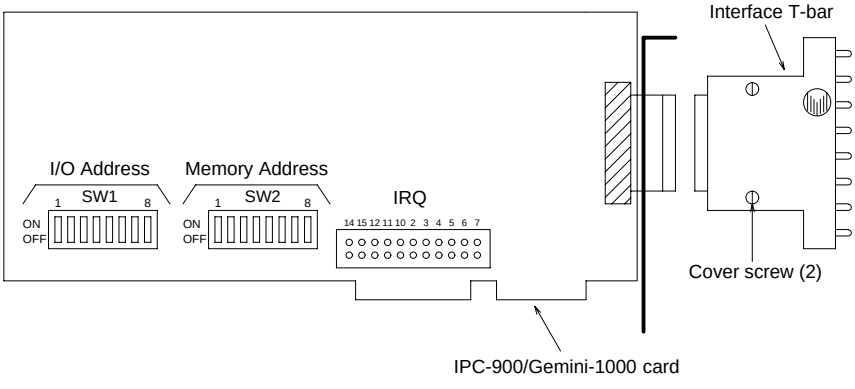

Figure 5-48. IPC-900 or Gemini-1000 Asynchronous Card

Jumper Settings

Figure 5-49 shows the jumper settings on the 8-Port IPC-900 or Gemini-1000 asynchronous serial card.

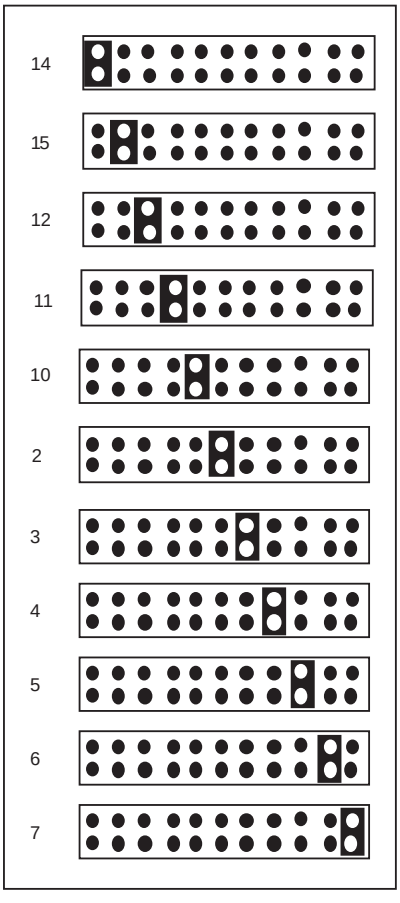

Figure 5-49. Interrupt Jumper Settings for IPC-900 or Gemini-1000 Asynchronous Card

8-Port Asynchronous Circuit Card (EQUINOX Megaport 8C5 8-Port Serial I/O Board)

Figure 5-50 shows the EQUINOX Megaport 8C5 8-Port Asynchronous circuit card and the location of the jumpers. Verify that no jumpers are set.

There are no switches to set in the 8-Port Asynchronous circuit card.

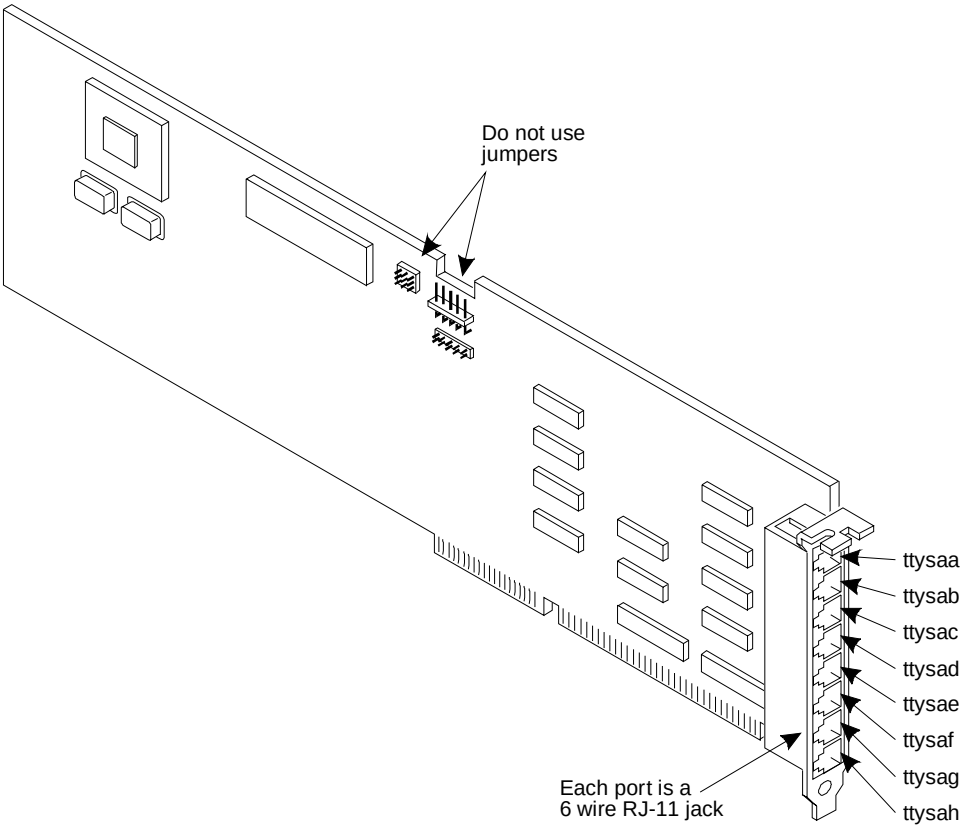

Figure 5-50. 8-Port Asynchronous Circuit Card (EQUINOX Megaport 8C5 8-Port Serial I/O Board)

Installing the Equinox Megaport Card Driver

To install the Equinox Megaport card driver, do the following:

1. If you are not already logged in as **root**, do so now.
2. Enter **pkgadd -d diskette1**

   The system displays the following message:

   ```
   Insert diskette into Floppy Drive 1.
   Type [go] when ready,
       or [q] to quit: (default: go)
   ```

3. Insert the diskette labeled "Equinox Megaport/Megaplex STREAMS Device Driver (ISA/EISA) 1 of 1" into the diskette drive. See "Inserting and Removing Diskettes" in Chapter 3, "Common System Procedures".
4. Press ENTER.

   The system displays the following message:

   ```
   Installation in progress -- do not remove the diskette.

   The following packages are available:
    1. eqx         Equinox Megaport/Megaplex STREAMS
                   Device Driver (ISA/ESA)
                   (i386)

   Select package(s) you wish to process (or 'all' to
   process all packages). (default: all) [?,??,q]:
   ```

5. Press ENTER.

   The system displays the following message:

   ```
   PROCESSING:
   Set: Equinox Megaport/Megaplex STREAMS Device Driver
   (eqx) from <diskette1>

   Equinox Megaport/Megaplex STREAMS Device Driver
   (i386)
   Using </> as the package base directory.
   Lucent Technologies Inc.
   ```

   The system displays several status messages and then the following message:

   ```
   Press Enter to Continue.
   ```

6. Press (ENTER).

   The system displays the following message:

   ```
   What do you wish to install?

   (1) MEGAPORT
   (2) MEGAPLEX
   (H) Help

   Enter 1 or 2 [1]:
   ```

7. Press (ENTER).

   The system displays the following message:

   ```
   Up to 10 MEGAPORT boards can be installed on a system.
   Enter the number of boards you are installing [1]:
   ```

8. Press (ENTER).

   The system displays the following message:

   ```
   Early version MEGAPORT boards required a 64KB buffer
   block instead of the 8KB block used by boards currently
   being manufactured.

   Are you installing any early version MEGAPORT boards
   which require a 64KB buffer block? (Y/N/H) [N]
   ```

9. Press (ENTER).

   The system displays the following message:

   ```
   Where do you wish to install the board(s) in memory:

   (1) Between 640KB and 1MB
   (2) Above 1MB
   (H) Help

   Enter 1 if there is 16 MB or more of physical memory
   installed in your system.
   Enter 2 if there is less than 16 MB of physical memory
   installed in your system.

   Default is between 640KB and 1MB [1]:
   ```

10. Press (ENTER).

    The system displays the following message:

    ```
    8KB of unoccupied memory is required for the MEGAPORT
    board(s). This 8KB memory block must reside on a 8KB
    boundary with the last four hex digits being one of the
    following:

    0000, 2000, 4000, 6000, 8000, a000, c000, e000.

    Enter 8KB common buffer block address [d0000]:
    ```

11. Enter the appropriate memory block boundary.

    The memory block boundary is determined by the INTUITY CONVERSANT Hardware Resource Allocator. See "Hardware Resource Allocator Operation" in Appendix A, "System Configuration".

    The system displays the following message:

    ```
    Each MEGAPORT requires 8KB of unoccupied memory. The
    address of this 8KB control block must end with the last
    four hex digits being one of the following:

    0000, 2000, 4000, 6000, 8000, a000, c000, e000.

    Board 1:        Enter address of 8KB control block
    [d2000]:
    ```

12. Enter the appropriate memory block boundary.

    The memory block boundary is determined by the INTUITY CONVERSANT Hardware Resource Allocator. See "Hardware Resource Allocator Operation" in Appendix A, "System Configuration".

    The system displays the following message:

    ```
    Is this an EISA machine (y/n) [No]?
    ```

13. Press (ENTER).

    The system displays the following message:

    ```
    MEGAPORT CONFIGURATION SUMMARY

    Number of boards installed:         1
    Common 8KB buffer block:            XXXXX
    Board 1, 8KB control block:         XXXXX
    EISA system:                        N

    Is this correct? (y/n)
    ```

14. Enter **y**

    The system displays several status messages and then the following message:

    ```
         The UNIX Operating System kernel will be rebuilt
         to include you configuration changes during the
         next system reboot.

    Installation of Equinox Megaport/Megaplex STREAMS
    Device Driver (ISA/ESA) (eqx) was successful.

    Insert diskette into Floppy Drive 1.
    Type [go] when ready,
        or [q] to quit: (default: go)
    ```

15. Enter **q**
16. Remove the diskette labeled "Equinox Megaport/Megaplex STREAMS Device Driver (ISA/EISA) 1 of 1" from the diskette drive. See "Inserting and Removing Diskettes" in Chapter 3, "Common System Procedures".
17. Reboot the system. See "Rebooting the UNIX System" in Chapter 3, "Common System Procedures".

Installing the Equinox SuperSerial Card Driver

To install the Equinox Megaport card driver, do the following:

1. If you are not already logged in as **root**, do so now.
2. Enter **pkgadd -d diskette1**

   The system displays the following message:

   ```
   Insert diskette into Floppy Drive 1.
   Type [go] when ready,
       or [q] to quit: (default: go)
   ```

3. Insert the diskette labeled "Equinox Megaport/Megaplex STREAMS Device Driver (ISA/EISA) 1 of 1" into the diskette drive. See "Inserting and Removing Diskettes" in Chapter 3, "Common System Procedures".
4. Press (ENTER).

   The system displays the following message:

   ```
   Installation in progress -- do not remove the diskette.

   The following packages are available:
    1. eqn          Equinox SST Loadable STREAMS
                    Device Driver (EISA/ISA/MCA/PCI)
                    (i386)

   Select package(s) you wish to process (or 'all' to
   process all packages). (default: all) [?,??,q]:
   ```

5. Press (ENTER).

   The system displays the following message:

   ```
   PROCESSING:
   Package: Equinox SST Loadable STREAMS Device Driver
   (EISA/ISA/MCA/PCI) (eqn) from <diskette1>

   Equinox SST Loadable STREAMS Device Driver
   (EISA/ISA/MCA/PCI) (i386)
   Using </> as the package base directory.
   Lucent Technologies Inc.
   ```

   The system displays several status messages and then the following message:

   ```
   This seems to be an ISA system. Is this correct[Y/n]?
   ```

6. Enter **y**

   The system displays the following message:

   ```
   Installing for ISA bus system.

   The following i/o ports appear to be free for use by
   Equinox ISA boards:
       220 240 260 280 2a0 2c0 2e0 320 360 3a0 3c0
   Should the driver autoconfigure all Equinox ISA boards
   [Y/n]?
   ```

7. Enter **n**

   The system displays the following message:

   ```
   One 16k block of memory addresses will be used by all
   Equinox ISA boards. This address must meet the
   following criteria:

       1.  In the range of 640 kilobyte to 1 Megabyte or
           above 2 Gigabytes
       2.  No other physical memory (RAM/ROM) present
       3.  Must NOT be cached
       4.  Must begin on a 16k boundary

   An example hexadecimal address is 0xb0000

   Enter your address selection in hexadecimal: 0x
   ```

8. Enter the appropriate address as determined by the Hardware Resource Allocator.

   The memory block boundary is determined by the INTUITY CONVERSANT Hardware Resource Allocator. See "Hardware Resource Allocator Operation" in Appendix A, "System Configuration".

   The system displays the following message:

   ```
   You may enable a selection of baud rates above 38400 for
   all ports by answering "Yes" to the following question.

   If you enable baud rates above 38400, speeds below 300
   baud will be unavailable. Speeds 300 to 38400 are
   unaffected.

   The high baud rates are selected according to the
   following table:

               57600       B50
               76800       B75
               115200      B110
               238400      B134 (depending on board/module
                                (type

   Enable high baud rate selection [y/N]?
   ```

9. Enter **n**

   The system displays the following message:

   ```
   The unix kernel will be rebuilt to include your
   configuration changes during the next system reboot.

   A system rebuild has been requested when the system is
   shutdown. System tunables have been modified.

   Please request a reboot using the “init 6” command to
   use the driver.

   If you desire the default set of port monitors and port
   services to be installed, execute “/etc/equportsetup”
   after the system has rebooted.

   Installation of Equinox SST Loadable STREAMS Device
   Driver (EISA/ISA/MCA/PCI) (equ) was successful.

   Insert diskette into Floppy Drive 1.
   Type [go] when ready,
       or [q] to quit: (default: go)
   ```

10. Enter **q**

11. Remove the diskette labeled “Equinox Megaport/Megaplex STREAMS Device Driver (ISA/EISA) 1 of 1” from the diskette drive. See “Inserting and Removing Diskettes” in Chapter 3, ‘‘Common System Procedures’’.

12. Reboot the system. See “Rebooting the UNIX System” in Chapter 3, ‘‘Common System Procedures’’.

Synchronous Cards

There are two possible types of synchronous cards:

- PC/XL synchronous input/output card (Revision D or newer)
- Lucent FIFO/SIB synchronous host circuit card

PC/XL Synchronous I/O Card

Only one PC/XL synchronous card is supported (Revision D or newer).

The interrupt request (IRQ) line enables the PC/XL to request service from the processor.

Set the IRQ jumper to the value selected by the software configuration program. See “Hardware Resource Allocator Operation” in Appendix A, ‘‘System Configuration’’.

The input/output (I/O) address is the door through which the PC/XL accesses the PC data paths.

Set the I/O address dip switches (switches 1–3) to the default I/0 address 200H.

NOTE:
Switch 4 is not used.

The PC/XL card allows a portion of its on-card memory (RAM) to be accessed (both read and write) by the CPU. All transactions with the PC/XL card take place through this shared memory window (SMW).w4

The location of the SMW is set during linkix_3270 software installation. See "Installing Package 3 (linkix_3270 Supplement)" in Chapter 10, ''Installing the Optional Feature Software''.

The SMW is 16 Kbyte in size and may reside at any available 16 Kbyte boundary below 1 Mbyte. The location is controlled by software, so there are *no* jumpers to adjust for this aspect.

FIFO/SIB Synchronous Host Circuit Card

Up to two FIFO/SIB synchronous host cards are supported. Figure 5-51 shows the FIFO/SIB synchronous host card and the location of the switches and interrupt jumpers.

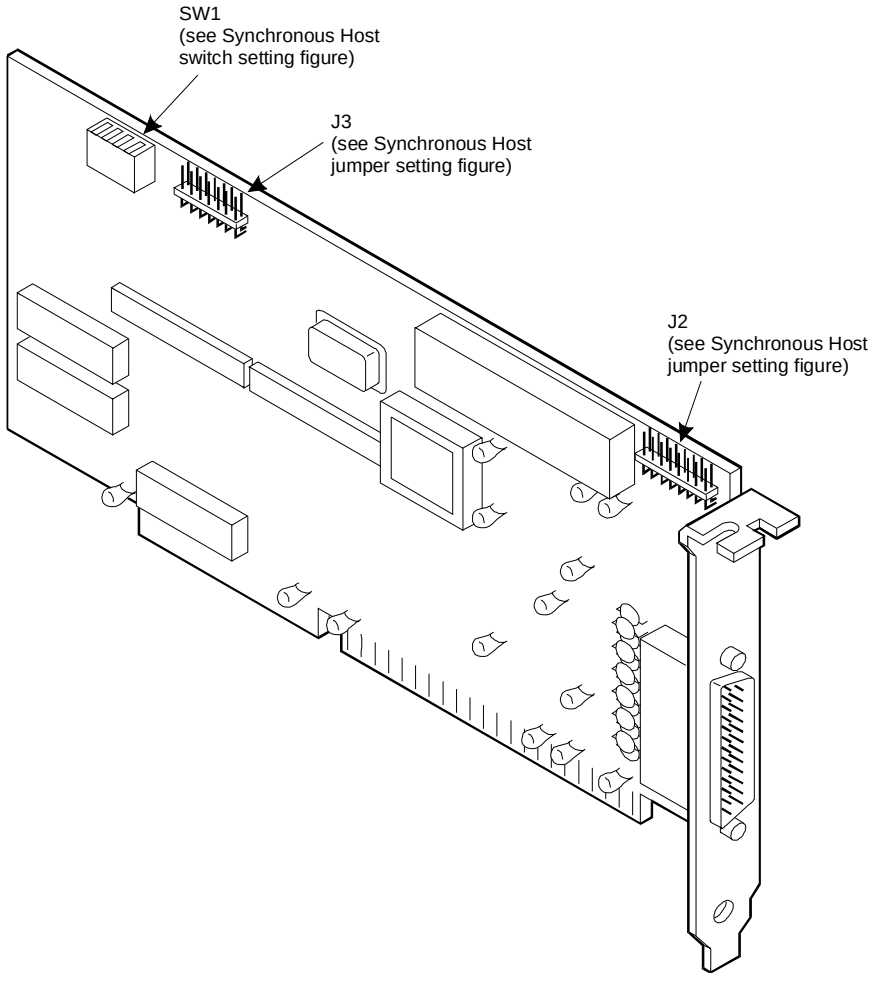

Figure 5-51. FIFO/SIB Synchronous Host Circuit Card

Jumper Settings

There are two jumper locations on the synchronous host circuit card, J3 and J2.

Use J3 to set the interrupt request line (IRQ) to a value of 3, 5, 9, 10, 11, 12, or 13 (Figure 5-52). The IRQ corresponds to the number below the pins. Figure 5-52 shows the card set with an IRQ of 3. See "Hardware Resource Allocator Operation" in Appendix A, "System Configuration".

NOTE:
If you are using IRQ 9, ensure that IRQ 2 is unused on your system.

J2 is preset at the factory. However, before you install the FIFO/SIB synchronous host circuit card, ensure that this jumper is set as shown in Figure 5-52.

NOTE:
When operating at 64 kbaud, this setting supports a maximum cable length of 15 ft.

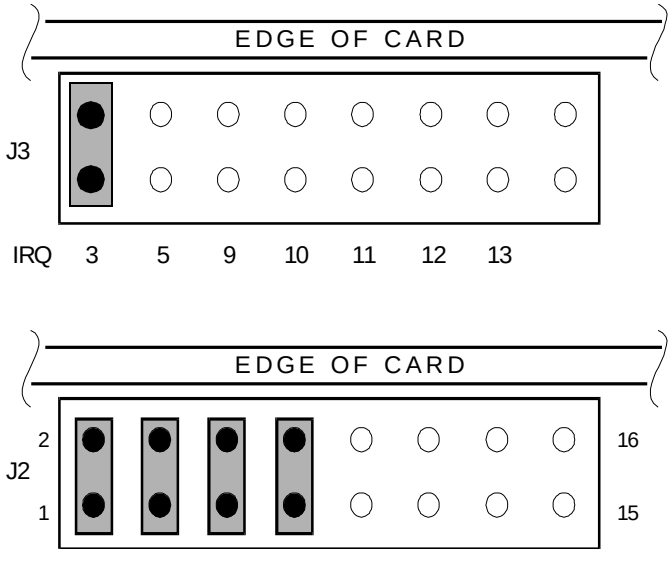

Figure 5-52. Jumper Settings for the FIFO/SIB Synchronous Host Circuit Card

Switch Settings

Figure 5-51 shows the location of the I/O switch block SW1. Figure 5-53 shows the I/O switch settings for an address of 380.

Base I/O address = 380 Hex

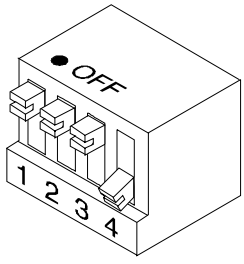

All switches closed or OFF

NOTE: Switch 4 is not used.

Figure 5-53. Switch Settings for the FIFO/SIB Synchronous Host Circuit Card

Table 5-5 shows the switch settings for other potential I/O addresses.

Table 5-5. FIFO/SIB Switch Settings

	Switch		
I/O Address	**1**	**2**	**3**
250	On	On	Off
260	Off	Off	On
2B0	On	Off	On
2E0	Off	On	On
380 (default)	Off	Off	Off
3A0	On	Off	Off
3E0	Off	On	Off
Disabled	On	On	On

Standard Circuit Cards

WARNING:

Observe proper electrostatic discharge precautions when you handle computer components. Wear an antistatic wrist strap that touches your bare skin and connect the strap cable to an earth ground. See "Protecting against Damage from Electrostatic Discharge" in Chapter 4, "Getting Inside the Computer," for detailed electrostatic discharge precautions.

This section provides the following information on the standard circuit cards that are included with every MAP/100P:

- Switch and jumper settings
- Other installation requirements that are specific to the particular circuit card you are installing

P5 200 MHz CPU Circuit Card

The P5 200 MHz CPU is packaged on a single PC/AT-compatible circuit card (Figure 5-54) that plugs into the backplane. There is one P5 200 MHz CPU circuit card installed in the MAP/100P.

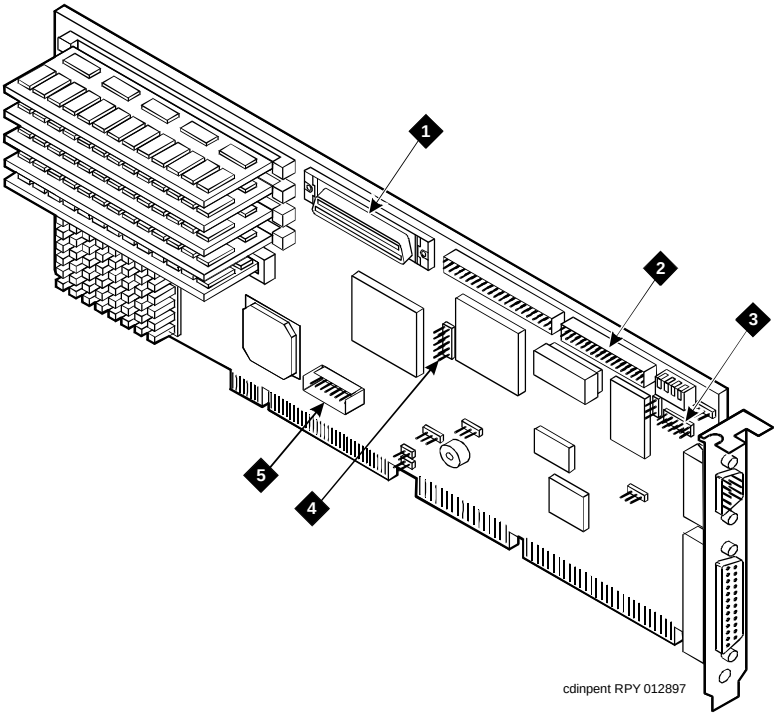

1. SCSI cable connector
2. Diskette cable connector
3. COM2 cable connector
4. Mouse cable connector
5. Keyboard cable connector

Figure 5-54. P5 200 MHz CPU Circuit Card

Setting the Resource Options

The resource options for the P5 200 MHz CPU circuit card are set by jumpers and switches.

Jumper Settings

The P5 200 MHz CPU card has jumpers that you must verify before you install the circuit card (Figure 5-55).

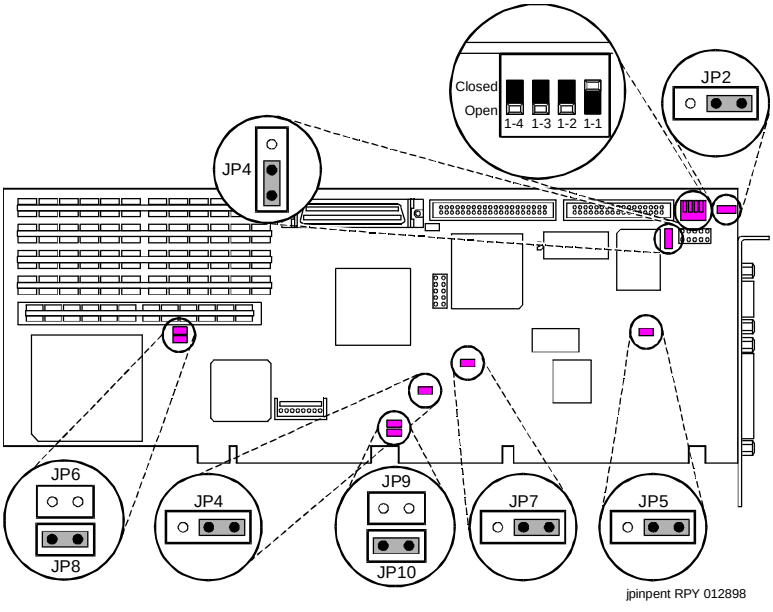

Figure 5-55. P5 200 MHz CPU Circuit Card Jumper and Switch Settings

Switch Settings

The P5 200 MHz CPU card has switches that you must set before you install the circuit card (Figure 5-55).

Placing the P5 200 MHz CPU Circuit Card in the MAP/100P

To place the P5 200 MHz CPU circuit card in the MAP/100P, do the following:

1. Remove the incoming power. See "Removing Power from the MAP/100P", in Chapter 4, "Getting Inside the Computer", for this procedure.
2. Access the circuit card cage. See "Accessing the Circuit Card Cage", in Chapter 4, "Getting Inside the Computer", for the procedure.
3. Remove the video controller card from Slot 18. See "Removing a Circuit Card" above for the procedure.
4. Attach the SCSI cable adapter to the P5 200 MHz CPU circuit card (Figure 5-56).

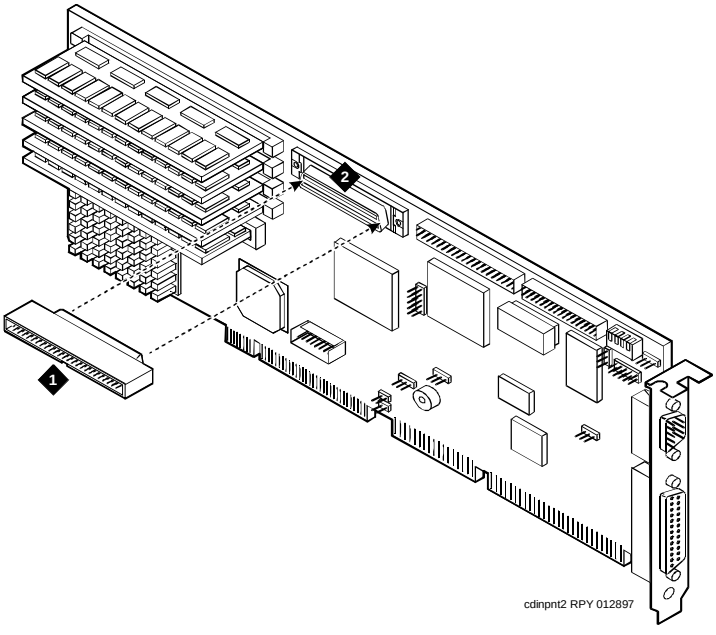

1. SCSI cable adapter
2. SCSI cable connector

Figure 5-56. Attaching the SCSI Cable Adapter

5. Complete Step 1 and Step 2 in "Installing a Circuit Card" above.
6. Attach the keyboard cable to the keyboard pins on the P5 200 MHz CPU circuit card. See "Installing the Remote Maintenance Circuit Card Interface Cable" in Chapter 7, "Replacing Other Components", for the procedure.
7. Complete Step 3 under "Installing a Circuit Card" above.

   NOTE:
   Place the P5 200 MHz CPU circuit card in Slot 17.

8. Attach the disk activity cable to the P5 200 MHz CPU circuit card with the red lead toward the back of the MAP/100P.
9. Install the rear COM2 cable to the P5 200 MHz CPU circuit card. See "Installing the Remote Maintenance Circuit Card Interface Cable" in Chapter 7, "Replacing Other Components", for the procedure.
10. Attach the SCSI cable to the SCSI controller pins on the P5 200 MHz CPU circuit card. See "Installing the SCSI Cable" in Chapter 7, "Replacing Other Components", for the procedure.

NOTE:
The SCSI cable has a label which contains the following message:

H600-449 6() ISS. ()
MAP/100P SCSI CA
(SCSI/( ) -P5/100)

NOTE:
The SCSI cable will be routed over top of the disk activity cable.

11. Attach the diskette drive cable to the diskette drive cable pins on the P5 200 MHz CPU circuit card. See "Installing the Diskette Cable" in Chapter 7, "Replacing Other Components", for the procedure.

NOTE:
The diskette drive cable has a label which contains the following message:

H600-449 6() ISS. ()
MAP/100 Floppy CA
(Floppy/( ) -P5/100)

12. Replace the video controller circuit card in Slot 18. See "Installing a Circuit Card" below for the procedure.
13. Complete Step 4 through Step 10 under "Installing a Circuit Card".

Verifying the Parameter Settings

P5 200 MHz CPU circuit card parameter settings are pre-loaded into each card. To verify these settings, do the following.

Host Adapter Parameter Settings

CAUTION:
Do not change the settings if there is a mismatch. Contact your remote maintenance center for assistance.

1. Reboot the system. See "Shutting Down and Rebooting the Lucent INTUITY System" in Chapter 3, "Common System Procedures," for the procedure.
2. After the power on self test (POST) but before the system boots, press CONTROL + A when prompted.

   The system displays the Host Adapter Configuration screen (Figure 5-57).

```
Would you like to configure the Host Adapter, or run the SCSI disk
utilities?  Select the option and press <Enter>.  Press <F5> to switch
between color and monochrome modes.

                                Options
                Configure/View Host Adapter Settings
                          SCSI Disk Utilities
```

Figure 5-57. Host Adapter Configuration Screen

3. Place the cursor on `Configure/View Host Adapter Settings`. Use the up ▲ and down ▼ arrows to move the cursor.
4. Press ENTER.
5. Compare the settings shown on the screen with the parameters listed in Table 5-6.

Table 5-6. SCSI Bus Interface Definitions

Option	Setting
Host Adapter SCSI ID	7
SCSI Parity Checking	Enabled
Host Adapter SCSI Termination	Low ON/High ON

6. Place the cursor on `Boot Device Options`. Use the up ▲ and down ▼ arrows to move the cursor.
7. Press ENTER.

   Compare the settings shown on the screen with the correct parameters listed in Table 5-7.

Table 5-7. Boot Device Options

Option	Setting
`Boot Target ID`	`0`
`Boot Lun Number`	`0`

8. Press (ESC).

   The system displays the SCSI bus interface definitions screen.

9. Place the cursor on `SCSI Device Configuration`. Use the up (▲) and down (▼) arrows to move the cursor.

10. Press (ENTER).

    Compare the settings shown on the screen with the correct parameters listed in Table 5-8.

    NOTE:
    These settings must be applied to all SCSI IDs (0 – 7) shown.

Table 5-8. SCSI Device Configuration

Option	Setting
`Initiate Sync Negotiation`	`Yes`
`Maximum Sync Transfer Rate`	`20.0`
`Enable Disconnection`	`Yes`
`Initiate Wide Negotiation`	`Yes`
`Send Start Unit Command`	`No`

11. Press (ESC).

    The system displays the SCSI bus interface definitions screen.

12. Place the cursor on `Advanced Configuration Options`. Use the up (▲) and down (▼) arrows to move the cursor.

13. Press (ENTER).

    Compare the settings shown on the screen with the correct parameters listed in Table 5-9.

Table 5-9. Advanced Configuration Options

Option	Setting
Host Adapter BIOS	Enabled
Support Removable Disks	Boot Only
Extended BIOS Translation	Disabled
Display <Ctrl-A> Message	Enabled
Multiple Lun Support	Disabled
BIOS Support for More	Enabled

14. Press (ESC).

    The system displays the SCSI bus interface definitions screen.

15. Press (ESC).

    The system displays the following message:

    ```
    Exit Utilities
        Yes
        No
    ```

16. Place the cursor on Yes. Use the up (▲) and down (▼) arrows to move the cursor.

17. Press (ENTER).

    The system displays the following message:

    ```
    Please press any key to reboot.
    ```

18. Press (ENTER).

    The system reboots and responds with the UNIX prompt (#).

You have completed verifying the Host Adapter settings.

CMOS Parameter Settings

CAUTION:
Do not change the settings if there is a mismatch. Contact your local technical support representative for assistance.

1. Perform a hard reboot of the system. See “Rebooting the UNIX System” in Chapter 3, “Common System Procedures,” for the procedure.

NOTE:
You must perform a hard reboot to access the CMOS parameter settings.

2. During the POST, press S.

   The system displays the following message:

   `Please standby for SETUP Utility...`

   After the system has installed the BIOS it displays the CMOS basic options set-up menu.

3. Compare the P5 120 MHz CPU circuit card settings in the setup menu with the default parameters listed in Table 5-10.

NOTE:
The settings in Table 5-10 may differ from the default parameters due to other equipped feature circuit cards in your system.

Table 5-10. CMOS Basic Option Settings for the P5 200 MHz CPU Circuit Card

Option	Setting
Time and Date	
Set the time and date to the current time and date.	
Floppy Disks	
Floppy Controller	Enabled
Select Drive A: Type	3.5 Inch, 1.44 MB
Select Drive B: Type	Not Installed
Floppy Seek during POST	Enabled
Fixed Disks	
IDE Controller Setup	Disabled
Auto Detect IDE Drives	Enabled
Set Hard Disk (1 - 4) Type	
Large Disk DOS Compatible	Disabled
Keyboard	
Keyboard Typematic Sound	Enabled
Keyboard Typematic Delay	500 msec

Continued on next page

Table 5-10. CMOS Basic Option Settings for the P5 200 MHz CPU Circuit Card — *Continued*

Option	Setting
Keyboard Typematic Rate	15 chars/sec
Shadow RAM	
Shadow Select C000:0 32K	SHADOW
Shadow Select C800:0 12K	SHADOW
Shadow Select D400:0 2K	ROM
Shadow Select DC00:0 8K	ROM
Shadow Select E000:0 64K	SHADOW
Shadow Select F000:0 64K	SHADOW
Boot Options	
101-Key Keyboard Numlock at Boot	Enabled
Set Boot Drive Sequence	Diskette, Hard, CD-ROM Drives
Report POST Errors	Enabled
Quiet Boot Enable/Disable	Enabled
Password Edit	
Password Options	Disabled

4. To change the parameter settings, complete the following Steps a through d.
   a. Place the cursor on the appropriate heading. Use the up ▲ and down ▼ arrows to move the cursor.
   b. Press ENTER.
   c. Change the parameters. Use the up ▲ and down ▼ arrows to move the cursor.
   d. Press ENTER.
5. Place the cursor on Advanced Options.
6. Press ENTER.

   The system displays the CMOS advanced options set-up menu.

7. Compare the P5 120 MHz CPU circuit card settings in the set-up menu with the default parameters listed in Table 5-10.

NOTE:
The settings in Table 5-11 may differ from the default parameters due to other equipped feature circuit cards in your system.

Table 5-11. CMOS Advanced Option Settings for the P5 200 MHz CPU Circuit Card

Option	Setting
Serial Ports	
16550 Compatible UART 1:	03F8h, IRQ4
16550 Compatible UART 2:	02F8h, IRQ3
Parallel Ports	
Select Parallel Port Address:	0378h IRQ 7
Parallel Port Mode	AT Compatible
Redirection	
Select Redirection Destination	Disabled
Memory Cache	
External Cache	Enabled
Advanced Chipset	
DRAM Speed	70ns
DMA Alias	Disabled
ECC/Parity Configuration	ECC
Memory Gap Block Size	Disabled
Gap Reporting to OS	Enabled
I/O Recovery	
8 bit I/O Recovery Time	6.5 SYSCLK
16 bit I/O Recovery Time	6.5 SYSCLK
ISA Guaranteed Access Time	Disabled
Bus Speed	
ISA Bus Speed	PCI Clock / 4

Continued on next page

Table 5-11. CMOS Advanced Option Settings for the P5 200 MHz CPU Circuit Card — *Continued*

Option	Setting
Miscellaneous	
SPEAKER Configuration	Enabled
Watchdog Timer Delay:	1.2 sec
PS2 Mouse	
PS2MOUSE Configuration	Disabled

8. To change the parameter settings, complete the following Steps a through d.
   a. Place the cursor on the appropriate heading. Use the up ▲ and down ▼ arrows to move the cursor.
   b. Press ENTER.
   c. Change the parameters. Use the up ▲ and down ▼ arrows to move the cursor.
   d. Press ENTER.
9. Place the cursor on PCI Options.
10. Press ENTER.

    The system displays the CMOS PCI options set-up menu.
11. Compare the P5 200 MHz CPU circuit card settings in the set-up menu with the default parameters listed in Table 5-12.

NOTE:
The settings in Table 5-12 may differ from the default parameters due to other equipped feature circuit cards in your system.

Table 5-12. CMOS PCI Option Settings for the P5 200 MHz CPU Circuit Card

Option	Setting
IRQs Setup	
PCI IRQ Line1	IRQ14
PCI IRQ Line2	IRQ14
PCI IRQ Line3	IRQ10
PCI IRQ Line4	IRQ10
PCI Devices	
0x8086/0x1250 Bridge-Host	No IRQ
0x9004/0x7078 MassStorage-SCSI	INTA->IRQ14
0x8086/0x7000 Bridge-ISA	No IRQ
0x8086/0x7010 MassStorage-IDE	No IRQ
0x5333/0x8A01 Display-VGA	INTA->IRQ14
0x1011/0x0014 Network-Ethernet	INTA->IRQ10
0x1011/0x0014 Network-Ethernet	INTA->IRQ10
Onboard SCSI	
Onboard PCI SCSI	Enabled

12. Place the cursor on `Basic Options`.
13. Press (ENTER).

    The system displays the CMOS basic options set-up menu.
14. Place the cursor on `Flash It!`.
15. Press (ENTER).

    The system displays the following message.

    ```
    Make Settings Permanent
            Yes
            No
    ```
16. Place the cursor on `Yes`.

17. Press (ENTER).

    The system displays the following message.

    `Reset in progress.`

    After approximately three minutes, the system reboots and displays the UNIX prompt (#).

Video Controller Circuit Cards

Figure 5-58 shows the PCI video controller circuit card.

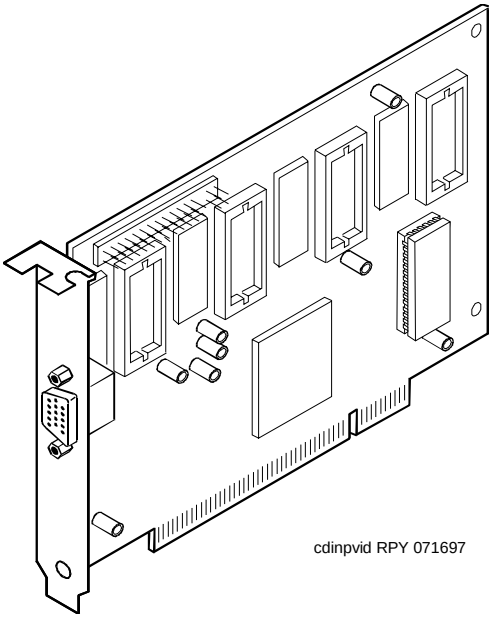

Figure 5-58. PCI Video Controller Circuit Card

There are no jumpers to set on the PCI video circuit card.

Remote Maintenance Circuit Card

The remote maintenance circuit card provides remote diagnostics of basic components (Figure 5-59). There is one remote maintenance circuit card installed on the system.

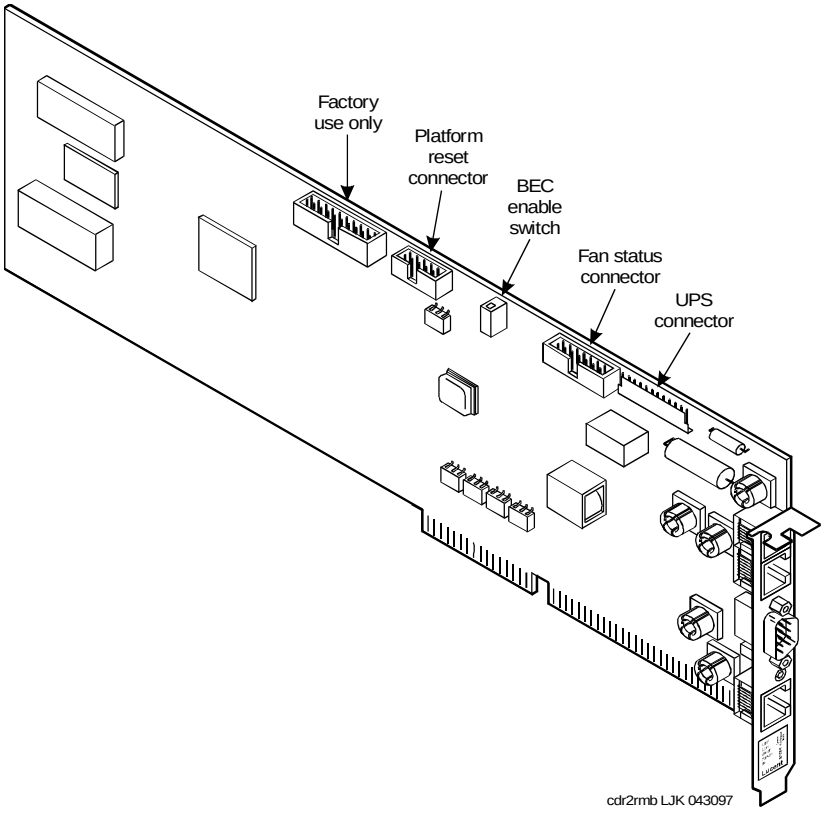

Figure 5-59. Remote Maintenance Circuit Card

Types of Remote Maintenance Circuit Cards

The Lucent INTUITY system supports remote maintenance circuit cards:

- With an internal modem (AYC54)
- Without an internal modem (AYC55)

You can determine the type of remote maintenance circuit card installed on you system by viewing the faceplate. Figure 5-60 shows the faceplate of a remote maintenance circuit card with an internal modem (AYC54).

NOTE:
The AYC54 remote maintenance circuit card can be connected to an external modem.

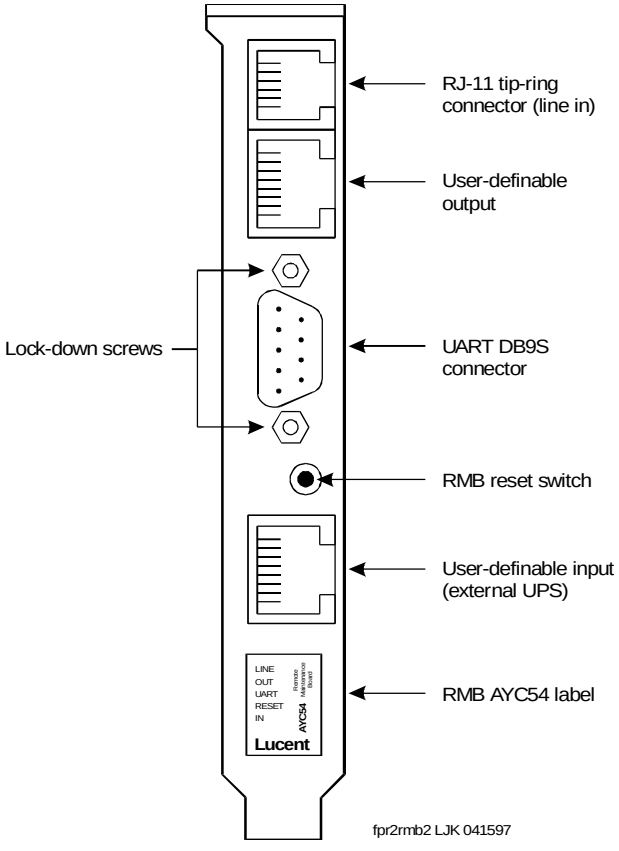

Figure 5-60. AYC54 Remote Maintenance Circuit Card Faceplate

Figure 5-61 shows the faceplate of a remote maintenance circuit card without an internal modem (AYC55).

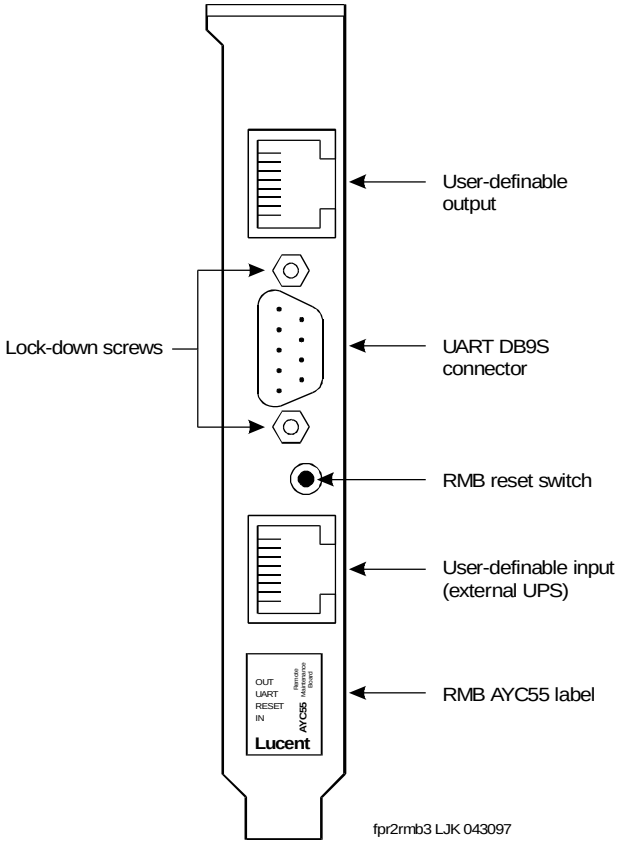

Figure 5-61. AYC55 Remote Maintenance Circuit Card Faceplate

Setting the Resource Options

The remote maintenance circuit card is equipped with a BEC enable switch (Figure 5-59). Ensure that this switch is set to the ON position (Figure 5-62).

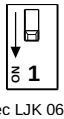

swr2bec LJK 063097

Figure 5-62. BEC Enable Switch

Inserting the Remote Maintenance Circuit Card

To insert the remote maintenance circuit card, do the following:

1. Complete the steps in "Installing a Circuit Card", above.
2. Connect the remote maintenance circuit card interface cable to the P5 200 MHz CPU circuit card. See "Installing the Remote Maintenance Circuit Card Interface Cable" in Chapter 7, "Replacing Other Components", for the procedure.

Installing the Remote Maintenance Circuit Card Software Package

To install the remote maintenance circuit card software package, do the following:

1. Stop the voice system.
2. Enter **pkgadd -d ctape1**

   The system displays the following message:

   ```
   Insert a cartridge into Tape Drive 1.
   Type [go] when ready,
       or [q] to quit: (default:go)
   ```

3. Insert the tape labeled "RMB Software Set" into the tape drive.
4. Press (ENTER).

   The system displays the following message:

   ```
   Installation in progress. Do not remote the cartridge
   tape.

   The following sets are available:
       1    RMBset   INTUITY RMB V2 Set
                    (i486)

   Select package(s) you wish to process (or 'all' to
   process all packages). (default: all) [?,??,q]
   ```

5. Press (ENTER).

   The system displays the following message:

   ```
   Processing:

   Set: RMB Software Set R2.0 (RMBset) from <ctape1>.

   Intuity RMB Software Set R2.0
   (i486)
   Using </> as the package base directory.

   The RMB BEC ADDR has been defaulted to D1000

   As is typical, should the RMB use COM1, rather than COM2
   (default:y) [y,n,?]:
   ```

6. If the remote maintenance circuit card should use COM1, press [ENTER].

   If the remote maintenance circuit card should use COM2, enter **n**

   The system displays the following message:

```
Please select the country code:

    01 - United States
    02 - International


Country code [01]:
```

7. Enter the appropriate code.

   The system displays the following message:

```
Insert a cartridge into Tape Drive 1.
Type [go] when ready
    or [q] to quit: (default: go)
```

8. Enter **q**

9. Remove the cartridge tape.

Replacing the Hard Disk Drive

6

Overview

This chapter describes:

- Identifying a failed hard disk drive
- Hardware procedures for replacing a hard disk drive
- Software procedures for preparing the system for a new hard disk drive
- Software procedures for initializing a hard disk drive

Purpose

The purpose of this chapter is to ensure that hard disk drives are installed in the proper manner.

Identifying a Failed Hard Disk Drive

Before a hard disk drive can be replaced you must identify which drive has failed. This section details how to identify a failed hard disk drive in INTUITY™ CONVERSANT® systems with two hard disk drives (both mirrored and unmirrored).

NOTE:
If your system is configured with only one hard disk drive, see "Software and Hardware Procedures for Replacing Hard Disk Drive 0 (Nonmirrored System)" for the procedure.

Hard Disk Drive Contents

To determine which hard disk drive has failed, you must know what type of information is stored on each drive. Table 6-1 shows the information contained on each hard disk drive in a nonmirrored system.

Table 6-1. Nonmirrored Hard Disk Drive Contents

Disk	Contents
Hard Disk Drive 0 SCSI ID 00 Bay 0	UNIX operating system, all INTUITY CONVERSANT software, system data, and speech/voice storage
Hard Disk Drive 1 SCSI ID 01 Bay 1	Speech/voice storage
Hard Disk Drive 2 SCSI ID 02 Bay 2	Speech/voice storage
Hard Disk Drive 3 SCSI ID 03 Bay 3	Speech/voice storage
Hard Disk Drive 4 SCSI ID 04 Bay 4	Speech/voice storage
Hard Disk Drive 5 SCSI ID 05 Bay 5	Speech/voice storage

NOTE:
The contents for Hard Disk Drive 0 are identical in nonmirrored and single-disk systems.

Table 6-2 show the information contained on each hard disk drive in a mirrored system.

Table 6-2. Mirrored Hard Disk Drive Contents

Disk	Contents
Hard Disk Drive 0 SCSI ID 00 Bay 0	UNIX operating system, all INTUITY software, system data, and speech/voice storage
Hard Disk Drive 1 SCSI ID 01 Bay 1	UNIX operating system, all INTUITY software, system data, and speech/voice storage
Hard Disk Drive 2 SCSI ID 02 Bay 2	Speech/voice storage
Hard Disk Drive 3 SCSI ID 03 Bay 3	Speech/voice storage
Hard Disk Drive 4 SCSI ID 04 Bay 4	Speech/voice storage
Hard Disk Drive 5 SCSI ID 05 Bay 5	Speech/voice storage

Identifying a Hard Disk Drive 0 Failure in a Nonmirrored or Single-Disk System

Because Hard Disk Drive 0 contains the only copy of the operating software in a nonmirrored or single-disk system, a failure of this drive results in a complete failure of the system. If this occurs you cannot reboot the system. See “Replacing Hard Disk Drive 0 (Nonmirrored System)” for the replacement procedure.

Identifying a Speech Storage Hard Disk Drive Failure in a Nonmirrored System

In a nonmirrored system all hard disk drives, with the exception of Hard Disk Drive 0, contain speech and voice storage. If a hard disk drive used to store speech fails, speech is lost. In the event of such a failure, the system displays the following message:

If this message appears on the screen, contact your remote maintenance center.

```
WARNING:    Disk Driver: HA0 TC0 LUX - Check Condition
```

NOTE:
The number after LU is the SCSI ID of the failed hard disk drive.

Identifying a Hard Disk Drive Failure in a Mirrored System

In a mirrored system the contents of each hard disk drive is mirrored to another hard disk drive in the system. As a result, if a hard disk drive fails the mirrored hard disk drive will continue to operate the system. There will be no noticeable difference in service. A hard disk drive failure will be identified by the message discussed in "Identifying a Speech Storage Hard Disk Drive Failure in a Nonmirrored System."

The number preceded by LU, in the message, is the SCSI ID of the failed hard disk drive. If this message appears on the screen, contact your remote maintenance center.

Hardware Procedures for Replacing a Hard Disk Drive

The following procedures detail removing and installing a hard disk drive in the MAP/100P. Figure 6-1 shows the positions of the hard disk drives.

WARNING:
Observe proper electrostatic discharge precautions when you handle computer components. Wear an antistatic wrist strap that touches your bare skin and connect the strap cable to an earth ground. See "Protecting against Damage from Electrostatic Discharge" in Chapter 4, "Getting Inside the Computer," for the procedure.

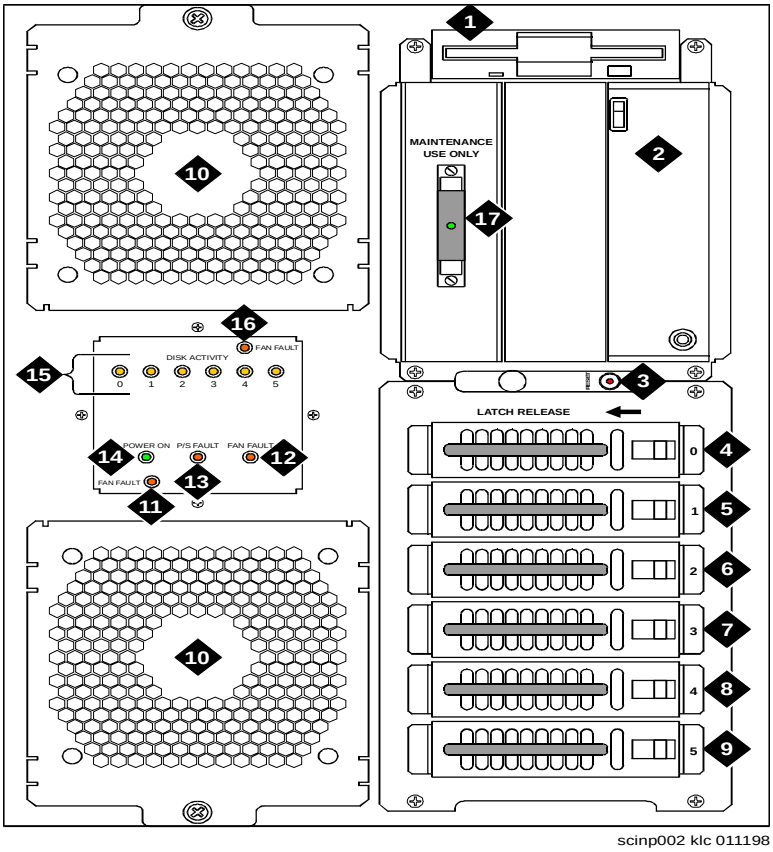

1. Diskette drive
2. Cartridge tape drive
3. Reset push button
4. Hard Disk Drive 0
5. Hard Disk Drive 1
6. Hard Disk Drive 2
7 Hard Disk Drive 3
8. Hard Disk Drive 4
9. Hard Disk Drive 5
10. Circuit card cage fan
11. Fan fault LED
12. Fan fault LED
13. Power supply fault LED
14. Power On LED
15. Hard disk drive activity LEDs
16. Fan fault LED
17. SCSI terminator

Figure 6-1. Front View of the MAP/100P

Removing a Hard Disk Drive

To remove a hard disk drive, do the following:

1. Verify that the replacement equipment is on site and appears to be in usable condition, with no obvious shipping damage.
2. If the system is in service, complete the following Steps a through c:
   a. Stop the voice system. See "Stopping the Voice System" in Chapter 3, "Common System Procedures," for the procedure.
   b. Shut down the voice system. See "Shutting Down the Voice System" in Chapter 3, "Common System Procedures," for the procedure.
   c. Shut down the operating system. See "Shutting Down the Operating System" in Chapter 3, "Common System Procedures," for the procedure.
3. Remove power from the MAP/100P. See "Removing Power from the MAP/100P" in Chapter 4, "Getting Inside the Computer," for the procedure.
4. Open the front door of the MAP/100P (Figure 6-2).

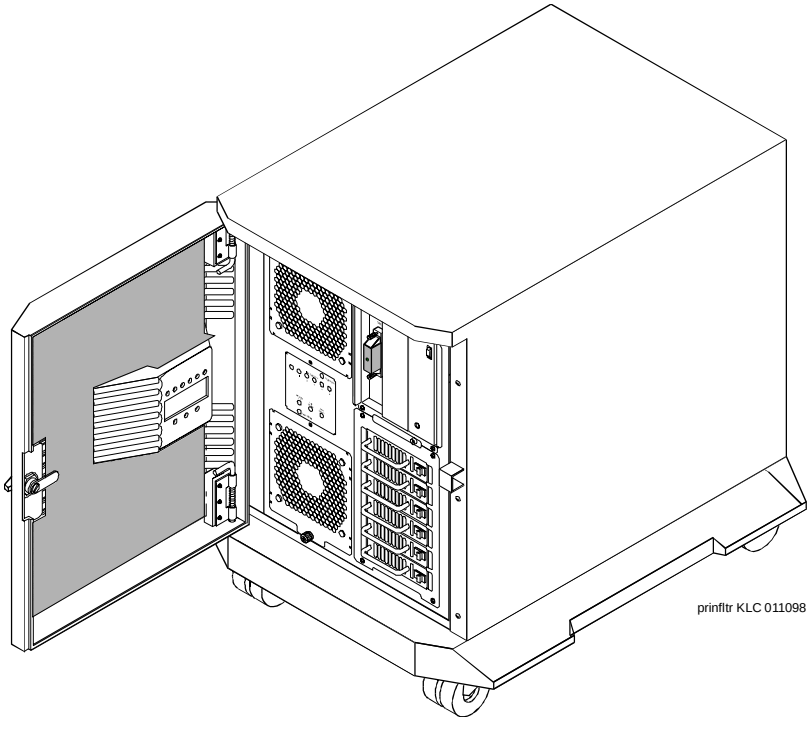

Figure 6-2. MAP/100P with Front Door Open

5. Remove the appropriate hard disk drive assembly by pressing the thumb tab toward the handle and pulling out on the assembly.

   See Table 6-1 and Table 6-2 for the location of the hard disk drives.

6. Remove the four screws that hold the hard disk drive to the assembly bracket (Figure 6-3).

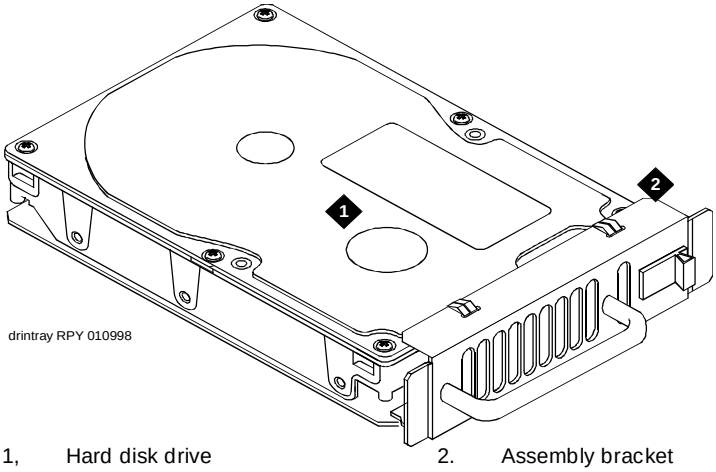

1, Hard disk drive 2. Assembly bracket

Figure 6-3. Hard Disk Drive Assembly

7. Remove the hard disk drive from the assembly bracket.
8. Place the defective hard disk drive upside down, with the circuit board facing up, on an ESD-protected surface.

Mounting a Hard Disk Drive in the MAP/100P

To mount the hard disk drive in the MAP/100P, do the following:

1. Attach the new hard disk drive to the assembly bracket using the four screws provided with the drive (Figure 6-3).

   CAUTION:
   Use only flat head screws to attach the hard disk drive to the drive assembly. The assembly will not fit in the MAP/100P with any other type of screw.

2. Align the hard disk drive assembly with the appropriate slot in the MAP/100P.
3. Press the thumb tab on the assembly bracket toward the bracket handle.

4. Slide the hard disk drive assembly in the MAP/100P.

   NOTE:
   The thumb tab should snap into place when the hard disk drive assembly has been fully installed in the MAP/100P. If the thumb tab does not snap into place, press the thumb tab to the right.

5. Release the thumb tab.
6. Close the front door of the MAP/100P.
7. Apply power to the unit. See "Restoring Power to the MAP/100P" in Chapter 4, "Getting Inside the Computer," for the procedure.

Replacing Hard Disk Drive 0

The following sections list the procedures for replacing Hard Disk Drive 0 in existing mirrored and nonmirrored.

Replacing Hard Disk Drive 0 (Nonmirrored System)

Hard Disk Drive 0 contains the base system software. Therefore, if this disk fails on a nonmirrored system, you must reinstall the entire INTUITY CONVERSANT system after you replace the hard disk drive.

Replacing the Hard Disk Drive

To replace a hard disk drive, do the following:

CAUTION:
The hard disk drives on the MAP/100P are not hot-swapable. The system must be removed from service prior to removing a hard disk drive.

1. Shut down the system. See "Shutting Down the Operating System", in Chapter 3, "Common System Procedures".
2. Remove the hard disk drive from the system. See "Hardware Procedures for Replacing a Hard Disk Drive" above for the procedure.
3. Remove the hard disk drive from the mounting bracket. See "Hardware Procedures for Replacing a Hard Disk Drive" above for the procedure.
4. Place the replacement hard disk drive on the mounting bracket. See "Hardware Procedures for Replacing a Hard Disk Drive" above for the procedure.
5. Place the hard disk drive assembly in the MAP/100P. See "Hardware Procedures for Replacing a Hard Disk Drive" above for the procedure.

Restoring the INTUITY CONVERSANT System

WARNING:
After installing a 2-Gbyte hard disk drive into a system as Disk 0, ***DO NOT ATTEMPT TO INSTALL AN OLDER VERSION OF UnixWare****. The only compatible version of the operating system tape contains the phrase "Independent Image." If the operating system tape does not contain this phrase, notify the remote maintenance center immediately.*

To reinstall the INTUITY CONVERSANT system software, do the following:

1. Restore the system using the INTUITY CONVERSANT image tape created using the **mkimage** command. See "Performing a System Restoration" in Chapter 3, "Common System Procedures," for the procedure.
2. Restore the speech files using the **spres** command. See *INTUITY™ CONVERSANT® Version 6.0 Application Development with Script Builder*, 585-310-760.

Replacing Hard Disk Drive 0 (Mirrored System)

The following procedure explains how to replace Hard Disk Drive 0 on a mirrored system.

NOTE:
If Hard Disk Drive 0 fails in a mirrored system, the system is still operational and there is no noticeable degradation of service.

CAUTION:
This initial synchronization of data on a mirrored system can degrade service, depending on system load. Therefore, perform this procedure only during off-peak hours.

To replace a hard disk drive, do the following:

CAUTION:
The hard disk drives on the MAP/100P are not hot-swapable. The system must be removed from service prior to removing a hard disk drive.

1. Shut down the system. See "Shutting Down the Operating System", in Chapter 3, "Common System Procedures".
2. Remove Hard Disk Drive 0 from the MAP/100P. See "Hardware Procedures for Replacing a Hard Disk Drive" above for the procedure.

   NOTE:
   Hard Disk Drive 0 is located in Hard Disk Drive Bay 0 (Figure 6-1).

3. Remove the hard disk drive from the mounting bracket. See "Hardware Procedures for Replacing a Hard Disk Drive" above for the procedure.
4. Place the replacement hard disk drive on the mounting bracket. See "Hardware Procedures for Replacing a Hard Disk Drive" above for the procedure.
5. Remove Hard Disk Drive 1 from the MAP/100P. See "Hardware Procedures for Replacing a Hard Disk Drive" above for the procedure.

   NOTE:
   Hard Disk Drive 1 is located in Hard Disk Drive Bay 1 (Figure 6-1).

   CAUTION:
   Do not remove Hard Disk Drive 1 from the mounting bracket.

6. Place Hard Disk Drive 1 in Hard Disk Drive Bay 0 (Figure 6-1).

   NOTE:
   This is the hard disk drive bay from which you removed Hard Disk Drive 0 in Step 2 above.

7. Place the new hard disk drive in Hard Disk Drive Bay 1. See "Hardware Procedures for Replacing a Hard Disk Drive" above for the procedure.
8. Reboot the system.

Replacing a Hard Disk Drive other than Drive 0

The following procedure explains how to replace a hard disk drive other than Hard Disk Drive 0 on an existing INTUITY CONVERSANT system.

NOTE:
If it is not possible to log in to the INTUITY CONVERSANT system, it is possible that Hard Disk Drive 0 has failed. In that case, see one of the "Replacing Hard Disk Drive 0" procedures (nonmirrored or mirrored, depending on your configuration) for instructions.

Software and Hardware Procedures for Replacing a Hard Disk Drive (Nonmirrored System)

The following procedure explains how to replace the defective hard disk drive on a nonmirrored system.

NOTE:
If a hard disk drive fails in a nonmirrored system, the system is still operational. However, speech files are lost.

Replacing the Hard Disk Drive

To replace a hard disk drive, do the following:

CAUTION:
The hard disk drives on the MAP/100P are not hot-swapable. The system must be removed from service prior to removing a hard disk drive.

1. Shut down the system. See "Shutting Down the Operating System", in Chapter 3, "Common System Procedures".
2. Remove the hard disk drive from the system. See "Hardware Procedures for Replacing a Hard Disk Drive" above for the procedure.
3. Remove the hard disk drive from the mounting bracket. See "Hardware Procedures for Replacing a Hard Disk Drive" above for the procedure.
4. Place the replacement hard disk drive on the mounting bracket. See "Hardware Procedures for Replacing a Hard Disk Drive" above for the procedure.
5. Place the hard disk drive assembly in the MAP/100P. See "Hardware Procedures for Replacing a Hard Disk Drive" above for the procedure.

Restoring the INTUITY CONVERSANT System

To restore the INTUITY CONVERSANT system, do the following:

1. Log in as root.
2. Enter **voldiskadm**

   The system displays the Volume Manager Support Operations screen (Figure 6-5).
3. Enter **list**

   The system displays the List Disk Information screen (Figure 6-4).

```
List Disk Information
Menu: VolumeManager/Disk/ListDisk

     Use this menu option to display a list of disks. You can
     also choose to list detailed information about the disk at
     a specific disk device address.

Enter disk device or “all” [<address>,all,q,?] (default:all)
```

Figure 6-4. List Disk Information Screen

4. Press (ENTER).

   The system displays a message similar to the following:

```
DEVICE      DISK        GROUP       STATUS
c0t0d0      disk01      rootdg      online
c0t1d0      disk02      rootdg      online
c0t2d0      disk03      speech      online
c0t4d0      disk04      speech      online
c0t5d0      disk05      speech      online
c0t6d0      disk06      speech      online
```

5. Record the device IDs and disk names in the following table.

Device	Disk

6. Press (ENTER).

   The system displays the Volume Manager Support Operations screen (Figure 6-5).

```
Volume Manager Support Operations
Menu: VolumeManager/Disk

 1        Add or initialize a disk
 2        Encapsulate a disk
 3        Remove a disk
 4        Remove a disk for replacement
 5        Replace a failed or removed disk
 6        Mirror volumes on a disk
 7        Move volumes from a disk
 8        Enable access to (import) a disk group
 9        Remove access to (deport) a disk group
 10       Enable (online) a disk device
 11       Disable (offline) a disk device
 list     List disk information

 ?        Display help about menu
 ??       Display help about menuing system
 q        Exit from menus

Select an operation to perform:
```

Figure 6-5. Volume Manager Support Operations Screen

7. Enter **3**

   The system displays the following message:

   `Enter the name of the disk to remove.`

8. Enter the disk name for the failed hard disk drive.

   The system displays the Volume Manager Support Operations screen (Figure 6-5).

9. Add a hard disk drive to the system. See "Adding a Hard Disk Drive to a System for Speech Storage" below for the procedure.

10. Restore the speech files using the **spres** command. See *INTUITY™ CONVERSANT® Version 6 Speech Development, Processing, and Recognition* for the procedure.

Software and Hardware Procedures for Replacing a Hard Disk Drive (Mirrored System)

The following procedure explains how to replace a hard disk drive on a mirrored system.

NOTE:
If a hard disk drive fails on a mirrored system, the system is still operational and there is no noticeable degradation of service.

CAUTION:
This initial synchronization of data on a mirrored system can degrade service, depending on system load. Therefore, perform this procedure only during off-peak hours.

Replacing the Hard Disk Drive

To replace a hard disk drive, do the following:

CAUTION:
The hard disk drives on the MAP/100P are not hot-swapable. The system must be removed from service prior to removing a hard disk drive.

1. Shut down the system. See "Shutting Down the Operating System", in Chapter 3, "Common System Procedures".

2. Remove the hard disk drive from the system. See "Hardware Procedures for Replacing a Hard Disk Drive" above for the procedure.

3. Remove the hard disk drive from the mounting bracket. See "Hardware Procedures for Replacing a Hard Disk Drive" above for the procedure.

4. Place the replacement hard disk drive on the mounting bracket. See "Hardware Procedures for Replacing a Hard Disk Drive" above for the procedure.

5. Place the hard disk drive assembly in the MAP/100P. See "Hardware Procedures for Replacing a Hard Disk Drive" above for the procedure.

Restoring the INTUITY CONVERSANT System

To restore the INTUITY CONVERSANT system, do the following:

1. Log in as root.
2. Enter **voldiskadm**

   The system displays the Volume Manager Support Operations screen (Figure 6-5).
3. Enter **list**

   The system displays the List Disk Information screen (Figure 6-4).
4. Press (ENTER).

   The system displays a message similar to the following:

```
DEVICE      DISK        GROUP       STATUS
c0t0d0      disk01      rootdg      online
c0t1d0      disk02      rootdg      online
c0t2d0      disk03      speech      online
c0t4d0      disk04      speech      online
c0t5d0      disk05      speech      online
c0t6d0      disk06      speech      online
```

5. Record the device IDs and disk names in the following table.

Device	Disk

6. Press (ENTER).

   The system displays the Volume Manager Support Operations screen (Figure 6-5).
7. Enter **4**

   The system displays the following message:

```
Enter the name of the disk to remove.
```

8. Enter the disk name for the drive with the device ID *c0t1d0*.

   NOTE:
   This should be disk01.

   The system displays the Volume Manager Support Operations screen (Figure 6-5).

9. Enter **5**

   The system displays the following message:

   `Enter the name of the disk to replace.`

10. Enter the same disk name as in Step 8.

    The system displays the following message:

    `Enter the device ID of the disk to use as a replacement.`

11. Enter **c0t0d0**

    The system displays the Hard Disk Partitioning - Disk 1 screen (Figure 6-6).

```
Total disk size is 2048 cylinders (2048.0MB)
```

Partition	Status	Type	Start	End	Length	%	Approx MB
1	Active	UNIX System	0	2047	2048	100	2048.0

```
SELECT ONE OF THE FOLLOWING

0. Overwrite system master boot code
1. Create a partition
2. Change Active (Boot from) partition
3. Delete a partition
4. Update (Update disk configuration and exit)
5. Exit (Exit without updating disk configuration)

Enter selection:
```

Figure 6-6. Hard Disk Partitioning – Disk 1 Screen

12. Enter **1**

    The system displays a screen where you must supply information for the new partition.

13. Select `UNIX System`. (Use ◄ and ► to move through the `Partition Type` field selections.)

14. Press TAB to move to the `Percentage of Disk` field.

15. Enter **100**

16. Press ▼ to move to the `Apply` box and press ENTER.

    The system displays the Hard Disk Partitioning - Disk 1 screen (Figure 6-6).

17. Enter **4**

    The system displays the Volume Manager Support Operations screen (Figure 6-5).

18. Enter **q**

    The system will start mirroring the contents of mirrored hard disk drive to the replacement hard disk drive. This will not interrupt normal operation of the INTUITY CONVERSANT system.

Adding a Hard Disk Drive

This section details the procedures for adding a second hard disk drive to an INTUITY CONVERSANT system which was supplied with only one hard disk drive. If you are replacing an existing drive see "Replacing Hard Disk Drive 0" or "Replacing a Hard Disk Drive other than Drive 0" for the procedure.

Adding a Hard Disk Drive to a System for Mirroring

To add a hard disk drive, do the following:

1. Install the new hard disk drive. See "Hardware Procedures for Replacing a Hard Disk Drive" for the procedure.
2. Clean the new hard disk drive. See "Cleaning a Hard Disk Drive" for the procedure.
3. Log in as root.
4. Enter **voldiskadm**

   The system displays the Volume Manager Support Operations screen (Figure 6-5).

5. Enter **1**

   The system displays the Add or Initialize a Disk screen (Figure 6-7).

```
Add or initialize a disk
Menu: VolumeManager/Disk/AddDisk

Use this operation to add a disk to a disk group. You can select an existing
disk group or create a new disk group. You can also initialize a disk
without adding it to a disk group, which leaves the disk available for use
as a replacement disk. This operation takes, as input, a disk device, for
example c0t2d0, a disk group (or none to leave the disk available for as
a replacement disk). If you are adding the disk to a disk group, you will
be asked to give a name to the disk.

Select disk device to add [<address>,list,q,?]
```

Figure 6-7. Add or Initialize a Disk Screen

6. Enter **list** to show a list of the disk devices recognized by the system.

   NOTE:
   The **list** command will show the newly added disk `online` or `error`, but not as part of any disk group. Choose this disk address for the next prompt.

   The system displays a message similar to the following message:

```
DEVICE      DISK        GROUP       STATUS
c0t0d0      disk01      rootdg      online
c0t1d0      -           -           online
```

7. Enter the device to add.

   The system displays the following message:

```
Disk device c0tXd0 appears to have been initialized
already.
The disk is currently available as a replacement disk.
```

   NOTE:
   If the disk is a brand new disk, the above message is not displayed. Sometimes the newly added disk `STATUS` is shown as `error` instead of `online`. This may happen until the disk is added to the Volume Manager internal configuration files using **voldiskadm**.

Do you wish to reinitialize c0t*X*d0?

8. Enter **y**

   The system displays the following message:

   ```
   You can choose to add this disk to an existing disk
   group, to create a new disk group, or you can choose to
   leave the disk available for use by future add or
   replacement operations. To create a new disk group,
   select a disk group name that does not yet exist. To
   leave the disk available for future use, specify a disk
   group name of “none”.

   Which disk group [<group>,none,list,q,?] (default:
   rootdg)
   ```

9. Press (ENTER).

   The system displays the following message:

   ```
   You must now select a disk name for the disk. This disk
   name can be specified to disk removal, move, or
   replacement operations. If you move the disk, such as
   between host bus adapters, the disk will retain the
   same disk name, even though it will be accessed using a
   different disk device address name.

   Enter disk name [<name>,q,?] (default: disk02)
   ```

10. Enter the disk name.

    If you are adding Hard Disk Drive 0, enter **disk01**

    If you are adding Hard Disk Drive 1, enter **disk02**

    The system displays the following message:

    ```
    The requested operation is to initialize disk device
    c0tXd0 and to add this device to disk group rootdg as
    disk disk0X.

    Continue with operation? [y,n,q,?] (default: y)
    ```

11. Press (ENTER).

    The system displays the Initialize a Disk screen (Figure 6-8).

```
Initialize a disk
Menu: VolumeManager/Disk/AddDisk

The fdisk utility will now be invoked to allow you to select partitions
to be used for the DOS operating system, and one fdisk partition to use
for storing UNIX partitions. Please create exactly one partition with type
UNIX. If you wish to be able to boot UNIX on this disk, you must also make
the UNIX partition the active partition.


Continue?
```

Figure 6-8. Initialize a Disk Screen

12. Enter **y**

    The system displays the following message:

    `The recommended default partitioning for your disk is:`

    `a 100% “UNIX System” partition.`

    `To select this please type “y”. To partition your disk differently, type “n” and the “fdisk” program will let you select other partitions.`

13. Enter **y**

    After approximately 20 to 30 minutes the system will indicate that the procedure was successful.

14. Press (ENTER).

    The system displays the Volume Manager Support Operations screen (Figure 6-5).

15. Enter **q**

    The system displays the system prompt.

Adding a Hard Disk Drive to a System for Speech Storage

1. Complete "Adding a Hard Disk Drive to a System for Mirroring" above.
2. Log in to the system as root.
3. Enter **sysadm**

NOTE:
This procedure assumes that there is no file or directory named **/home3** on the system. If **/home3** exists, choose another unique name and substitute that name for /**home3** throughout the following procedure.

The system displays the UNIX System V Administration menu (Figure 6-9).

```
 1                    UNIX System V Administration
>backup_service    - Backup Scheduling, Setup and Control
 file_systems      - File System Creation, Checking and Mounting
 machine           - Machine Configuration, Display and Shutdown
 network_services  - Network Services Administration
 ports             - Port Access Services and Monitors
 preSVR4           - Peripherals Setup
 printers          - Printer Configuration and Services
 restore_service   - Restore From Backup Data
 schedule_task     - Schedule Automatic Task
 software          - Software Installation and Removal
 storage_devices   - Storage Device Operations and Definitions
 system_setup      - System Name, Date/Time and Initial Password Setup
 users             - User Login and Group Administration
 volume_mgmt       - VERITAS Volume Manager Administration
```

Figure 6-9. UNIX System V Administration Menu

4. Select

```
>volume_mgmt
  > Display Disks
    > disk02
```

The system displays the Display Disk <disk02> window (Figure 6-10).

```
4                    Display Disk disk01
Disk Name: disk01                  Status: online
Device Name: c0t1d0s0              Length: 4189696

 Volumes on disk disk01:
mtce
oracle
rootvol
standvol
swapvol
tmp
```

Figure 6-10. Display Disk Window

5. Record the value shown in the `Length` field on the line below.

Length:

6. Press F6 (Cancel) twice.

   The system displays the VERITAS Volume Manager menu (Figure 6-11).

```
2                        VERITAS Volume Manager
 Basic Disk Operations        - Add, remove, and modify disks
 Basic Filesystem Operations  - Create, remove, and modify file systems
 Basic Volume Operations      - Create, remove, and modify volumes
>Display Disks                - Show disks under Volume Manager control
 Display Volumes              - Display parameters of volumes
 Set Defaults                 - Set defaults for top down utilities
```

Figure 6-11. VERITAS Volume Manager Menu

7. Select

```
>Basic Volume Operations
```

```
> Create
```

   The system displays the Create Volumes window (Figure 6-12).

```
4                    Create Volumes
Volume Name:
Volume Length:
Number of mirrors:   2
Volume Layout:       concat


Logging Type:        None
Disk Group:          rootdg
Disk List:
disk01 disk02
```

Figure 6-12. Create Volumes Window

8. Enter **home3** in the `Volume Name:` field.
9. Enter the number you recorded in Step 5 in the `Volume Length:` field.
10. Enter **0** in the `Number of mirrors:` field.
11. Enter **concat noncontig** in the `Volume Layout:` field.
12. Enter **None** in the `Logging Type:` field.
13. Enter **rootdg** in the `Disk Group:` field.
14. Enter **disk02** in the `Disk List:` field.
15. Press F3 (Save).
16. Press F6 (Cancel).
17. Press F7 (Cmd-Menu).
18. Select

```
>Exit
```

    The system displays the UNIX prompt.

19. Enter **/sbin/mkfs -F vxfs -o C,bsize=8192 /dev/rvol/home3 <*number for length of disk from Step 5 above*>**

    The system displays the following message:

    `Mkfs: make vxfs file system?`

    `(DEL if wrong)`

20. Press ENTER.
21. Enter **cp /etc/vfstab /etc/vfstab.orig**

22. Add the following line to the file **/etc/vfstab**:

/dev/vol/home3 /dev/rvol/home3 /home3 vxfs 1 yes mincache=closesync

23. Enter **mkdir /home3**
24. Enter **mount /home3**
25. Enter **mkdir -p /home3/vfs/talkfiles**

NOTE:
There is a sysadm menu option for creating a filesystem, but we recommend that you do not use this menu option when creating large file systems.

You have completed the procedure for adding a hard disk drive.

Cleaning a Hard Disk Drive

There are two ways to clean a hard disk drive:

- Using an **fdisk** command
- Low-level formatting the hard disk drive

Using the fdisk Command

A hard disk drive that contains data cannot be installed in an INTUITY CONVERSANT system. The hard disk drive must be cleaned before use.

To use the **fdisk** command to clean a hard disk drive, do the following:

1. Log in to the system as root.
2. Enter **fdisk /dev/rdsk/c0t1d0s0**

CAUTION:
The phrase c0t1d0s0 is the name of the disk to be cleaned. The phrase c0t1d0s0 is correct for Hard Disk Drive 1. Hard Disk Drive 0 is named c0t0d0s0.

The system displays the Disk Cleaning Screen (Figure 6-13)

```
Total disk size is 2048 cylinders (2048.0MB)
```

Partition	Status	Type	Start	End	Length	%	Approx MB
1	Active	UNIX System	0	2047	2048	100	2048.0

```
SELECT ONE OF THE FOLLOWING

0. Overwrite system master boot code
1. Create a partition
2. Change Active (Boot from) partition
3. Delete a partition
4. Update (Update disk configuration and exit)
5. Exit (Exit without updating disk configuration)

Enter selection:
```

Figure 6-13. Disk Cleaning Screen

3. Enter **3**

   The system displays the following message:

   `Enter the number of the partition you want to delete (or enter x to exit)`

4. Enter the number of the partition.

   For the example shown in Figure 6-13, you would enter **1**

   The system displays the following message:

   `Do you want to delete partition X? This will erase all files and programs in this partition (type “y” or “n”).`

5. Enter **y**

   The system displays the following message:

   `Partition X has been deleted.`

   The system displays the Disk Cleaning Screen (Figure 6-13)

6. Enter **4**

   The system displays the following message:

   `If you have created or altered a partition, you must initialize the partition to reflect the new configuration. For a UNIX System partition run the`

`disksetup(1m)` command. For a DOS partition, run the DOS format command. Changes limited to the "Active" status field require no additional action.

7. Reboot the system. See "Rebooting the UNIX System" in Chapter 3, "Common System Procedures," for the procedure.

Low-Level Formatting the Hard Disk Drive

To low-level format a hard disk drive, do the following:

1. Reboot the system. See "Rebooting the UNIX System" in Chapter 3, "Common System Procedures," for the procedure.
2. Press CONTROL-A when prompted.

   The system displays the Host Adapter Configuration screen (Figure 6-14).

```
Would you like to configure the host adapter or run the SCSI disk
utilities? Select the option and press <Enter>. Press <F5> to switch
between color or monochrome.

                                Options
                   Configure/View Host Adapter Settings
                            SCSI Disk Utilities
```

Figure 6-14. Host Adapter Configuration Screen

3. Place the cursor on `SCSI Disk Utilities`. Use the up ▲ and down ▼ arrows to move the cursor.
4. Press ENTER.

   The system displays the SCSI Disk Utilities screen (Figure 6-15).

```
Select SCSI Disk and press <Enter>.

SCSI ID #0     IBM DORS-32160
SCSI ID #1     IBM DORS-32160
SCSI ID #2     No Device
SCSI ID #3     No Device
SCSI ID #4     No Device
SCSI ID #5     No Device
SCSI ID #6     TANDBERG TDC4200
SCSI ID #7     AIC - 7850
```

Figure 6-15. SCSI Disk Utilities Screen

5. Place the cursor on the SCSI Disk to be formatted. Use the up ▲ and down ▼ arrows to move the cursor.
6. Press ENTER.

   The system displays the Configure/Format Disk screen (Figure 6-16).

```
Configure Disk
 Format Disk
```

Figure 6-16. Configure/Format Disk Screen

7. Place the cursor on the `Format Disk`. Use the up ▲ and down ▼ arrows to move the cursor.
8. Press ENTER.

   The system will ask you to confirm that the disk is to be formatted.
9. Enter **y**

Mirroring

This section details procedures for establishing or removing mirroring on a two-disk INTUITY CONVERSANT system.

Establishing Mirroring

Establishing disk mirroring includes first copying data from the first disk to the second disk, then enabling mirroring so that the two disks continue to be in sync. When mirroring to another disk, make sure that the second disk is at least as large as the first one. If the second disk is larger, the additional space remains unused and may be used later if there is a need to grow a file system.

The following procedure shows the system entries and system responses when mirroring disk01 and disk02. If you are mirroring other disks, your responses will be different.

1. Set the jumpers on Hard Disk Drive 1. See "Hardware Procedures for Replacing a Hard Disk Drive" above for the procedure.
2. Place Hard Disk Drive 1 in Bay 3. See "Hardware Procedures for Replacing a Hard Disk Drive" above for the procedure.
3. Add Hard Disk Drive 1 to the system. See "Adding a Hard Disk Drive to a System for Mirroring" above for the procedure.
4. At the UNIX prompt, enter **voldiskadm**

   The system displays the Volume Manager Support Operations screen (Figure 6-5).
5. Enter **6**

   The system displays the Mirror Volumes on a Disk screen (Figure 6-17).

```
Mirror volumes on a disk
Menu: VolumeManager/Disk/Mirror

This operation can be used to mirror volumes on a disk. These volumes can
be mirrored onto another disk or onto any available disk space. Volumes
will not be mirrored if they are already mirrored. Also, volumes that are
comprised of more than one subdisk will not be mirrored.
Mirroring volumes from the boot disk will produce a disk that can be used
as an alternate boot disk.
At the prompt below, supply the name of the disk containing the volumes
to be mirrored.

Enter disk name
```

Figure 6-17. Mirror Volumes on a Disk Screen

6. Enter **list**

   The system displays the Disk Group screen (Figure 6-18).

```
Disk group: rootdg

DM   NAME   DEVICE     TYPE     PRIVLEN      PUBLEN         PUBPATH
dm disk00 c0t0d0s0   sliced      512        2422237    /dev/rdsk/c0t0d0se
dm disk00 c0t1d0s0   sliced      512        3448320    /dev/rdsk/c0t1d0se


Enter disk name
```

Figure 6-18. Disk Group Screen

7. Enter **disk00**

   The system displays the following message:

   ```
   You can choose to mirror volumes from disk disk00 onto
   any available disk space, or you can choose to mirror
   onto a specific disk. To mirror to a specific disk,
   select the name of that disk. To mirror to any available
   disk space, select “any”.

   Enter destination disk [<disk>,list,q,?] (default: any)
   ```

8. Enter **disk01**

   The system displays the following message:

   ```
   The requested operation is to mirror all volumes on
   disk disk00 in disk group rootdg onto available disk
   space on disk disk01.

   NOTE: This operation takes a long time to complete.

   (It will take approximately 20 minutes to mirror all
   volumes on a 2.0 Gbyte disk.)

   Continue with the operation?
   ```

9. Enter **y**

   The system displays the following message:

```
Mirror volume standvol
Mirror volume swapvol
Mirror volume rootvol
Disk disk01 is now bootable
Mirror volume mtce
Mirror volume oracle
Mirror volume tmp
Mirror volume vol
Mirror volume vs

Mirroring of disk disk01 is complete.

Mirror volumes on another disk?
```

10. Enter **n**

    The system displays the Volume Manager Support Operations screen (Figure 6-5).

11. Enter **q**

Removing Mirroring

To remove mirroring, do the following:

1. At the UNIX prompt, enter **sysadm**

   The system displays the UNIX System V Administration menu (Figure 6-9).

2. Select

```
>volume_mgmt
    > Basic Volume Operations
        > Remove Mirror
```

   The system displays the Remove Mirrors window (Figure 6-19).

```
4                          Remove Mirrors
Remove a Mirror from the Volume named:
Number of Mirrors currently on this Volume:
Press Choices to Select Mirrors to Remove
```

Figure 6-19. Remove Mirrors Window

3. Enter the name of the volume in the `Remove a Mirror from the Volume named:` field.
4. Place the cursor in the `Press Choices to Select Mirrors to Remove:` field.
5. Press F2 (Choices) to select from the menu.
6. Select **disk01**
7. Press F3 (Save).

Replacing Other Components

7

Overview

This chapter describes the procedures for replacing the:

- Backplanes
- Cables
- Cartridge tape drive
- Console alarm panel
- Diskette drive
- Fans
- Fan filter
- Fuse
- Hard disk drive carriage
- Memory modules
- Power supplies
- Remote maintenance circuit card interface board
- Terminator SIPs
- Tip/Ring distribution hardware

Purpose

The purpose of this chapter is to ensure that the correct procedures are used to replace the internal components of the MAP/100P. This chapter also provides information on the correct configuration and settings for the individual components.

Replacing Backplanes

This section details the replacement procedures for the following backplanes:

- Circuit card backplane
- Power supply backplane
- Hard disk drive carriage backplane

Replacing the Circuit Card Backplane

The circuit card backplane (Figure 7-1) is located in the back of the circuit card cage.

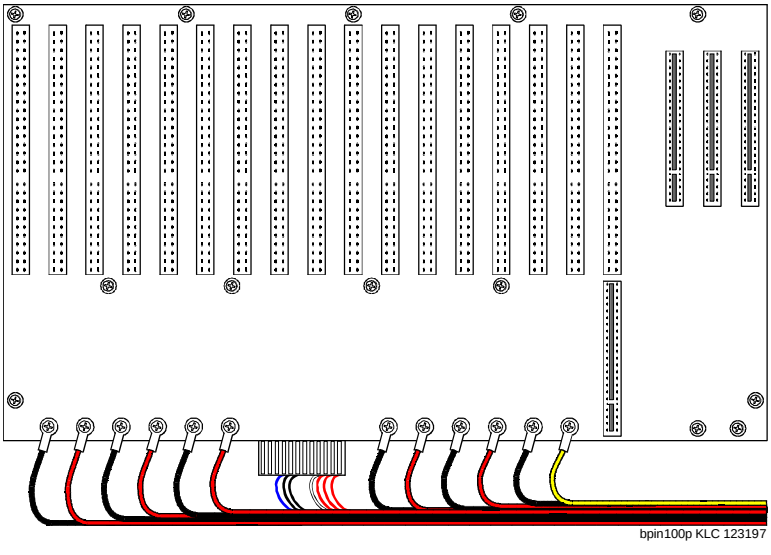

Figure 7-1. Circuit Card Backplane

Removing the Circuit Card Backplane

WARNING:

Observe proper electrostatic discharge precautions when you handle computer components. Wear an antistatic wrist strap that touches your bare skin and connect the strap cable to an earth ground. See "Protecting against Damage from Electrostatic Discharge", in Chapter 4, "Getting Inside the Computer".

To remove the circuit card backplane, do the following:

1. Verify that the replacement equipment is on site and appears to be in usable condition with no obvious shipping damage.
2. If the system is in service, perform the following steps.
   a. Stop the voice system. See "Stopping the Voice System," in Chapter 3, "Common System Procedures", for voice system administration.
   b. Shut down the voice system. See "Shutting Down the Voice System," in Chapter 3, "Common System Procedures", for voice system administration.
   c. Shut down the INTUITY CONVERSANT system. See "Shutting Down the Operating System," in Chapter 3, "Common System Procedures", for voice system administration.
3. Remove the incoming power. See "Removing Power from the MAP/100P", in Chapter 4, "Getting Inside the Computer", for this procedure.
4. Access the circuit card cage. See "Accessing the Circuit Card Cage", in Chapter 4, "Getting Inside the Computer", for the procedure.
5. Remove the circuit cards. See "Removing a Circuit Card", in Chapter 5, "Replacing, Installing, or Upgrading Circuit Cards", for the procedure.
6. Remove the 12 screws which hold the power supply wires to the circuit card backplane (Figure 7-1).
7. Remove the two power supply wire slide connectors from the circuit card backplane (Figure 7-1).
8. Remove the thirteen screws which secure the circuit card backplane to the MAP/100P (Figure 7-1).
9. Remove the circuit card backplane.

Installing the Circuit Card Backplane

WARNING:

Observe proper electrostatic discharge precautions when you handle computer components. Wear an antistatic wrist strap that touches your bare skin and connect the strap cable to an earth ground. See "Protecting against Damage from Electrostatic Discharge", in Chapter 4, "Getting Inside the Computer".

To install the circuit card backplane, do the following:

1. Place the circuit card backplane in the MAP/100P.
2. Secure the circuit card backplane using the thirteen screws removed in Step 8 of "Removing the Circuit Card Backplane", above.
3. Attach the two power supply wire slide connectors to the circuit card backplane (Figure 7-1).
4. Attach the 12 power supply wires to the circuit card backplane using the screws you removed in Step 6 of "Removing the Circuit Card Backplane", above.
5. Replace the circuit cards. See "Installing a Circuit Card", in Chapter 5, "Replacing, Installing, or Upgrading Circuit Cards", for the procedure.
6. Replace the dress cover. See "Replacing the Dress Cover", in Chapter 4, "Getting Inside the Computer", for the procedure.
7. Restore the incoming power. See "Restoring Power to the MAP/100P", in Chapter 4, "Getting Inside the Computer", for this procedure.

Replacing the Power Supply Backplane

The power supply backplane (Figure 7-2 and Figure 7-3) is located between the power supply bay and the peripheral bay.

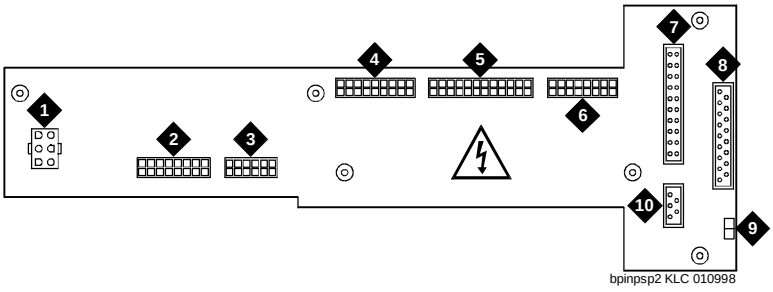

1. J1 - Power ON/OFF switch cable connection
2. J2 - Hard disk drive power cable connection
3. J3 - Circuit card backplane power cable connection
4. J4 - Future
5. J5 - Circuit card backplane power cable connection
6. J6 - Cartridge tape and diskette drive power supply cable connection
7. J8 - Console alarm cable connection
8. J9 - Remote maintenance circuit card interface cable connection
9. J10 - Reset cable connection
10. J7 - SCSI ID cable connection

Figure 7-2. Power Supply Backplane (showing peripheral bay connections)

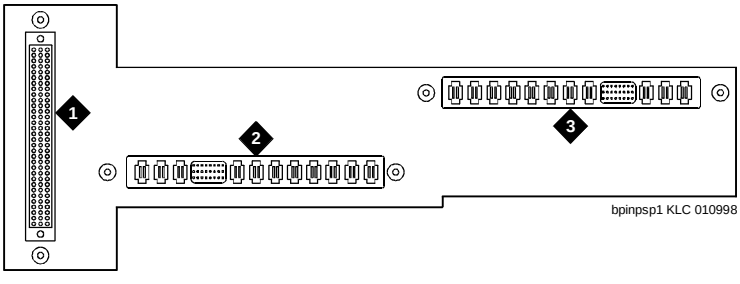

1. Remote maintenance circuit card interface board connection
2. Power supply connection
3. Power supply connection

Figure 7-3. Power Supply Backplane (showing power supply connections)

Removing the Power Supply Backplane

WARNING:

Observe proper electrostatic discharge precautions when you handle computer components. Wear an antistatic wrist strap that touches your bare skin and connect the strap cable to an earth ground. See "Protecting against Damage from Electrostatic Discharge", in Chapter 4, "Getting Inside the Computer".

To remove the power supply backplane, do the following:

1. Verify that the replacement equipment is on site and appears to be in usable condition with no obvious shipping damage.
2. If the system is in service, perform the following steps.
   a. Stop the voice system. See "Stopping the Voice System," in Chapter 3, "Common System Procedures", for voice system administration.
   b. Shut down the voice system. See "Shutting Down the Voice System," in Chapter 3, "Common System Procedures", for voice system administration.
   c. Shut down the INTUITY CONVERSANT system. See "Shutting Down the Operating System," in Chapter 3, "Common System Procedures", for voice system administration.
3. Remove the incoming power. See "Removing Power from the MAP/100P", in Chapter 4, "Getting Inside the Computer", for this procedure.
4. Remove the power supplies. See "Removing a Power Supply", for the procedure.
5. Remove the remote maintenance circuit card interface board. See "Removing the Remote Maintenance Circuit Card Interface Board", for the procedure.
6. Open the front door.
7. Remove the hard disk drive carriage. See "Removing the Hard Disk Drive Carriage", for the procedure.
8. Disconnect the following cables (Figure 7-2).
   - Power ON/OFF switch cable connection
   - Hard disk drive power cable connection
   - Circuit card backplane power cable connection
   - Diskette and tape drive power cable connection
   - Alarm cable connection
   - SCSI cable connection
   - Reset cable connection
   - Hard disk drive SCSI ID cable connection
9. Remove the six screws that secure the power supply backplane to the MAP/100P.
10. Pull the power supply backplane from the MAP/100P.

Installing the Power Supply Backplane

To install the power supply backplane, do the following:

1. Place the power supply backplane in the MAP/100P.
2. Secure the power supply backplane with the six screws you removed in Step 9 of "Removing the Power Supply Backplane".
3. Connect the following cables (Figure 7-2):
   - Power ON/OFF switch cable connection
   - Hard disk drive power cable connection
   - Circuit card backplane power cable connection
   - Diskette and tape drive power cable connection
   - Alarm cable connection
   - SCSI cable connection
   - Reset cable connection
   - Hard disk drive SCSI ID cable connection
4. Replace the hard disk drive carriage. See "Installing the Hard Disk Drive Carriage", for the procedure
5. Replace the remote maintenance circuit card interface board. See "Installing the Remote Maintenance Circuit Card Interface Board" for the procedure.
6. Replace the power supplies. See "Installing a Power Supply" for the procedure.
7. Close the front door.
8. Apply power to the MAP/100P. See "Restoring Power to the MAP/100P", in Chapter 4, "Getting Inside the Computer", for this procedure.

Replacing the Hard Disk Drive Carriage Backplane

The hard disk drive carriage backplane (Figure 7-4) is located in the back of the hard disk drive carriage (Figure 7-5).

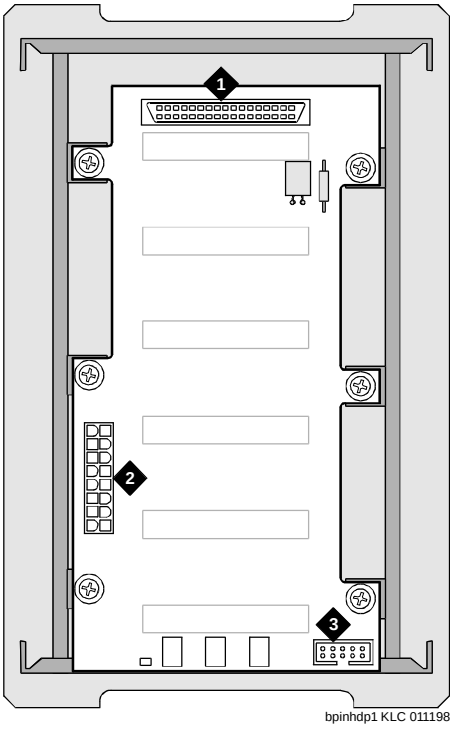

1. SCSI bus cable connection
2. Hard disk drive power cable connection
3. SCSI ID cable connection

Figure 7-4. Hard Disk Drive Carriage Backplane

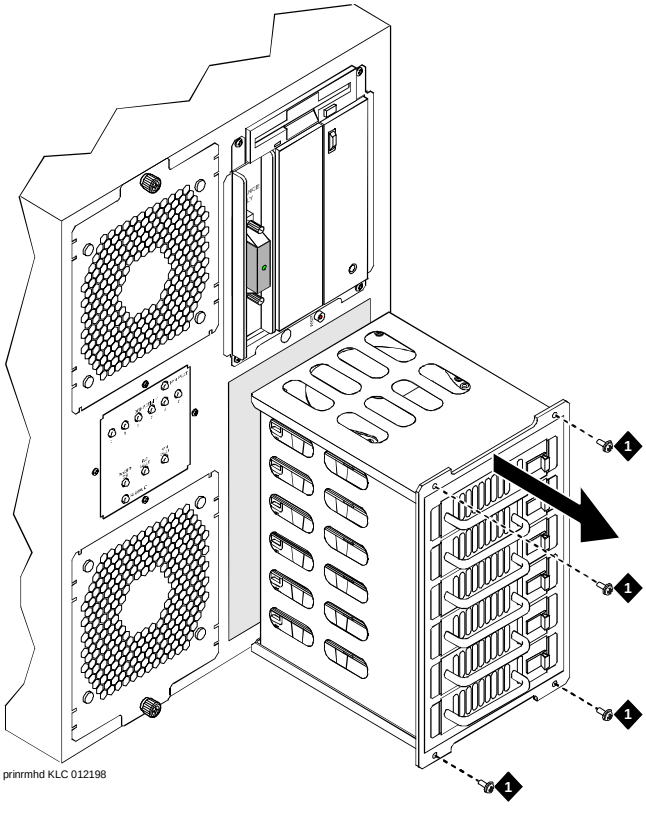

1. Hard disk drive carriage retaining screw

Figure 7-5. Hard Disk Drive Carriage

Removing the Hard Disk Drive Carriage Backplane

WARNING:

Observe proper electrostatic discharge precautions when you handle computer components. Wear an antistatic wrist strap that touches your bare skin and connect the strap cable to an earth ground. See "Protecting against Damage from Electrostatic Discharge", in Chapter 4, "Getting Inside the Computer".

To remove the hard disk drive carriage backplane, do the following:

1. Verify that the replacement equipment is on site and appears to be in usable condition with no obvious shipping damage.
2. If the system is in service, perform the following steps.

a. Stop the voice system. See "Stopping the Voice System," in Chapter 3, "Common System Procedures", for voice system administration.

b. Shut down the voice system. See "Shutting Down the Voice System," in Chapter 3, "Common System Procedures", for voice system administration.

c. Shut down the INTUITY CONVERSANT system. See "Shutting Down the Operating System," in Chapter 3, "Common System Procedures", for voice system administration.

3. Remove the incoming power. See "Removing Power from the MAP/100P", in Chapter 4, "Getting Inside the Computer", for this procedure.
4. Open the front door.
5. Remove the hard disk drive carriage. See "Removing the Hard Disk Drive Carriage", below for the procedure.
6. Remove the hard disk drive power cable from the hard disk drive carriage backplane (Figure 7-4).
7. Remove the SCSI bus cable from the hard disk drive carriage backplane (Figure 7-4).
8. Remove the SCSI ID cable from the hard disk drive carriage backplane (Figure 7-4).
9. Remove the six screws that secure the hard disk drive backplane to the hard disk drive carriage.
10. Remove the hard disk drive carriage backplane.

Installing the Hard Disk Drive Carriage Backplane

To install the hard disk drive carriage backplane, do the following:

1. Place the hard disk drive carriage backplane on the hard disk drive carriage.
2. Secure the hard disk drive backplane with the six screws you removed in Step 9 of "Removing the Hard Disk Drive Carriage Backplane".
3. Connect the hard disk drive power cable to the hard disk drive carriage backplane (Figure 7-4).
4. Connect the SCSI bus cable to the hard disk drive carriage backplane (Figure 7-4).
5. Connect the SCSI ID cable to the hard disk drive carriage backplane (Figure 7-4).
6. Replace the hard disk drive carriage. See "Installing the Hard Disk Drive Carriage", below for the procedure.

7. Close the front door.
8. Apply power to the MAP/100P. See "Restoring Power to the MAP/100P", in Chapter 4, "Getting Inside the Computer", for this procedure.

Replacing Cables

This section provides the procedures for replacing the following cables:

- Diskette
- Console alarm
- Power supply
- Remote maintenance circuit card interface
- Reset
- SCSI
- SCSI ID

Replacing the Diskette Cable

The diskette cable connects the diskette drive to the P5 200 MHz CPU circuit card (Figure 7-6).

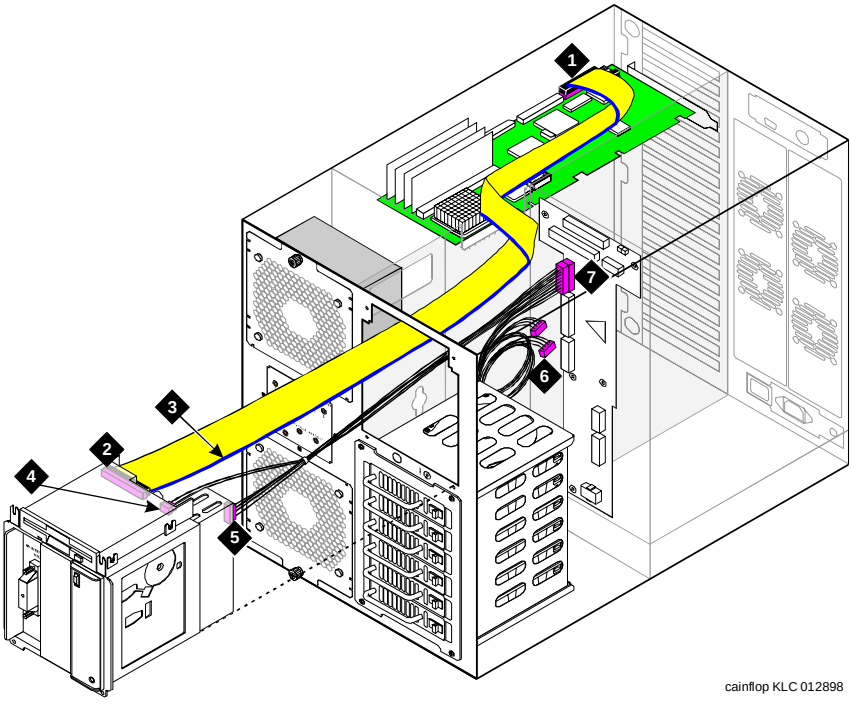

1. Diskette cable attachment to P5 200 MHz CPU circuit card
2. Diskette cable attachment to diskette drive
3. Pin 1 tracer
4. Power cable attachment to diskette drive
5. Power cable attachment to the cartridge tape drive
6. Extra power cable attachments (future)
7. Power cable attachment to power supply backplane - J6

Figure 7-6. Diskette and Power Supply Cables

Removing the Diskette Cable

To remove the diskette cable, do the following:

1. Verify that the replacement equipment is on site and appears to be in usable condition, with no obvious shipping damage.
2. If the system is in service, perform the following steps.
   a. Stop the voice system. See "Stopping the Voice System," in Chapter 3, "Common System Procedures", for voice system administration.
   b. Shut down the voice system. See "Shutting Down the Voice System," in Chapter 3, "Common System Procedures", for voice system administration.

c. Shut down the INTUITY CONVERSANT system. See "Shutting Down the Operating System," in Chapter 3, "Common System Procedures", for voice system administration.

3. Remove the incoming power. See "Removing Power from the MAP/100P", in Chapter 4, "Getting Inside the Computer", for this procedure.
4. Open the front door.
5. Remove the peripheral carriage by removing the four screws that secure it to the MAP/100P chassis (Figure 7-6).
6. Remove the diskette cable from the back of the diskette drive (Figure 7-6).
7. Access the circuit card cage. See "Accessing the Circuit Card Cage", in Chapter 4, "Getting Inside the Computer", for this procedure.
8. Remove the diskette cable from the P5 200 MHz CPU circuit card (Figure 7-6).
9. Gently feed the diskette cable through the MAP/100P chassis and out through the peripheral carriage hole.

Installing the Diskette Cable

To install the diskette cable, do the following:

1. Feed the diskette cable through the MAP/100P chassis with one end in the peripheral carriage area and the other end near the P5 200 MHz CPU circuit card (Figure 7-6).
2. Attach the diskette cable to the P5 200 MHz CPU circuit card (Figure 7-6).
3. Attach the diskette cable to the diskette drive (Figure 7-6).
4. Slide the peripheral carriage into the MAP/100P.
5. Secure the peripheral carriage the four screws removed in Step 5 of "Removing the Diskette Cable".
6. Close the front door.
7. Close the circuit card cage. See "Replacing the Dress Cover", in Chapter 4, "Getting Inside the Computer", for this procedure.
8. Apply power to the MAP/100P. See "Restoring Power to the MAP/100P", in Chapter 4, "Getting Inside the Computer", for this procedure.

Replacing the Console Alarm Cable

The console alarm cable connects the remote maintenance circuit card interface board with the console alarm panel (Figure 7-7).

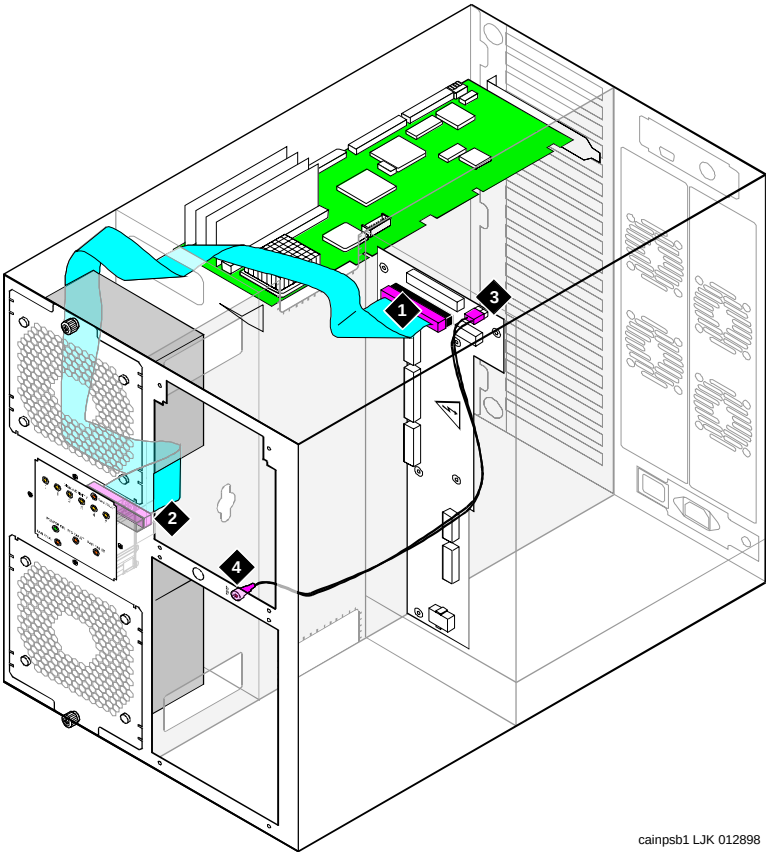

1. Console alarm cable attachment to the power supply backplane
2. Console alarm cable attachment to the console alarm panel
3. Reset cable attachment to the power supply backplane
4. Reset cable attachment to the reset switch

Figure 7-7. Console Alarm and Reset Cables

Removing the Console Alarm Cable

To remove the console alarm cable, do the following:

1. Verify that the replacement equipment is on site and appears to be in usable condition, with no obvious shipping damage.
2. If the system is in service, perform the following steps.
   a. Stop the voice system. See "Stopping the Voice System," in Chapter 3, "Common System Procedures", for voice system administration.

b. Shut down the voice system. See "Shutting Down the Voice System," in Chapter 3, "Common System Procedures", for voice system administration.

c. Shut down the INTUITY CONVERSANT system. See "Shutting Down the Operating System," in Chapter 3, "Common System Procedures", for voice system administration.

3. Remove the incoming power. See "Removing Power from the MAP/100P", in Chapter 4, "Getting Inside the Computer", for this procedure.
4. Open the front door.
5. Remove the peripheral carriage by removing the four screws that secure it to the MAP/100P chassis (Figure 7-6).
6. Remove the console alarm cable from the power supply backplane.

   The console alarm cable attaches to connection point J8 on the power supply backplane (Figure 7-2).
7. Remove the console alarm panel. See "Removing the Console Alarm Panel" for the procedure.
8. Disconnect the console alarm cable from the back of the console alarm panel. See "Removing the Console Alarm Panel" for the procedure.
9. Remove the console alarm cable from the MAP/100P.

Installing the Console Alarm Cable

To install the console alarm cable, do the following:

1. Feed the console alarm cable through the MAP/100P chassis with one end in the peripheral carriage area and the other end near the console alarm panel.
2. Attach the console alarm cable to the console alarm panel (Figure 7-7).
3. Attach the console alarm cable to the power supply backplane (Figure 7-2).
4. Slide the peripheral carriage into the MAP/100P.
5. Secure the peripheral carriage the four screws removed in Step 5 of "Removing the Console Alarm Cable".
6. Replace the console alarm panel. See "Installing the Console Alarm Panel" for the procedure.
7. Close the front door.
8. Apply power to the MAP/100P. See "Restoring Power to the MAP/100P", in Chapter 4, "Getting Inside the Computer", for this procedure.

Replacing the Power Supply Cables

The MAP/100P has cables which supply power to the:

- Cartridge tape and diskette drive
- Hard disk drive carriage backplane
- Circuit card backplane

Replacing the Cartridge Tape and Diskette Drive Power Supply Cable

The cartridge tape and diskette drive power supply cable connects the power supply backplane and both the cartridge tape and diskette drives (Figure 7-6).

Removing the Cartridge Tape and Diskette Drive Power Supply Cable

To remove the cartridge tape and diskette drive power supply cable, do the following:

1. Verify that the replacement equipment is on site and appears to be in usable condition, with no obvious shipping damage.
2. If the system is in service, perform the following steps.
   a. Stop the voice system. See "Stopping the Voice System," in Chapter 3, "Common System Procedures", for voice system administration.
   b. Shut down the voice system. See "Shutting Down the Voice System," in Chapter 3, "Common System Procedures", for voice system administration.
   c. Shut down the INTUITY CONVERSANT system. See "Shutting Down the Operating System," in Chapter 3, "Common System Procedures", for voice system administration.
3. Remove the incoming power. See "Removing Power from the MAP/100P", in Chapter 4, "Getting Inside the Computer", for this procedure.
4. Open the front door.
5. Remove the peripheral carriage by removing the four screws that secure it to the MAP/100P chassis (Figure 7-6).
6. Remove the cartridge tape drive power supply cable from the back of the cartridge tape drive (Figure 7-6).
7. Remove the diskette drive mini power supply cable from the diskette drive (Figure 7-6).

8. Remove the cartridge tape and diskette drive power supply cable from the power supply backplane.

   The cartridge tape and diskette drive power supply cable attaches to connection point J6 on the power supply backplane (Figure 7-2).

9. Remove the cartridge tape and diskette drive power supply cable from the MAP/100P.

Installing the Cartridge Tape and Diskette Drive Power Supply Cable

To install the cartridge tape and diskette drive power supply, do the following:

1. Attach the cartridge tape drive power supply cable to the back of the cartridge tape drive (Figure 7-6).
2. Attach the diskette drive mini power supply cable to the diskette drive (Figure 7-6).
3. Attach the cartridge tape and diskette drive power supply cable to the power supply backplane.

   The cartridge tape and diskette drive power supply cable attaches to connection point J6 on the power supply backplane (Figure 7-2).

4. Slide the peripheral carriage into the MAP/100P.
5. Secure the peripheral carriage the four screws removed in Step 5 of "Removing the Console Alarm Cable".
6. Replace the console alarm panel. See "Installing the Console Alarm Panel" for the procedure.
7. Close the front door.
8. Apply power to the MAP/100P. See "Restoring Power to the MAP/100P", in Chapter 4, "Getting Inside the Computer", for this procedure.

Replacing the Hard Disk Drive Carriage Backplane Power Supply Cable

The hard disk drive power supply cable connects the power supply backplane and the hard disk drive carriage backplane (Figure 7-8). This is the cable that supplies power to all six hard disk drives.

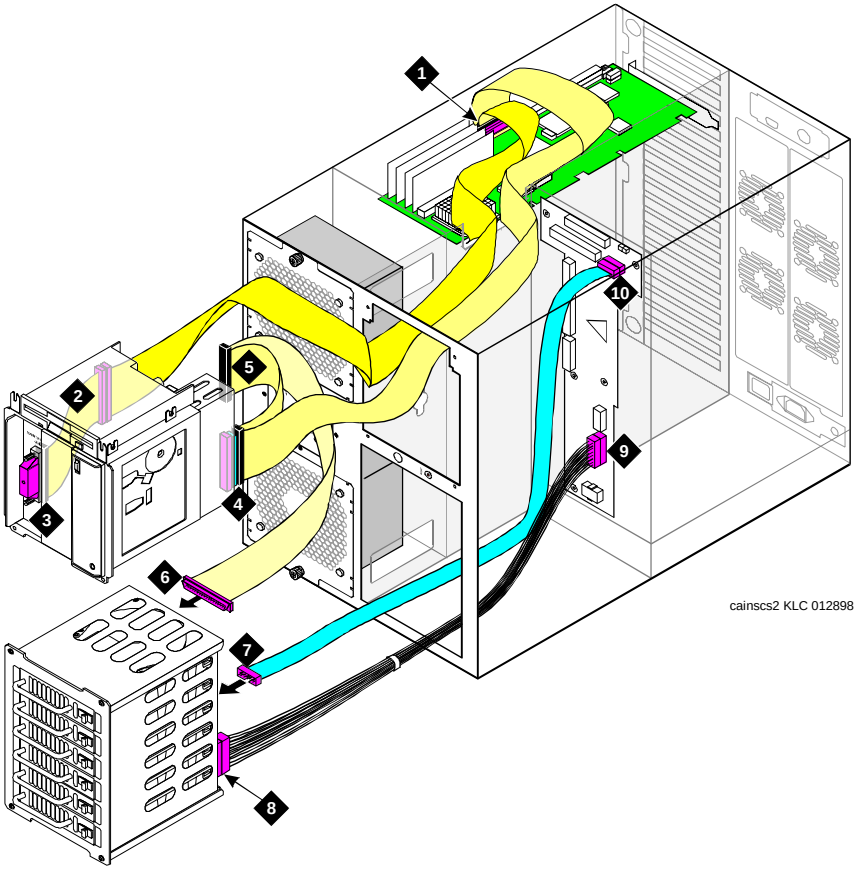

1. SCSI cable connection to P5 200 MHz CPU circuit card
2. SCSI cable connection to the mini SCSI cable extension
3. Mini SCSI cable extension connection to the external terminator
4. SCSI cable connection to the cartridge tape drive
5. Future SCSI connection
6. SCSI cable connection to the hard disk drive carriage backplane
7. SCSI ID cable connection to the hard disk drive carriage backplane
8. Power supply cable connection to the hard disk drive carriage backplane
9. Hard disk drive power supply cable connection to the power supply backplane
10. SCSI ID cable connection to the power supply backplane

Figure 7-8. SCSI and Hard Disk Drive Carriage Cables

Removing the Hard Disk Drive Carriage Power Supply Cable

To remove the hard disk drive carriage power supply cable, do the following:

1. Verify that the replacement equipment is on site and appears to be in usable condition, with no obvious shipping damage.
2. If the system is in service, perform the following steps.

a. Stop the voice system. See "Stopping the Voice System," in Chapter 3, "Common System Procedures", for voice system administration.

b. Shut down the voice system. See "Shutting Down the Voice System," in Chapter 3, "Common System Procedures", for voice system administration.

c. Shut down the INTUITY CONVERSANT system. See "Shutting Down the Operating System," in Chapter 3, "Common System Procedures", for voice system administration.

3. Remove the incoming power. See "Removing Power from the MAP/100P", in Chapter 4, "Getting Inside the Computer", for this procedure.
4. Open the front door.
5. Remove the hard disk drive carriage. See "Removing the Hard Disk Drive Carriage" below for the procedure.
6. Remove the hard disk drive carriage power supply cable from the hard disk drive carriage (Figure 7-8).
7. Remove the hard disk drive carriage power supply cable from the power supply backplane (Figure 7-8).
8. Remove the hard disk drive carriage power supply cable from the MAP/100P.

Installing the Hard Disk Drive Carriage Power Supply Cable

To install the hard disk drive carriage power supply cable, do the following:

1. Attach the hard disk drive carriage power supply cable to the hard disk drive carriage backplane (Figure 7-4).
2. Attach the hard disk drive carriage power supply cable to the power supply backplane.

   The hard disk drive carriage power supply cable attaches to connection point J2 on the power supply backplane (Figure 7-2).
3. Install the hard disk drive carriage. See "Installing the Hard Disk Drive Carriage" below for the procedure.
4. Close the front door.
5. Apply power to the MAP/100P. See "Restoring Power to the MAP/100P", in Chapter 4, "Getting Inside the Computer", for this procedure.

Replacing the Circuit Card Backplane Power Supply Cable

The circuit card backplane power supply cable connects the power supply backplane and the circuit card backplane (Figure 7-8).

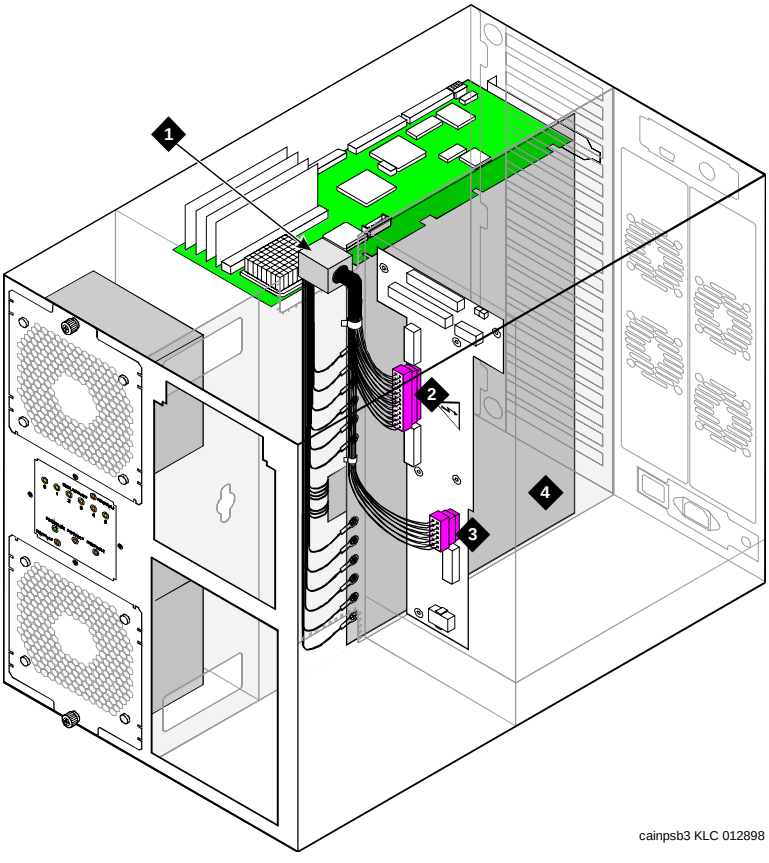

1. Toroid
2. Circuit card backplane power supply connection
3. Circuit card backplane power supply connection
4. Circuit card backplane

Figure 7-9. SCSI and Hard Disk Drive Carriage Cables

Removing the Circuit Card Backplane Power Supply Cable

To remove the circuit card backplane power supply cable, do the following:

1. Verify that the replacement equipment is on site and appears to be in usable condition, with no obvious shipping damage.
2. If the system is in service, perform the following steps.
   a. Stop the voice system. See "Stopping the Voice System," in Chapter 3, "Common System Procedures", for voice system administration.

b. Shut down the voice system. See "Shutting Down the Voice System," in Chapter 3, "Common System Procedures", for voice system administration.

c. Shut down the INTUITY CONVERSANT system. See "Shutting Down the Operating System," in Chapter 3, "Common System Procedures", for voice system administration.

3. Remove the incoming power. See "Removing Power from the MAP/100P", in Chapter 4, "Getting Inside the Computer", for this procedure.
4. Open the front door.
5. Remove the peripheral carriage by removing the four screws that secure it to the MAP/100P chassis (Figure 7-6).
6. Remove the hard disk drive carriage. See "Removing the Hard Disk Drive Carriage" below for the procedure.
7. Remove the circuit card backplane power supply cable from the power supply backplane (Figure 7-8).
8. Remove all of the circuit cards. See "Removing a Circuit Card", in Chapter 5, "Replacing, Installing, or Upgrading Circuit Cards", for the procedure.
9. Remove the circuit card backplane power supply cable from the circuit card backplane (Figure 7-1).
10. Remove the circuit card backplane power supply cable from the MAP/100P.

Installing the Circuit Card Backplane Power Supply Cable

To install the circuit card backplane power supply cable, do the following:

1. Attach the circuit card backplane power supply cable to the power supply backplane.

   The circuit card backplane power supply cable attaches to connection points J3 and J5 on the power supply backplane (Figure 7-2).
2. Attach the circuit card backplane power cable to the circuit card backplane (Figure 7-1).
3. Replace all of the circuit cards. See "Installing a Circuit Card", in Chapter 5, "Replacing, Installing, or Upgrading Circuit Cards", for the procedure.
4. Install the hard disk drive carriage. See "Installing the Hard Disk Drive Carriage" below for the procedure.
5. Secure the peripheral carriage the four screws removed in Step 5 of "Removing the Circuit Card Backplane Power Supply Cable".
6. Close the front door.
7. Apply power to the MAP/100P. See "Restoring Power to the MAP/100P", in Chapter 4, "Getting Inside the Computer", for this procedure.

Replacing the Remote Maintenance Circuit Card Interface Cable

The remote maintenance circuit card interface cable () connects the:

- Remote maintenance circuit card
- Remote maintenance circuit card interface board
- P5 200 MHz CPU circuit card

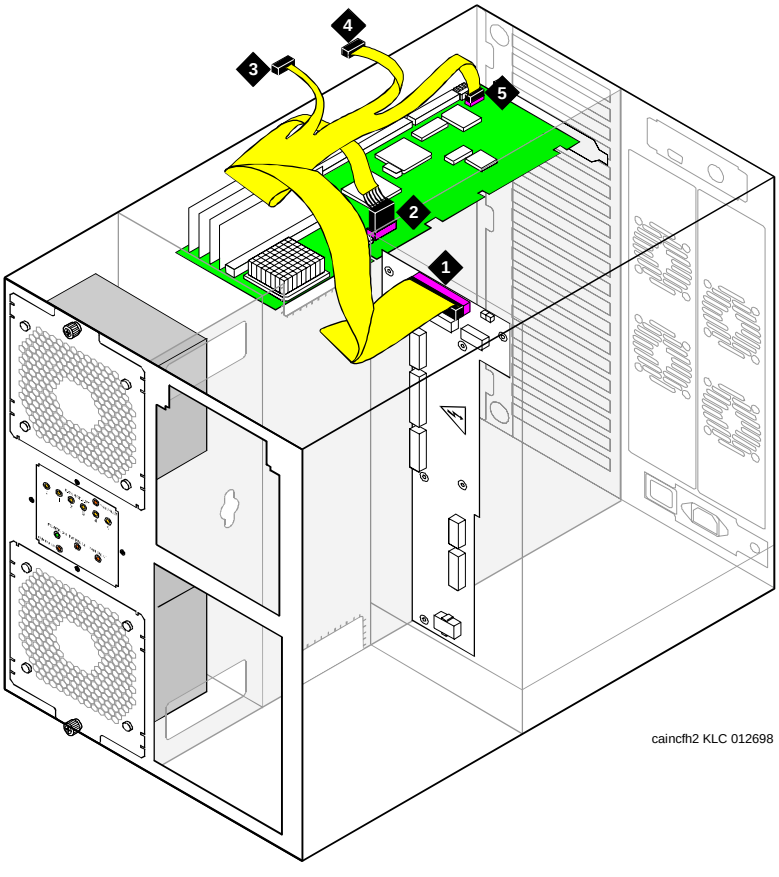

1. Connection to the power supply backplane
2. Connection to the keyboard port on the P5 200 MHz CPU circuit card
3. Connection to the platform reset port on the remote maintenance circuit card
4. Connection to the fan status port on the remote maintenance circuit card
5. Connection to the COM2 port on the P5 200 MHz CPU circuit card

Figure 7-10. Remote Maintenance Circuit Card Interface Cable

Removing the Remote Maintenance Circuit Card Interface Cable

To remove the remote maintenance circuit card interface cable, do the following:

1. Verify that the replacement equipment is on site and appears to be in usable condition, with no obvious shipping damage.
2. If the system is in service, perform the following steps.
   a. Stop the voice system. See "Stopping the Voice System," in Chapter 3, "Common System Procedures", for voice system administration.
   b. Shut down the voice system. See "Shutting Down the Voice System," in Chapter 3, "Common System Procedures", for voice system administration.
   c. Shut down the INTUITY CONVERSANT system. See "Shutting Down the Operating System," in Chapter 3, "Common System Procedures", for voice system administration.
3. Remove the incoming power. See "Removing Power from the MAP/100P", in Chapter 4, "Getting Inside the Computer", for this procedure.
4. Open the front door.
5. Remove the peripheral carriage by removing the four screws that secure it to the MAP/100P chassis (Figure 7-6).
6. Disconnect the remote maintenance circuit card interface cable from the power supply backplane (Figure 7-10).
7. Disconnect the remote maintenance circuit card interface cable from the remote maintenance circuit card platform reset connection (Figure 7-10).
8. Disconnect the remote maintenance circuit card interface cable from the remote maintenance circuit card fan status connection (Figure 7-10).
9. Disconnect the remote maintenance circuit card interface cable from the P5 200 MHz CPU circuit card keyboard connection (Figure 7-10).
10. Disconnect the remote maintenance circuit card interface cable from the P5 200 MHz CPU circuit card COM2 port connection (Figure 7-10).
11. Remove the reset cable from the MAP/100P chassis.

Installing the Remote Maintenance Circuit Card Interface Cable

To install the remote maintenance circuit card interface cable, do the following:

1. Connect the remote maintenance circuit card interface cable to the power supply backplane (Figure 7-10).

   The remote maintenance circuit card interface cable attaches to connection point J9 on the power supply backplane (Figure 7-2).

2. Connect the remote maintenance circuit card interface cable to the P5 200 MHz CPU circuit card keyboard connection (Figure 7-11).

NOTE:
The P5 200 MHz CPU circuit card must be pulled partially out of the MAP/100P before the cable can be connected to the keyboard port.

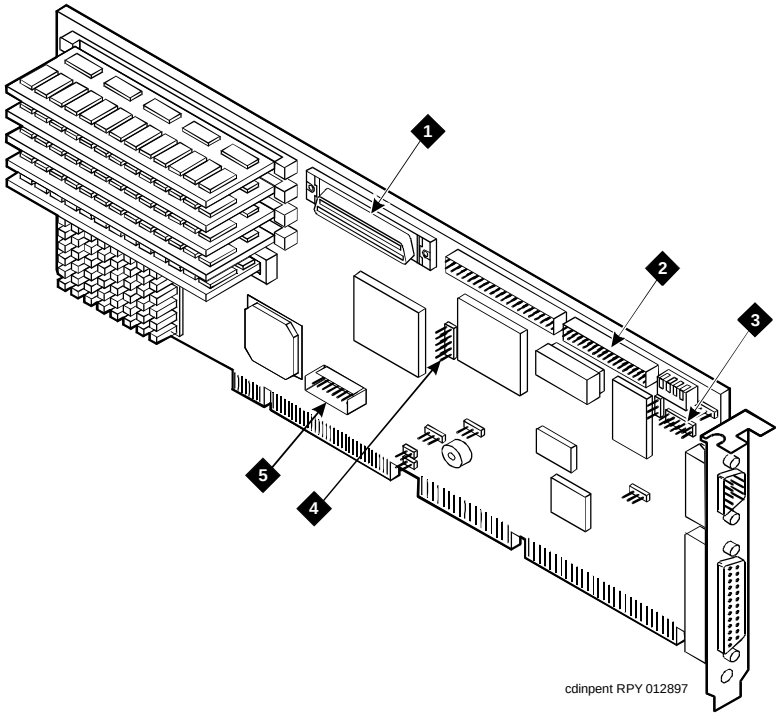

1. SCSI cable connector
2. Diskette cable connector
3. COM2 cable connector
4. COM2 connector
5. Keyboard cable connector

Figure 7-11. P5 200 MHz CPU Circuit Card

3. Connect the remote maintenance circuit card interface cable to the P5 200 MHz CPU circuit card COM2 port connection (Figure 7-11).
4. Connect the remote maintenance circuit card interface cable to the remote maintenance circuit card platform reset connection (Figure 7-12).

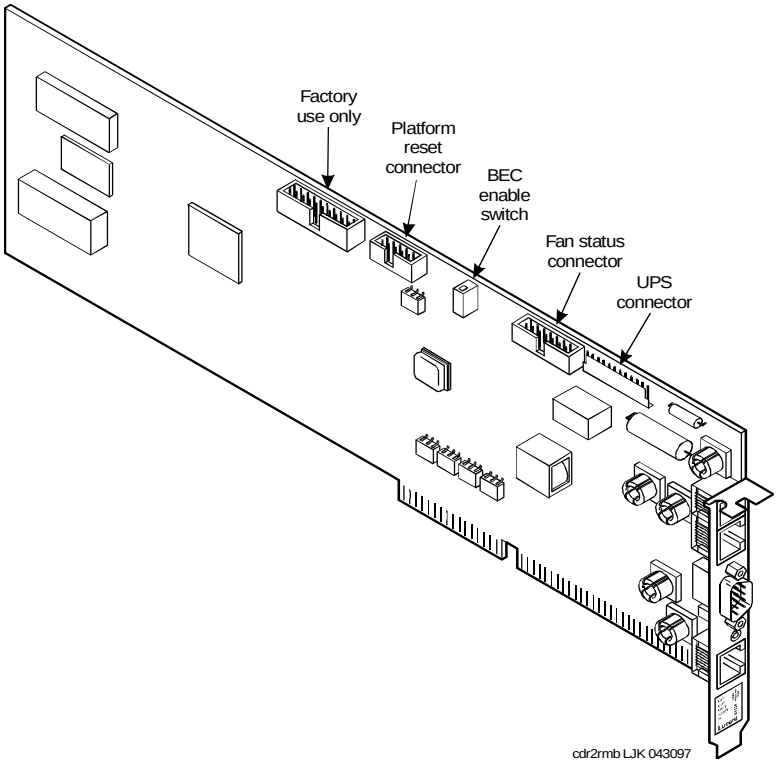

Figure 7-12. Remote Maintenance Circuit Card

5. Connect the remote maintenance circuit card interface cable to the remote maintenance circuit card fan status connection (Figure 7-12).
6. Slide the peripheral carriage into the MAP/100P.
7. Secure the peripheral carriage the four screws removed in Step 5 of "Removing the Remote Maintenance Circuit Card Interface Cable".
8. Close the front door.
9. Apply power to the MAP/100P. See "Restoring Power to the MAP/100P", in Chapter 4, "Getting Inside the Computer", for this procedure.

Replacing the Reset Cable

The reset cable connects the reset switch on the front of the MAP/100P to the power supply backplane (Figure 7-7).

Removing the Reset Cable

To remove the power ON/OFF cable, do the following:

1. Verify that the replacement equipment is on site and appears to be in usable condition, with no obvious shipping damage.
2. If the system is in service, perform the following steps.
   a. Stop the voice system. See "Stopping the Voice System," in Chapter 3, "Common System Procedures", for voice system administration.
   b. Shut down the voice system. See "Shutting Down the Voice System," in Chapter 3, "Common System Procedures", for voice system administration.
   c. Shut down the INTUITY CONVERSANT system. See "Shutting Down the Operating System," in Chapter 3, "Common System Procedures", for voice system administration.
3. Remove the incoming power. See "Removing Power from the MAP/100P", in Chapter 4, "Getting Inside the Computer", for this procedure.
4. Open the front door.
5. Remove the peripheral carriage by removing the four screws that secure it to the MAP/100P chassis (Figure 7-6).
6. Disconnect the reset cable from the reset switch (Figure 7-7).
7. Disconnect the reset cable from the power supply backplane (Figure 7-7).
8. Remove the reset cable from the MAP/100P chassis.

Installing the Reset Cable

To install the reset cable, do the following:

1. Place the reset cable in the MAP/100P chassis peripheral carriage area.
2. Attach the reset cable to the reset switch (Figure 7-7).
3. Attach the reset cable to the power supply backplane (Figure 7-7).

   The reset cable attaches to connection point J10 on the power supply backplane (Figure 7-2).
4. Slide the peripheral carriage into the MAP/100P.
5. Secure the peripheral carriage the four screws removed in Step 5 of "Removing the Reset Cable".
6. Close the front door.
7. Apply power to the MAP/100P. See "Restoring Power to the MAP/100P", in Chapter 4, "Getting Inside the Computer", for this procedure.

Installing the SCSI Cable

The SCSI cable (Figure 7-8) connects the:

- External SCSI terminator

  NOTE:
  The SCSI cable connects to external SCSI terminator through a mini SCSI extension cable (Figure 7-8).

- P5 200 MHz CPU circuit card
- Cartridge tape drive
- Hard disk drive carriage backplane

Removing the SCSI Cable

To remove the SCSI cable, do the following:

1. Verify that the replacement equipment is on site and appears to be in usable condition, with no obvious shipping damage.
2. If the system is in service, perform the following steps.
   a. Stop the voice system. See "Stopping the Voice System," in Chapter 3, "Common System Procedures", for voice system administration.
   b. Shut down the voice system. See "Shutting Down the Voice System," in Chapter 3, "Common System Procedures", for voice system administration.
   c. Shut down the INTUITY CONVERSANT system. See "Shutting Down the Operating System," in Chapter 3, "Common System Procedures", for voice system administration.
3. Remove the incoming power. See "Removing Power from the MAP/100P", in Chapter 4, "Getting Inside the Computer", for this procedure.
4. Open the front door.
5. Remove the peripheral carriage by removing the four screws that secure it to the MAP/100P chassis (Figure 7-6).
6. Remove the hard disk drive carriage. See "Removing the Hard Disk Drive Carriage" below for the procedure.
7. Remove the SCSI cable from the mini SCSI extension cable (Figure 7-8).

   NOTE:
   If the mini SCSI extension cable is to be replaced, remove it by loosening the two screws on the external SCSI connector.

8. Remove the SCSI cable from the cartridge tape drive (Figure 7-8).

   NOTE:
   The cartridge tape drive has an adapter attached to it that allows it to connect to the SCSI cable. Make sure the adapter remains attached to the cartridge tape drive.

9. Remove the SCSI cable from the P5 200 MHz CPU circuit card (Figure 7-11).
10. Remove the SCSI cable from the hard disk drive carriage backplane (Figure 7-4).
11. Remove the SCSI cable from the MAP/100P.

Installing the SCSI Cable

To install the SCSI cable, do the following:

1. Attach one end of the SCSI cable to the external SCSI terminator (Figure 7-8).
2. Attach the SCSI cable to the cartridge tape drive (Figure 7-8).

   NOTE:
   The cartridge tape drive has an adapter attached to it that allows it to connect to the SCSI cable. Make sure the adapter remains attached to the cartridge tape drive.

3. Attach the SCSI cable to the P5 200 MHz CPU circuit card (Figure 7-11).
4. Attach the SCSI cable to the hard disk drive carriage backplane (Figure 7-4).
5. Slide the peripheral carriage into the MAP/100P.
6. Secure the peripheral carriage the four screws removed in Step 5 of "Removing the SCSI Cable".
7. Install the hard disk drive carriage. See "Installing the Hard Disk Drive Carriage" below for the procedure.
8. Close the front door.
9. Apply power to the MAP/100P. See "Restoring Power to the MAP/100P", in Chapter 4, "Getting Inside the Computer", for this procedure.

Installing the SCSI ID Cable

The SCSI cable connects the power supply backplane and the hard disk drive carriage backplane (Figure 7-8). This cable sets the SCSI IDs on all six hard disk drives.

Removing the SCSI ID Cable

To remove the SCSI cable, do the following:

1. Verify that the replacement equipment is on site and appears to be in usable condition, with no obvious shipping damage.
2. If the system is in service, perform the following steps.
   a. Stop the voice system. See "Stopping the Voice System," in Chapter 3, "Common System Procedures", for voice system administration.
   b. Shut down the voice system. See "Shutting Down the Voice System," in Chapter 3, "Common System Procedures", for voice system administration.
   c. Shut down the INTUITY CONVERSANT system. See "Shutting Down the Operating System," in Chapter 3, "Common System Procedures", for voice system administration.
3. Remove the incoming power. See "Removing Power from the MAP/100P", in Chapter 4, "Getting Inside the Computer", for this procedure.
4. Open the front door.
5. Remove the hard disk drive carriage. See "Removing the Hard Disk Drive Carriage" below for the procedure.
6. Remove the SCSI ID cable from the hard disk drive carriage (Figure 7-8).
7. Remove the SCSI ID cable from the power supply backplane (Figure 7-8).
8. Remove the SCSI ID cable from the MAP/100P.

Installing the SCSI ID Cable

To install the SCSI ID cable, do the following:

1. Attach the SCSI ID cable to the hard disk drive carriage backplane (Figure 7-4).
2. Attach the SCSI ID cable to the power supply backplane.

   The SCSI ID cable attaches to connection point J7 on the power supply backplane (Figure 7-2).
3. Install the hard disk drive carriage. See "Installing the Hard Disk Drive Carriage" below for the procedure.
4. Close the front door.
5. Apply power to the MAP/100P. See "Restoring Power to the MAP/100P", in Chapter 4, "Getting Inside the Computer", for this procedure.

Replacing the Cartridge Tape Drive

The cartridge tape drive is located in Peripheral Bay 3 (Figure 7-13). The following procedures detail removal and installation of the cartridge tape drive for the MAP/100P.

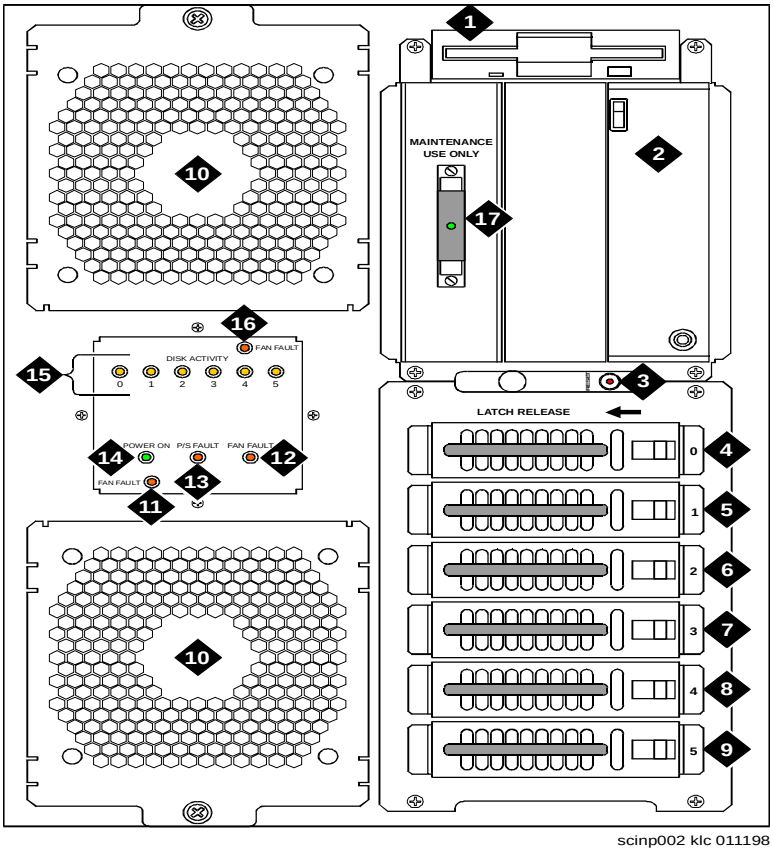

1. Diskette drive
2. Cartridge tape drive
3. Reset push button
4. Hard Disk Drive 0
5. Hard Disk Drive 1
6. Hard Disk Drive 2
7 Hard Disk Drive 3
8. Hard Disk Drive 4
9. Hard Disk Drive 5
10. Circuit card cage fan
11. Fan fault LED
12. Fan fault LED
13. Power supply fault LED
14. Power On LED
15. Hard disk drive activity LEDs
16. Fan fault LED
17. SCSI terminator

Figure 7-13. Front View of the MAP/100P

WARNING:
Observe proper electrostatic discharge precautions when you handle computer components. Wear an antistatic wrist strap that touches your bare skin and connect the strap cable to an earth ground. See "Protecting against Damage from Electrostatic Discharge", in Chapter 4, "Getting Inside the Computer".

Removing a Cartridge Tape Drive

To remove a cartridge tape drive, do the following:

1. Verify that the replacement equipment is on site and appears to be in usable condition, with no obvious shipping damage.
2. If the system is in service, perform the following steps.
   a. Stop the voice system. See "Stopping the Voice System," in Chapter 3, "Common System Procedures", for voice system administration.
   b. Shut down the voice system. See "Shutting Down the Voice System," in Chapter 3, "Common System Procedures", for voice system administration.
   c. Shut down the INTUITY CONVERSANT system. See "Shutting Down the Operating System," in Chapter 3, "Common System Procedures", for voice system administration.
3. Remove the incoming power. See "Removing Power from the MAP/100P", in Chapter 4, "Getting Inside the Computer", for this procedure.
4. Open the front door.
5. Remove the peripheral carriage by removing the four screws that secure it to the MAP/100P chassis (Figure 7-13).
6. Remove the power cord connector from the back of the cartridge tape drive.
7. Remove the SCSI cable assembly connection from the back of the cartridge tape drive. Move it to the side.

   NOTE:
   The SCSI cable has an adapter attached to it that allows it to connect to the cartridge tape drive. Make sure the adapter remains attached to the SCSI cable.

8. Remove the four screws securing the cartridge tape drive to the peripheral carriage (Figure 7-14).

CAUTION:

Keep these four screws separate. These screws are metric. Using any of the other screws associated with the MAP/100P will damage the threads in the diskette drive mounting hardware.

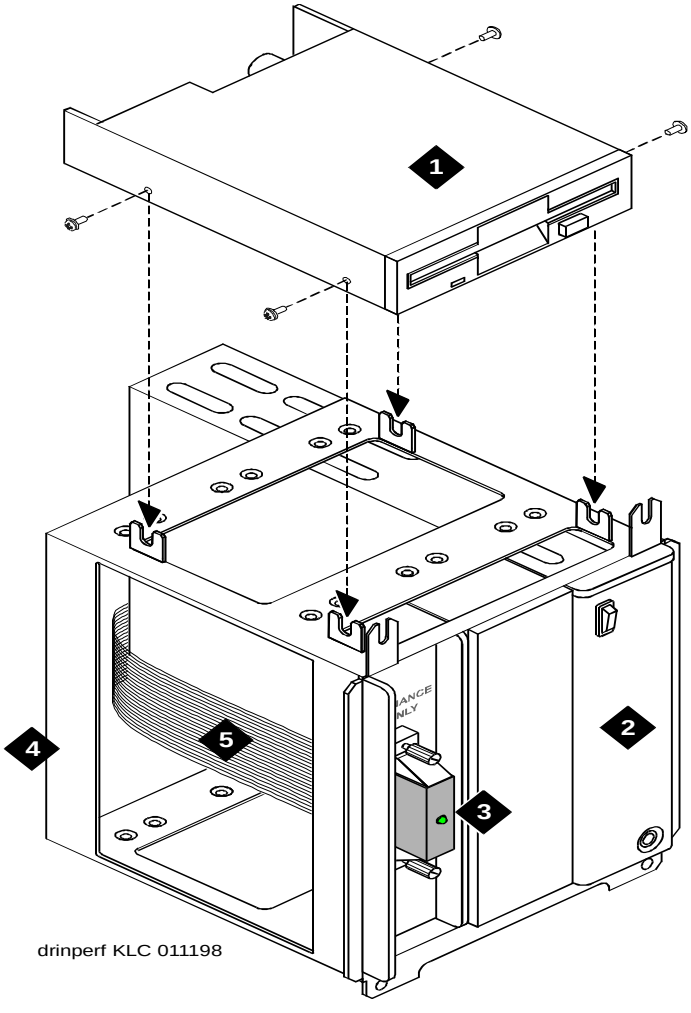

1. Diskette drive
2. Cartridge tape drive
3. SCSI terminator
4. Peripheral carriage
5. SCSI cable

Figure 7-14. Peripheral Carriage

Installing a Cartridge Tape Drive

To install a cartridge tape drive, do the following:

1. Remove the new cartridge tape unit from its ESD-protective wrapping.

   NOTE:
   Keep the package and all ESD-protective wrapping to return the defective unit. Re-use of the original replacement unit packaging is necessary to meet the manufacturer's warranty.

2. Verify that these settings are correct (Figure 7-15).

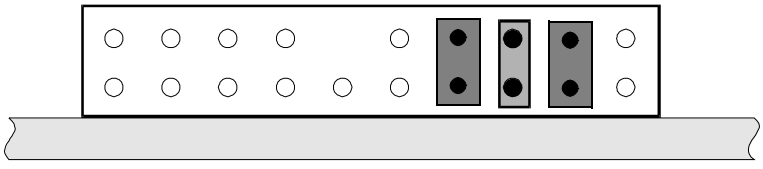

Figure 7-15. Jumper Settings for the Cartridge Tape Drive, SCSI ID = 6

3. Remove the terminating resistors (Figure 7-16).

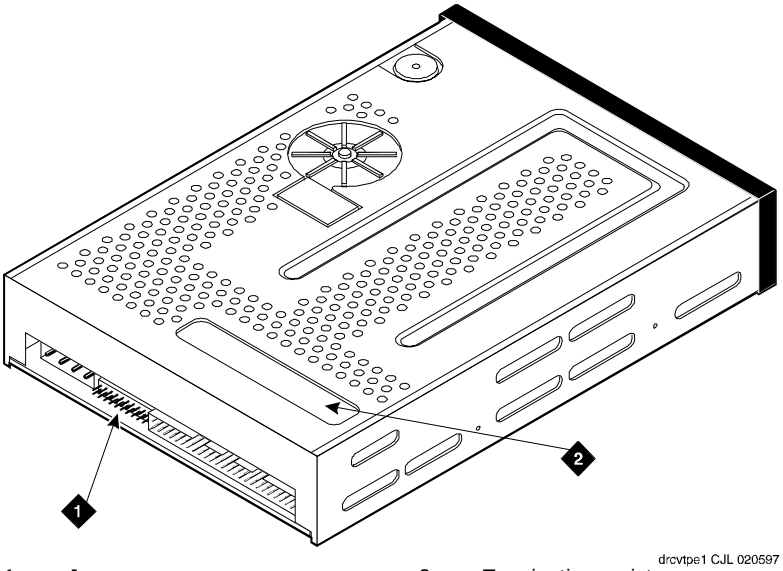

1. Jumpers
2. Terminating resistors

Figure 7-16. Cartridge Tape Drive

4. Secure the cartridge tape drive to the peripheral carriage using the four screws removed in Step 8 of "Removing a Cartridge Tape Drive".
5. Attach the SCSI bus cable assembly.
6. Attach the power cable assembly that is provided with the system power supply wiring.
7. Slide the peripheral carriage into the MAP/100P.
8. Secure the peripheral carriage the four screws removed in Step 5 of "Removing a Cartridge Tape Drive".
9. Close the front door.
10. Apply power to the MAP/100P. See "Restoring Power to the MAP/100P", in Chapter 4, "Getting Inside the Computer", for this procedure.

Replacing the Console Alarm Panel

The console alarm panel (Figure 7-17) displays the status of the MAP/100P. The console alarm panel is located on the front of the MAP/100P (Figure 7-13).

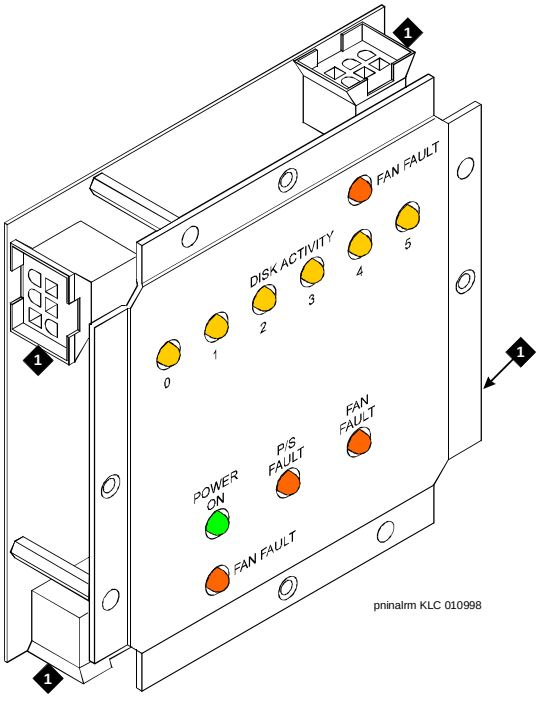

1. Circuit card cage fan connection

Figure 7-17. Console Alarm Panel

Removing the Console Alarm Panel

To remove the console alarm panel, do the following:

1. Verify that the replacement equipment is on site and appears to be in usable condition with no obvious shipping damage.
2. If the system is in service, perform the following steps.
   a. Stop the voice system. See "Stopping the Voice System," in Chapter 3, "Common System Procedures", for voice system administration.
   b. Shut down the voice system. See "Shutting Down the Voice System," in Chapter 3, "Common System Procedures", for voice system administration.
   c. Shut down the INTUITY CONVERSANT system. See "Shutting Down the Operating System," in Chapter 3, "Common System Procedures", for voice system administration.
3. Remove the incoming power. See "Removing Power from the MAP/100P", in Chapter 4, "Getting Inside the Computer", for this procedure.
4. Open the front door.
5. Remove both card cage fans. See "Removing a Fan", below for the procedure.
6. Remove the four screws that secure the console alarm panel to the MAP/100P (Figure 7-13).
7. Pull the console alarm panel gently out of the MAP/100P.
8. Remove the cable connected to the back of the console alarm panel (Figure 7-18).

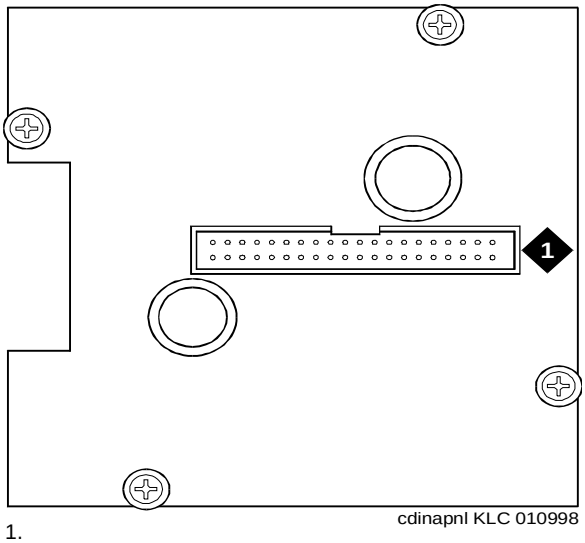

1.
Alarm cable connection

Figure 7-18. Back View of the Console Alarm Panel

Installing the Console Alarm Panel

To install the console alarm panel, do the following:

1. Attach the alarm cable to the connection on the back of the console alarm panel (Figure 7-18).
2. Align the console alarm panel so that the display is oriented correctly.
3. Slide the console alarm panel into the MAP/100P.
4. Secure the console alarm panel with the four screws you removed in Step 6 of "Removing the Console Alarm Panel", above.
5. Replace the fans. See "Installing a Fan", below for the procedure.
6. Apply power to the MAP/100P. See "Restoring Power to the MAP/100P", in Chapter 4, "Getting Inside the Computer", for this procedure.
7. Verify the correct operation of the console alarm panel.
8. Close the front door.

Replacing the Diskette Drive

The 1.44 Mbyte, 3.5-inch diskette drive is assembled by the manufacturer with a mounting kit. The diskette drive is located in Peripheral Bay 4, as shown in Figure 7-13.

WARNING:
Observe proper electrostatic discharge precautions when you handle computer components. Wear an antistatic wrist strap that touches your bare skin and connect the strap cable to an earth ground. See "Protecting against Damage from Electrostatic Discharge", in Chapter 4, "Getting Inside the Computer".

Removing the Diskette Drive

To remove the diskette drive, do the following:

1. Verify that the replacement equipment is on site and appears to be in usable condition, with no obvious shipping damage.
2. If the system is in service, perform the following steps.
   a. Stop the voice system. See "Stopping the Voice System," in Chapter 3, "Common System Procedures", for voice system administration.
   b. Shut down the voice system. See "Shutting Down the Voice System," in Chapter 3, "Common System Procedures", for voice system administration.
   c. Shut down the INTUITY CONVERSANT system. See "Shutting Down the Operating System," in Chapter 3, "Common System Procedures", for voice system administration.
3. Remove the incoming power. See "Removing Power from the MAP/100P", in Chapter 4, "Getting Inside the Computer", for this procedure.
4. Open the front door.
5. Remove the peripheral carriage by removing the four screws that secure it to the MAP/100P chassis (Figure 7-13).
6. Remove the mini power cord connector from the back of the diskette drive.
7. Remove the diskette cable assembly connection from the back of the diskette drive. Move it to the side.

   NOTE:
   Make sure to note the position of the ribbon cable pin 1 indicator.

8. Remove the four screws securing the diskette drive to the peripheral carriage (Figure 7-14).

CAUTION:
Keep these four screws separate. These screws are metric. Using any of the other screws associated with the MAP/100P will damage the threads in the diskette drive mounting hardware.

9. Lift the diskette drive off of the peripheral carriage.

CAUTION:
Handle the diskette drive with care. The spindle motor, stepping motor, and printed circuit board are located on the bottom of the diskette drive. Do not place any force or strain on these components and do not touch the surface of the diskette drive printed circuit board.

10. Place the diskette drive upside down, with the printed circuit board facing up, on an ESD-protected surface.

Installing a Diskette Drive

To install a diskette drive, do the following:

1. Remove the new diskette drive unit from its ESD-protective wrapping.

NOTE:
Keep the package and all ESD-protective wrapping to return the defective unit. Re-use of the original replacement unit packaging is necessary to meet the manufacturer's warranty.

2. The MAP/100P supports six versions of the diskette drive:
   - FD-235HF-201
   - FD-235HF-3201
   - FD-235HF-4429
   - FD-235F-5429
   - FD-235HF-6429
   - FD-235HF-6529
   - FD-235HF-7529

   Identify the diskette drive you are installing.

3. Verify that the jumpers are set as shown in Figure 7-19 and Figure 7-20.

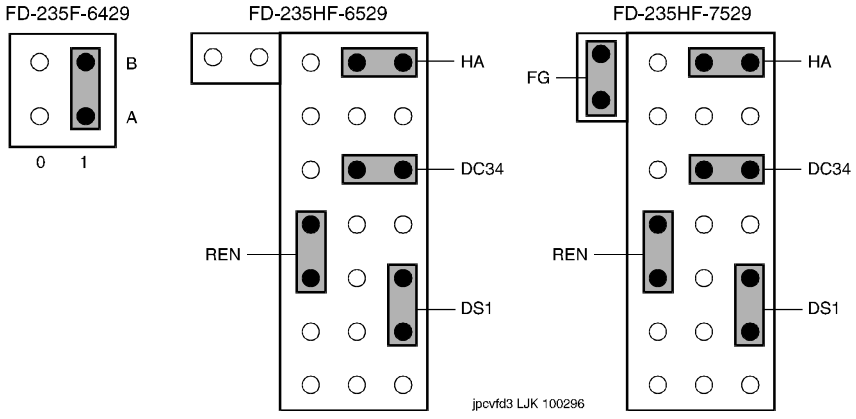

Figure 7-19. Diskette Drive Jumper Connections (6429 and 6529)

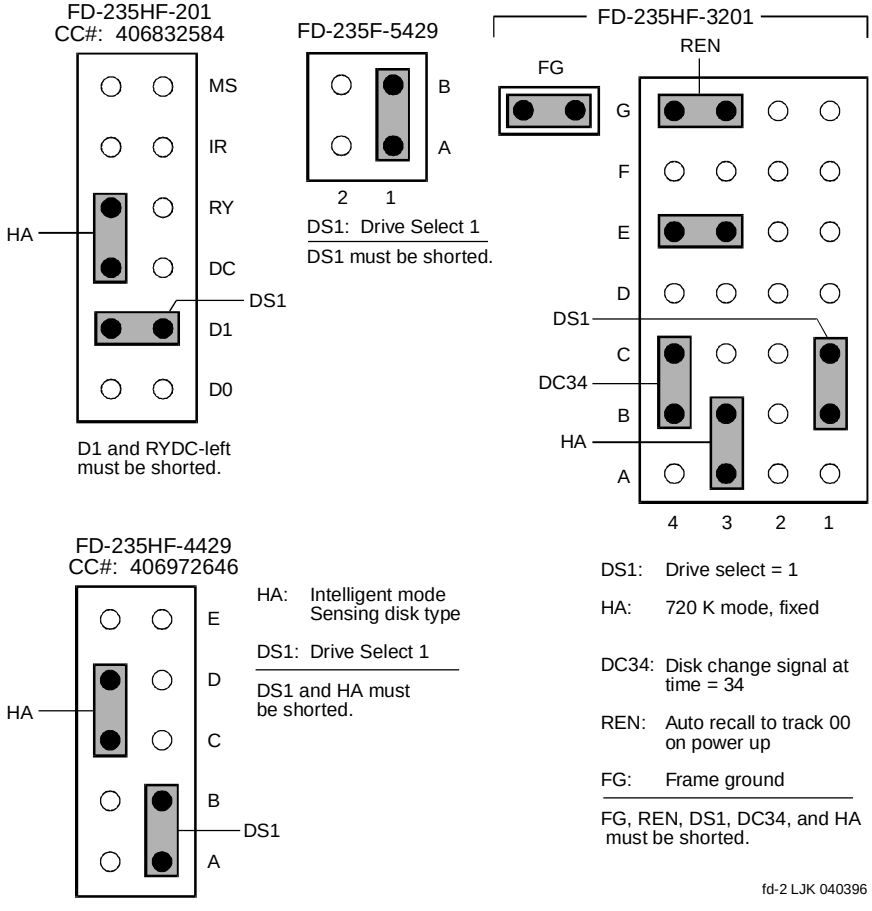

Figure 7-20. Diskette Drive Jumper Connections (201, 3201, 4429, and 5429)

4. Secure the diskette drive to the peripheral carriage using the four screws removed in Step 8 of "Removing the Diskette Drive".
5. Attach the diskette drive cable assembly.

   Ensure that the diskette cable pin 1 indicator is towards the diskette drive spiral motor.
6. Attach the mini power-cable assembly that is provided with the system power supply wiring.
7. Slide the peripheral carriage into the MAP/100P.
8. Secure the peripheral carriage the four screws removed in Step 5 of "Removing the Diskette Drive".
9. Close the front door.
10. Apply power to the MAP/100P. See "Restoring Power to the MAP/100P", in Chapter 4, "Getting Inside the Computer", for this procedure.

Replacing a Fan

The MAP/100P contains five fans that provide forced-air cooling for the unit. There are four circuit card cage fans and one power supply fan. The circuit card cage fans are serviceable. The power supply fan is *not* serviceable and repairs should *never* be attempted.

The circuit card cage fans are located behind the front door (Figure 7-13). The circuit card cage fans are attached to assemblies in matched pairs. If a fan is defective, the associated Fan Fault LED will be lit (Figure 7-17).

Removing a Fan

To remove a circuit card cage fan, do the following:

1. Locate the defective fan.
2. If the system is in service, perform the following steps.
   a. Stop the voice system. See "Stopping the Voice System," in Chapter 3, "Common System Procedures", for voice system administration.
   b. Shut down the voice system. See "Shutting Down the Voice System," in Chapter 3, "Common System Procedures", for voice system administration.
   c. Shut down the INTUITY CONVERSANT system. See "Shutting Down the Operating System," in Chapter 3, "Common System Procedures", for voice system administration.
3. Remove power from the MAP/100P. See "Removing Power from the MAP/100P", in Chapter 4, "Getting Inside the Computer", for the procedure.
4. Open the front door.
5. Loosen the thumbscrew on the front of the circuit card cage fan assembly (Figure 7-21).

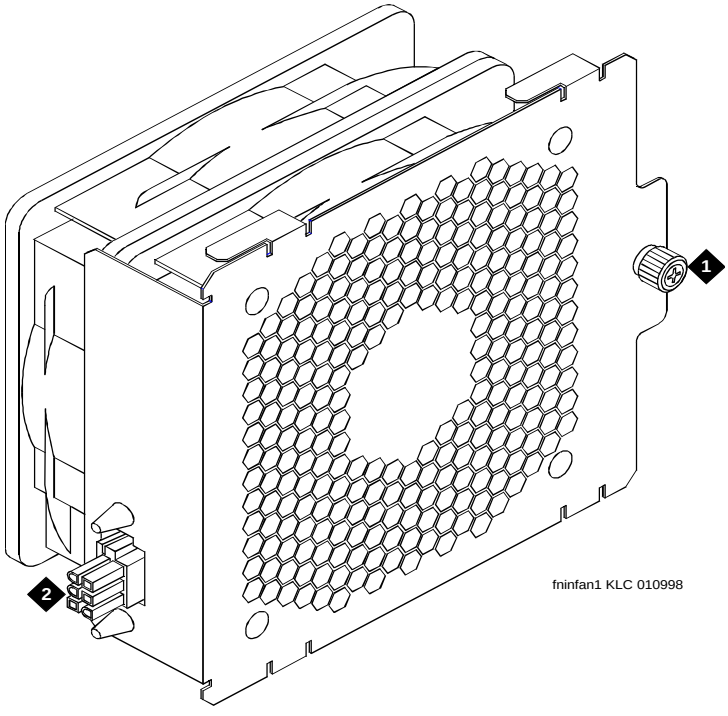

1. Thumbscrew
2. Power connector

Figure 7-21. Circuit Card Cage Fan Assembly

6. Slide the circuit card cage fan assembly away from the console alarm panel in the center of the MAP/100P.

Installing a Fan

To install a fan assembly, do the following:

1. Place the circuit card cage fan assembly in the MAP/100P.
2. Slide the circuit card cage fan assembly toward the console alarm panel until the power connector is mated with the console alarm panel connection.
3. Tighten the locking thumbscrew.
4. Close the front door.

5. Apply power to the MAP/100. See "Restoring Power to the MAP/100P", in Chapter 4, "Getting Inside the Computer", for this procedure.
6. Verify that the fan is working by observing the MAP/100P console alarm panel (Figure 7-17).

CAUTION:
Do not leave the MAP/100P powered up for any length of time until the circuit card cage fans are fully operational.

Replacing the Fan Filter

The MAP/100P is equipped with a fan filter located behind the front door. The fan filter should be checked on a regular basis to determine the condition and cleaned if necessary.

Removing Fan Filters

The filters can be removed by opening the front doors and detaching the filter material (Figure 7-22).

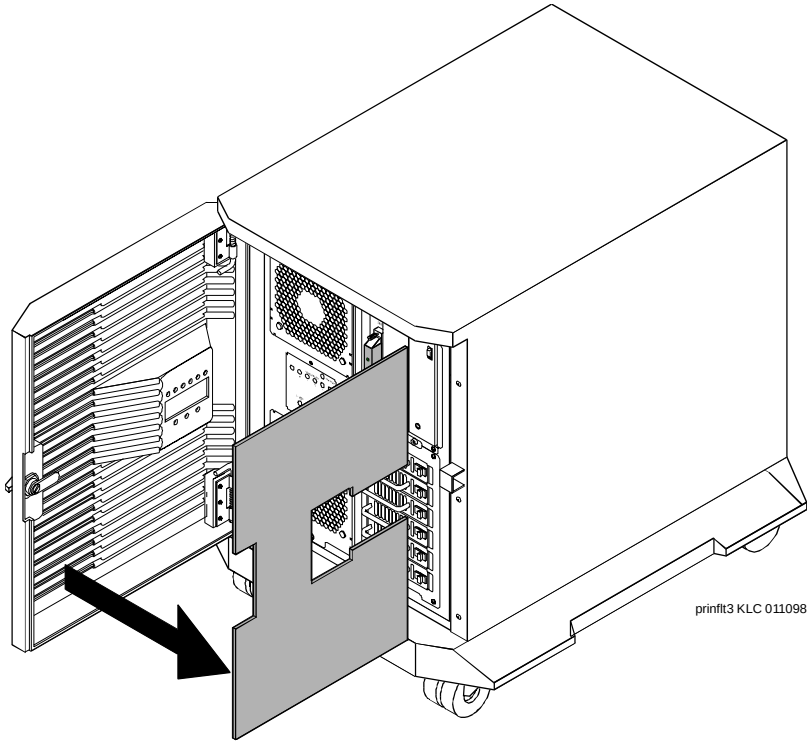

Figure 7-22. Removing the Fan Filter

Cleaning the Fan Filter

Clean the fan filter with mild soap and water. Allow the fan filter to thoroughly air dry replacement.

CAUTION:
Do not use heat to dry the filter and do not place a wet or damp filter into the MAP/100P.

Installing Fan Filters

To install a filter, position it behind the doors and press it into place.

Replacing the Fuse

The fuse is located in the lower rear portion of the MAP/100P (Figure 7-23).

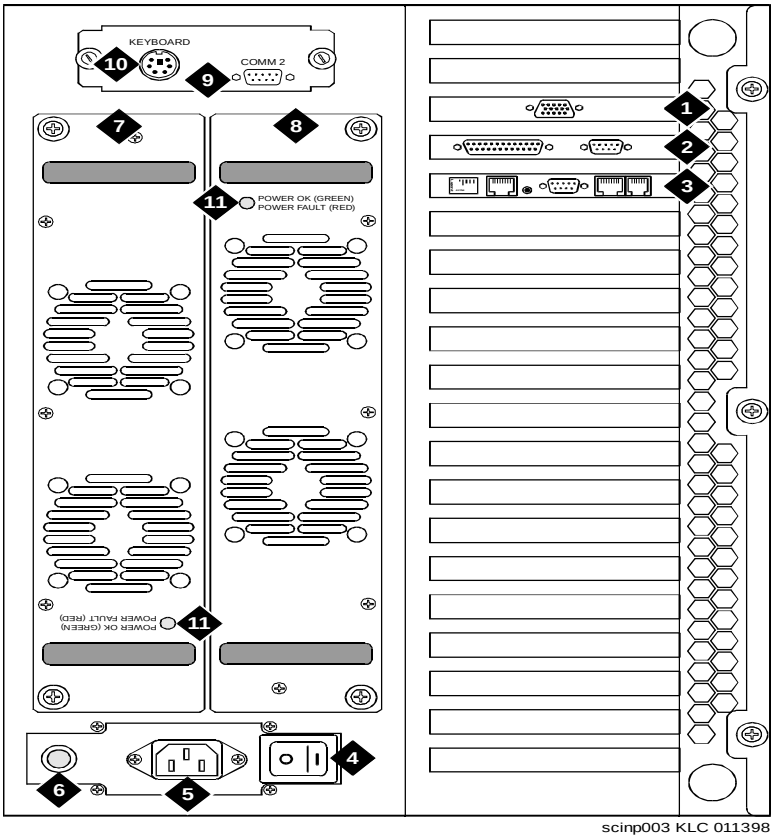

1.	Video circuit card	6.	Fuse
2.	P5 200 MHz CPU	7.	Power Supply 1
3.	Remote Maintenance card	8.	Power Supply 2
4.	Power ON/OFF switch	9.	COM2 port
5.	AC power input	10.	Keyboard connection

Figure 7-23. Rear View of the MAP/100P

The MAP/100P is equipped with either a domestic fuse or an international fuse depending on the location (Figure 7-24).

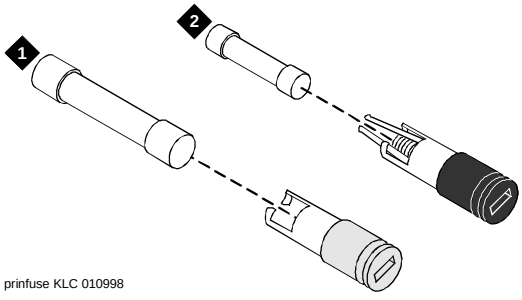

1. Domestic fuse and holder
2. International fuse and holder

Figure 7-24. Fuse Types

Removing the Fuse

To remove the fuse, do the following:

1. Verify that the replacement equipment is on site and appears to be in usable condition with no obvious shipping damage.
2. If the system is in service, perform the following steps.
   a. Stop the voice system. See "Stopping the Voice System," in Chapter 3, "Common System Procedures", for voice system administration.
   b. Shut down the voice system. See "Shutting Down the Voice System," in Chapter 3, "Common System Procedures", for voice system administration.
   c. Shut down the INTUITY CONVERSANT system. See "Shutting Down the Operating System," in Chapter 3, "Common System Procedures", for voice system administration.
3. Remove the incoming power. See "Removing Power from the MAP/100P", in Chapter 4, "Getting Inside the Computer", for this procedure.

   CAUTION:
   Do not turn the fuse holder more than 1/8-turn in any direction.

4. Using a screw driver, gently turn the fuse holder 1/8-turn counter-clockwise (Figure 7-25).

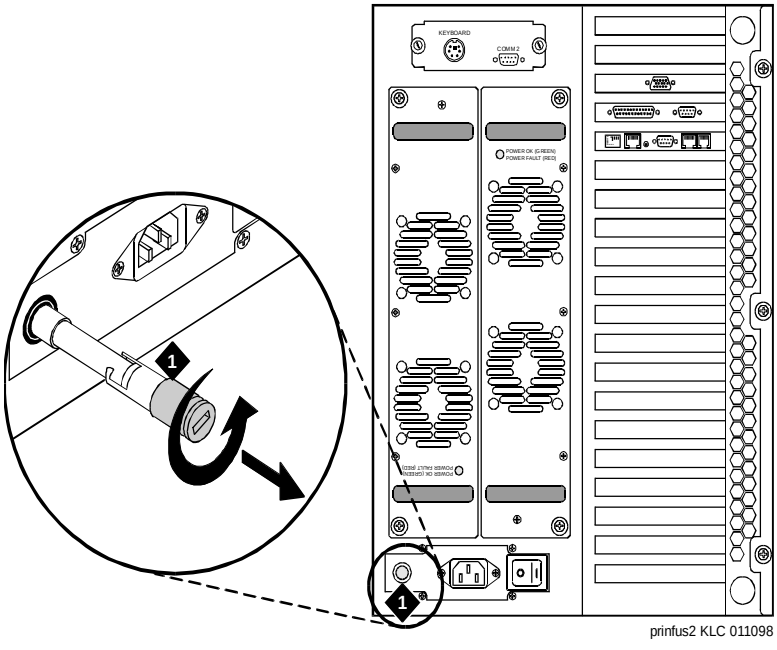

1. Fuse

Figure 7-25. Removing a Fuse

5. Remove the fuse from the fuse holder (Figure 7-24).

Installing the Fuse

CAUTION:

Make sure to replace the defective fuse with a fuse of identical type and rating. The type and rating are displayed on the fuse endcap.

To install the fuse do the following:

1. Place the fuse in the holder.
2. Place the fuse and holder in the MAP/100P.
3. Push the fuse in gently until you feel it make contact with the rear of the fuse slot.

CAUTION:
Do not turn the fuse holder more than 1/8-turn in any direction.

4. Gently turn the fuse holder 1/8-turn clockwise.
5. Apply power to the MAP/100P. See "Restoring Power to the MAP/100P", in Chapter 4, "Getting Inside the Computer", for this procedure.

Replacing the Hard Disk Drive Carriage

The hard disk drive carriage (Figure 7-5) holds the individual hard disk drive bracket assemblies in the MAP/100P.

Removing the Hard Disk Drive Carriage

To remove the hard disk drive carriage, do the following:

1. If the system is in service, perform the following steps.
   a. Stop the voice system. See "Stopping the Voice System," in Chapter 3, "Common System Procedures", for voice system administration.
   b. Shut down the voice system. See "Shutting Down the Voice System," in Chapter 3, "Common System Procedures", for voice system administration.
   c. Shut down the INTUITY CONVERSANT system. See "Shutting Down the Operating System," in Chapter 3, "Common System Procedures", for voice system administration.
2. Remove the incoming power. See "Removing Power from the MAP/100P", in Chapter 4, "Getting Inside the Computer", for this procedure.
3. Open the front door.
4. Remove the four hard disk drive carriage retaining screws (Figure 7-5).
5. Gently pull the hard disk drive carriage from the MAP/100P.
6. Remove the hard disk drive power cable from the hard disk drive carriage backplane (Figure 7-4).
7. Remove the SCSI bus cable from the hard disk drive carriage backplane (Figure 7-4).
8. Remove the SCSI ID cable from the hard disk drive carriage backplane (Figure 7-4).

Installing the Hard Disk Drive Carriage

To install the hard disk drive carriage, do the following:

1. Connect the hard disk drive power cable to the hard disk drive carriage backplane (Figure 7-4).
2. Connect the SCSI bus cable to the hard disk drive carriage backplane (Figure 7-4).
3. Connect the SCSI ID cable to the hard disk drive carriage backplane (Figure 7-4).
4. Place the hard disk drive carriage in the MAP/100P.
5. Secure the hard disk drive carriage with the four screws you removed in Step 4 of "Removing the Hard Disk Drive Carriage".
6. Close the front door.
7. Apply power to the MAP/100P. See "Restoring Power to the MAP/100P", in Chapter 4, "Getting Inside the Computer", for this procedure.

Replacing the Memory Modules

This section describes:

- The memory available with the MAP/100P
- How to determine if the memory modules are damaged
- How to replace the memory

WARNING:
Observe proper electrostatic discharge precautions when you handle computer components. Wear an antistatic wrist strap that touches your bare skin and connect the strap cable to an earth ground. See "Protecting against Damage from Electrostatic Discharge", in Chapter 4, "Getting Inside the Computer".

Memory and SIMM Description

The MAP/100P supports 96 Mbytes of memory for the P5 200 MHz CPU circuit card. The memory is packaged on single in-line memory modules (SIMM). These modules are placed in sockets located in the top left corner of the CPU circuit card (Figure 7-26).

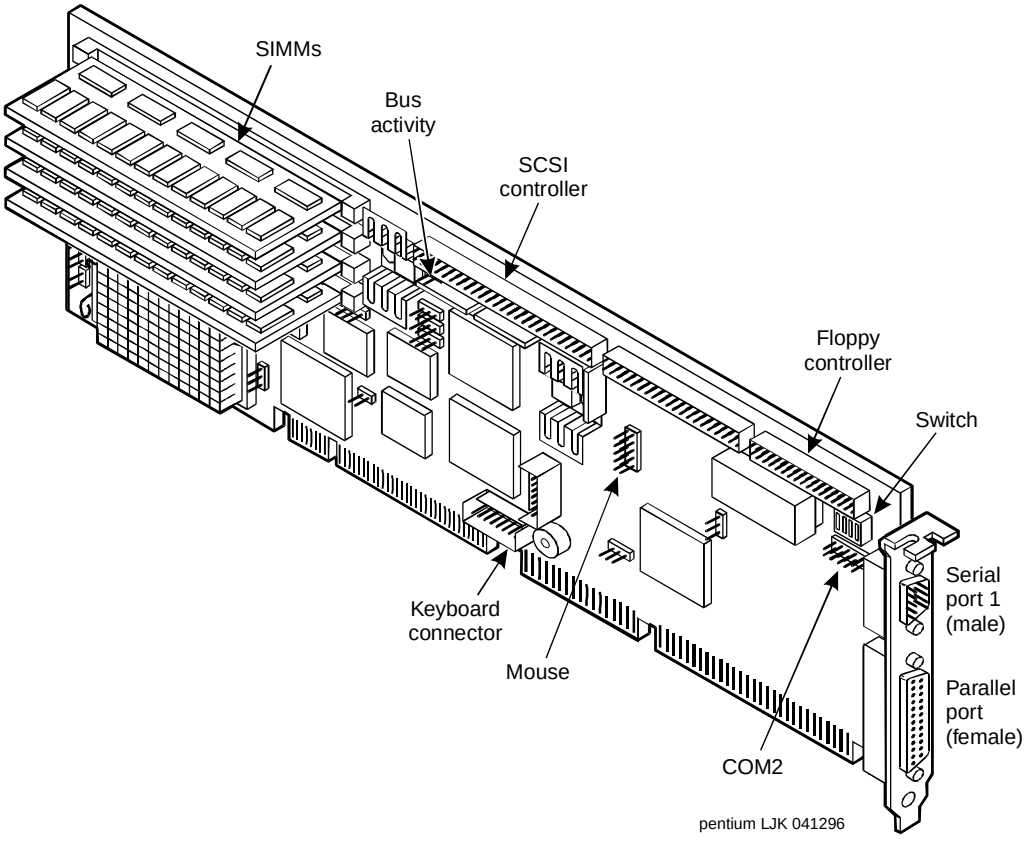

Figure 7-26. CPU Circuit Card SIMM Location

The SIMMs must be installed on the CPU using the following rules:

- All SIMMs must be either -6, 60nS or -7, 70nS speed rating.
- SIMMs must be in matched pairs.
- SIMM1 and SIMM2 must both be equipped.
- SIMM1 and SIMM2 must be identical (same part number, speed, size, vendor).
- If SIMM3 and SIMM4 are equipped they must be identical. SIMM3 and SIMM4 can be different than SIMM1 and SIMM2.

The SIMMs must be in one of the following 2configurations:

- 32 Mbytes consisting of 2 identical 16-Mbyte SIMMs located in the SIMM1 and SIMM2 sockets.
- 64 Mbytes consisting of 2 identical 32-Mbyte SIMMs located in the SIMM1 and SIMM2 sockets.

- 64 Mbytes consisting of 2 identical 16-Mbyte SIMMs located in the SIMM1 and SIMM2 sockets and 2 identical 16-Mbyte SIMMs located in the SIMM3 and SIMM4 sockets.
- 96 Mbytes consisting of 2 identical 32-Mbyte SIMMs located in the SIMM1 and SIMM2 sockets and 2 identical 16-Mbyte SIMMs located in the SIMM3 and SIMM4 sockets.
- 128 Mbytes consisting of 2 identical 32-Mbyte SIMMs located in the SIMM1 and SIMM2 sockets and 2 identical 32-Mbyte SIMMs located in the SIMM3 and SIMM4 sockets.

NOTE:
The INTUITY CONVERSANT system will not boot if there is an odd number of SIMMs.

Identifying a Damaged SIMM

To determine which of the SIMMs is defective, you must test each pair. One pair of SIMMs must be removed and the system then rebooted using the remaining SIMMs to obtain a reading on the amount of memory available.

Checking for Proper SIMM Seating

To check for proper SIMM seating, do the following:

1. Verify that the replacement equipment is on site and appears to be in usable condition, with no obvious shipping damage.
2. If the system is in service, perform the following steps.
   a. Stop the voice system. See "Stopping the Voice System," in Chapter 3, "Common System Procedures", for voice system administration.
   b. Shut down the voice system. See "Shutting Down the Voice System," in Chapter 3, "Common System Procedures", for voice system administration.
   c. Shut down the INTUITY CONVERSANT system. See "Shutting Down the Operating System," in Chapter 3, "Common System Procedures", for voice system administration.
3. Remove power from the MAP/100P. See "Removing Power from the MAP/100P" in Chapter 4, "Getting Inside the Computer", for power removal procedures.
4. Access the circuit card cage. See "Accessing the Circuit Card Cage", in Chapter 4, "Getting Inside the Computer", for the procedure.
5. Carefully remove the CPU circuit card. See "Removing a Circuit Card", in Chapter 5, "Replacing, Installing, or Upgrading Circuit Cards", for more information on removing the CPU circuit card.

6. Verify that all SIMMs are properly seated in their slots. If all are properly seated, continue with the next procedure "Checking for Defective SIMMS."

   If one or more of the SIMMs are not properly installed or seated, do the following.

   a. Properly seat the SIMM.

   b. Replace the CPU circuit card. See "Installing a Circuit Card", in Chapter 5, "Replacing, Installing, or Upgrading Circuit Cards", for the procedure.

   c. Reboot the system. See "Rebooting the UNIX System," in Chapter 3, "Common System Procedures", for voice system administration.

      If the system shows an amount of memory equal to that installed on the card, the problem has been corrected.

      If the system shows an amount of memory less than that installed on the card, continue with the next procedure, "Checking for Defective SIMMS."

Checking for Defective SIMMs

To check for defective SIMMs, do the following:

1. Remove one pair of the SIMMs. See "Removing SIMMs", below for more information on removing the SIMMs.

   If the CPU circuit card is equipped with only one pair of SIMMS the pair must be replaced. See "Installing SIMMs", below for more information on installing the new pair of SIMMs.

2. Reinstall the CPU circuit card. See "Installing a Circuit Card", in Chapter 5, "Replacing, Installing, or Upgrading Circuit Cards", for the procedure.

3. Restore power to the MAP/100P. See "Restoring Power to the MAP/100P", in Chapter 4, "Getting Inside the Computer", for more information on restoring the power.

4. Reboot the system. See "Rebooting the UNIX System," in Chapter 3, "Common System Procedures", for voice system administration.

5. Verify the amount of memory as the system reboots.

6. If the amount of memory shown by the system is not equal to the amount of memory still installed on the card, one of the remaining SIMMS is defective. Complete Steps a through c. If the memory is not correct continue with Step 7.

   a. Remove power from the MAP/100P. See "Removing Power from the MAP/100P", in Chapter 4, "Getting Inside the Computer", for more information on removing the power.

   b. Replace the SIMMs which were removed in Step 1. See "Installing SIMMs", below for more information on replacing the SIMM.

   c. Return to Step 1 and continue, removing the second pair of SIMMs.

7. If the amount of memory shown by the system equals the amount of memory still installed on the card, one of the SIMMs you removed is defective. Replace the pair with a new pair of SIMMs. See "Installing SIMMs", below for more information.
8. Replace the dress covers. See "Replacing the Dress Cover", in Chapter 4, "Getting Inside the Computer", for the procedure.
9. Apply power to the unit. See "Restoring Power to the MAP/100P", in Chapter 4, "Getting Inside the Computer", for the procedure.

Removing SIMMs

To remove a SIMM, do the following:

1. Verify that the new/replacement SIMMs are on site and appear to be in usable condition.
2. Shut down the system. See "Shutting Down the Operating System," in Chapter 3, "Common System Procedures", for the procedure.
3. Remove the incoming power. See "Removing Power from the MAP/100P", in Chapter 4, "Getting Inside the Computer", for this procedure.
4. Access the circuit card cage. See "Accessing the Circuit Card Cage", in Chapter 4, "Getting Inside the Computer", for the procedure.
5. Remove the CPU circuit card. See "Removing a Circuit Card" in Chapter 5, "Replacing, Installing, or Upgrading Circuit Cards", for more information on removing the CPU circuit card.
6. Lay the CPU circuit card on a flat, clean, ESD-protected surface.
7. Release the metal snap locks gently at the edge of the SIMM connectors.
8. Rotate the SIMM back and downward to approximately a 60-degree angle.
9. Remove the SIMM.

Installing SIMMs

To install a SIMM, do the following:

1. Shut down the system. See "Shutting Down the Operating System," in Chapter 3, "Common System Procedures", for the procedure.
2. Remove the incoming power. See "Removing Power from the MAP/100P", in Chapter 4, "Getting Inside the Computer", for this procedure.
3. Access the circuit card cage. See "Accessing the Circuit Card Cage", in Chapter 4, "Getting Inside the Computer", for the procedure.
4. Remove the CPU circuit card. See "Removing a Circuit Card", in Chapter 5, "Replacing, Installing, or Upgrading Circuit Cards", for this procedure.

5. Install the SIMM by positioning the new SIMM at approximately a 60-degree angle with respect to the CPU circuit card.

   All SIMMs are keyed to prevent them from being inserted incorrectly.

   NOTE:
   Install a new SIMM in the slot adjacent to the last SIMM installed. Do not leave any empty sockets between SIMMS.

6. Push down at that angle until the SIMM is reset into the SIMM carrier.
7. Snap the SIMM into place by rotating it to an upright position.

   The metal snap lock on the ends of the connector for the SIMM will be forced open and then lock when in the upright position.

8. Ensure the connector guide pins are seated into the clearance holes provided at each end of the SIMM.

   When properly seated, the guides should be fully extended into the circuit card clearance holes.

9. Reinstall the CPU circuit card. See "Removing a Circuit Card", in Chapter 5, "Replacing, Installing, or Upgrading Circuit Cards", for this procedure.
10. Reboot the system. See "Rebooting the UNIX System," in Chapter 3, "Common System Procedures", for voice system administration.
11. Verify the amount of memory as the system reboots.
12. Replace the dress covers. See "Replacing the Dress Cover", in Chapter 4, "Getting Inside the Computer", for the procedure.
13. Apply power to the MAP/100P. See "Restoring Power to the MAP/100P", in Chapter 4, "Getting Inside the Computer", for this procedure.

Replacing the Power Supply

The MAP/100P may be equipped with either one or two power supplies. In either case, the power supply module assembly with redundant power supply capability is not equipped with an internal UPS.

The MAP/100P has the power supplies located in positions Power Supply 1 and Power Supply 2 (Figure 7-23).

CAUTION:
Do not operate the MAP/100P for extended periods without both positions, PS1 and PS2, being equipped with a power supply.

The power supplies installed in the MAP/100P automatically sense whether the incoming voltage is 110 or 220 VAC. There are no manual adjustments necessary to prepare the power supply for the incoming voltage.

The power supplies attach to a backplane in the MAP/100P using a male connector and a backplane receptacle (Figure 7-27).

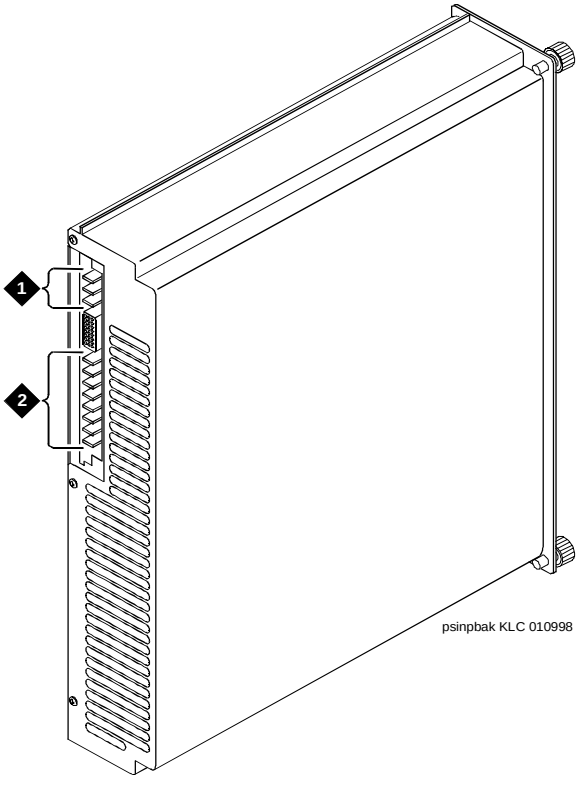

1. Grounding connectors
2. Power connectors

Figure 7-27. Power Supply Back View

Removing a Power Supply

To remove a power supply, do the following:

1. Verify that the replacement equipment is on site and appears to be in usable condition, with no obvious shipping damage.
2. If the system is in service, perform the following steps.
   a. Stop the voice system. See "Stopping the Voice System," in Chapter 3, "Common System Procedures", for voice system administration.
   b. Shut down the voice system. See "Shutting Down the Voice System," in Chapter 3, "Common System Procedures", for voice system administration.

c. Shut down the INTUITY CONVERSANT system. See "Shutting Down the Operating System," in Chapter 3, "Common System Procedures", for voice system administration.

3. Loosen the two thumbscrews that hold the power supply in the MAP/100P (Figure 7-28).

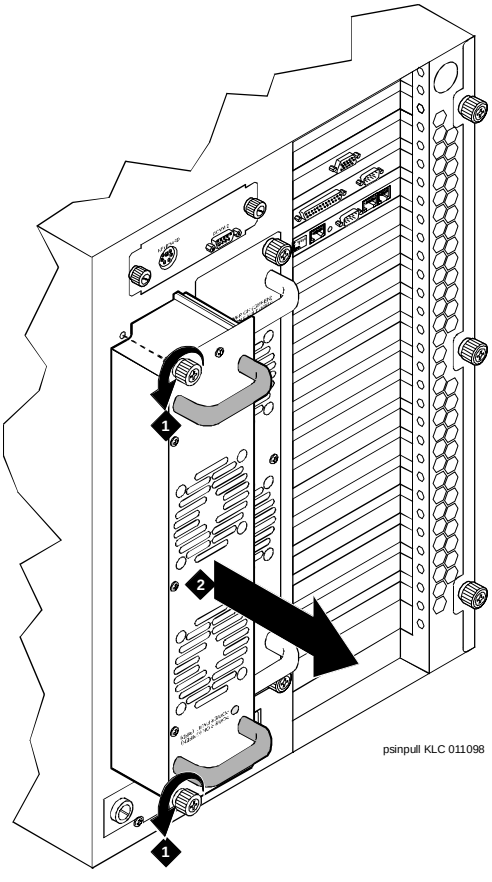

1. Retaining thumb screws

Figure 7-28. Removing a Power Supply

4. Grasp the power supply pull handles and pull the power supply from the MAP/100P.

5. Place the power supply to the side.

CAUTION:
It is important that the defective power supply be returned to the remote maintenance center in the same condition as it was in the Lucent INTUITY system. If the power supply is damaged during removal, packaging, or shipping adequate failure analysis can not be conducted.

Installing a Power Supply

To install a power supply, do the following:

1. Align the power supply with the slot in the MAP/100P.
2. Slide the power supply into the MAP/100P.
3. Apply pressure to ensure that the power supply is seated properly.
4. Tighten the two thumbscrews on the power supply.

NOTE:
Use a screwdriver to ensure that the thumbscrews are tight enough to properly seat the power supply.

5. Apply power to the MAP/100P. See "Restoring Power to the MAP/100P", in Chapter 4, "Getting Inside the Computer", for this procedure.
6. Make sure the power supply status indicator on the power supply is lit.

   This indicates the power supply is operational.

Replacing the Remote Maintenance Circuit Card Interface Board

The remote maintenance circuit card interface board (Figure 7-29) allows remote access to the MAP/100P. The remote maintenance circuit card interface board contains a keyboard connection and the COM2 port.

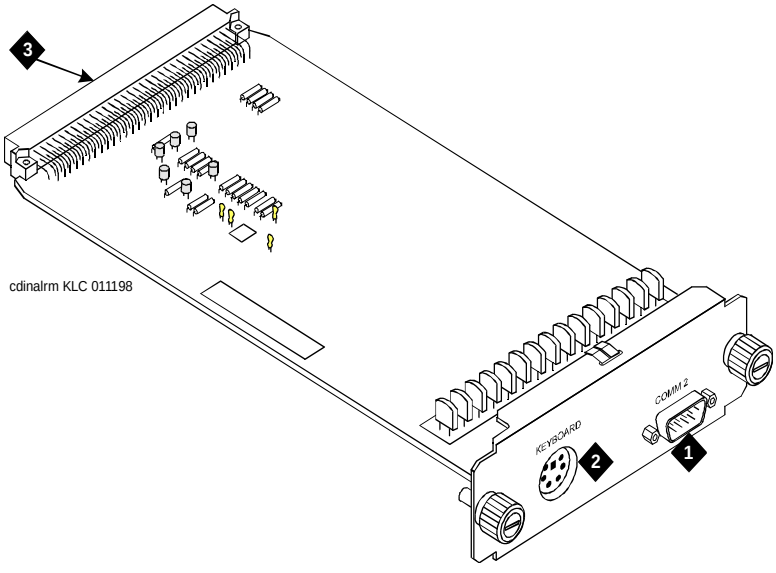

1. COM2 port
2. Keyboard connection
3. Power supply backplane connection

Figure 7-29. Remote Maintenance Circuit Card Interface Board

The remote maintenance circuit card interface board is located on the upper rear of the MAP/100P (Figure 7-23).

Removing the Remote Maintenance Circuit Card Interface Board

To remove the remote maintenance circuit card interface board, do the following:

1. Verify that the replacement equipment is on site and appears to be in usable condition with no obvious shipping damage.
2. If the system is in service, perform the following steps.
   a. Stop the voice system. See "Stopping the Voice System," in Chapter 3, "Common System Procedures", for voice system administration.
   b. Shut down the voice system. See "Shutting Down the Voice System," in Chapter 3, "Common System Procedures", for voice system administration.
   c. Shut down the INTUITY CONVERSANT system. See "Shutting Down the Operating System," in Chapter 3, "Common System Procedures", for voice system administration.

3. Remove the incoming power. See "Removing Power from the MAP/100P", in Chapter 4, "Getting Inside the Computer", for this procedure.
4. Disconnect the keyboard cable from the MAP/100P.
5. Disconnect any cable attached to the COM2 port.
6. Loosen the two thumbscrews on the remote maintenance circuit card interface board (Figure 7-29).
7. Pull the remote maintenance circuit card interface board out of the MAP/100P.

Installing the Remote Maintenance Circuit Card Interface Board

To install the remote maintenance circuit card interface board, do the following:

1. Align the remote maintenance circuit card interface board with the MAP/100P.
2. Gently slide the remote maintenance circuit card interface board into the MAP/100P until it (Figure 7-29) has properly mated with the power supply backplane.
3. Tighten the two thumbscrews on the remote maintenance circuit card interface board (Figure 7-29).

   Use a screwdriver to tighten the thumbscrews. This ensures a proper connection.
4. Connect the cable you removed from the COM2 port in Step 5 of "Removing the Remote Maintenance Circuit Card Interface Board", above if necessary.
5. Connect the keyboard cable to the MAP/100P.
6. Apply power to the MAP/100P. See "Restoring Power to the MAP/100P", in Chapter 4, "Getting Inside the Computer", for this procedure.

Replacing a Terminator SIP

If the circuit card is the last circuit card connected to either end of the TDM bus, you must ensure that the TDM bus terminator single in-line packages (SIPs) are in place on the circuit card. If the circuit card is not the last circuit card on the bus, you must remove the SIPs.

NOTE:
"Last circuit card connected" means that there are no other cards between the circuit card and the end of the bus. There may, however, be empty connectors.

To replace a terminator SIP, do the following:

1. Align the terminator SIP with the SIP socket on the circuit card (Figure 7-30).

   There are markings on both the terminator SIP and the circuit card which should be used to align the terminator SIP.

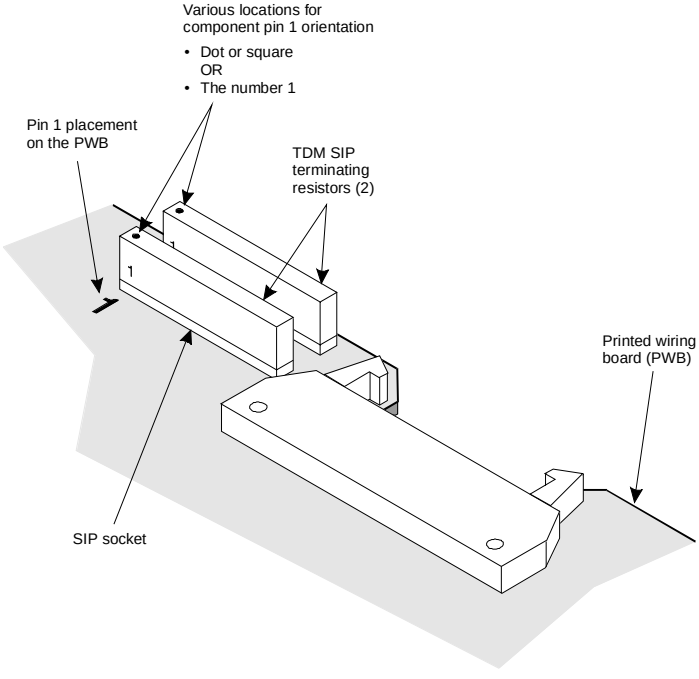

Figure 7-30. Replacing Terminator SIPs on the TDM Bus

2. Insert the terminator SIP.

You have completed this procedure.

Replacing the Tip/Ring Distribution Hardware

The Tip/Ring distribution hardware (Figure 7-31) comes in a kit which consists of:

- A 356B adapter
- An adapter bracket

- A mounting plate
- A 25-pair, high-density cable for the first 24 channels

NOTE:
An additional 25-pair, high-density cable is required for the second 24 channels to be supported by the distribution panel. Therefore, if you are connecting 48 channels, you will need another cable that is not part of this kit.

NOTE:
Two kits will have to be purchased to accommodate all 64 channels.

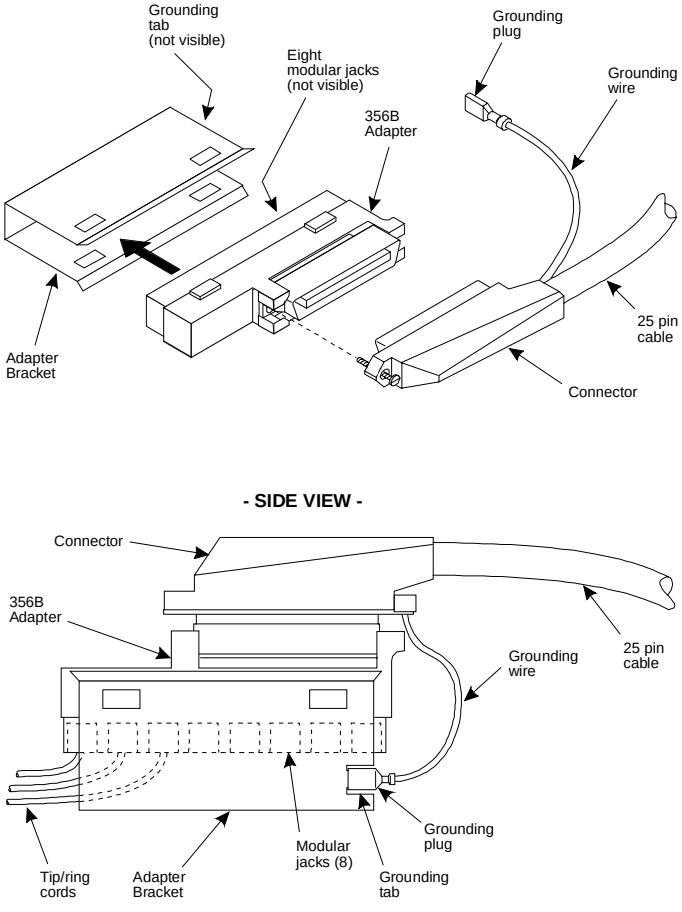

Figure 7-31. Tip/Ring Distribution Hardware Assembly

The Tip/Ring distribution hardware attaches to the rear bracket on the MAP/100P (Figure 7-32).

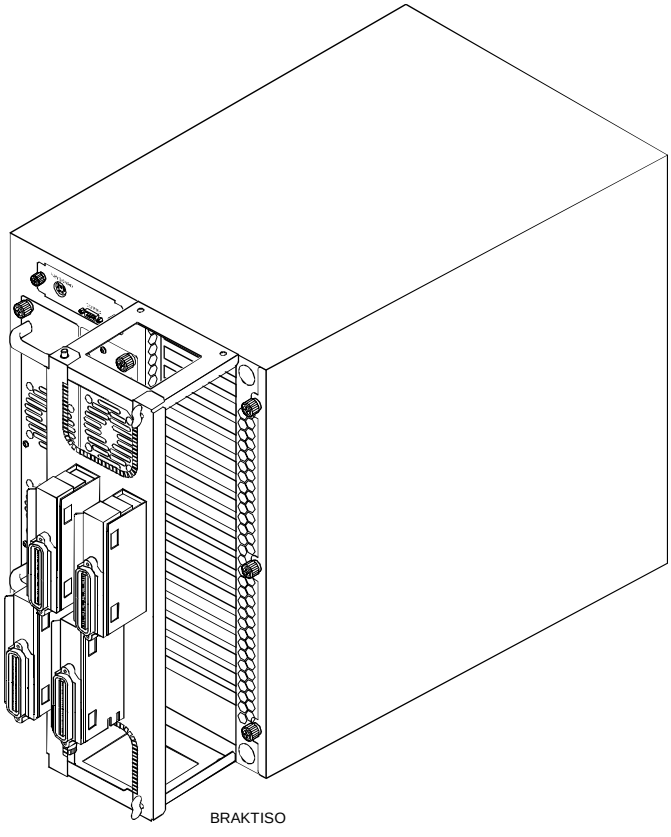

Figure 7-32. Tip/Ring Distribution Hardware on MAP/100P

Removing the Tip/Ring Distribution Hardware

To remove the Tip/Ring distribution hardware, do the following:

1. If the system is currently connected to the telephone network, notify the service provider that the system is about to be disconnected. The service provider will ask which extensions will be affected.
2. If the system is in service, perform the following steps.
   a. Stop the voice system. See "Stopping the Voice System," in Chapter 3, "Common System Procedures", for voice system administration.
   b. Shut down the voice system. See "Shutting Down the Voice System," in Chapter 3, "Common System Procedures", for voice system administration.

c. Shut down the INTUITY CONVERSANT system. See "Shutting Down the Operating System," in Chapter 3, "Common System Procedures", for voice system administration.

3. Remove the incoming power. See "Removing Power from the MAP/100P", in Chapter 4, "Getting Inside the Computer", for this procedure.
4. Loosen the screw that secures the 25-pin cable to the 356B adapter.
5. Disconnect the 25-pin cable from the 356B adapter.
6. Pull the 356B adapter from the mounting bracket.
7. Disconnect the Tip/Ring cables from the 356B adapter.

Installing the Tip/Ring Distribution Hardware

To install the Tip/Ring distribution hardware, do the following:

1. Verify that the distribution hardware is on site and appears to be in usable condition.
2. If the system is currently connected to the telephone network, notify the service provider that the system is about to be disconnected. The service provider will ask which extensions will be affected.
3. If the system is in service, perform the following steps.

   a. Stop the voice system. See "Stopping the Voice System," in Chapter 3, "Common System Procedures", for voice system administration.

   b. Shut down the voice system. See "Shutting Down the Voice System," in Chapter 3, "Common System Procedures", for voice system administration.

   c. Shut down the INTUITY CONVERSANT system. See "Shutting Down the Operating System," in Chapter 3, "Common System Procedures", for voice system administration.

4. Remove the incoming power. See "Removing Power from the MAP/100P", in Chapter 4, "Getting Inside the Computer", for this procedure.
5. Verify that all of the necessary components are included (Figure 7-31).
6. Secure the u-shaped adapter brackets to the mounting plate on the rear of the MAP/100P with the screws provided (Figure 7-32).

   The u-shape of the bracket should face out with the grounding lug towards the MAP/100P (Figure 7-33).

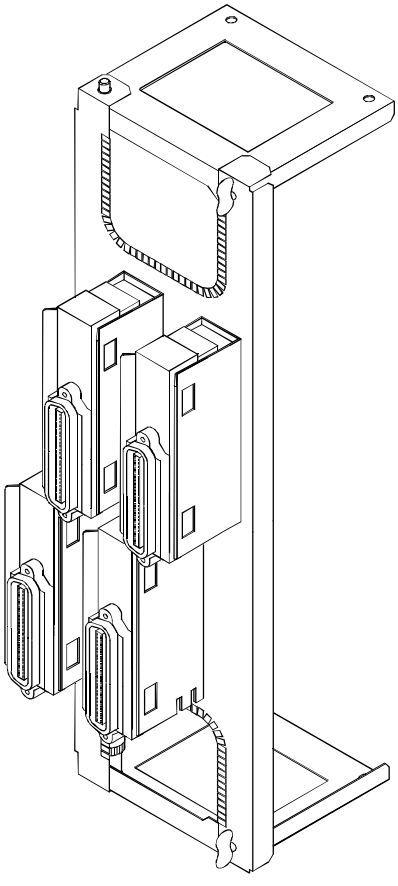

CBLBRAKT

Figure 7-33. Tip/Ring Distribution Hardware

7. Plug the 3-foot, 6-pin modular cords from the Tip/Ring cards into the 356B adapters. Each adapter can accommodate eight modular cords (Figure 7-31).
8. Using the connector provided, attach the 25-pair, high-density cable to the 356B adapter.
9. Snap the 356B adapters into the adapter bracket. Ensure the modular cords are inside the adapter bracket.

NOTE:
The 356B adapters can be removed by spreading the bracket sides apart.

CAUTION:
The 25-pair, high-density *cables should come from the top of the adapter brackets.*

10. Connect the grounding wire and strap to the top of the adapter bracket.
11. Apply power to the MAP/100P. See "Restoring Power to the MAP/100P", in Chapter 4, "Getting Inside the Computer", for this procedure.
12. Notify the service provider that the system is back on-line, if necessary.

Installing Base System Software

8

Overview

This chapter describes the installation procedures for the UnixWare operating system software.

Purpose

This purpose of this chapter is to provide the information necessary to reload the operating system on a computer that has experienced a disk failure. Use this chapter in conjunction with Appendix D, “Disaster Recovery Checklists”.

NOTE:
The installer must have the root password to complete this procedure.

Installing Base System Software

NOTE:
Installing the UnixWare operating system unmounts file systems. If this software is being loaded onto a system that has clean hard disks that have not been previously loaded, the system will not detect file systems. If this is a recovery installation, the system will detect previously loaded file systems.

Beginning the UnixWare Installation

To load software onto a new or used disk, do the following:

1. Insert the diskette labeled "UnixWare for INTUITY Boot Floppy 1" into the diskette drive. See "Inserting and Removing Diskettes" in Chapter 3, "Common System Procedures," for the procedure.
2. If the system is off. See "Removing Power from the MAP/100P" in Chapter 4, "Getting Inside the Computer"," for the procedure.

   If the system is on, reboot the system. See "Rebooting the UNIX System" in Chapter 3, "Common System Procedures," for the procedure.

   The system displays the UnixWare introduction screen as it begins to load the base system software. When the system has loaded the first boot floppy it displays the following message:

   ```
   Remove the diskette labeled 'Boot Floppy 1 of 3'.

   If you have a diskette labeled 'Host Bus Adapter
   Drivers', insert that diskette now.

   For more information on Host Bus Adapter diskettes, see
   the UnixWare Installation Handbook.

   Otherwise, if you do not have (or do not need to use) a
   Host Bus Adapter diskette, insert the diskette labeled
   'Boot Floppy 2 of 3' now.

   Press 'ENTER' to continue.
   ```
3. Remove the diskette labeled "UnixWare for INTUITY Boot Floppy 1" from the diskette drive.
4. If you are installing UnixWare on a system with a P5 CPU, insert the diskette labeled "HBA Floppy" into the diskette drive. See "Inserting and Removing Diskettes" in Chapter 3, "Common System Procedures," for the procedure.

   CAUTION:
   If you are installing UnixWare on a system with a 486 CPU, skip Steps 5 and 6 and continue with Step 7.

5. Press ENTER.

   The system displays the Remove Host Bus Adapter Disk screen (Figure 8-1).

```
The Host Bus Adapter driver(s) on the Host Bus Adapter diskette
have been loaded and you can now remove the diskette.

If you have another Host Bus Adapter diskette (for different
adapters) insert that disk now.

For more information on Host Bus Adapter diskettes, see the
UnixWare Installation Handbook.

Otherwise, if you do not have (or do not need to use) another Host
Bus Adapter diskette, insert the diskette labeled 'Boot Floppy 2
of 3' now.





Press 'Enter' to continue.
```

Figure 8-1. Remove Host Bus Adapter Disk Screen

6. Remove the diskette labeled "HBA Floppy" from the diskette drive. See "Inserting and Removing Diskettes" in Chapter 3, "Common System Procedures," for the procedure.
7. Insert the diskette labeled "UnixWare for INTUITY Boot Floppy 2" into the diskette drive. See "Inserting and Removing Diskettes" in Chapter 3, "Common System Procedures," for the procedure.
8. Press ENTER.

   The system displays the following message:

   `Continuing UnixWare installation...`

   After approximately 2 minutes the system displays the Introduction screen (Figure 8-2).

```
Welcome to the UnixWare installation process!

If you have never installed UnixWare before, it is
recommended that you press the 'F1' (or '?') key now to
learn more about the installation process and the hardware
requirements of UnixWare.

-Pressing the 'F1' (or '?') key at any time during
 installation will display more information or help.

-Pressing the 'Del' key at any time cancels the
installation.

Press the 'F1' (or '?') key for more information or
'ENTER' to continue.
```

Figure 8-2. Introduction Screen

CAUTION:
If you use the [DELETE] key to stop the UnixWare installation at any time during this process, you will have to restart the software installation process at Step 1.

NOTE:
If the system displays a message that the system must have at least 60 MByte of space in the hard disk drive to install UNIX, the hard disk drive is experiencing problems. The cable may not be connected, or the hard disk drive may be damaged. Power down the system and check the hard disk drive cables. See "Removing Power from the MAP/100P" in Chapter 4, "Getting Inside the Computer," for the procedure.

9. Press [ENTER].

   If Disk 0 has been replaced with a new hard disk drive, the system displays the UnixWare Installation Files Deleted Warning screen (Figure 8-3). Press [ENTER] and continue with the next procedure, "Setting Up the UnixWare Environment."

If the system does not display the UnixWare Installation Files Deleted Warning, continue with the next procedure, "Setting Up the UnixWare Environment."

```
WARNING: Files have been detected in the active
partition(s) of your hard disk(s).

In order to install the operating system, you must have an
active UNIX partition occupying 100% of your hard disk. No
other partitions may share the disk.

You have the option of removing the existing partitions at
this point and creating a new UNIX partition. You should
only remove the existing partitions if you don't want to
save any files on your disk.

If you elect to abort the installation, the existing
partitions will not be removed and installation will be
halted.

1. Destroy existing partitions and create a new UNIX
partition.

2. Abort the installation, leaving existing partitions
untouched.

Type '1' or '2' followed by 'ENTER':1
```

Figure 8-3. UnixWare Installation Files Deleted Warning Screen

Setting Up the UnixWare Environment

To set up the UnixWare Environment, complete the following:

1. Starting at the Introduction Screen (Figure 8-2), press ENTER.

   The system displays the Keyboard Setup screen (Figure 8-4).

```
The UnixWare installation procedure supports the following
international keyboards. You may select alternate keyboard types
by using the left and right arrow keys and then press the 'ENTER'
or 'RETURN' key.

Keyboard Nationality:

                    [ Apply ]        [ Reset ]

When Finished, move the cursor to "Apply and then press 'Enter' to
continue.
```

Figure 8-4. Keyboard Setup Screen

2. Use the left ◄ and right ► arrows on your keyboard to move through the field selections.
3. Select `U.S. ASCII`.
4. Press the down ▼ arrow to move to the `Apply` field and press ENTER.

   The system displays the Configure Date and Time screen (Figure 8-5).

```
On this screen, you will check the current date and time that is
set on your computer and change them if necessary. You also select
what timezone configuration you require. Either set a continent(s)
which will lead you onto a further screen with locations or manual
entry for a custom timezone.


    The current date:
    The current Time:
    Enter the current year:
    Enter the month of the year:
    Enter the day of the month:
    Enter the hour of the day:
    Enter the minute of the hour:
    Timezone configuration:

                          [ Apply ]        [ Reset ]



Press 'TAB' to move the cursor between fields. When finished, move
the cursor to 'APPLY' and then press 'ENTER' to continue.
```

Figure 8-5. Configure Date and Time Screen

5. Use the left ◄ and right ► arrows on your keyboard to move through the field selections. Use the down ▼ arrow to move to the next field.
6. Select the appropriate data for each field.
7. Press the down ▼ arrow to move to the `Apply` field and press ENTER.

   The system displays the Continent Location Choice screen (Figure 8-6).

```
On this screen you choose the country/location you are in, having
already selected the continent. To go back to the continent screen
select 'BACK ONE SCREEN'. Use the left and right arrow keys.



Location

                                  Apply          Reset



Press 'TAB' to move the cursor between fields. When finished, move
the cursor to 'APPLY' and then press 'ENTER' to continue.
```

Figure 8-6. Continent Location Choice Screen

8. Use the left ◄ and right ► arrows on your keyboard to move through the field selections.
9. Select the appropriate data for each field.
10. Press the down ▼ arrow to move to the `Apply` field and press ENTER.

    The system displays the Primary Hard Disk Partitioning screen (Figure 8-7).

```
In order to install UnixWare, you must reserve a partition (a
portion of your hard disk's space) on your primary hard disk for
the UNIX System.After you press 'ENTER' you will be shown a screen
that will allow you to create new partitions, delete existing
partitions or change the active partition of your primary hard
disk (the partition that your computer will boot from).

WARNING: All files in any partition(s) you delete will be
destroyed. If you wish to attempt to preserve any files from an
existing UNIX System, do not delete its partition(s).

The UNIX System partition that you intend to use on the primary
hard disk must be at least 120 MBs and labeled 'ACTIVE.'
```

Figure 8-7. Primary Hard Disk Partitioning Screen

11. Continue with the next procedure, "Initializing the Hard Disk Drives."

Initializing the Hard Disk Drives

To partition the hard disk drives, do the following:

1. Starting at the Primary Hard Disk Partitioning screen (Figure 8-7), press [ENTER].

   The system displays the Hard Disk Partitioning, Disk 1 screen (Figure 8-8).

.

```
Total disk size is 2048 cylinders (2048.0MB)
```

Partition	Status	Type	Start	End	Length	%	Approx MB
1	Active	UNIX System	0	2047	2048	100	2048.0

```
1. Overwrite system master code
2. Delete a partition
3. Exit (Update disk configuration and exit)
4. Cancel (Exit without updating disk configuration)
```

Figure 8-8. Hard Disk Partitioning, Disk 1 Screen

2. Enter **3**

   If you have a second hard disk drive, the system displays the Secondary Hard Drive Partitioning Screen (Figure 8-9).

   If you do not have a second hard disk drive, skip Steps 3 through 22 and continue with Step 23.

```
You may use a partition of your secondary hard disk.  If you
choose to use a partition of your secondary hard disk you will be
shown a screen that will allow you to partition your secondary
hard disk.

WARNING: All files in any partition(s) you delete will be
destroyed.

If you choose to create a UNIX System partition on your secondary
hard disk, it must be at least 40 MBs.

Your Options are:

1.  Do not use a partition of the secondary hard disk for
    the UNIX System.
2.  Use a partition of the secondary hard disk for the
    UNIX System.

Press ‘1’ or ‘2’ followed by ‘ENTER’.
```

Figure 8-9. Secondary Hard Disk Partitioning Screen

3. Enter **1**

   The system displays the Installation Type Selection screen (Figure 8-10).

```
You must choose a system type. The system type you choose will
determine the default file system sizes you will specify on the
next screen.

Press the 'F1' or '?' key to see more information about these
different system types.

    Platform Type:
    CPU Type:
    Offer Type:


                          Apply          Reset


Press 'TAB' to move between fields.  Press 'ENTER' to apply
fields.
```

Figure 8-10. Installation Type Selection Screen

4. Use the left ◄ and right ► arrows on your keyboard to move through the field selections. Use the down ▼ arrow to move to the next field.
5. Select the appropriate data for each field as specified in Table 8-1.

Table 8-1. Installation Type Selection Screen Entries

Field	Setting
`Platform type:`	MAP/100
`CPU type:`	P5 120 MHz or 486
`Offer type:`	INTUITY™ CONVERSANT®

6. Press the down ▼ arrow to move to the `Apply` field and press ENTER.

   The system displays the UnixWare Installation Set Slice Sizes screen (Figure 8-11).

```
You have selected the MAP/100 system. Now you must specify the
sizes of the filesystem slices. The recommended sizes for a MAP/x
system are provided as defaults on this screen. Press the 'F1' or
'?' key to see more information about these different system
types.

                      Size of / in MB: xx
                 Size of /stand in MB: xx
              Size of /dev/dump in MB: xx
              Size of /dev/swap in MB: xx
                   Size of mtce in MB: xx
                    Size of /vs in MB: xx
                Size of /oracle in MB: xx
                   Size of /tmp in MB: xx
                Size of /voice1 in MB: xx

                        Apply        Reset

Megabytes in active partition: Disk 1 - 2047
```

Figure 8-11. UnixWare Installation Set Slice Sizes Screen

7. Use the left ◄ and right ► arrows on your keyboard to move through the field selections. Use the down ▼ arrow to move to the next field.
8. Enter the appropriate number of megabytes of space needed for each slice as specified in Table 8-2.

NOTE:
The sizes listed in Table 8-2 are the recommended sizes. If you are loading a system using a mkimage tape, use the sizes on the tape label. If there are no sizes, use the recommended size. If you are loading a new system, without a mkimage tape, use the recommended sizes.

Table 8-2. Space Requirements for the MAP/100

Slice	Space Requirements (MBytes)	
	1.7-Gbyte Hard Disk Drive	2.0-Gbyte Hard Disk Drive
/	500	715
/stand	15	15
/dev/dump	65	65
/dev/swap	65	65
mtce	20	20
/vs	200	200
/oracle	200	200
/tmp	20	20
/voice1	500	600

9. Press the down ▼ arrow to move to the `Apply` field and press ENTER.

   The system displays the Hard Disk Surface Analysis screen (Figure 8-12).

```
Surface analysis is recommended but not required.   Here you must
choose to skip or perform surface analysis.

Press the 'F1' or '?' key to see more information about these
different system types.









You choices are:

1. Perform surface analysis
2. Skip surface analysis

Press '1' or '2' followed by 'ENTER':1
```

Figure 8-12. Hard Disk Surface Analysis Screen

CAUTION:
Ignore the message at the top of this screen. Surface analysis is required for all systems because it makes a configuration change to the disk. Failure to perform surface analysis may cause the INTUITY CONVERSANT system to fail.

10. Continue with the next procedure, "Transferring the UnixWare Files."

Transferring the UnixWare Files

To transfer the UnixWare files, do the following:

1. Starting at the Hard Disk Surface Analysis Screen (Figure 8-12), press ENTER.

   This will accept the default of 1 and perform the surface analysis. The system displays the following message:

   `Checking the hard disk for defects and creating file systems. This will take a few minutes. Please wait.`

   The system displays the following message:

```
Copying Unix System files from the diskette onto your
hard drive. This will take a few minutes. Please wait.
```

The system then clears the screen and displays the following message:

```
Making file systems on your hard disk.  This will take a
few minutes.  Please wait
```

After approximately 10 minutes the system displays the Exchange Diskette screen (Figure 8-13).

```
Remove the diskette from the drive and insert the diskette
labeled “Boot Floppy 3 of 3” now.

Press ‘Enter’ to continue.
```

Figure 8-13. Exchange Diskette Screen

2. Remove the diskette labeled “UnixWare for INTUITY Boot Floppy 2” from the diskette drive. See “Inserting and Removing Diskettes” in Chapter 3, “Common System Procedures,” for the procedure.
3. Insert the diskette labeled “UnixWare for INTUITY Boot Floppy 3” into the diskette drive. See “Inserting and Removing Diskettes” in Chapter 3, “Common System Procedures,” for the procedure.
4. Press (ENTER).

   The system displays the following message:

   ```
   Copying Unix System files from the diskette onto your
   hard drive. This will take a few minutes. Please wait.
   ```

   The system then displays the following message:

```
Making file systems on your hard disk.  This will take a
few minutes.  Please wait
```

The system displays the Remove Diskette Screen (Figure 8-14).

```
Remove boot floppy 3 of 3 from the drive now.

Press 'Enter' to continue.
```

Figure 8-14. Remove Diskette Screen

5. Remove the diskette labeled "UnixWare for INTUITY Boot Floppy 3" from the diskette drive. See "Inserting and Removing Diskettes" in Chapter 3, "Common System Procedures," for the procedure.
6. Continue with the next procedure, "Installing the Application Server."

Installing the Application Server

To Install the application server, do the following:

1. Starting at the Remove Diskette screen (Figure 8-14), press ENTER.

   The system displays the Application Server Media Type screen (Figure 8-15).

```
The Application Server software is available on diskette or tape
or network server.  You must select the source you will use to
install the software.









Your choices are:

1. Diskette Drive 1
2. Unixware for Intuity CONVERSANT
3. Network Install Server
4. Intuity Image/Snap Tape

Press a number between ‘1’ and ‘4’ followed by 'ENTER':
```

Figure 8-15. Application Server Media Type Screen

2. Insert the cartridge tape labeled “INTUITY CONVERSANT VIS V6.0 UnixWare for INTUITY 1.1.2” into the tape drive. See “Inserting and Removing Cartridge Tapes” in Chapter 3, “Common System Procedures,” for the procedure.
3. Enter **2**

   The system displays the Insert Tape screen (Figure 8-16).

```
Please insert the Application Server cartridge tape into the tape
drive and press 'ENTER'.









Your choices are:

1. The tape has been inserted in the tape drive.
2. Go back to previous menu.

Press '1' or '2' followed by 'ENTER':
```

Figure 8-16. Insert Lucent INTUITY Tape Screen

4. Press ENTER.

   This will accept the default of 1 to indicate the tape has been inserted and is ready for access.

   The system displays the following message:

   ```
   Installation in progress.  This will take several
   minutes.  Please do not remove the tape.
   ```

   After a few minutes the system displays a verification screen (Figure 8-17).

```
The following packages are included in this set for this release.
Select “Yes” in the install column for the packages you wish to
install.

                        Package Name    Install?
        ----------------------------    --------
                         Base System      Yes
                     Printer Support      Yes
           Network Support Utilities      Yes
  Enhanced Application Compatibility      Yes
                  Graphics Utilities      Yes
            Adobe Type Manager (TM)       Yes
                     Desktop Manager      Yes
                   Advanced Commands      Yes

                          Apply          Reset


Press ‘TAB’ to move between fields.  Press ‘ENTER’ to apply
fields.
```

Figure 8-17. Verification Screen

5. Select the packages as shown in Figure 8-17.

   Use the left ◄ and right ► arrows on your keyboard to move through the field selections. Use the down ▼ arrow to move to the next field.

6. Press the down ▼ arrow to move to the `Apply` field and press ENTER.

   The system displays another verification screen (Figure 8-18).

```
The following packages are included in this set for this release.
Select “Yes”in the install column for the packages you wish to
install.

                        Package Name    Install?
        ----------------------------    --------
                  Networked Graphics      Yes
                                OA&M      Yes
         Extended Backup and Restore      Yes
                  Terminfo Utilities      Yes
                   BSD Compatibility      No
              Applications and Demos      Yes
                 Netware UNIX Client      No
               Motif Runtime Package      Yes

                          Apply         Reset


Press ‘TAB’ to move between fields.  Press ‘ENTER’ to apply
fields.
```

Figure 8-18. Verification Screen

7. Select the packages as shown in Figure 8-18.

   Use the left ◄ and right ► arrows on your keyboard to move through the field selections. Use the down ▼ arrow to move to the next field.

8. Press the down ▼ arrow to move to the `Apply` field and press ENTER.

   The system displays another verification screen (Figure 8-19).

```
The following packages are included in this set for this release.
Select “Yes”in the install column for the packages you wish to
install.

                        Package Name    Install?
        ----------------------------    --------
                Basic NetWare Server      No
        European Language Supplement      No
                        User Upgrade      Yes
                 Fingertip Librarian      Yes
             Common Reference Manual      Yes
System Files Device Reference Manual      Yes
                      ATM Basic Fonts     Yes
   Distributed File System Utilities      Yes

                          Apply        Reset


Press ‘TAB’ to move between fields.  Press ‘ENTER’ to apply
fields.
```

Figure 8-19. Verification Screen

9. Select the packages as shown in Figure 8-19.

   Use the left ◄ and right ► arrows on your keyboard to move through the field selections. Use the down ▼ arrow to move to the next field.

10. Press the down ▼ arrow to move to the `Apply` field and press ENTER.

    The system displays another verification screen (Figure 8-20).

```
The following packages are included in this set for this release.
Select “Yes”in the install column for the packages you wish to
install.

                        Package Name    Install?
        ----------------------------    --------
     Remote Procedure Call Utilities      Yes
                  Internet Utilities      Yes
       Commands Networking Extension      Yes
                  Internet Reference      Yes
                 UnixWare Supplement      Yes
                Windowing Korn Shell      Yes
            Software Packaging Tools      Yes
      C Optimized Compilation System      Yes

                          Apply         Reset


Press ‘TAB’ to move between fields.  Press ‘ENTER’ to apply
fields.
```

Figure 8-20. Verification Screen

11. Select the packages as shown in Figure 8-20.

    Use the left ◄ and right ► arrows on your keyboard to move through the field selections. Use the down ▼ arrow to move to the next field.

12. Press the down ▼ arrow to move to the Apply field and press ENTER.

    The system displays another verification screen (Figure 8-21).

```
The following packages are included in this set for this release.
Select “Yes”in the install column for the packages you wish to
install.

                        Package Name    Install?
        ----------------------------    --------
                   Enhanced Debugger      Yes
                XWIN GWS Development      Yes
         Desktop Manager Development      Yes
                  MooLIT Development      No
 Motif Intrinsics Libraries Includes      Yes
                     Kernel Debugger      No
              ISV Sample Source Code      Yes
                   IHV Sample Source      Yes

                          Apply          Reset


Press ‘TAB’ to move between fields.  Press ‘ENTER’ to apply
fields.
```

Figure 8-21. Verification Screen

13. Select the packages as shown in Figure 8-21.

    Use the left ◄ and right ► arrows on your keyboard to move through the field selections. Use the down ▼ arrow to move to the next field.

14. Press the down ▼ arrow to move to the `Apply` field and press ENTER.

    The system displays another verification screen (Figure 8-22).

```
The following packages are included in this set for this release.
Select "Yes"in the install column for the packages you wish to
install.

                        Package Name    Install?
        ----------------------------    --------
    Operating System API Ref. Manual      Yes
   Windowing Service API Ref. Manual      Yes
     NetWare C Interface Ref. Manual      Yes
                 Motif API Reference      Yes
            Device Driver Reference       Yes
                     XWIN GWS Fonts       Yes
     UNIX Software Development Tools      Yes
           Programming in Standard C      Yes

                          Apply        Reset


Press 'TAB' to move between fields.  Press 'ENTER' to apply
fields.
```

Figure 8-22. Verification Screen

15. Select the packages as shown in Figure 8-22.

    Use the left ◄ and right ► arrows on your keyboard to move through the field selections. Use the down ▼ arrow to move to the next field.

16. Press the down ▼ arrow to move to the Apply field and press ENTER.

    The system displays another verification screen (Figure 8-23).

```
The following packages are included in this set for this release.
Select "Yes"in the install column for the packages you wish to
install.

                        Package Name    Install?
        ----------------------------    --------
  Programming with UNIX System Calls      Yes
       Network Programming Interface      Yes
                  NetWare Transports      Yes
     NetWare C Interface Programming      Yes
 Graphics User Interface Programming      Yes
         STREAMS Modules and Drivers      Yes
           Portable Device Interface      Yes
           Device Driver Programming      Yes

                          Apply          Reset


Press 'TAB' to move between fields.  Press 'ENTER' to apply
fields.
```

Figure 8-23. Verification Screen

17. Select the packages as shown in Figure 8-23.

    Use the left ◄ and right ► arrows on your keyboard to move through the field selections. Use the down ▼ arrow to move to the next field.

18. Press the down ▼ arrow to move to the `Apply` field and press ENTER.

    The system displays another verification screen (Figure 8-24).

```
The following packages are included in this set for this release.
Select "Yes"in the install column for the packages you wish to
install.

                        Package Name    Install?
        ----------------------------    --------
 XWIN Screen Interface Specification      Yes
             Motif Programming Guide     Yes
                   Motif Style Guide     Yes
     Intro. to System Administration     Yes
               TCP/IP Administration     Yes
          NFS/RPC/NIS Administration     Yes
     Software Development Kit Update     Yes
               UnixWare Update 1.1.1     Yes

                          Apply         Reset


Press 'TAB' to move between fields.  Press 'ENTER' to apply
fields.
```

Figure 8-24. Verification Screen

19. Select the packages as shown in Figure 8-24.

    Use the left ◄ and right ► arrows on your keyboard to move through the field selections. Use the down ▼ arrow to move to the next field.

20. Press the down ▼ arrow to move to the `Apply` field and press ENTER.

    The system displays another verification screen (Figure 8-25).

```
The following packages are included in this set for this release.
Select “Yes”in the install column for the packages you wish to
install.

                        Package Name    Install?
        ----------------------------    --------
               UnixWare Update 1.1.2      Yes
   VGA 256 Video Driver for UnixWare      Yes
         Ethernet Hardware Support        No
               Token Ring Hardware        No
                CD-ROM File System        No

                         Apply          Reset


Press ‘TAB’ to move between fields.  Press ‘ENTER’ to apply
fields.
```

Figure 8-25. Verification Screen

21. Select the packages as shown in Figure 8-25.

    Use the left ◄ and right ► arrows on your keyboard to move through the field selections. Use the down ▼ arrow to move to the next field.

22. Press the down ▼ arrow to move to the Apply field and press ENTER.

    The system displays the Automatic Installation screen (Figure 8-26).

```
The following packages can be installed automatically using
default values.  If you select custom installation you will be
given the opportunity to change these values.  However, this
requires additional UNIX System knowledge.

                        Package Name     Options
        ----------------------------    ---------
           Network Support Utilities    AUTOMATIC
  Enhanced Application Compatibility    AUTOMATIC
                 Graphics Utilities     AUTOMATIC
                 Internet Utilities     AUTOMATIC
      C Optimized Compilation System    AUTOMATIC
                  Enhanced Debugger     AUTOMATIC

                         Apply          Reset


Press 'TAB' to move between fields.  Press 'ENTER' to apply
fields.
```

Figure 8-26. Automatic Installation Screen

23. Select the packages as shown in Figure 8-26.

    Use the left ◄ and right ► arrows on your keyboard to move through the field selections. Use the down ▼ arrow to move to the next field.

24. Press the down ▼ arrow to move to the `Apply` field and press ENTER.

    The system displays the Assign Computer Name screen (Figure 8-27).

```
Select a name for the computer.  This should be a short name that
will be used to identify your computer.  Please use only letters
or numbers in the name you type.  The name must be at least 3
characters long.

If you will be connecting your computer to a network of other UNIX
Systems, then it is important that the name specified here be
unique to your system.  See the Help facility or the Installation
Handbook for more information

Computer Name:



                          Apply          Reset


Press 'TAB' to move between fields.  Press 'ENTER' to apply
fields.
```

Figure 8-27. Assign Computer Name Screen

25. Enter the name of your computer.

    The system displays the Build Font Binaries screen (Figure 8-28).

```
On this screen, you have the options to build your fonts for the X
Window system.  This takes the machine-independent format in which
the fonts are distributed and compiles them into a machine
readable format.

To use the X-Window system, the font binaries must be built.  This
takes a few minutes.  You can build them now or do it at a later
time by running the shell script, /usr/X/adm/bldfonts.

Do you want to build the font binaries now?



Your choices are

1. Build the font binaries now
2. Do not build the font binaries now

Type '1' or '2' and press Enter/Return to continue.
```

Figure 8-28. Build Font Binaries Screen

26. Enter **1**

    If you entered P5120 as the CPU type in the Installation Type Selection screen (Figure 8-10), after approximately one to two hours the system displays the Re-Enter HBA Disk screen (Figure 8-29).

    If you entered 486 as the CPU type in the Installation Type Selection screen (Figure 8-10), the system displays the Verification Screen (Figure 8-31). Continue with Step 32.

```
You must now insert the relevant HBA diskette(s) that you used
before.

Please insert the diskette labeled:
            Adaptec 7800 Family PCI SCSI IHV HBA
into the drive and press ‘Enter’.









Press ‘Enter’ to continue.
```

Figure 8-29. Re-Enter HBA Disk Screen

27. Remove the cartridge tape labeled “INTUITY CONVERSANT VIS V6.0 UnixWare for INTUITY 1.1.2” from the tape drive. See “Inserting and Removing Cartridge Tapes” in Chapter 3, “Common System Procedures,” for the procedure.
28. Insert the diskette labeled “HBA Floppy” into the diskette drive. See “Inserting and Removing Cartridge Tapes” in Chapter 3, “Common System Procedures,” for the procedure.
29. Press (ENTER).

    After approximately five minutes the system displays the Remove HBA Disk screen (Figure 8-30).

```
Please remove the HBA diskette from the drive and press 'Enter' to
continue.



Press 'Enter' to continue.
```

Figure 8-30. Remove HBA Disk Screen

30. Remove the diskette labeled "HBA Floppy" from the diskette drive. See "Inserting and Removing Diskettes" in Chapter 3, "Common System Procedures," for the procedure.

31. Press [ENTER].

    The system displays the following message:

    ```
    The UNIX System is now being rebuilt to reflect your
    software selections.

    This will take several minutes and will not require any
    user input.

    Please wait.
    ```

    After approximately five minutes the system displays the Installation Verification screen (Figure 8-31).

    NOTE:
    There are several Verification screens. These screens show the status of all of the software packages you selected in Steps 7 through 22.

```
You selected to install these packages in this set. The status of
each package installation is to the left of its name.

    Status              Package Name
   ---------            ----------------------------
   Succeeded            Base System
   Succeeded            Printer Support
   Succeeded            Network Support Utilities
   Succeeded            Enhanced Application Compatibility
   Succeeded            Graphics Utilities
   Succeeded            Adobe Type Manager (TM)
   Succeeded            Desktop Manager
   Succeeded            Advanced Commands





Press 'Enter' to continue.
```

Figure 8-31. Installation Verification Screen

32. Make sure that all of the files you selected in Steps 39 through 65 are shown on the Verification Screens as having been successfully loaded.
33. Press [ENTER] to view the remaining verification screens.

    After you have viewed the last Verification screen, the system displays the Application Server Installation Complete screen (Figure 8-32).

```
Installation of the UnixWare Application Server is complete.
Applications and other software sets can be installed using the
tools available after the computer is rebooted.  When you press
'Enter' the computer will be shutdown.  Make sure the boot floppy
drive is empty.

After the computer is rebooted, you can set up and try out your
mouse.  You will then be asked to create a user account for your
UNIX System.

Refer to the Installation Handbook for more information.









Press 'Enter' to continue.
```

Figure 8-32. Application Server Installation Complete Screen

34. Continue with the next procedure, "Initializing the Mouse."

Initializing the Mouse

To initialize the mouse, do the following:

1. Starting at the Application Server Installation Complete screen (Figure 8-32), press ENTER to begin the automatic reboot of the system.

   The system displays the Select Mouse screen (Figure 8-33).

```
If you wish to use a mouse with UnixWare you must select the type
of mouse attached to your computer from the list below (or select
“No Mouse” if you do not wish to use a mouse).

If you are unsure of what type you have, refer to Help information
for this screen or the Installation Handbook for more information.



Your choices are:

1. Serial Mouse
2. Bus Mouse
3. PS/2 - Compatible Mouse
4. No Mouse



Press ‘1’, ‘2’, ‘3’ or ‘4’ followed by ‘Enter’.
```

Figure 8-33. Select Mouse Screen

2. If you are not installing a mouse, enter **4**

   Continue with the next procedure, “Setting Up User Accounts.”

   If you are installing a mouse, enter **1**

   The system displays the Serial Mouse Installation screen (Figure 8-34).

```
In order to use a serial mouse, you must tell the installation
program which serial port your mouse is connected to.  You must
also indicate the number of buttons that are on the mouse you will
be using.  See the Help Facility or the Installation Handbook for
more information.

Enter the following information about your serial mouse.

Serial port your mouse is connected to:
               Number of mouse buttons:



                         Apply          Reset


Press 'TAB' to move between fields.  Press 'ENTER' to apply
fields.
```

Figure 8-34. Serial Mouse Installation Screen

3. Enter the appropriate data for the serial port your mouse is connected to as listed in Table 8-3.

   Use the left ◄ and right ► arrows on your keyboard to move through the field selections. Use the down ▼ arrow to move to the next field.

Table 8-3. Serial Mouse Installation Screen Entries

Serial Port Connection	Screen Entry
COM1 port	TTY00
COM2 port	TTY01

4. Enter the number of mouse buttons on your mouse.
5. Press the down ▼ arrow to move to the `Apply` field and press ENTER.

   The system displays the Mouse Test screen (Figure 8-35).

```
Your mouse selection is ready to be tested.

After pressing ‘Enter’, you will have 15 seconds to test the
mouse. Make sure it moves as you expect, then press a mouse button
to end the test.  If you don’t press a button within 15 seconds,
the test will appear to fail.









Press ‘Enter’ to continue.
```

Figure 8-35. Mouse Test Screen

6. Press ENTER.
7. Move the mouse to test it.
8. Press a mouse button.

   The system displays the Root Account Setup screen (Figure 8-36).

```
In addition to user accounts, UnixWare contains a special account
known as the “Root” account.  This account is the most powerful
account on a UNIX System.  You should now choose a password for
this account.

You will be asked to enter the root password twice after this
screen.  The text of the password will not appear on the screen
when you type it.









Press ‘Enter’ to continue.
```

Figure 8-36. Root Account Setup Screen

9. Continue with the next procedure, “Setting Up User Accounts.”

Setting Up User Accounts

To set up user accounts, do the following:

1. Starting at the Root Account Setup screen (Figure 8-36), press ENTER.

   The system displays the following message:

   `New password:`

2. Enter the root password.

   The system displays the following message:

   ```
   New password:
   Re-enter new password:
   ```

3. Re-enter the root password.

   The system displays the Sysadm Account Setup screen (Figure 8-37).

```
You now need to choose a password to restrict access to the
account 'sysadm', for system administration.

Press 'Enter' to continue.
```

Figure 8-37. Sysadm Account Setup Screen

4. Press ENTER.

   The system displays the following message:

   `New password:`

5. Enter the sysadm password.

   The system displays the following message:

   ```
   New password:
   Re-enter new password:
   ```

6. Re-enter the sysadm password.

   The system displays the UnixWare Installation Complete screen (Figure 8-38).

```
                    UnixWare is now ready for use.

Applications and other software sets can be installed using the
tools available with UnixWare.

After you proceed from this screen you will be able to access your
computer.  Type a login ID at the “login:” prompt, followed by the
password associated with that login ID at the “password” prompt.
For your protection the password will not be visible on the screen
as you type it.

Refer to the Installation Handbook for more information.









Press ‘Enter’ to continue.
```

Figure 8-38. UnixWare Installation Complete Screen

7. Press [ENTER].

   The system displays the login screen.

8. Continue with the next procedure, “Setting up the Monitor.”

Setting up the Monitor

To set up the monitor, do the following:

1. Starting at the UnixWare Installation Complete screen (Figure 8-38), press [ALT] [E].

   The system displays the following message:

   ```
   Welcome to USL UNIX System V Release 4.2 Version 1
   Console Login:
   ```

2. Enter **root**

3. Enter your root password.

   The system displays the system prompt #.

   In order to use the graphical user interfaces (GUI) with the video controller card installed in your system, perform the following video setup operations:

4. Enter **/usr/X/lib/display/setvgamode**

   The system displays a menu listing 38 different video chipset options.

5. Enter the number corresponding to the video controller circuit card installed on your system.

   The system displays a menu listing monitor model numbers.

6. Enter the model number corresponding to the video controller circuit card installed on your system.

   The system displays the following message:

   ```
   Video RAM : 1024K
   Do you want to change this value ?(y/n) [n]:
   ```

7. Press (ENTER).

   The system displays the following message:

   ```
   Default Monitor Size, 17 inches(y/n) [y]:
   ```

8. Enter **n**

   The system displays the Monitor Size screen (Figure 8-39).

```
Monitor Size
============
12 inches
13 inches
14 inches
15 inches
16 inches
17 inches
19 inches
20 inches
21 inches
other









Enter Monitor Size =>
```

Figure 8-39. Monitor Size Screen

9. Enter **14**

   The system displays a screen similar to the Monitor Test screen (Figure 8-40).

```
You have selected the following:

VENDOR.......: Cirrus Logic - Generic
CHIPSET......: GD54xx
VIDEO RAM....: 1024K
MONITOR......: STDVGA
RESOLUTION...: 640x480
COLORS.......: 256









Do you want to test this mode ?(y/n) [y]:
```

Figure 8-40. Monitor Test Screen

10. Press ENTER.

    The system displays the Test Pattern screen (Figure 8-41).

```
A TEST PATTERN WILL BE DRAWN ON YOUR SCREEN.
AFTER A FEW SECONDS, YOU WILL RETURN TO THIS
SCREEN. IF THE PATTERN DOESN'T LOOK RIGHT, YOU
CANNOT USE THIS MODE. YOU SHOULD TRY ANOTHER MODE.
IF THE PATTERN IS NOT EVEN STABLE,
PRESS 'DEL' IMMEDIATELY TO AVOID DAMAGE TO YOUR
HARDWARE.



Do you want to continue ? (y/n) [y]:
```

Figure 8-41. Test Pattern Screen

11. Press (ENTER).

    After the test pattern is drawn, the system displays the following message:

    `Do you want to try the test again ?(y/n) [n]:`

12. Press (ENTER) to stop the test.

    The system displays the following message:

    `Accept(y), Quit(q), Try another mode(anykey):`

13. Enter **y** to accept the setup.

    The system displays the Current Selection screen (Figure 8-42).

```
Current Selection:

        ENTRY........: GD54XX
        RESOLUTION...: 640x480
        VISUAL.......: PseudoColor
        MONITOR......: STDVGA
```

Figure 8-42. Current Selection Screen

You have now installed all the required software for your UnixWare operating system.

Installing the VERITAS Software Packages

The VERITAS software is comprised of two separate packages: VERITAS Volume Manager and VERITAS Advanced File System. You must install the Volume Manager software before installing the Advanced File System software.

Make sure you have the following software:

- 4 floppies labeled “VERITAS Volume Manager 1.2.1.1”
- 1 floppy labeled “VERITAS Advanced File System 1.1”

NOTE:
If you want further information on the VERITAS features, see

- *VERITAS Volume Manager Documentation*, 585-350-907
  - Installation Guide Release 1.2
  - Basic User’s Guide Release 1.2
  - System Administrator’s Guide Release 1.2
- *VERITAS File System, System Administrator’s Guide*, 585-350-906

Installing the VERITAS Volume Manager Package

Perform the three procedures in this section sequentially.

1. At the system prompt, enter **pkgadd -d diskette1**

   The system displays the following message:

   ```
   Insert diskette into Floppy Drive 1.
   Type [go] when ready.
       or [q] to quit:  (default:  go)
   ```

2. Insert the diskette labeled “VERITAS Volume Manager 1.2.1.1: 1 of 4” into the diskette drive. See “Inserting and Removing Diskettes” in Chapter 3, “Common System Procedures,” for the procedure.

3. Press ENTER.

   The system displays the following message:

   ```
   Installation in progress.  Do not remove the diskette.

   The following packages are available:

   1  vxvm  VERITAS Volume Manager
           (i386at) 1.2.11

   Select the package(s) you wish to process...
   ```

4. Enter **1**

   After several minutes, the system displays the following message:

   ```
   You have the Operations, Administration, and
   Maintenance package installed.

   Would you like to add the VXVM interface Forms and
   Menus? [y]
   ```

5. Press (ENTER).

   After several minutes, the system displays the following message:

   ```
   Insert diskette 2 of 4 into floppy drive 1
   Type [go] when ready.
       or [q] to quit:  (default:  go)
   ```

6. Remove the diskette labeled "VERITAS Volume Manager 1.2.1.1: 1 of 4" from the diskette drive. See "Inserting and Removing Diskettes" in Chapter 3, "Common System Procedures," for the procedure.

7. Insert the diskette labeled "VERITAS Volume Manager 1.2.1.1: 2 of 4" into the diskette drive. See "Inserting and Removing Diskettes" in Chapter 3, "Common System Procedures," for the procedure.

8. Press (ENTER).

   After several minutes, the system displays the following message:

   ```
   Insert diskette 3 of 4 into floppy drive 1
   Type [go] when ready.
       or [q] to quit:  (default:  go)
   ```

9. Remove the diskette labeled "VERITAS Volume Manager 1.2.1.1: 2 of 4" from the diskette drive. See "Inserting and Removing Diskettes" in Chapter 3, "Common System Procedures," for the procedure.

10. Insert the diskette labeled "VERITAS Volume Manager 1.2.1.1: 3 of 4" into the diskette drive. See "Inserting and Removing Diskettes" in Chapter 3, "Common System Procedures," for the procedure.

11. Press (ENTER).

    After several minutes, the system displays the following message:

    ```
    Insert diskette 4 of 4 into floppy drive 1
    Type [go] when ready.
        or [q] to quit:  (default:  go)
    ```

12. Remove the diskette labeled "VERITAS Volume Manager 1.2.1.1: 3 of 4" from the diskette drive. See "Inserting and Removing Diskettes" in Chapter 3, "Common System Procedures," for the procedure.

13. Insert the diskette labeled "VERITAS Volume Manager 1.2.1.1: 4 of 4" into the diskette drive. See "Inserting and Removing Diskettes" in Chapter 3, "Common System Procedures," for the procedure.

14. Press (ENTER).

    When the packages on the last diskette are finished installing, the system prompts:

    ```
    Installation of VERITAS Volume Manager (vxvm) was
    successful.
    ```

    ```
    Insert diskette into Floppy Drive 1.
    Type [go] when ready.
        or [q] to quit:  (default:  go)
    ```

15. Enter **q**

    The system displays the system prompt #.

16. Remove the diskette from the diskette drive. See "Inserting and Removing Diskettes" in Chapter 3, "Common System Procedures," for the procedure.

17. Continue with the next procedure, "Installing the VERITAS File System Administration Package".

Installing the VERITAS File System Administration Package

If you have not done so already, complete "Installing the VERITAS Volume Manager Package" above before continuing with this procedure.

1. At the system prompt, enter **pkgadd -d diskette1**

   The system displays the following message:

   ```
   Insert diskette into Floppy Drive 1.
   Type [go] when ready.
       or [q] to quit:  (default:  go)
   ```

2. Insert the diskette labeled "VERITAS Advanced File System 1.1" into the diskette drive and press (ENTER). See "Inserting and Removing Diskettes" in Chapter 3, "Common System Procedures," for the procedure.

   The system displays the following message:

   ```
   Installation in progress.  Do not remove the diskette.
   ```

   ```
   The following packages are available:
   ```

   ```
   1  vxfs  VERITAS File System
           (AT386) 1.3 Advanced
   ```

   ```
   Select the package(s) you wish to process...
   ```

3. Enter **1**

   Once the package is finished installing, the system displays the following message:

   ```
   Insert diskette into Floppy Drive 1.
   Type [go] when ready.
       or [q] to quit:  (default:  go)
   ```

4. Enter **q**

   The system responds with a message to say that if all desired packages are installed, the machine should be rebooted. Do not reboot the system at this time.

   The system displays the system prompt #.

5. Remove the diskette from the diskette drive. See "Inserting and Removing Diskettes" in Chapter 3, "Common System Procedures," for the procedure.

6. Continue with the next procedure, "Activating the Volume Manager".

Activating the Volume Manager

If you have not done so already, perform the following procedures before continuing with this procedure:

1. Installing the VERITAS Volume Manager Package
2. Installing the VERITAS File System Administration Package

To activate the Volume Manager, complete the following steps.

1. At the system prompt, enter **volinstall**

   The system displays the Volume Manager Information screen (Figure 8-43).

```
The Volume Manager names disks on your system using the controller
and disk number of the disk, substituting them into the following
pattern.

             c<controller>t<disk>d0

        Some examples would be:

             c0t0d0 - first controller, first disk
             c1t0d0 - second controller, first disk
             c1t1d0 - second controller, second disk

The Volume Manager has detected the following disks on your
system.

             c0t0d0
             c0t1d0



Hit 'Return' to continue
```

Figure 8-43. Volume Manager Information Screen

The system responds with a screen asking you to choose the type of installation.

2. Enter **1** for Quick Installation.

   The system displays the following message:

   ```
   Enter disk name for c0t0d0 [<name>, q, ?]
   (default: disk01)
   ```

3. Enter **disk00**

   The system displays the following message:

   ```
   The c0t0d0 disk has been configured for encapsulation.
   ```

   If you have a two disk system, the system displays the following message:

   ```
   Enter disk name for c0t1d0 [<name>, q, ?]
   ```

4. Enter **disk01**

   The system displays the following message:

   ```
   The c0t0d0 disk has been configured for encapsulation.

   The system should now be shut down and rebooted to
   continue with the installation process.

   Shut down and reboot now?[y, n, q, ?] (default: y)
   ```

5. Press (ENTER).

NOTE:
If you have additional disks installed that have not yet been administered through software, the following message displays for each disk:

```
prtvtoc [-a] [-e] [-p] [-f file] raw_device
```

```
The c0t1dXdisk does not appear to be prepared for
this system.  Add as a new disk through the
voldiskadm command.
Hit return to continue.
```

This message is normal; press (ENTER). If you are using the additional disk(s) for mirroring, the disks are administered when you set up SCSI mirroring. If you are not using the additional disks for mirroring, as in the case where the second disk is used from speech, use the **voldiskadd** command.

6. The system reboots three times; each reboot takes approximately 5 minutes to complete. Press (ENTER) when you are prompted between each reboot.

   When the initialization of the Volume Manager is complete, the system displays the login screen.

7. Press (ALT) (E).

   System response:

```
Welcome to USL UNIX System V Release 4.2 Version 1
Console Login:
```

8. Enter **root**
9. Enter your root password.

   The system responds by displaying the system prompt #.

NOTE:
Should the **volinstall** command fail because it cannot find the boot disk (c0t0d0), do the following:

1. Enter **/etc/conf/bin/idbuild -B** to rebuild the kernel.
2. Once the kernel rebuild is complete, enter **linit 6** to reboot the system.

   When the system comes up, you may see Volume Manager errors (vxvm).

3. Perform the "Activating the Volume Manager" procedure above again.

Installing the LAN Card Driver Package

See "Ethernet LAN Circuit Cards" or "Token Ring Circuit Cards" in Chapter 5, "Replacing, Installing, or Upgrading Circuit Cards"," for the procedure.

Installing the INTUNIX Patch and Enhancement Package

The INTUNIX set contains the update packages for Unixware 1.1.2.

To install the INTUNIX Patch and Enhancement Package, do the following:

1. Enter **pkgadd -d ctape1**

   The system displays the following message:

   ```
   Insert a cartridge into Tape Drive 1.
   Type [go] when ready
       or [q] to quit: (default: go)
   ```

2. Insert the INTUNIX tape into the cartridge tape drive. See "Inserting and Removing Diskettes" in Chapter 3, "Common System Procedures," for the procedure.

3. Press (ENTER).

   The system displays the following message:

   ```
   Installation in progress. Do not remove the cartridge.

   The following sets are available:
   1    INTUNIX  INTUITY UnixWare 1.1.2 Enhancement Set
                 (i486)

   Select package(s) you wish to process (or 'all' to
   process all packages). (default: all) [?,??,q]
   ```

4. Press (ENTER).

   The system displays the following message:

```
Processing:
Set: INTUITY UnixWare 1.1.2 Enhancement Set (INTUNIX)
from <ctape1>.

INTUITY UnixWare 1.1.2 Enhancement Set
(i486)
Using </> as the package base directory

Installation of INTUNIX successful.

The following packages are available:
    1    INTUNIX1
    2    installit
    3    memdrvr
    4    procdrvr

Select package(s) you wish to process (or 'all' to
process all packages). (default: all) [?,??,q]
```

5. Press (ENTER).

   The system displays several status messages and then the following message:

```
Installation of INTUITY UnixWare 1.1.2 Enhancement Set
(INTUNIX) was successful.

Insert a cartridge into Tape Drive 1.
Type [go] when ready
    or [q] to quit: (default: go)
```

6. Remove the INTUNIX tape from the cartridge tape drive. See "Inserting and Removing Diskettes" in Chapter 3, "Common System Procedures," for the procedure.

7. Enter **q**

8. Reboot the system. See "Rebooting the UNIX System" in Chapter 3, "Common System Procedures," for the procedure.

Installing the INTUITY CONVERSANT System Software

9

Overview

This chapter details installation procedures for the INTUITY™ CONVERSANT® system software.

Purpose

This purpose of this chapter is to provide the information necessary to reload the INTUITY CONVERSANT system to a computer which has experienced a disk failure. This chapter should be used in conjunction with Appendix D, "Disaster Recovery Checklists"."

Installing the INTUITY CONVERSANT Base Software Set

The INTUITY CONVERSANT base software set includes

- INTUITY CONVERSANT Utilities Package
- INTUITY CONVERSANT Runtime Processing Package
- INTUITY CONVERSANT Maintenance Package
- INTUITY CONVERSANT Logger/Alerter Package
- INTUITY AUDIX Logger Package
- INTUITY CONVERSANT Base ORACLE RDBMS 7.0.12
- INTUITY CONVERSANT Extended ORACLE RDBMS 7.0.12
- INTUITY CONVERSANT ORACLE 7 Integration Package
- INTUITY CONVERSANT Administration Screens Package
- INTUITY CONVERSANT Transaction State Machine Package
- INTUITY CONVERSANT Switch Utilities Package
- INTUITY CONVERSANT License Modification Package
- INTUITY CONVERSANT Platform CONVERSANT Tuning

All of the packages included in the INTUITY CONVERSANT base software set are required for the operation of the INTUITY CONVERSANT system. All of the packages are contained on one cartridge tape.

To install the INTUITY CONVERSANT base software set, do the following:

CAUTION:
If you are using this procedure in conjunction with an upgrade, skip the first three steps and begin with Step 4.

1. Log in as **root**.
2. Insert the cartridge tape labeled “INTUITY Platform CVIS 6.0 Set 1 of 1” into the cartridge tape drive.
3. Enter **pkgadd -d ctape1**

   The system displays the following message:

```
Insert a cartridge into Tape Drive 1.
Type [go] when ready,
        or [q] to quit:  (default:  go)
```

4. Press (ENTER).

   The system displays the following message:

```
Installation in progress.  Do not remove the cartridge.

The following packages are available:

 1. CVISet       INTUITY CONVERSANT VIS V6.0 Set
                 (i486)

Select the package(s) you wish to process (or 'all' to
process all packages). (default: all) [?,??,q]:
```

5. Press (ENTER).

   The system displays the following message:

```
PROCESSING:
Set: INTUITY CONVERSANT VIS V6.0 Set (CVISet) from
<ctape1>

INTUITY CONVERSANT VIS V6.0 Set
(i486)
Using </> as the package base directory.

Do you want to run the default set installation?
(default: y)
```

6. Answer the questions in Table 9-1.

   Place a check mark in the appropriate column for each question.

Table 9-1. Questions to Determine if the Default Installation is Appropriate

Number	Question	Yes	No
1	Do you want to turn off daylight savings time?		
2	Does your system have a remote maintenance circuit card? **NOTE:** If you answer yes to this question, answer yes to Question 3 as well.		
3	Do you want to disable COM1?		
4	Do you want to disable COM2?		
5	Do you want to disable the parallel port?		
6	Is Interrupt Level 4 being used by anything other than COM1?		
7	Is Interrupt Level 3 being used by anything other than COM2?		
8	Is Interrupt Level 7 being used by anything other than the parallel port?		
9	Is your ORACLE database larger than 65 Mbytes		
10	Does your system have the Extended ORACLE feature package?		

7. If you answered **no** to all of the questions in Table 9-1, you can use the default installation, enter **y**

   If you answered **yes** to any of the questions in Table 9-1 you can not use the default installation, complete the following Steps a through Step q:

   a. Enter **n**

      The system displays the following message:

      ```
      Do you want the default installation for mtce?
      [y,n,?]
      ```

   b. If you answered **no** to Question 1 in Table 9-1, enter **y** and continue with Step Step d.

      If you answered **yes** to Question 1 in Table 9-1, enter **n**

      The system displays the following message:

      ```
      Is Daylight Savings Time ever used? [y,n,?]
      ```

   c. Enter **n**

      The system displays the following message:

      ```
      Do you want the default installation for vs?
      [y,n,?]
      ```

d. If you answered **no** to all seven Questions 2, 3, 4, 5, 6, 7, and 8 in Table 9-1, enter **y** and continue with Step Step g.

If you answered **yes** to Question 2, 3, 4, 5, 6, 7, or 8 in Table 9-1, enter **n**

The system displays the following message:

```
The first serial port uses interrupt level 4
The second serial port uses interrupt level 3
The parallel port uses interrupt level 7

If you wish to reclaim some of these interrupts
for other devices, you may disable one of these
serial ports.  However, one serial port must be
enabled.

For serial ports would you like to:
1.  Enable both
2.  Enable first, disable second
3.  Disable first, enable second

Please enter your selection:
```

e. If you answered **no** for Questions 2, 3, 4, 6, and 7 in Table 9-1, enter **1**

If you answered **no** for Questions 2, 3, and 6 and **yes** for Question 4 or 7 in Table 9-1, enter **2**

If you answered **yes** for Question 2, 3, or 6 and **no** for Questions 4 and 7 in Table 9-1, enter **3**

NOTE:
If you would like to disable both serial ports, enter **3**, complete the installation procedure, edit the **/etc/conf/sdevice.d/asyc** file, and reboot the system.

The system displays the following message:

```
For the parallel port (interrupt 7) would you like
to:
1.  Enable the parallel port
2.  Disable the parallel port
```

f. If you answered **no** for Questions 5 and 8 in Table 9-1, enter **1**

If you answered **yes** for Question 5 or 8 in Table 9-1, enter **2**

The system displays the following message:

```
Do you want the default installation for maint?
```

g. Enter **n**

NOTE:
There is no difference between the default installation and a custom installation of the maint system.

The system displays the following message:

```
Do you want the default installation for machlog?
[y,n,?]
```

h. If you answered **no** to Questions 2, 3, and 4 in Table 9-1, enter **y** and continue with Step Step j.

If you answered **yes** to Question 2, 3, or 4 in Table 9-1, enter **n**

The system displays the following message:

```
The first serial port uses interrupt level 4
The second serial port uses interrupt level 3

If you wish to reclaim some of these interrupts
for other devices, you may have to free some of
these ports.  However, one serial port must be
configured as the alarm port.

For serial ports would you like to:
1.  Enable first serial port (COM1) as alarm port
2.  Enable second serial port (COM2) as alarm port

Please enter your selection:
```

i. If you answered **no** for Questions 2 and 3 and **yes** for Question 4 in Table 9-1, enter **1**

NOTE:
If your system has a remote maintenance circuit card, make sure COM1 is disabled in the CMOS settings. See “P5 120 MHz CPU Circuit Card,” or “486 CPU Circuit Cards,” in Chapter 5, “Replacing, Installing, or Upgrading Circuit Cards,” for the procedure to edit the CMOS settings.

If you answered yes to Questions 2 and 3 and no for Question 4 in Table 9-1, enter ***1***

If you answered **yes** to Question 3 and **no** for Questions 2 and 4 in Table 9-1, enter **2**

CAUTION:
If you choose the default installation for oracle the extended oracle package is not installed. You may install it upon completion of the CVIS set.

The system displays the following message:

```
Serial port X has been configured as the alarm
port.
```

```
Do you want the default installation for ora7base?
[y,n,?]
```

j. If you answered **no** for Questions 9 and 10 in Table 9-1, enter **y** and continue with Step Step 8, below.

If you answered **yes** for Question 9 or 10 in Table 9-1, enter **n**

The system displays the following message:

```
The default name for the database file is dbsA.dbf
```

```
Enter a new name or strike ENTER to accept the
default.
```

k. Press (ENTER).

The system displays the following message:

```
The default name for the first redo log file is
log1A.dbf
```

```
Enter a new name or strike ENTER to accept the
default.
```

l. Press (ENTER).

The system displays the following message:

```
The default name for the second redo log file is
log2A.dbf
```

```
Enter a new name or strike ENTER to accept the
default.
```

m. Press (ENTER).

The system displays the following message:

```
How many blocks do you want in your database?
[default: 132,000].
```

n. Enter the number of blocks you want in your database.

CAUTION:
This number must be greater than 24,000.

The system displays the following message:

```
The default size for each of the redo log files is
800 [512 bytes] blocks.
```

```
How many blocks do you want in each of the redo log
files? [default: 800].
```

o. Enter the number of blocks you want in your redo log files.

The system displays the following message:

```
Do you want to install the ora7ext? [y,n,?]
```

p. If you want to install the extended oracle package enter **y**

If you do not want to install the extended oracle package enter **n**

The system displays the following message:

```
Do you want to install TSM? [y,n,?]
```

q. Enter **y**

The system displays the following message:

```
Lucent Technologies Inc.
## Processing package information.
## Processing system information.
## Verifying disk space requirements.

Installing INTUITY CONVERSANT VIS V6.0 Set as <CVISet>

## Executing preinstall script.
Executing the preinstall personality script for
CVIStune.
Enter password for oracle:
New password:
```

CAUTION:
If you are using this procedure in conjunction with an upgrade, Stop here and return to INTUITY CONVERSANT System Version 6.0 Upgrade, 585-310-183. Do not continue with Step 8.

8. Type the new password.
9. Press (ENTER).

   The system displays the following message:

   ```
   Re-enter new password:
   ```

10. Re-type the new password.
11. Press (ENTER).

    The system displays a series of messages. After approximately one hour the system displays the following message:

    ```
    Processing of <INTUITY CONVERSANT VIS V6.0 Set> is
    completed.

    Insert a cartridge into Tape Drive 1.

    Type [go] when ready,
        or [q] to quit: (default: go)
    ```

12. Enter **q**

    The system displays the following message:

    ```
    ***IMPORTANT NOTICE***
        If installation of all desired packages is
        complete, the machine should be rebooted in order
        to ensure sane operation.  Execute the shutdown
        command with the appropriate options and wait for
        the “Console Login:” prompt.
    ```

13. Enter **shutdown -g0 -y**

    The system displays the following message:

    ```
    The system is down.
    Press CTRL-ALT-DEL to reboot your computer.
    ```

14. Press [CONTROL] [ALT] [DEL].

Installing the Optional Feature Software

10

Overview

This chapter describes the procedures to install all the software that was not included on the application software cartridge tape. This software is called *optional* software since it is not required for the basic system to function.

The organization of this chapter is not to imply that you will necessarily install all of these packages nor will you install them in the order documented. Packages that are order-specific are identified as such.

This chapter also describes the general procedure for removing software packages.

NOTE:
Be sure that you have run the INTUITY™ CONVERSANT® Hardware Resource Allocator and indicate all hardware that is/will be on your system. The data generated by the program is crucial in assuring that you respond correctly the prompts in this chapter. See "Hardware Resource Allocator Operation" in Appendix A, "System Configuration," in your hardware installation book.

NOTE:
All of the procedures in this chapter must be performed with **root** permission.

Purpose

This purpose of this chapter is to provide the information necessary to reload the optional feature software to a computer which has experienced a disk failure.

Installing the Hardware Resource Allocator Package

NOTE:
You must install and run the INTUITY CONVERSANT Hardware Resource Allocator before installing any of the INTUITY CONVERSANT System Version 6.0 base or optional packages.

To install this optional feature package, do the following:

1. If you are not already logged in as **root**, do so now.
2. Enter **pkgadd -d diskette1**

   The system displays the following message:

   ```
   Insert diskette into Floppy Drive 1.
   Type [go] when ready,
       or [q] to quit:  (default:  go)
   ```

3. Insert the diskette labeled “Hardware Resource Allocator 1 of 1” into the diskette drive. See “Inserting and Removing Diskettes” in Chapter 3, “Common System Procedures,” for the procedure.
4. Press (ENTER).

   The system displays the following message:

   ```
   Installation in progress -- do not remove the diskette.

   The following packages are available:
     1. config     INTUITY Hardware Resource Allocator
                   (i486)

   Select package(s) you wish to process (or ‘all’ to
   process all packages). (default: all) [?,??,q]:
   ```

5. Press (ENTER).

   The system displays the following message:

   ```
   PROCESSING:
   Set: INTUITY Hardware Resource Allocator (config) from
   <diskette1>

   INTUITY Hardware Resource Allocator
   (i486)
   Using </> as the package base directory.
   ```

   The system displays several status messages and then the following message:

   ```
   Installation of INTUITY Hardware Resource Allocator
   (config) was successful.
   ```

```
Insert diskette into Floppy Drive 1.
Type [go] when ready,
    or [q] to quit:  (default:  go)
```

6. Remove the diskette labeled “Hardware Resource Allocator 1 of 1” from the diskette drive. See “Inserting and Removing Diskettes” in Chapter 3, “Common System Procedures,” for the procedure.
7. Enter **q**

Run the INTUITY CONVERSANT Hardware Resource Allocator to obtain a current configuration listing for your system. See “Hardware Resource Allocator Operation” in Appendix A, “System Configuration”.

CAUTION:

It is very important that you run the INTUITY CONVERSANT Hardware Resource Allocator and obtain the output from it. The information is needed to install software packages in order to correctly set addresses for interrupts, I/O, etc.

Installing the Asynchronous Host Toolkit

To install this optional feature package, do the following:

1. If you are not already logged in as **root**, do so now.
2. Enter **pkgadd -d diskette1**

   The system displays the following message:

   ```
   Insert diskette into Floppy Drive 1.
   Type [go] when ready,
       or [q] to quit:  (default:  go)
   ```

3. Insert the diskette labeled “CGS Asynchronous Host Toolkit 1 of 1” into the diskette drive. See “Inserting and Removing Diskettes” in Chapter 3, “Common System Procedures,” for the procedure.
4. Press ENTER.

   The system displays the following message:

   ```
   Installation in progress -- do not remove the diskette.

   The following packages are available:
     1. asynchost  INTUITY CSG Asynchronous Host Toolkit
                   (i486)

   Select package(s) you wish to process (or ‘all’ to
   process all packages). (default: all) [?,??,q]:
   ```

5. Press (ENTER).

   The system displays the following message:

```
PROCESSING:
Set: INTUITY CSG Asynchronous Host Toolkit (asynchost)
from <diskette1>

INTUITY CSG Asynchronous Host Toolkit
(i486)
Using </> as the package base directory.
Lucent Technologies Inc.
Enter number of host lines to be configured, 1 or 2:
```

6. Enter the number of lines to be configured.

   This is the number of lines your system will be using to communicate with the host.

   If you entered **1**, the system displays the following message:

```
Enter asynchronous request function number, 1 or 2:
```

   NOTE:
   Entering **1** will turn on the DIP for hostreq1 host line only.
   Entering **2** will turn on the DIP for hostreq2 host line only

   If you entered **2**, the system displays the following message:

```
Enter asynchronous request function number, S or D:
```

   NOTE:
   Entering **S** will turn on both host DIPs and they will work independently of each other.
   Entering **D** will turn on both host DIPs and they will work in conjunction with each other.

7. Enter the request number function.

   The system displays the following message:

```
Enter tty port for the single line (e.q., ttys02):
```

   NOTE:
   The tty port number is assigned to the port on the asynchronous circuit card to which you are connecting. See Chapter 3, “Making Cable Connections,” in *INTUITY™ CONVERSANT® System Version 6.0 MAP/ 100 New System Installation*, 538-310-176.

   You can also determine the available tty addresses by viewing the **/dev** file.

8. Enter the tty port number you will be using.

   The system displays the following message:

   ```
   Installation of INTUITY CGS Asynchronous Host Toolkit
   (asynchost) was successful.
   ```

   ```
   Insert diskette into Floppy Drive 1.
   Type [go] when ready,
       or [q] to quit:  (default:  go)
   ```

9. Remove the diskette labeled "CGS Asynchronous Host Toolkit 1 of 1" from the diskette drive. See "Inserting and Removing Diskettes" in Chapter 3, "Common System Procedures," for the procedure.

Installing the ASYNC_TEST Transaction Script Builder Backup

To install this optional feature package, do the following:

1. If you are not already logged in as **root**, do so now.
2. Enter **pkgadd -d diskette1**

   The system displays the following message:

   ```
   Insert diskette into Floppy Drive 1.
   Type [go] when ready,
       or [q] to quit:  (default:  go)
   ```

3. Insert the diskette labeled "ASYNC_TEST Transaction SB Backup 1 of 1" into the diskette drive. See "Inserting and Removing Diskettes" in Chapter 3, "Common System Procedures," for the procedure.
4. Press (ENTER).

   The system displays the following message:

   ```
   Installation in progress -- do not remove the diskette.
   ```

   ```
   The following packages are available:
     1. asynctest  INTUITY ASYNC_TEST SB Backup
                   (i486)
   ```

   ```
   Select package(s) you wish to process (or 'all' to
   process all packages). (default: all) [?,??,q]:
   ```

5. Press (ENTER).

   The system displays the following message:

   ```
   PROCESSING:
   Set: INTUITY ASYNC_TEST SB Backup (asynctest) from
   <diskette1>
   ```

```
INTUITY ASYNC_TEST SB Backup
(i486)
Using </> as the package base directory.
Lucent Technologies Inc.
```

The system displays several status messages and then the following message:

```
Installation of INTUITY ASYNC_TEST SB Backup
(asynctest) was successful.

Insert diskette into Floppy Drive 1.
Type [go] when ready,
    or [q] to quit:  (default:  go)
```

6. Remove the diskette labeled “ASYNC_TEST Transaction SB Backup 1 of 1” from the diskette drive. See “Inserting and Removing Diskettes” in Chapter 3, “Common System Procedures,” for the procedure.

Installing the ASYNC_TEST Speech Script Builder Backup

To install this optional feature package, do the following:

1. If you are not already logged in as **root**, do so now.
2. Enter **pkgadd -d diskette1**

   The system displays the following message:

   ```
   Insert diskette into Floppy Drive 1.
   Type [go] when ready,
       or [q] to quit:  (default:  go)
   ```

3. Insert the diskette labeled “ASYNC_TEST Speech SB Backup 1 of 1” into the diskette drive. See “Inserting and Removing Diskettes” in Chapter 3, “Common System Procedures,” for the procedure.
4. Press (ENTER).

   The system displays the following message:

   ```
   Installation in progress -- do not remove the diskette.

   The following packages are available:
     1. asynctest  INTUITY ASYNC_TEST SB Backup
                   (i486)

   Select package(s) you wish to process (or ‘all’ to
   process all packages). (default: all) [?,??,q]:
   ```

5. Press (ENTER).

   The system displays the following message:

   ```
   PROCESSING:
   Set: INTUITY ASYNC_TEST SB Backup (asynctest) from
   <diskette1>
   ```

   ```
   INTUITY ASYNC_TEST SB Backup
   (i486)
   Using </> as the package base directory.
   Lucent Technologies Inc.
   ```

   The system displays several status messages and then the following message:

   ```
   Installation of INTUITY ASYNC_TEST SB Backup
   (asynctest) was successful.
   ```

   ```
   Insert diskette into Floppy Drive 1.
   Type [go] when ready,
       or [q] to quit:  (default:  go)
   ```

6. Enter **q**

7. Remove the diskette labeled “ASYNC_TEST Speech SB Backup 1 of 1” from the diskette drive. See “Inserting and Removing Diskettes” in Chapter 3, “Common System Procedures,” for the procedure.

Installing the Adjunct/Switch Application Interface Packages

The ASAI packages can be installed on a system that is using:

- An IPCI circuit card
- A LAN circuit card

Installing ASAI on a System Using an IPCI circuit card

The ASAI packages must be installed in the following order:

- AT&T CALLVISOR PC ISDN
- AT&T CALLVISOR PC LAN Gateway
- AT&T CALLVISOR PC ASAI

Installing the CALLVISOR PC ISDN Package

To install the CALLVISOR PC ISDN package, do the following:

1. If you are not already logged in as **root**, do so now.
2. Enter **pkgadd -d diskette1**

   The system displays the following message:

   ```
   Insert diskette into Floppy Drive 1.
   Type [go] when ready,
       or [q] to quit:  (default:  go)
   ```

3. Insert the diskette labeled “AT&T CALLVISOR PC ISDN Package 1 of 1” into the diskette drive. See “Inserting and Removing Diskettes” in Chapter 3, “Common System Procedures,” for the procedure.
4. Press (ENTER).

   The system displays the following message:

   ```
   Installation in progress -- do not remove the diskette.
   ```

   ```
   The following packages are available:
     1. cvisdn     AT&T CALLVISOR PC ISDN Package
                   (i486)
   ```

   ```
   Select package(s) you wish to process (or ‘all’ to
   process all packages). (default: all) [?,??,q]:
   ```

5. Press (ENTER).

   The system displays the following message:

   ```
   PROCESSING:
   Set: AT&T CALLVISOR PC ISDN Package (cvisdn) from
   <diskette1>
   ```

   ```
   INTUITY CALLVISOR PC ISDN Package
   (i486)
   Using </> as the package base directory.
   Lucent Technologies Inc.
   ```

   ```
   Enter the number of IPCI boards installed on this
   machine. (default: 1) [1-4,?]
   ```

6. Enter the number of PC/ISDN (IPCI) circuit cards installed in your system

   The system displays the following message:

   ```
   Enter the Interrupt Vector Number (IVN) for the IPCI
   boards. (default: 2) [2-3,?]
   ```

7. Enter the interrupt vector number for the PC/ISDN (IPCI) circuit cards installed in your system. The interrupt vector number is obtained from the INTUITY CONVERSANT Hardware Resource Allocator. See "Hardware Resource Allocator Operation" in Appendix A, "System Configuration".

   The system displays the following message:

   ```
   For IPCI board 1,
   Enter the 5 digit SCMA value. (default: d0000) [?]
   ```

8. Enter the SCMA value for the PC/ISDN (IPCI) circuit cards installed in your system. The interrupt vector number is obtained from the INTUITY CONVERSANT Hardware Resource Allocator. See "Hardware Resource Allocator Operation" in Appendix A, "System Configuration".

   The system displays the following message:

   ```
   Enter the desired version. (default: 1) [?]
   ```

9. Enter the desired version for the PC/ISDN (IPCI) circuit cards installed in your system

   NOTE:
   Enter version 1 if your system is connected to a G3V3 switch.
   Enter version 2 if your system is connected to a G3V4 switch.

   The system displays the following message:

   ```
   Enter for higher version operation. (default: 1)
   [0-1,?]
   ```

10. Press (ENTER).

    The system displays the following message:

    ```
    Enter for lower version operation. (default: 1) [0-1,?]
    ```

11. Press (ENTER).

    The system displays several messages followed by the following message:

    ```
    The UNIX Operating System kernel will be rebuilt to
    include your configuration changes during the next
    system reboot.
    ```

    ```
    Remove the diskette from the drive.
    ```

    ```
    To reboot the system, execute the command:
    shutdown -i6 -y -g0
    ```

12. Remove the diskette labeled "AT&T CALLVISOR PC ISDN Package 1 of 1" from the diskette drive. See "Inserting and Removing Diskettes" in Chapter 3, "Common System Procedures," for the procedure.

13. Continue with the next procedure, "Installing the CALLVISOR PC LAN Gateway Package."

Installing the CALLVISOR PC LAN Gateway Package

To install the CALLVISOR PC LAN Gateway package, do the following:

1. Enter **pkgadd -d diskette1**

   The system displays the following message:

   ```
   Insert diskette into Floppy Drive 1.
   Type [go] when ready,
       or [q] to quit:  (default:  go)
   ```

2. Insert the diskette labeled "AT&T CALLVISOR PC LAN Gateway Package 1 of 1" into the diskette drive. See "Inserting and Removing Diskettes" in Chapter 3, "Common System Procedures," for the procedure.

3. Press (ENTER).

   The system displays the following message:

   ```
   Installation in progress -- do not remove the diskette.
   ```

   ```
   The following packages are available:
     1. cvesai     AT&T CALLVISOR PC LAN Gateway Package
                   (i486)
   ```

   ```
   Select package(s) you wish to process (or 'all' to
   process all packages). (default: all) [?,??,q]:
   ```

4. Press (ENTER).

   The system displays the following message:

   ```
   PROCESSING:
   Set: AT&T CALLVISOR PC LAN Gateway Package (cvesai)
   from <diskette1>
   ```

   ```
   AT&T CALLVISOR PC LAN Gateway Package
   (i486)
   Using </> as the package base directory.
   Lucent Technologies Inc.
   ```

   ```
   This machine currently has X BRI links administered
   There are X links available for use as LAN Gateway
   links.
   ```

   ```
   Enter the number of LAN links to be installed (<=X):
   ```

5. Enter the number of LAN links used by your system.

   NOTE:
   The INTUITY CONVERSANT system does not require any LAN links. If your system needs a LAN connection for other software, establish the links now.

   The system displays the following message:

```
The UNIX Operating System kernel will be rebuilt to
include your configuration changes during the next
system reboot.

Installation of the AT&T CALLVISOR PC LAN Gateway
Package (cvesai) was successful.

***IMPORTANT NOTICE***
    If installation of all desired packages is
    complete, the machine should be rebooted to ensure
    sane operation. Execute the shutdown command with
    appropriate options and wait for the "Console
    Login:" prompt.
```

6. Remove the diskette labeled "AT&T CALLVISOR PC LAN Gateway Package 1 of 1" from the diskette drive. See "Inserting and Removing Diskettes" in Chapter 3, "Common System Procedures," for the procedure.
7. Continue with the next procedure, "Installing the CALLVISOR PC ASAI Package."

Installing the CALLVISOR PC ASAI Package

To install the CALLVISOR PC ASAI package, do the following:

1. Enter **pkgadd -d diskette1**

   The system displays the following message:

   ```
   Insert diskette into Floppy Drive 1.
   Type [go] when ready,
       or [q] to quit:  (default:  go)
   ```

2. Insert the diskette labeled "CALLVISOR PC ASAI Package 1 of 1" into the diskette drive. See "Inserting and Removing Diskettes" in Chapter 3, "Common System Procedures," for the procedure.
3. Press (ENTER).

   The system displays the following message:

   ```
   Installation in progress -- do not remove the diskette.

   The following packages are available:
     1. cvasai     AT&T CALLVISOR PC ASAI Package
                   (i486)

   Select package(s) you wish to process (or 'all' to
   process all packages). (default: all) [?,??,q]:
   ```

4. Press (ENTER).

   The system displays the following message:

   ```
   Configuring cvasai for X ASAI Node(s)
   ```

```
PROCESSING:
Set: AT&T CALLVISOR PC ASAI Package (cvasai) from
<diskette1>

AT&T CALLVISOR PC ASAI Package
(i486)
Using </> as the package base directory.
Lucent Technologies Inc.

Enter the number of ASAI Nodes.
(default: 1) [1-4,?]
```

5. Enter the number of ASAI nodes on your system

   The system displays several status messages and then the following message:

```
     The UNIX Operating System kernel will be rebuilt
     to include you configuration changes during the
     next system reboot.

Remove the diskette from the disk drive.

To reboot the system, execute the command:
shutdown -i6 -y -g0

To power down the system, execute the command:
shutdown -i0 -y -g0

***IMPORTANT NOTICE***
    If installation of all desired packages is
    complete, the machine should be rebooted to ensure
    sane operation. Execute the shutdown command with
    appropriate options and wait for the “Console
    Login:” prompt.

Installation of AT&T CALLVISOR PC ASAI Package (cvasai)
was successful.

Insert diskette into Floppy Drive 1.
Type [go] when ready,
    or [q] to quit:  (default:  go)
```

6. Enter **q**

7. Remove the diskette labeled “CALLVISOR PC ASAI Package 1 of 1” from the diskette drive. See “Inserting and Removing Diskettes” in Chapter 3, “Common System Procedures,” for the procedure.

8. Reboot the system. See “Rebooting the UNIX System” in Chapter 3, “Common System Procedures,” for the procedure.

Installing ASAI on a System Using a LAN Circuit Card

The ASAI packages must be installed in the following order:

- AT&T CALLVISOR PC ISDN
- AT&T CALLVISOR PC LAN Gateway
- AT&T CALLVISOR PC ASAI

Installing the CALLVISOR PC ISDN Package

To install the CALLVISOR PC ISDN package, do the following:

1. If you are not already logged in as **root**, do so now.
2. Enter **pkgadd -d diskette1**

   The system displays the following message:

   ```
   Insert diskette into Floppy Drive 1.
   Type [go] when ready,
       or [q] to quit:  (default:  go)
   ```

3. Insert the diskette labeled “AT&T CALLVISOR PC ISDN Package 1 of 1” into the diskette drive. See “Inserting and Removing Diskettes” in Chapter 3, “Common System Procedures,” for the procedure.
4. Press (ENTER).

   The system displays the following message:

   ```
   Installation in progress -- do not remove the diskette.

   The following packages are available:
     1. cvisdn     AT&T CALLVISOR PC ISDN Package
                   (i486)

   Select package(s) you wish to process (or ‘all’ to
   process all packages). (default: all) [?,??,q]:
   ```

5. Press (ENTER).

   The system displays the following message:

   ```
   PROCESSING:
   Set: AT&T CALLVISOR PC ISDN Package (cvisdn) from
   <diskette1>

   INTUITY CALLVISOR PC ISDN Package
   (i486)
   Using </> as the package base directory.
   Lucent Technologies Inc.

   Enter the number of IPCI boards installed on this
   machine. (default: 1) [1-4,?]
   ```

6. Enter **0**

   The system displays the following message:

   ```
   Enter the desired version. (default: 1) [?]
   ```

7. Enter the desired version for the PC/ISDN (IPCI) circuit cards installed in your system

   NOTE:
   Enter version 1 if your system is connected to a G3V3 switch.
   Enter version 2 if your system is connected to a G3V4 switch.

   The system displays the following message:

   ```
   Enter for higher version operation. (default: 1)
   [0-1,?]
   ```

8. Press (ENTER).

   The system displays the following message:

   ```
   Enter for lower version operation. (default: 1) [0-1,?]
   ```

9. Press (ENTER).

   The system displays several messages followed by the following message:

   ```
   The UNIX Operating System kernel will be rebuilt to
   include your configuration changes during the next
   system reboot.

   Remove the diskette from the drive.

   To reboot the system, execute the command:
   shutdown -i6 -y -g0
   ```

10. Remove the diskette labeled “AT&T CALLVISOR PC ISDN Package 1 of 1” from the diskette drive. See “Inserting and Removing Diskettes” in Chapter 3, “Common System Procedures,” for the procedure.

11. Continue with the next procedure, “Installing the CALLVISOR PC LAN Gateway Package.”

Installing the CALLVISOR PC LAN Gateway Package

To install the CALLVISOR PC LAN Gateway package, do the following:

1. Enter **pkgadd -d diskette1**

   The system displays the following message:

   ```
   Insert diskette into Floppy Drive 1.
   Type [go] when ready,
       or [q] to quit:  (default:  go)
   ```

2. Insert the diskette labeled "AT&T CALLVISOR PC LAN Gateway Package 1 of 1" into the diskette drive. See "Inserting and Removing Diskettes" in Chapter 3, "Common System Procedures," for the procedure.

3. Press (ENTER).

   The system displays the following message:

   ```
   Installation in progress -- do not remove the diskette.
   ```

   ```
   The following packages are available:
     1. cvesai     AT&T CALLVISOR PC LAN Gateway Package
                   (i486)
   ```

   ```
   Select package(s) you wish to process (or 'all' to
   process all packages). (default: all) [?,??,q]:
   ```

4. Press (ENTER).

   The system displays the following message:

   ```
   PROCESSING:
   Set: AT&T CALLVISOR PC LAN Gateway Package (cvesai)
   from <diskette1>
   ```

   ```
   AT&T CALLVISOR PC LAN Gateway Package
   (i486)
   Using </> as the package base directory.
   Lucent Technologies Inc.
   ```

   ```
   This machine currently has X BRI links administered
   There are X links available for use as LAN Gateway
   links.
   ```

   ```
   Enter the number of LAN links to be installed (<=X):
   ```

5. Enter the number of LAN links used by your system.

   NOTE:
   The INTUITY CONVERSANT system requires one LAN link. If your system needs additional LAN connections for other software, establish the links now.

   The system displays the following message:

   ```
   Enter the destination for LAN link 1 [definity]:
   ```

6. Enter your system's switch destination.

```
The UNIX Operating System kernel will be rebuilt to
include your configuration changes during the next
system reboot.

Installation of the AT&T CALLVISOR PC LAN Gateway
Package (cvesai) was successful.

***IMPORTANT NOTICE***
    If installation of all desired packages is
    complete, the machine should be rebooted to ensure
    sane operation. Execute the shutdown command with
    appropriate options and wait for the "Console
    Login:" prompt.
```

7. Remove the diskette labeled "AT&T CALLVISOR PC LAN Gateway Package 1 of 1" from the diskette drive. See "Inserting and Removing Diskettes" in Chapter 3, "Common System Procedures," for the procedure.
8. Continue with the next procedure, "Installing the CALLVISOR PC ASAI Package."

Installing the CALLVISOR PC ASAI Package

To install the CALLVISOR PC ASAI package, do the following:

1. Enter **pkgadd -d diskette1**

   The system displays the following message:

```
Insert diskette into Floppy Drive 1.
Type [go] when ready,
    or [q] to quit:  (default:  go)
```

2. Insert the diskette labeled "CALLVISOR PC ASAI Package 1 of 1" into the diskette drive. See "Inserting and Removing Diskettes" in Chapter 3, "Common System Procedures," for the procedure.
3. Press (ENTER).

   The system displays the following message:

```
Installation in progress -- do not remove the diskette.

The following packages are available:
  1. cvasai     AT&T CALLVISOR PC ASAI Package
                (i486)

Select package(s) you wish to process (or 'all' to
process all packages). (default: all) [?,??,q]:
```

4. Press (ENTER).

   The system displays the following message:

```
Configuring cvasai for X ASAI Node(s)
```

```
PROCESSING:
Set: AT&T CALLVISOR PC ASAI Package (cvasai) from
<diskette1>

AT&T CALLVISOR PC ASAI Package
(i486)
Using </> as the package base directory.
Lucent Technologies Inc.

Enter the number of ASAI Nodes.
(default: 1) [1-4,?]
```

5. Enter the number of ASAI nodes on your system

   The system displays several status messages and then the following message:

```
     The UNIX Operating System kernel will be rebuilt
     to include you configuration changes during the
     next system reboot.

Remove the diskette from the disk drive.

To reboot the system, execute the command:
shutdown -i6 -y -g0

To power down the system, execute the command:
shutdown -i0 -y -g0

***IMPORTANT NOTICE***
    If installation of all desired packages is
    complete, the machine should be rebooted to ensure
    sane operation. Execute the shutdown command with
    appropriate options and wait for the “Console
    Login:” prompt.

Installation of AT&T CALLVISOR PC ASAI Package (cvasai)
was successful.

Insert diskette into Floppy Drive 1.
Type [go] when ready,
    or [q] to quit:  (default:  go)
```

6. Enter **q**

7. Remove the diskette labeled “CALLVISOR PC ASAI Package 1 of 1” from the diskette drive. See “Inserting and Removing Diskettes” in Chapter 3, “Common System Procedures,” for the procedure.

8. Reboot the system. See “Rebooting the UNIX System” in Chapter 3, “Common System Procedures,” for the procedure.

Installing the Adjunct/Switch Application Interface Package

To install this optional feature package, do the following:

1. If you are not already logged in as **root**, do so now.
2. Enter **pkgadd -d diskette1**

   The system displays the following message:

   ```
   Insert diskette into Floppy Drive 1.
   Type [go] when ready,
       or [q] to quit:  (default:  go)
   ```

3. Insert the diskette labeled “Adjunct/Switch Application Interface Package 1 of 3” into the diskette drive. See “Inserting and Removing Diskettes” in Chapter 3, “Common System Procedures,” for the procedure.
4. Press (ENTER).

   The system displays the following message:

   ```
   Installation in progress -- do not remove the diskette.

   The following packages are available:
     1. asai       INTUITY Adjunct/Switch Application
                   Interface Package (i486)

   Select package(s) you wish to process (or ‘all’ to
   process all packages). (default: all) [?,??,q]:
   ```

5. Press (ENTER).

   The system displays the following message:

   ```
   PROCESSING:
   Set: INTUITY Adjunct/Switch Application Interface
   Package (asai) from <diskette1>

   INTUITY Adjunct/Switch Application Interface Package
   (i486)
   Using </> as the package base directory.
   Lucent Technologies Inc.
   ```

   The system displays several status messages and then the following message:

   ```
   READY TO PROCESS:
       Package: INTUITY Adjunct/Switch Application
                Interface Package (asai) diskette 2 of 3

   Insert diskette 2 of 3 into Floppy Drive 1.
   Type [go] when ready,
       or [q] to quit:  (default:  go)
   ```

6. Remove the diskette labeled “Adjunct/Switch Application Interface Package 1 of 3” from the diskette drive. See “Inserting and Removing Diskettes” in Chapter 3, “Common System Procedures,” for the procedure.

7. Insert the diskette labeled “Adjunct/Switch Application Interface Package 2 of 3” into the diskette drive. See “Inserting and Removing Diskettes” in Chapter 3, “Common System Procedures,” for the procedure.

8. Press ENTER.

   The system displays several status messages and then the following message:

```
READY TO PROCESS:
    Package: INTUITY Adjunct/Switch Application
             Interface Package (asai) diskette 3 of 3

Insert diskette 3 of 3 into Floppy Drive 1.
Type [go] when ready,
    or [q] to quit:  (default:  go)
```

9. Remove the diskette labeled “Adjunct/Switch Application Interface Package 2 of 3” from the diskette drive. See “Inserting and Removing Diskettes” in Chapter 3, “Common System Procedures,” for the procedure.

10. Insert the diskette labeled “Adjunct/Switch Application Interface Package 3 of 3” into the diskette drive. See “Inserting and Removing Diskettes” in Chapter 3, “Common System Procedures,” for the procedure.

11. Press ENTER.

    The system displays several status messages and then the following message:

```
     The UNIX Operating System kernel will be rebuilt
     to include your configuration changes during the
     next system reboot.

Installation of Adjunct/Switch Application Interface
Package (asai) was successful.

Insert diskette into Floppy Drive 1.
Type [go] when ready,
    or [q] to quit:  (default:  go)
```

12. Enter **q**

13. Remove the diskette labeled “Adjunct/Switch Application Interface Package 3 of 3” from the diskette drive. See “Inserting and Removing Diskettes” in Chapter 3, “Common System Procedures,” for the procedure.

14. Reboot the system. See “Rebooting the UNIX System” in Chapter 3, “Common System Procedures,” for the procedure.

For more information on this feature package, see *INTUITY™ CONVERSANT® Version 6.0 Communication Development*, 585-310-763.

Installing the Analog Switch Interface Package

To install this optional feature package, do the following:

1. If you are not already logged in as **root**, do so now.
2. Enter **pkgadd -d diskette1**

   The system displays the following message:

   ```
   Insert diskette into Floppy Drive 1.
   Type [go] when ready,
       or [q] to quit:  (default:  go)
   ```

3. Insert the diskette labeled “Analog Switch Interface - (country) 1 of 1” into the diskette drive. See “Inserting and Removing Diskettes” in Chapter 3, “Common System Procedures,” for the procedure.
4. Press (ENTER).

   The system displays the following message:

   ```
   Installation in progress -- do not remove the diskette.
   ```

   ```
   The following packages are available:
     1. usswtch    INTUITY Analog Switch Interface Package
                       - US
                   (i486)
   ```

   ```
   Select package(s) you wish to process (or ‘all’ to
   process all packages). (default: all) [?,??,q]:
   ```

   NOTE:
   The analog switch interface package used in this example is for the United States (US). The name will change depending on the country chosen.

5. Press (ENTER).

   The system displays the following message:

   ```
   PROCESSING:
   Set: INTUITY Analog Switch Interface Package - US
   (usswtch) from <diskette1>
   ```

   ```
   INTUITY Analog Switch Interface Package - US
   (i486)
   Using </> as the package base directory.
   Lucent Technologies Inc.
   ```

   The system displays several status messages and then the following message:

   ```
   Installation of INTUITY Analog Switch Interface Package
   - US (usswtch) was successful.
   ```

```
Insert diskette into Floppy Drive 1.
Type [go] when ready,
    or [q] to quit:  (default:  go)
```

6. Enter **q**
7. Remove the diskette labeled “Analog Switch Interface - (country) 1 of 1” from the diskette drive. See “Inserting and Removing Diskettes” in Chapter 3, “Common System Procedures,” for the procedure.

Installing the Call Bridge Application Package

To install this optional feature package, do the following:

1. If you are not already logged in as **root**, do so now.
2. Enter **pkgadd -d diskette1**

   The system displays the following message:

   ```
   Insert diskette into Floppy Drive 1.
   Type [go] when ready,
       or [q] to quit:  (default:  go)
   ```

3. Insert the diskette labeled “Call Bridge Application Package 1 of 1” into the diskette drive. See “Inserting and Removing Diskettes” in Chapter 3, “Common System Procedures,” for the procedure.
4. Press (ENTER).

   The system displays the following message:

   ```
   Installation in progress -- do not remove the diskette.

   The following packages are available:
     1. xferdip    INTUITY Call Bridge Application Package
                   (i486)

   Select package(s) you wish to process (or ‘all’ to
   process all packages). (default: all) [?,??,q]:
   ```

5. Press (ENTER).

   The system displays the following message:

   ```
   PROCESSING:
   Set: INTUITY Call Bridge Application Package (xferdip)
   from <diskette1>

   INTUITY Call Bridge Application Package
   (i486)
   Using </> as the package base directory.
   Lucent Technologies Inc.

   After the installation, do you wish to activate
   bridging capability? (y/n)
   ```

6. Enter **y**

   The system displays several status messages and then the following message:

   ```
   Installation of INTUITY Call Bridge Application Package
   (xferdip) was successful.
   ```

   ```
   Insert diskette into Floppy Drive 1.
   Type [go] when ready,
       or [q] to quit:  (default:  go)
   ```

7. Enter **q**

8. Remove the diskette labeled "Call Bridge Application Package 1 of 1" from the diskette drive. See "Inserting and Removing Diskettes" in Chapter 3, "Common System Procedures," for the procedure.

Installing the Call Classification Analysis Package

NOTE:
If you are installing the package and feature_tst is already installed on your system (as in assisted upgrades), once you have finished installing all other desired, you must remove feature_tst and reinstall it in order to select the CCA test.

To install this optional feature package, do the following:

1. Make sure the ASP driver has been installed by entering **pkginfo |pg**

   If the ASP driver has been installed there will be a line similar to the following:

   ```
   intuity   asp      INTUITY ASP Driver Package
   ```

   Continue with Step 2.

   If the ASP driver has not been installed, see "Speech and Signal Processor (AYC43) Circuit Card," in Chapter 5, "Replacing, Installing, or Upgrading Circuit Cards"," for the procedure to load the driver.

2. At the UNIX prompt, enter **pkgadd -d diskette1**

   The system displays the following message:

   ```
   Insert diskette into Floppy Drive 1.
   Type [go] when ready,
       or [q] to quit:  (default:  go)
   ```

3. Insert the diskette labeled "Call Classification Analysis Package 1 of 1" into the diskette drive. See "Inserting and Removing Diskettes" in Chapter 3, "Common System Procedures," for the procedure.

4. Press (ENTER).

   The system displays the following message:

   ```
   Installation in progress -- do not remove the diskette.

   The following packages are available:
     1. cca        INTUITY Call Classification Analysis
                    Package (i486)

   Select package(s) you wish to process (or 'all' to
   process all packages). (default: all) [?,??,q]:
   ```

5. Press (ENTER).

   The system displays the following message:

   ```
   PROCESSING:
   Set: INTUITY Call Classification Analysis Package (cca)
   from <diskette1>

   INTUITY Call Classification Analysis Package
   (i486)
   Using </> as the package base directory.
   Lucent Technologies Inc.
   ```

   The system displays several status messages and then the following message:

   ```
   Installation of INTUITY Call Classification Analysis
   Package (cca) was successful.

   Insert diskette into Floppy Drive 1.
   Type [go] when ready,
       or [q] to quit:  (default:  go)
   ```

6. Enter **q**

   The system displays the UNIX prompt.

7. Make sure that the light on the diskette drive is off and remove the diskette. See "Inserting and Removing Diskettes" in Chapter 3, "Common System Procedures," for the procedure.

For more information on this feature package, see *INTUITY™ CONVERSANT® Version 6.0 Application Development with Script Builder*, 585-310-760, and *INTUITY™ CONVERSANT® Version 6.0 Communication Development*, 585-310-763.

Installing the Data Collection Toolkit

To install this optional feature package, do the following:

1. If you are not already logged in as **root**, do so now.
2. Enter **pkgadd -d diskette1**

   The system displays the following message:

   ```
   Insert diskette into Floppy Drive 1.
   Type [go] when ready,
       or [q] to quit:  (default:  go)
   ```

3. Insert the diskette labeled “Data Collection Toolkit 1 of 3” into the diskette drive. See “Inserting and Removing Diskettes” in Chapter 3, “Common System Procedures,” for the procedure.
4. Press (ENTER).

   The system displays the following message:

   ```
   Installation in progress -- do not remove the diskette.

   The following packages are available:
     1. dctoolkit  INTUITY Data Collection Toolkit
                   (i486)

   Select package(s) you wish to process (or ‘all’ to
   process all packages). (default: all) [?,??,q]:
   ```

5. Press (ENTER).

   The system displays the following message:

   ```
   PROCESSING:
   Set: INTUITY Data Collection Toolkit (dctoolkit) from
   <diskette1>

   INTUITY Data Collection Toolkit
   (i486)
   Using </> as the package base directory.
   Lucent Technologies Inc.

   READY TO PROCESS:
       Package: INTUITY Data Collection Toolkit
                (dctoolkit) diskette 2 of 3

   Insert diskette 2 of 3 into Floppy Drive 1.
   Type [go] when ready,
       or [q] to quit:  (default:  go)
   ```

6. Remove the diskette labeled “Data Collection Toolkit 1 of 3” from the diskette drive. See “Inserting and Removing Diskettes” in Chapter 3, “Common System Procedures,” for the procedure.

7. Insert the diskette labeled “Data Collection Toolkit 2 of 3” into the diskette drive. See “Inserting and Removing Diskettes” in Chapter 3, “Common System Procedures,” for the procedure.

8. Press (ENTER).

   The system displays the following message:

```
READY TO PROCESS:
    Package: INTUITY Data Collection Toolkit
             (dctoolkit) diskette 3 of 3

Insert diskette 3 of 3 into Floppy Drive 1.
Type [go] when ready,
    or [q] to quit:  (default:  go)
```

9. Remove the diskette labeled “Data Collection Toolkit 2 of 3” from the diskette drive. See “Inserting and Removing Diskettes” in Chapter 3, “Common System Procedures,” for the procedure.

10. Insert the diskette labeled “Data Collection Toolkit 3 of 3” into the diskette drive. See “Inserting and Removing Diskettes” in Chapter 3, “Common System Procedures,” for the procedure.

11. Press (ENTER).

    The system displays several status messages and then the following message:

```
Installation of INTUITY Data Collection Toolkit
(dctoolkit) was successful.

Insert diskette into Floppy Drive 1.
Type [go] when ready,
    or [q] to quit:  (default:  go)
```

12. Enter **q**

13. Remove the diskette labeled “Data Collection Toolkit 3 of 3” from the diskette drive. See “Inserting and Removing Diskettes” in Chapter 3, “Common System Procedures,” for the procedure.

Installing the Dial Pulse Recognition Package

To install this optional feature package, do the following:

1. If you are not already logged in as **root**, do so now.

2. Enter **pkgadd -d diskette1**

   The system displays the following message:

```
Insert diskette into Floppy Drive 1.
Type [go] when ready,
    or [q] to quit:  (default:  go)
```

3. Insert the diskette labeled “Dial Pulse Recognition 1 of 1” into the diskette drive. See “Inserting and Removing Diskettes” in Chapter 3, “Common System Procedures,” for the procedure.

4. Press (ENTER).

   The system displays the following message:

   ```
   Installation in progress -- do not remove the diskette.

   The following packages are available:
     1. dpr        INTUITY Dial-Pulse Recognition Package
                   (i486)

   Select package(s) you wish to process (or ‘all’ to
   process all packages). (default: all) [?,??,q]:
   ```

5. Press (ENTER).

   The system displays the following message:

   ```
   PROCESSING:
   Set: INTUITY Dial-Pulse Recognition Package (dpr) from
   <diskette1>

   INTUITY Dial-Pulse Recognition Package
   (i486)
   Using </> as the package base directory.
   Lucent Technologies Inc.
   ```

   The system displays several status messages and then the following message:

   ```
   Installation of INTUITY Dial-Pulse Recognition Package
   (dpr) was successful.

   Insert diskette into Floppy Drive 1.
   Type [go] when ready,
       or [q] to quit:  (default:  go)
   ```

6. Enter **q**

7. Remove the diskette labeled “Dial Pulse Recognition 1 of 1” from the diskette drive. See “Inserting and Removing Diskettes” in Chapter 3, “Common System Procedures,” for the procedure.

Installing the Enhanced Basic Speech Package

To install this optional feature package, do the following:

1. If you are not already logged in as **root**, do so now.
2. Enter **pkgadd -d diskette1**

   The system displays the following message:

   ```
   Insert diskette into Floppy Drive 1.
   Type [go] when ready,
       or [q] to quit:  (default:  go)
   ```

3. Insert the diskette labeled "Enhanced Basic Speech Package - *Language* 1 of 1" into the diskette drive. See "Inserting and Removing Diskettes" in Chapter 3, "Common System Procedures," for the procedure.
4. Press (ENTER).

   The system displays the following message:

   ```
   Installation in progress -- do not remove the diskette.
   ```

   ```
   The following packages are available:
     1. ebspchUS   Enhanced Basic Speech - US English -
                   Female
                   (i486)
   ```

   ```
   Select package(s) you wish to process (or 'all' to
   process all packages). (default: all) [?,??,q]:
   ```

5. Press (ENTER).

   The system displays the following message:

   ```
   PROCESSING:
   Set: Enhanced Basic Speech - US English - Female
   (ebspchUS) from <diskette1>
   ```

   ```
   INTUITY Enhanced Basic Speech - US English - Female
   (i486)
   Using </> as the package base directory.
   Lucent Technologies Inc.
   ```

   ```
   Installation of Enhanced Basic Speech - US English -
   Female (ebspchUS) was successful.
   ```

   ```
   Insert diskette into Floppy Drive 1.
   Type [go] when ready,
       or [q] to quit:  (default:  go)
   ```

6. Enter **q**

7. Remove the diskette labeled “Enhanced Basic Speech Package - *Language* 1 of 1” from the diskette drive. See “Inserting and Removing Diskettes” in Chapter 3, “Common System Procedures,” for the procedure.
8. Reboot the system. See “Rebooting the UNIX System” in Chapter 3, “Common System Procedures,” for the procedure.

Installing the External Alarms Package

To install this optional feature package, do the following:

1. If you are not already logged in as **root**, do so now.
2. Enter **pkgadd -d diskette1**

   The system displays the following message:

   ```
   Insert diskette into Floppy Drive 1.
   Type [go] when ready,
       or [q] to quit:  (default:  go)
   ```

3. Insert the diskette labeled “External Alarms Package 1 of 1” into the diskette drive. See “Inserting and Removing Diskettes” in Chapter 3, “Common System Procedures,” for the procedure.
4. Press (ENTER).

   The system displays the following message:

   ```
   Installation in progress -- do not remove the diskette.

   The following packages are available:
     1. relaybd    INTUITY External Alarms Package
                   (i486)

   Select package(s) you wish to process (or ‘all’ to
   process all packages). (default: all) [?,??,q]:
   ```

5. Press (ENTER).

   The system displays the following message:

   ```
   PROCESSING:
   Set: INTUITY External Alarms Package (relaybd) from
   <diskette1>

   INTUITY External Alarms Package
   (i486)
   Using </> as the package base directory.
   Lucent Technologies Inc.

   Do you want all currently defined Critical, Major, and
   Minor System messages to be assigned to Alarm Contact
   Sets 1, 2, and 3 respectively and all Alarm messages to
   be assigned to Alarm Contact Set 4 by default? (y or n):
   ```

6. Enter **y**

   The system displays several status messages and then the following message:

   ```
   The UNIX Operating System kernel will be rebuilt
   to include your configuration changes during the
   next system reboot.
   ```

   ```
   Ensure that the Relay Output Card has been physically
   installed with the address dip switch set to 0x240
   (1,2,3,5,6-ON 4-OFF)
   ```

   ```
   Installation of INTUITY External Alarm Package
   (relaybd) was successful.
   ```

   ```
   Insert diskette into Floppy Drive 1.
   Type [go] when ready,
       or [q] to quit:  (default:  go)
   ```

7. Enter **q**

8. Remove the diskette labeled "External Alarm Package 1 of 1" from the diskette drive. See "Inserting and Removing Diskettes" in Chapter 3, "Common System Procedures," for the procedure.

9. Reboot the system. See "Rebooting the UNIX System" in Chapter 3, "Common System Procedures," for the procedure.

Installing the Script Builder FAX Actions Package

To install the Script Builder FAX Actions package, do the following:

1. At the UNIX prompt, enter **pkgadd -d diskette1**

   The system displays the following message:

   ```
   Insert diskette into Floppy Drive 1.
   Type [go] when ready,
       or [q] to quit:  (default:  go)
   ```

2. Insert the diskette labeled "Script Builder FAX Actions 1 of 6" into the diskette drive. See "Inserting and Removing Diskettes" in Chapter 3, "Common System Procedures," for the procedure.

3. Press (ENTER).

   The system displays the following message:

   ```
   Installation in progress -- do not remove the diskette.
   ```

   ```
   The following packages are available:
     1. sbfax      INTUITY Script Builder Fax Actions
                   (i486)
   ```

```
Select package(s) you wish to process (or 'all' to
process all packages). (default: all) [?,??,q]:
```

4. Press (ENTER).

   The system displays the following message:

```
PROCESSING:
Set: INTUITY Script Builder Fax Actions (sbfax) from
<diskette1>

INTUITY Script Builder Fax Actions
(i486)
Using </> as the package base directory.

READY TO PROCESS:
    Package: INTUITY Script Builder Fax Actions
             (sbfax) diskette 2 of 6

Insert diskette 2 of 6 into Floppy Drive 1.
Type [go] when ready,
    or [q] to quit:  (default:  go)
```

5. Remove the diskette labeled "Script Builder Fax Actions 1 of 6" from the diskette drive. See "Inserting and Removing Diskettes" in Chapter 3, "Common System Procedures," for the procedure.

6. Insert the diskette labeled "Script Builder Fax Actions 2 of 6" into the diskette drive. See "Inserting and Removing Diskettes" in Chapter 3, "Common System Procedures," for the procedure.

7. Press (ENTER).

   The system displays the following message:

```
READY TO PROCESS:
    Package: INTUITY Script Builder Fax Actions
             (sbfax) diskette 3 of 6

Insert diskette 3 of 6 into Floppy Drive 1.
Type [go] when ready,
    or [q] to quit:  (default:  go)
```

8. Remove the diskette labeled "Script Builder Fax Actions 2 of 6" from the diskette drive. See "Inserting and Removing Diskettes" in Chapter 3, "Common System Procedures," for the procedure.

9. Insert the diskette labeled "Script Builder Fax Actions 3 of 6" into the diskette drive. See "Inserting and Removing Diskettes" in Chapter 3, "Common System Procedures," for the procedure.

10. Press (ENTER).

    The system displays the following message:

```
READY TO PROCESS:
    Package: INTUITY Script Builder Fax Actions
             (sbfax) diskette 4 of 6

Insert diskette 4 of 6 into Floppy Drive 1.
Type [go] when ready,
    or [q] to quit:  (default:  go)
```

11. Remove the diskette labeled “Script Builder Fax Actions 3 of 6” from the diskette drive. See “Inserting and Removing Diskettes” in Chapter 3, “Common System Procedures,” for the procedure.

12. Insert the diskette labeled “Script Builder Fax Actions 4 of 6” into the diskette drive. See “Inserting and Removing Diskettes” in Chapter 3, “Common System Procedures,” for the procedure.

13. Press (ENTER).

    The system displays the following message:

```
READY TO PROCESS:
    Package: INTUITY Script Builder Fax Actions
             (sbfax) diskette 5 of 6

Insert diskette 5 of 6 into Floppy Drive 1.
Type [go] when ready,
    or [q] to quit:  (default:  go)
```

14. Remove the diskette labeled “Script Builder Fax Actions 4 of 6” from the diskette drive. See “Inserting and Removing Diskettes” in Chapter 3, “Common System Procedures,” for the procedure.

15. Insert the diskette labeled “Script Builder Fax Actions 5 of 6” into the diskette drive. See “Inserting and Removing Diskettes” in Chapter 3, “Common System Procedures,” for the procedure.

16. Press (ENTER).

    The system displays the following message:

```
READY TO PROCESS:
    Package: INTUITY Script Builder Fax Actions
             (sbfax) diskette 6 of 6

Insert diskette 6 of 6 into Floppy Drive 1.
Type [go] when ready,
    or [q] to quit:  (default:  go)
```

17. Remove the diskette labeled “Script Builder Fax Actions 5 of 6” from the diskette drive. See “Inserting and Removing Diskettes” in Chapter 3, “Common System Procedures,” for the procedure.

18. Insert the diskette labeled “Script Builder Fax Actions 6 of 6” into the diskette drive. See “Inserting and Removing Diskettes” in Chapter 3, “Common System Procedures,” for the procedure.

19. Press (ENTER).

    The system displays the following message:

    ```
    Select the interrupt level for the FAX Circuit Card(s)
    from the following level:
            3
            4
            5
            6
            7
            9
            10
            11
            12
            14
            15
    enter choice:
    ```

20. Type in the interrupt level.

21. Press (ENTER).

    The system displays the following message:

    `Confirm.  Interrupt level X. (y/n)`

22. Enter **y**

    The system displays the following message:

    ```
    REMEMBER to set the jumpers on the FAX circuit card(s)
    to use interrupt X. Otherwise, the system will not
    function properly.
    ```

    ```
    Enter the code of the country in which this system will
    operate.  For a list of codes, consult your user
    documentation.  If you decide at a later date to change
    this setting, simply use the SetPlace.sb utility (see
    your user documentation.)
    ```

    `Enter choice:`

23. Type the appropriate country code from Table 10-1.

Table 10-1. Country Codes

Country: Code	Country: Code	Country: Code	Country: Code
USA: 10	Canada: 11	Algeria: 2130	American Samoa: 6840
Andorra: 330	Argentina: 540	Australia: 610	Austria: 430
Barring: 9730	Belgium: 320	Belize: 5010	Bolivia: 5910
Brazil: 550	Cameroon: 2370	Chile: 560	Columbia: 570
Costa Rica: 5060	Cyprus: 3570	Czech Republic/Slovakia: 420	Denmark: 450
Ecuador: 5930	Egypt: 200	El Salvador: 5030	Ethiopia: 2510
Fiji: 6790	Finland: 3580	France: 330	French Antilles: 5960
French Antillis Guadeloupe: 5900	French Polynesia: 6890	Gabon: 2410	German Dem Rep: 370
German Fed Rep: 490	Greece: 300	Guam: 6710	Guantanamo Bay: 530
Guatemala: 5020	Guyana: 5920	Haiti: 5090	Honduras: 5040
Hong Kong: 8520	Hungary: 360	Iceland: 3540	India: 910
Indonesia: 620	Iran: 980	Iraq: 9640	Ireland: 3530
Israel: 9720	Italy (Co): 390	Italy (PBX): 391	Ivory Coast: 2250
Japan 10: 810 (10 pulse per second)	Japan 20: 811 (20 pulse per second)	Japan 10 DID: 812 (10 pulse per second)	Japan 2 DID: 813 (10 pulse per second)
Jordan: 9620	Kenya: 2540	Korea: 820	Kuwait: 9650
Liberia: 2310	Libya: 2180	Liechtenstein: 410	Luxembourg: 3520
Malawi: 2650	Malaysia: 600	Mexico: 520	Monaco: 330
Morocco: 2120	Namibia: 2640	Netherlands: 310	Netherlands Antilles: 5990
Netherlands Antilles Aruba: 2970	New Caledonia: 6870	New Zealand: 640	Nicaragua: 5050
Nigeria: 2340	Norway: 470	Norway X: 471	Oman: 9680
Pakistan: 920	Panama: 5070	Papua New Guinea: 6750	Paraguay: 5950
Peru: 510	Philippines: 630	Poland: 480	Portugal: 3510
Qatar: 9740	Romania: 400	Saipan: 6700	San Marino: 390
Saudi Arabia: 9660	Senegal: 2210	Singapore: 650	South Africa: 270

Continued on next page

Table 10-1. Country Codes — *Continued*

Country: Code	Country: Code	Country: Code	Country: Code
Spain: 340	Sri Lanka: 940	Suriname: 5970	Sweden: 460
Switzerland: 410	Taiwan:8860	Thailand: 660	Tunisia: 2160
Turkey: 900	United Arab Emirates: 9710	U.K. (CO): 440	U.K. (PBX): 441
Uruguay: 5980	Vatican City: 390	Venezuela: 580	Yemen Arab Republic: 9670
Yugoslavia: 380			

24. Press (ENTER).

    The system displays the following message:

    `Confirm. The country is X. (y/n)`

25. Enter **y**

    The system displays the following message:

    ```
    Enter the number of faxingDips you want running on your
    system. Your application will work fine regardless of
    how many you choose. If you decide at a later date to
    change this setting, simply use the SetFaxDip.sb
    utility (see your user documentation.)

    For light expected FAX traffic                    enter 1
    For average expected FAX traffic                  enter 2
    For moderately heavy expected FAX traffic         enter 3
    For heavy expected FAX traffic                    enter 4

    enter choice:
    ```

    CAUTION:
    Using more than two faxingDips could cause your CPU idle time to be reduced to 0%. This will result in SPIO001 alarm messages and notification of the TSC.

26. Enter the **1** or **2** as appropriate.

    The system displays the following message:

    `Confirm. Number faxingDips is X. (y/n)`

27. Enter **y**

    The system displays the following message:

    ```
    If you currently have applications that use FAX
    Actions, re-verify and re-install them for best
    performance.

    Your system will have X running faxingDips

    The sbfax has been successfully installed. You must
    remove the last floppy disk.  The system will reboot
    shortly.

         The UNIX Operating System kernel will be rebuilt
         to include your configuration changes during the
         next system reboot.

    Installation of INTUITY Script Builder Fax Actions
    (sbfax) was successful.

    Insert diskette into Floppy Drive 1.
    Type [go] when ready,
        or [q] to quit:  (default:  go)
    ```

28. Enter **q**

29. Make sure that the light on the diskette drive is off and remove the diskette. See "Inserting and Removing Diskettes" in Chapter 3, "Common System Procedures," for the procedure.

30. Reboot the system. See "Rebooting the UNIX System" in Chapter 3, "Common System Procedures," for the procedure.

See the *INTUITY™ CONVERSANT® Version 6.0 Application Development with Script Builder*, 585-310-760, for more information on using Script Builder FAX Actions, as well as procedures to install the diskettes labeled "SBFAX_demo Backup Speech" and "Transmissions."

Installing the FlexWord Speech Recognition Package

Installing the FlexWord® Speech Recognition Package requires installing the following packages in the order shown:

- ASP Driver package
- FlexWord Recognition - Base
- FlexWord Recognition - U.S. English

Installing the ASP Driver

See "Speech and Signal Processor (AYC43) Circuit Card" in Chapter 5, "Replacing, Installing, or Upgrading Circuit Cards"," for the procedure.

Installing FlexWord Recognition - Base

To install the FlexWord Recognition - Base package, do the following:

1. Stop the voice system. See "Stopping the Voice System" in Chapter 3, "Common System Procedures," for the procedure.
2. Ensure that the ASP Driver package has been installed.
3. At the UNIX prompt, enter **pkgadd -d diskette1**

   The system displays the following message:

   ```
   Insert diskette into Floppy Drive 1.
   Type [go] when ready,
       or [q] to quit:  (default:  go)
   ```

4. Insert the diskette labeled "FlexWord Recognition - Base 1 of 1" into the diskette drive. See "Inserting and Removing Diskettes" in Chapter 3, "Common System Procedures," for the procedure.
5. Press (ENTER).

   The system displays the following message:

   ```
   Installation in progress -- do not remove the diskette.
   ```

   ```
   The following packages are available:
     1. flexrecog  INTUITY FlexWord Recognition - Base
                   (i486)
   ```

   ```
   Select package(s) you wish to process (or 'all' to
   process all packages). (default: all) [?,??,q]:
   ```

   NOTE:
   If you did not stop the voice system, the system displays the following message at this point:

   ```
   The voice system is currently running and must be
   stopped in order to install this package.

   Is it ok to STOP the voice system ? [y/n]
   ```

   Enter **y**

6. Press (ENTER).

   The system displays the following message:

   ```
   PROCESSING:
   Set: INTUITY FlexWord Recognition - Base (flexrecog)
   from <diskette1>
   ```

   ```
   INTUITY FlexWord Recognition - Base
   (i486)
   Using </> as the package base directory.
   ```

   The system displays several status messages and then the following message:

   ```
   Installation of INTUITY FlexWord Recognition - Base
   (flexrecog) was successful.
   ```

   ```
   Insert diskette into Floppy Drive 1.
   Type [go] when ready,
       or [q] to quit:  (default:  go)
   ```

7. Enter **q**

8. Make sure that the light on the diskette drive is off and remove the diskette. See "Inserting and Removing Diskettes" in Chapter 3, "Common System Procedures," for the procedure.

Installing FlexWord Recognition - U.S. English

To install the FlexWord Recognition - U.S. English package, do the following:

1. Stop the voice system. See "Stopping the Voice System" in Chapter 3, "Common System Procedures," for the procedure.

2. Ensure that the ASP Driver package has been installed.

3. Ensure the FlexWord Recognition - Base package has been installed.

4. At the UNIX prompt, enter **pkgadd -d diskette1**

   The system displays the following message:

   ```
   Insert diskette into Floppy Drive 1.
   Type [go] when ready,
       or [q] to quit:  (default:  go)
   ```

5. Insert the diskette labeled "FlexWord Recognition - US English 1 of 5" into the diskette drive. See "Inserting and Removing Diskettes" in Chapter 3, "Common System Procedures," for the procedure.

6. Press (ENTER).

   The system displays the following message:

```
Installation in progress -- do not remove the diskette.

The following packages are available:
  1. usflex     INTUITY FlexWord Recognition - US
                English (i486)

Select package(s) you wish to process (or 'all' to
process all packages). (default: all) [?,??,q]:
```

   NOTE:
   If you did not stop the voice system, the system displays the following message at this point:

```
The voice system is currently running and must be
stopped in order to install this package.

Is it ok to STOP the voice system ? [y/n]
```

   Enter **y**

7. Press (ENTER).

   The system displays the following message:

```
PROCESSING:
Set: INTUITY FlexWord Recognition - US English (usflex)
from <diskette1>

INTUITY FlexWord Recognition - US English
(i486)
Using </> as the package base directory.

READY TO PROCESS:
    Package: INTUITY FlexWord Recognition - US English
             (usflex) diskette 2 of 5

Insert diskette 2 of 5 into Floppy Drive 1.
Type [go] when ready,
    or [q] to quit:  (default:  go)
```

8. Remove the diskette labeled "FlexWord Recognition - US English 1 of 5" from the diskette drive. See "Inserting and Removing Diskettes" in Chapter 3, "Common System Procedures," for the procedure.

9. Insert the diskette labeled "FlexWord Recognition - US English 2 of 5" into the diskette drive. See "Inserting and Removing Diskettes" in Chapter 3, "Common System Procedures," for the procedure.

10. Press (ENTER).

    The system displays the following message:

```
READY TO PROCESS:
    Package: INTUITY FlexWord Recognition - US English
             (usflex) diskette 3 of 5

Insert diskette 3 of 5 into Floppy Drive 1.
Type [go] when ready,
    or [q] to quit:  (default:  go)
```

11. Remove the diskette labeled “FlexWord Recognition - US English 2 of 5” from the diskette drive. See “Inserting and Removing Diskettes” in Chapter 3, “Common System Procedures,” for the procedure.

12. Insert the diskette labeled “FlexWord Recognition - US English 3 of 5” into the diskette drive. See “Inserting and Removing Diskettes” in Chapter 3, “Common System Procedures,” for the procedure.

13. Press (ENTER).

    The system displays the following message:

```
READY TO PROCESS:
    Package: INTUITY FlexWord Recognition - US English
             (usflex) diskette 4 of 5

Insert diskette 4 of 5 into Floppy Drive 1.
Type [go] when ready,
    or [q] to quit:  (default:  go)
```

14. Remove the diskette labeled “FlexWord Recognition - US English 3 of 5” from the diskette drive. See “Inserting and Removing Diskettes” in Chapter 3, “Common System Procedures,” for the procedure.

15. Insert the diskette labeled “FlexWord Recognition - US English 4 of 5” into the diskette drive. See “Inserting and Removing Diskettes” in Chapter 3, “Common System Procedures,” for the procedure.

16. Press (ENTER).

    The system displays the following message:

```
READY TO PROCESS:
    Package: INTUITY FlexWord Recognition - US English
             (usflex) diskette 5 of 5

Insert diskette 5 of 5 into Floppy Drive 1.
Type [go] when ready,
    or [q] to quit:  (default:  go)
```

17. Remove the diskette labeled “FlexWord Recognition - US English 4 of 5” from the diskette drive. See “Inserting and Removing Diskettes” in Chapter 3, “Common System Procedures,” for the procedure.

18. Insert the diskette labeled “FlexWord Recognition - US English 5 of 5” into the diskette drive. See “Inserting and Removing Diskettes” in Chapter 3, “Common System Procedures,” for the procedure.

    The system displays several status messages and then the following message:

    ```
    Installation of INTUITY FlexWord Recognition - US
    English (usflex) was successful.
    ```

    ```
    Insert diskette into Floppy Drive 1.
    Type [go] when ready,
        or [q] to quit:  (default:  go)
    ```

19. Enter **q**

20. Make sure that the light on the diskette drive is off and remove the diskette. See “Inserting and Removing Diskettes” in Chapter 3, “Common System Procedures,” for the procedure.

For more information on this feature package, see *INTUITY™ CONVERSANT® Version 6.0 Speech Development, Processing, and Recognition*, 585-310-762.

Installing the FlexWord Toolkit Package

To install the FlexWord Toolkit package, do the following:

1. At the UNIX prompt, enter **pkgadd -d diskette1**

   The system displays the following message:

   ```
   Insert diskette into Floppy Drive 1.
   Type [go] when ready
     or [q] to quit: (default: go)
   ```

2. Insert the diskette labeled “FlexWord Toolkit 1 of 2” into the diskette drive. See “Inserting and Removing Diskettes” in Chapter 3, “Common System Procedures,” for the procedure.

3. Press (ENTER).

   The system displays the following message:

   ```
   The following packages are available:
     1. FlexTool   INTUITY FlexWord Toolkit
                   (i486)
   ```

   ```
   Select package(s) you wish to process (or ‘all’ to
   process all packages). (default: all) [?,??,q]:
   ```

4. Press (ENTER).

   The system displays the following message:

   ```
   PROCESSING:
   Set: INTUITY FlexWord Toolkit (FlexTool) from
   <diskette1>

   INTUITY FlexWord Toolkit
   (i486)
   Using </> as the package base directory.

   READY TO PROCESS:
       Package: INTUITY FlexWord Toolkit(FlexTool)
                diskette 2 of 2

   Insert diskette 2 of 2 into Floppy Drive 1.
   Type [go] when ready,
       or [q] to quit:  (default:  go)
   ```

5. Remove the diskette labeled “FlexWord Toolkit 1 of 2” from the diskette drive. See “Inserting and Removing Diskettes” in Chapter 3, “Common System Procedures,” for the procedure.

6. Insert the diskette labeled “FlexWord Toolkit 2 of 2” into the diskette drive. See “Inserting and Removing Diskettes” in Chapter 3, “Common System Procedures,” for the procedure.

7. Press (ENTER).

   The system displays the following message:

   ```
   Installation of the FlexWord Toolkit package was
   successful.

   Insert diskette into Floppy Drive 1.
   Type [go] when ready
     or [q] to quit: (default: go)
   ```

8. Enter **q**

9. Make sure that the light on the diskette drive is off and remove the diskette. See “Inserting and Removing Diskettes” in Chapter 3, “Common System Procedures,” for the procedure.

For more information on this feature package, see *INTUITY™ CONVERSANT® Version 6.0 Speech Development, Processing, and Recognition*, 585-310-762.

Installing the Form Filler Application

CAUTION:

Talkfiles 8 and 9 are reserved talkfile numbers for Form Filler. If you have other applications that use talkfile numbers 8 or 9, do not erase your phrases; reassign new talkfile numbers to them. To do this, back up the speech in talkfiles 8 and 9, remove the speech, then install the Form Filler package. Once the Form Filler package is installed, restore the speech you backed up so the talkfile is assigned a new number. See INTUITY™ CONVERSANT® Version 6.0 Administration, 585-310-591, for information on speech backup with the ***spsav*** *command.*

To install this optional feature package, do the following:

1. If you are not already logged in as **root**, do so now.
2. Enter **pkgadd -d diskette1**

   The system displays the following message:

   ```
   Insert diskette into Floppy Drive 1.
   Type [go] when ready,
       or [q] to quit:  (default:  go)
   ```

3. Insert the diskette labeled “Form Filler Application 1 of 2” into the diskette drive. See “Inserting and Removing Diskettes” in Chapter 3, “Common System Procedures,” for the procedure.
4. Press (ENTER).

   The system displays the following message:

   ```
   Installation in progress -- do not remove the diskette.

   The following packages are available:
     1. ff         INTUITY Form Filler Application
                   (i486)

   Select package(s) you wish to process (or ‘all’ to
   process all packages). (default: all) [?,??,q]:
   ```

5. Press (ENTER).

   The system displays the following message:

   ```
   PROCESSING:
   Set: INTUITY Form Filler Application (ff) from
   <diskette1>

   INTUITY Form Filler Application
   (i486)
   Using </> as the package base directory.
   Lucent Technologies Inc.
   ```

The system displays several status messages and then the following message:

```
READY TO PROCESS:
    Package: INTUITY Form Filler Application (ff)
             diskette 2 of 2

Insert diskette 2 of 2 into Floppy Drive 1.
Type [go] when ready,
    or [q] to quit:  (default:  go)
```

6. Remove the diskette labeled “Form Filler Application 1 of 2” from the diskette drive. See “Inserting and Removing Diskettes” in Chapter 3, “Common System Procedures,” for the procedure.

7. Insert the diskette labeled “Form Filler Application 2 of 2” into the diskette drive. See “Inserting and Removing Diskettes” in Chapter 3, “Common System Procedures,” for the procedure.

8. Press (ENTER).

   The system displays several status messages and then the following message:

   ```
   Changing Form Filler Passwords.

   Enter new transcription password:
   ```

9. Enter the new transcription password.

   The system displays the following message:

   ```
   Enter new review password:
   ```

10. Enter the new review password.

    The system displays several status messages and then the following message:

    ```
    Installation of INTUITY Form Filler Application (ff)
    was successful.

    Insert diskette into Floppy Drive 1.
    Type [go] when ready,
        or [q] to quit:  (default:  go)
    ```

11. Enter **q**

12. Remove the diskette labeled “Form Filler Application 2 of 2” from the diskette drive. See “Inserting and Removing Diskettes” in Chapter 3, “Common System Procedures,” for the procedure.

To begin using the Form Filler feature as well as the FFtemplate, see Chapter 8, “Using Optional Features,” of *INTUITY™ CONVERSANT® Version 6.0 Application Development with Script Builder*, 585-310-760.

Installing the Graphical Speech Editor Package

To install this optional feature package, do the following:

1. If you are not already logged in as **root**, do so now.
2. Enter **pkgadd -d diskette1**

   The system displays the following message:

   ```
   Insert diskette into Floppy Drive 1.
   Type [go] when ready,
       or [q] to quit:  (default:  go)
   ```

3. Insert the diskette labeled “Graphical Speech Editor Package 1 of 1” into the diskette drive. See “Inserting and Removing Diskettes” in Chapter 3, “Common System Procedures,” for the procedure.
4. Press (ENTER).

   The system displays the following message:

   ```
   Installation in progress -- do not remove the diskette.
   ```

   ```
   The following packages are available:
     1. gse        INTUITY Graphical Speech Editor
                   (i486)
   ```

   ```
   Select package(s) you wish to process (or ‘all’ to
   process all packages). (default: all) [?,??,q]:
   ```

5. Press (ENTER).

   The system displays the following message:

   ```
   PROCESSING:
   Set: INTUITY Graphical Speech Editor (gse) from
   <diskette1>
   ```

   ```
   INTUITY Graphical Speech Editor
   (i486)
   Using </> as the package base directory.
   Lucent Technologies Inc.
   ```

   The system displays several status messages and then the following message:

   ```
   Installation of INTUITY Graphical Speech Editor (gse)
   was successful.
   ```

   ```
   Insert diskette into Floppy Drive 1.
   Type [go] when ready,
       or [q] to quit:  (default:  go)
   ```

6. Enter **q**
7. Remove the diskette labeled "Graphical Speech Editor Package 1 of 1" from the diskette drive. See "Inserting and Removing Diskettes" in Chapter 3, "Common System Procedures," for the procedure.

Installing the Intelligent Ports Card Package

Ensure that the hardware has been installed before proceeding.

To install the Intelligent Ports Card Driver package, do the following:

1. At the UNIX prompt, enter **pkgadd -d diskette1**

   The system displays the following message:

   ```
   Insert diskette into Floppy Drive 1.
   Type [go] when ready
     or [q] to quit: (default: go)
   ```

2. Insert the diskette labeled "Intelligent Ports Card 1 of 1" into the diskette drive. See "Inserting and Removing Diskettes" in Chapter 3, "Common System Procedures," for the procedure.
3. Press (ENTER).

   The system displays the following message:

   ```
   Installation in progress -- do not remove the diskette.
   ```

   ```
   The following packages are available:
     1. gemini     INTUITY Intelligent Ports Card
                   (i486)
   ```

   ```
   Select package(s) you wish to process (or 'all' to
   process all packages). (default: all) [?,??,q]:
   ```

4. Press (ENTER).

   The system displays the following message:

   ```
   PROCESSING:
   Set: INTUITY Intelligent Ports Card (gemini) from
   <diskette1>
   ```

   ```
   INTUITY Intelligent Ports Card
   (i486)
   Using </> as the package base directory.
   Lucent Technologies Inc.
   ```

   ```
   What type of system are you using?
   (1 - 386, 2 - 486, 3 - Pentium, Q to Quit)
   ```

5. Enter the appropriate number.

   The system displays the following message:

   ```
   The current system configuration will allow for up to 3
   Gemini-10/1000 controller boards to be installed.  How
   many Gemini-10/1000 controller boards will you be
   installing?
   (1-3,Q to quit)
   ```

6. Enter the appropriate number.

   The system displays the following message:

   ```
   Please enter the ports card type for Board 1:
   The valid ports card types are:

           GEMINI-1000 (default)
           GEMINI-10

   Type the ports card type and strike the ENTER key or
   type Q to cancel installation.  Striking the ENTER
   alone will select the default.
   ```

7. Enter the appropriate card type.

   The system displays the following message:

   ```
   Please enter the following system configuration
   information for GEMINI-X Board 1:
   The available interrupts(s) for the GEMINI-X Board 1
   are:

           IRQ X (default)
           IRQ X
           IRQ X

   Type the interrupt number and strike the ENTER key or
   type Q to cancel installation.  Striking the ENTER
   alone will select the default.
   ```

8. Enter the appropriate IRQ.

   The IRQ is determined by the INTUITY CONVERSANT Hardware Resource Allocator. See "Hardware Resource Allocator Operation" in Appendix A, "System Configuration".

   The system displays the following message:

   ```
   Please enter the following system configuration
   information for GEMINI-X Board 1:
   The available starting I/O addresses for the GEMINI-X
   Board 1 are:

           Starting I/O address: XXX (default)
           Starting I/O address: XXX
           Starting I/O address: XXX
           Starting I/O address: XXX
   ```

```
        Starting I/O address: XXX
        Starting I/O address: XXX
        Starting I/O address: XXX
        Starting I/O address: XXX
        Starting I/O address: XXX
        Starting I/O address: XXX

Type the starting I/O address and strike the ENTER key
or type Q to cancel installation.  Striking the ENTER
alone will select the default.
```

9. Enter the appropriate starting I/O address. The starting I/O address is determined by the INTUITY CONVERSANT Hardware Resource Allocator. See "Hardware Resource Allocator Operation" in Appendix A, "System Configuration".

   The system displays the following message:

```
Please enter the following system configuration
information for GEMINI-X Board 1. The available
starting controller memory addresses for the GEMINI-X
Board 1 are:

    CA000 (default)     CC000           CE000
    D4000               D6000           DC000
    DE000               E0000           E2000
    E4000               E6000           E8000
    EA000               EC000           EE000

Type the starting controller memory address and strike
the ENTER key or type Q to cancel installation.
Striking the ENTER alone will select the default.
```

10. Enter the appropriate starting controller memory address. The starting controller memory address is determined by the INTUITY CONVERSANT Hardware Resource Allocator. See "Hardware Resource Allocator Operation" in Appendix A, "System Configuration".

    The system displays the following message:

```
*****************************************************
Board 1 configuration:
        Ports Card Type = GEMINI-X
        Interrupt number = X
        I/O ports Starting address = XXX
        Controller Memory Starting address = XXXXX
*****************************************************

Is this configuration acceptable? (y or n)
```

11. Enter **y**

    The system displays the following message:

    ```
    The UNIX Operating System kernel will be rebuilt
    to include your configuration changes during the
    next system reboot.
    ```

    ```
    Installation of INTUITY Intelligent Ports Card (gemini)
    was successful.
    ```

    ```
    Insert diskette into Floppy Drive 1.
    Type [go] when ready,
        or [q] to quit:  (default:  go)
    ```

12. Enter **q**

13. Remove the diskette labeled “Intelligent Ports Card 1 of 1” from the diskette drive. See “Inserting and Removing Diskettes” in Chapter 3, “Common System Procedures,” for the procedure.

14. Reboot the system. See “Rebooting the UNIX System” in Chapter 3, “Common System Procedures,” for the procedure.

See *INTUITY™ CONVERSANT® Version 6.0 Administration*, 585-310-591, for information on port set up for modems and terminals and printers.

Installing the LAN Adapter Setup Program

To install this optional feature package, do the following:

1. If you are not already logged in as **root**, do so now.

2. Enter **pkgadd -d diskette1**

   The system displays the following message:

   ```
   Insert diskette into Floppy Drive 1.
   Type [go] when ready,
       or [q] to quit:  (default:  go)
   ```

3. Insert the diskette labeled “SMC LAN Adapter Setup Program 1 of 1” into the diskette drive. See “Inserting and Removing Diskettes” in Chapter 3, “Common System Procedures,” for the procedure.

4. Press (ENTER).

   The system displays the following message:

```
Installation in progress -- do not remove the diskette.

The following packages are available:
  1. ezsetup    SMC LAN Adapter Setup program
                (i486)

Select package(s) you wish to process (or 'all' to
process all packages). (default: all) [?,??,q]:
```

5. Press (ENTER).

   The system displays the following message:

```
PROCESSING:
Set: SMC LAN Adapter Setup program (ezsetup) from
<diskette1>

SMC LAN Adapter Setup program
(i386)
Using </var/spool/pkg> as the package base directory.
Lucent Technologies Inc.
```

   The system displays several status messages and then the following message:

```
Installation of SMC LAN Adapter Setup program (ezsetup)
was successful.

Insert diskette into Floppy Drive 1.
Type [go] when ready,
    or [q] to quit:  (default:  go)
```

6. Enter **q**

7. Remove the diskette labeled "SMC LAN Adapter Setup Program 1 of 1" from the diskette drive. See "Inserting and Removing Diskettes" in Chapter 3, "Common System Procedures," for the procedure.

Installing the LINKix Packages

The following packages *must* be installed before installing any of the LINKix packages:

- UnixWare 1.1 operating system
- INTUITY CONVERSANT VIS V6.0 set
- Token Ring Hardware Support (if you have a Token Ring card)

Use the following procedure to install the LINKix software:

1. If you are not already logged in as **root**, do so now.
2. Insert the cartridge tape labeled "CLEO LINXix 3.0 1 of 1" into the cartridge tape drive. See "Inserting and Removing Diskettes" in Chapter 3, "Common System Procedures," for the procedure.
3. Enter **pkgadd -d ctape1**

   The system displays the following message:

   ```
   Insert a cartridge into Tape Drive 1.
   Type [go] when ready,
           or [q] to quit:  (default:  go)
   ```

4. Press (ENTER).

   The system displays the following message:

   ```
   Installation in progress.  Do not remove the cartridge.

   The following packages are available:

   1  coproc       linkix_coproc, Link Level (3.0.2.1)
                   (386) 3.0.2.1
   2  coproc04     linkix_coproc, Link Level, Supplement
                   04
                   (386) 3.0.2.1
   3  l3270s03     linkix_3270,Feature Level 1,Supplement
                   03
                   (386) 3.0.2.3
   4  linkht02     linkix_hte, Feature Level 2 Supplement
                   02
                   (386) 3.0.2.7
   5  linkix3270   linkix_3270, Feature Level 1 (3.0.2.3)
                   (386) 3.0.2.3
   6  linkxHTE     linkix_hte, Feature Level 2 (3.0.2.7)
                   (386) 3.0.2.7
   7  mgmt         linkix_mgmt, Feature Level 1 (3.0.2.3)
                   (386) 3.0.2.0
   8  netman       linkix_netman, Feature Level 1 (3.0.2.0)
                   (386) 3.0.2.0
   9  sib          linix_sib, Link Level (3.0.2.1)
                   (386) 3.0.2.1
   ...3 more package to follow;
   <RETURN> for more choices, <CTRL-D> to stop display:
   ```

5. Press (ENTER).

   The system displays the following message:

   ```
   10  sib02       linkix_sib, Link Level, Supplement 02
                   (386) 3.0.2.1
   ```

```
11 sna01        linkix_sna, SNA Level, Supplement 01
                (386) 3.0.3.0
12 sna128lu     linkix_sna_128lu, Link Level, (3.0.3.0)
                (386) 3.0.3.0
13 tkrn         linkix_tkrn, Link Level, (3.0.2.5)
                (386) 3.0.2.5

Select package(s) you wish to process (or 'all' to
process all packages).  (default: all) [?, ??, q]
```

Use the following rules to guide your package selections:

- Install *all* the packages (based on the remaining rules in this list) at this time. Do not choose some packages now and then go back later to install more packages. Make *all* your package selections for installation now.
- If you have the FIFO/SIB synchronous interface card, you must choose packages 9 and 10 from the menu.
- If you have the PC/XL synchronous interface card, you must choose packages 1 and 2 from the menu.
- If you have the Token Ring card, you must choose package 13 from the menu.
- Select packages 3, 4, 5, 6, 7, 8, 11, and 12 in every installation case.

CAUTION:
Only one type of SDLC Link Level package can be installed; either sib (packages 8 and 9) or coproc (packages 1 and 2). Do NOT install both types on your system.

6. Using the rules above, select the packages by entering the package number, press the space bar, enter another package number, press the space bar, etc. until all package selections are complete, then press [ENTER].

   Example: You have FIFO/SIB and Token Ring cards, and are installing all the other LINKix packages; use the following key sequence:

   Press [3] [SPACE] [4] [SPACE] [5] [SPACE] [6] [SPACE] ... repeating the number and a space until you enter package 11 (all but packages 1 and 2), then press [ENTER].

   Once you press [ENTER], the installation begins; the order is predetermined by the system.

Installing Package 1 (linkix_coproc)

The system displays the following message:

```
PROCESSING:
Set: Link Level (3.0.2.1) from <diskette1>

                    RESTRICTED RIGHTS

Use, duplication or disclosure by Government is subject
to restrictions as set forth in subparagraph (C)(1)(ii)
of the Rights in Technical Data and Computer Software
clause at DFARS 52.227-7013. CLEO Communications.

                     LIMITED RIGHTS

Contract No: XXXXXXXX
Contractor: CLEO Communications
Limited rights shall be effective indefinitely and are
not subject to expiration as set forth in paragraph (3)
of the Rights in Technical Data and Computer Software
clause at DFARS 52.227-7013.

Do you wish to continue? (y/n)
```

1. Enter **y**

   The system displays several status messages and then the following message:

   ```
   Checking for streams ... Done

   linkix_coproc, Link Level (3.0.2.1) install will add
   drivers to the kernel and build a new kernel. Do you
   wish to continue or terminate the installation? (c/t)
   ```

2. Enter **c**

   The system displays the following message:

   ```
   Adding driver configurations to the kernel.
   All previous configurations will be deleted.
   Please wait...

   Possible board type selections for the Link Level
   Driver are:

        1) CLEO FIFO/SIB
        2) CLEO PC/SIB
        3) CLEO PC/XL
        4) CLEO EMX286I4
        5) CLEO EMX286MC4  (Microchannel board)

        q) Quit

   Please enter board type selection:
   ```

3. Enter the appropriate circuit card type for your system.

   The system displays the following message:

```
The installation will now set up an IRQ for your board:

The XXX Board supports the following IRQs:

        IRQ     DRIVER
      1) 3      asyc
      2) 4      asyc
      3) 5      -AVAILABLE-
      4) 9      ipci

      q) quit

Please enter an -AVAILABLE- IRQ selection, <CR> for
default of IRQ 5.
```

   NOTE:
   The above message is dependent on your system configuration and may look different than the one shown.

4. Enter the appropriate IRQ.

   The IRQ is determined by the INTUITY CONVERSANT Hardware Resource Allocator. See "Hardware Resource Allocator Operation" in Appendix A, "System Configuration".

   The system displays the following message:

```
The installation will now set up the IO address for your
board:

The XXX Board supports the following IOs:

    IO                        Driver
1) 0x200 (default)            -AVAILABLE-
2) 0x2A0                      -AVAILABLE-
3) 0x2B0                      -AVAILABLE-
4) 0x2E0                      -AVAILABLE-
5) 0x3A0                      -AVAILABLE-
6) 0x3B0                      -AVAILABLE-
7) 0x3E0                      -AVAILABLE-

q) quit

Please enter IO selection, <CR> for default of IO
0x200.
```

   NOTE:
   The above message is dependent on your system configuration and may look different than the one shown.

5. Enter the appropriate IO.

   The IO is determined by the INTUITY CONVERSANT Hardware Resource Allocator. See "Hardware Resource Allocator Operation" in Appendix A, "System Configuration".

   The system displays the following message:

```
The installation will now set up the Shared Memory
address for your board:

The XXX Board supports the following Shared Memory
addresses:

    IO       Driver                IO       Driver
1) 0xA0000   kd               9) 0xC0000   kd
2) 0xA4000   kd              10) 0xC4000   kd
3) 0xA8000   kd              11) 0xC8000   adsc
4) 0xAC000   kd              12) 0xCC000   -AVAILABLE-
5) 0xB0000   kd              13) 0xD0000   ipci
6) 0xB4000   kd              14) 0xD4000   -AVAILABLE-
7) 0xB8000   kd              15) 0xD8000   sme0
8) 0xBC000   kd              16) 0xDC000   -AVAILABLE-

q) quit

Please enter selection, <CR> for default of 0xD0000:
```

   NOTE:
   The above message is dependent on your system configuration and may look different than the one shown.

6. Enter the appropriate shared memory address.

   The shared memory address is determined by the INTUITY CONVERSANT Hardware Resource Allocator. See "Hardware Resource Allocator Operation" in Appendix A, "System Configuration".

   The system displays the following message:

```
The IRQ, IO and Shared Memory Address selections have
been to the kernel configuration.

     You can use the "LINKix.cfg" utility should you
     nee to change the IRQ Number, the I/O Start
     Address or the Shared Memory Address settings
     after the installation.

Press <return> to continue:
```

7. Press (ENTER).

   The system displays the following message:

```
The kernel has to be linked at a later time to activate
the linkix_coproc, Link Level (3.0.2.1) installation.
```

```
The kernel will be automatically linked with the
complete installation of one of the following LINKix
SNA Level packages:

     linkix_sna_321u
     linkix_sna_641u
     linkix_sna_1281u
     linkix_sna_2541u

Enter <CR> to continue
```

8. Press (ENTER).

Installing Package 2 (linkix_coproc Supplement)

The system displays the following message:

```
                    RESTRICTED RIGHTS

Use, duplication or disclosure by Government is subject
to restrictions as set forth in subparagraph (C)(1)(ii)
of the Rights in Technical Data and Computer Software
clause at DFARS 52.227-7013. CLEO Communications.

                      LIMITED RIGHTS

Contract No: XXXXXXXX
Contractor: CLEO Communications
Limited rights shall be effective indefinitely and are
not subject to expiration as set forth in paragraph (3)
of the Rights in Technical Data and Computer Software
clause at DFARS 52.227-7013.

Do you wish to continue? (y/n)
```

1. Enter **y**

   The system displays the following message:

   ```
   Press Enter to continue.
   ```

2. Press (ENTER).

Installing Package 3 (linkix_3270 Supplement)

The system displays the following message:

```
                    RESTRICTED RIGHTS

Use, duplication or disclosure by Government is subject
to restrictions as set forth in subparagraph (C)(1)(ii)
of the Rights in Technical Data and Computer Software
clause at DFARS 52.227-7013. CLEO Communications.

                      LIMITED RIGHTS

Contract No: XXXXXXXX
Contractor: CLEO Communications
Limited rights shall be effective indefinitely and are
not subject to expiration as set forth in paragraph (3)
of the Rights in Technical Data and Computer Software
clause at DFARS 52.227-7013.

Do you wish to continue? (y/n)
```

1. Enter **y**

   The system displays the following message:

   ```
   Press Enter to continue.
   ```

2. Press (ENTER).

Installing Package 4 (linkix_hte Supplement)

The system displays the following message:

```
                    RESTRICTED RIGHTS

Use, duplication or disclosure by Government is subject
to restrictions as set forth in subparagraph (C)(1)(ii)
of the Rights in Technical Data and Computer Software
clause at DFARS 52.227-7013. CLEO Communications.

                      LIMITED RIGHTS

Contract No: XXXXXXXX
Contractor: CLEO Communications
Limited rights shall be effective indefinitely and are
not subject to expiration as set forth in paragraph (3)
of the Rights in Technical Data and Computer Software
clause at DFARS 52.227-7013.

Do you wish to continue? (y/n)
```

1. Enter **y**

   The system displays the following message:

   ```
   Press Enter to continue.
   ```

2. Press (ENTER).

Installing Package 5 (linkix_3270)

The system displays the following message:

```
                    RESTRICTED RIGHTS

Use, duplication or disclosure by Government is subject
to restrictions as set forth in subparagraph (C)(1)(ii)
of the Rights in Technical Data and Computer Software
clause at DFARS 52.227-7013. CLEO Communications.

                     LIMITED RIGHTS

Contract No: XXXXXXXX
Contractor: CLEO Communications
Limited rights shall be effective indefinitely and are
not subject to expiration as set forth in paragraph (3)
of the Rights in Technical Data and Computer Software
clause at DFARS 52.227-7013.

Do you wish to continue? (y/n)
```

1. Enter **y**

Installing Package 6 (linkix_hte)

The system displays the following message:

```
                    RESTRICTED RIGHTS

Use, duplication or disclosure by Government is subject
to restrictions as set forth in subparagraph (C)(1)(ii)
of the Rights in Technical Data and Computer Software
clause at DFARS 52.227-7013. CLEO Communications.

                     LIMITED RIGHTS

Contract No: XXXXXXXX
Contractor: CLEO Communications
Limited rights shall be effective indefinitely and are
not subject to expiration as set forth in paragraph (3)
of the Rights in Technical Data and Computer Software
clause at DFARS 52.227-7013.

Do you wish to continue? (y/n)
```

1. Enter **y**

Installing Package 7 (linkix_mgmt)

The system displays the following message:

```
                    RESTRICTED RIGHTS

Use, duplication or disclosure by Government is subject
to restrictions as set forth in subparagraph (C)(1)(ii)
of the Rights in Technical Data and Computer Software
clause at DFARS 52.227-7013. CLEO Communications.

                      LIMITED RIGHTS

Contract No: XXXXXXXX
Contractor: CLEO Communications
Limited rights shall be effective indefinitely and are
not subject to expiration as set forth in paragraph (3)
of the Rights in Technical Data and Computer Software
clause at DFARS 52.227-7013.

Do you wish to continue? (y/n)
```

1. Enter **y**

Installing Package 8 (linkix_netman)

The system displays the following message:

```
                    RESTRICTED RIGHTS

Use, duplication or disclosure by Government is subject
to restrictions as set forth in subparagraph (C)(1)(ii)
of the Rights in Technical Data and Computer Software
clause at DFARS 52.227-7013. CLEO Communications.

                      LIMITED RIGHTS

Contract No: XXXXXXXX
Contractor: CLEO Communications
Limited rights shall be effective indefinitely and are
not subject to expiration as set forth in paragraph (3)
of the Rights in Technical Data and Computer Software
clause at DFARS 52.227-7013.

Do you wish to continue? (y/n)
```

1. Enter **y**

Installing Package 9 (linkix_sib)

The system displays the following message:

```
                    RESTRICTED RIGHTS

Use, duplication or disclosure by Government is subject
to restrictions as set forth in subparagraph (C)(1)(ii)
of the Rights in Technical Data and Computer Software
clause at DFARS 52.227-7013. CLEO Communications.

                      LIMITED RIGHTS

Contract No: XXXXXXXX
Contractor: CLEO Communications
Limited rights shall be effective indefinitely and are
not subject to expiration as set forth in paragraph (3)
of the Rights in Technical Data and Computer Software
clause at DFARS 52.227-7013.

Do you wish to continue? (y/n)
```

1. Enter **y**

   ```
   Press Enter to continue:
   ```

2. Press (ENTER).

Installing Package 10 (linkix_sib Supplement)

The system displays the following message:

```
                    RESTRICTED RIGHTS

Use, duplication or disclosure by Government is subject
to restrictions as set forth in subparagraph (C)(1)(ii)
of the Rights in Technical Data and Computer Software
clause at DFARS 52.227-7013. CLEO Communications.

                      LIMITED RIGHTS

Contract No: XXXXXXXX
Contractor: CLEO Communications
Limited rights shall be effective indefinitely and are
not subject to expiration as set forth in paragraph (3)
of the Rights in Technical Data and Computer Software
clause at DFARS 52.227-7013.

Do you wish to continue? (y/n)
```

1. Enter **y**

   The system displays the following message:

   ```
   Press Enter to continue.
   ```

2. Press (ENTER).

Installing Package 11 (linkix_sna Supplement)

The system displays the following message:

```
linkix_sna, SNA Level Supplement 01 install will add
drivers to the kernel and build a new kernel.  Do you
wish to continue or terminate the installation? (c/t)
```

1. Enter **c**

   The system displays the following message:

   ```
   Adding driver configurations to the kernel.
   All previous configurations will be deleted.
   Please wait...
   ```

   ```
   The UNIX Operating System kernel will be rebuilt
   now.  This will take some time. Please wait.
   ```

   ```
   The UNIX Operating System kernel has been rebuilt
   ```

Installing Package 12 (linkix_sna)

The system displays several status messages and then the following message:

```
                    RESTRICTED RIGHTS

Use, duplication or disclosure by Government is subject
to restrictions as set forth in subparagraph (C)(1)(ii)
of the Rights in Technical Data and Computer Software
clause at DFARS 52.227-7013. CLEO Communications.

                      LIMITED RIGHTS

Contract No: XXXXXXXX
Contractor: CLEO Communications
Limited rights shall be effective indefinitely and are
not subject to expiration as set forth in paragraph (3)
of the Rights in Technical Data and Computer Software
clause at DFARS 52.227-7013.

Do you wish to continue? (y/n)
```

2. Enter **y**

   The system displays several status messages and then the following message:

   ```
   linkix_sna_1281u, SNA Level (3.0.3.0) install will add
   drivers to the kernel and build a new kernel.  Do you
   wish to continue or terminate the installation? (c/t)
   ```

3. Enter **c**

   The system displays several status messages and then the following message:

```
Adding driver configurations to the kernel.
All previous configurations will be deleted.
Please wait...

linkix_sna_1281u, SNA Level (3.0.3.0) installation
detected the following SDLC Frame Size:

-------------------------------------------------------

                  265  (265 + 9) bytes

-------------------------------------------------------

Do you want to change the SDLC Frame Size? (y/n)
```

4. Enter **n**

   The system displays the following message:

```
     You can use the "LINKix.cfg" utility should you
     need to change the SDLC Frame Size after the
     installation.

Enter <CR> to continue:
```

5. Press (ENTER).

   The system displays several status messages and then the following message:

```
     The UNIX Operating System kernel will be rebuilt
     now.  This will take some time. Please wait.
```

Completing the Installation

When all of the chosen packages have been installed the system displays the following message:

```
The operating kernel has been successfully linked. To
activate it, you must reboot your system.

Installation of linkix_sna, SNA Level, Supplement 01
(sna01) was successful

Insert a cartridge into Tape Drive 1.
Type [go] when ready,
    or [q] to quit:  (default:  go)
```

1. Enter **q**
2. Remove the cartridge tape from the cartridge tape drive. See "Inserting and Removing Cartridge Tapes" in Chapter 3, "Common System Procedures," for the procedure.

3. Reboot the system. See "Rebooting the UNIX System" in Chapter 3, "Common System Procedures," for the procedure.

NOTE:
If you should want to change IRQ, I/O Address, RAM Address, and/or SDLC frame size after installing the LINKix software, see **LINKix.cfg** in the procedure titled "Changing Hardware Configuration using LINXix.cfg" in Chapter 3, "Software installation," of the *CLEO LINKix Administration Guide*.

You have completed the installation of the LINKix packages. To finish the installation of the host software, go to the next section, "Installing the Host Packages."

Installing the Host Packages

When installing the INTUITY CONVERSANT Host software, the order in which you install the packages is very important.

NOTE:
The INTUITY CONVERSANT VIS V6.0 set and the LINXix packages *must* be installed before any of the Host packages. If the appropriate hardware (FIFO/SIB or PC/XL and/or Token Ring card) is not installed at this time, you may get an error message similar to the following when you stop and start the voice system:

```
linkix.hwi  open of /dev/cll failed with error=2.
```

Make sure you install the Host software in this order:

1. Install the Synchronous Host Interface package.
2. Install the 3270 Enhanced File Transfer package.
3. Install the 3270 NetView Alarm Interface package.

Installing the Synchronous Host Interface Package

Use the following procedure to install this optional feature package:

1. If you are not already logged in as **root**, do so now.
2. Stop the voice system. See "Stopping the Voice System" in Chapter 3, "Common System Procedures," for the procedure.
3. Insert the diskette labeled "Synchronous Host Interface Package 1 of 1" into the diskette drive. See "Inserting and Removing Diskettes" in Chapter 3, "Common System Procedures," for the procedure.

4. Enter **pkgadd -d diskette1**

   The system displays the following message:

```
Insert diskette into Floppy Drive 1.
Type [go] when ready,
    or [q] to quit:  (default:  go)
```

5. Press (ENTER).

   The system displays the following message:

```
Installation in progress -- do not remove the diskette.

The following packages are available:
  1. synchost   INTUITY Synchronous Host Interface
                Package (i486)

Select package(s) you wish to process (or 'all' to
process all packages). (default: all) [?,??,q]:
```

6. Press (ENTER).

   The system displays the following message:

```
PROCESSING:
Set: INTUITY Synchronous Host Interface Package
(synchost) from <diskette1>

INTUITY Synchronous Host Interface Package
(i486)
Using </> as the package base directory.
Lucent Technologies Inc.
```

   The system displays several status messages and then the following message:

```
Installation of Synchronous Host Interface Package
(synchost) was successful.

Insert diskette into Floppy Drive 1.
Type [go] when ready,
    or [q] to quit:  (default:  go)
```

7. Enter **q**

8. Make sure that the light on the floppy disk drive is off and remove the diskette. See "Inserting and Removing Diskettes" in Chapter 3, "Common System Procedures," for the procedure.

Installing the 3270 Enhanced File Transfer Package

To install this optional feature package, do the following:

1. If you are not already logged in as **root**, do so now.

2. Enter **pkgadd -d diskette1**

   The system displays the following message:

```
Insert diskette into Floppy Drive 1.
Type [go] when ready,
    or [q] to quit:  (default:  go)
```

3. Insert the diskette labeled “3270 Enhanced File Transfer 1 of 1” into the diskette drive. See “Inserting and Removing Diskettes” in Chapter 3, “Common System Procedures,” for the procedure.

4. Press (ENTER).

   The system displays the following message:

```
Installation in progress -- do not remove the diskette.

The following packages are available:
  1. fts        INTUITY 3270 Enhanced File Transfer
                Package (i486)

Select package(s) you wish to process (or ‘all’ to
process all packages). (default: all) [?,??,q]:
```

5. Press (ENTER).

   The system displays the following message:

```
PROCESSING:
Set: INTUITY 3270 Enhanced File Transfer Package (fts)
from <diskette1>

INTUITY 3270 Enhanced File Transfer Package
(i486)
Using </> as the package base directory.
Lucent Technologies Inc.
```

   The system displays several status messages and then the following message:

```
Installation of INTUITY 3270 Enhanced File Transfer
Package (fts) was successful.

Insert diskette into Floppy Drive 1.
Type [go] when ready,
    or [q] to quit:  (default:  go)
```

6. Enter **q**

7. Remove the diskette labeled “3270 Enhanced File Transfer 1 of 1” from the diskette drive. See “Inserting and Removing Diskettes” in Chapter 3, “Common System Procedures,” for the procedure.

Installing the NetView Alarm Interface Package

To install this optional feature package, do the following:

1. If you are not already logged in as **root**, do so now.
2. Enter **pkgadd -d diskette1**

   The system displays the following message:

   ```
   Insert diskette into Floppy Drive 1.
   Type [go] when ready,
       or [q] to quit:  (default:  go)
   ```

3. Insert the diskette labeled “3270 Netview Alarm Interface 1 of 1” into the diskette drive. See “Inserting and Removing Diskettes” in Chapter 3, “Common System Procedures,” for the procedure.
4. Press (ENTER).

   The system displays the following message:

   ```
   Installation in progress -- do not remove the diskette.

   The following packages are available:
     1. mtcxmtr    INTUITY 3270 Netview Alarm Interface
                   Package (i486)

   Select package(s) you wish to process (or ‘all’ to
   process all packages). (default: all) [?,??,q]:
   ```

5. Press (ENTER).

   The system displays the following message:

   ```
   PROCESSING:
   Set: INTUITY 3270 Netview Alarm Interface Package
   (mtcxmtr) from <diskette1>

   INTUITY 3270 Netview Alarm Interface Package
   (i486)
   Using </> as the package base directory.
   Lucent Technologies Inc.
   ```

   The system displays several status messages and then the following message:

   ```
   Installation of INTUITY 3270 Netview Alarm Interface
   Package (mtcxmtr) was successful.

   Insert diskette into Floppy Drive 1.
   Type [go] when ready,
       or [q] to quit:  (default:  go)
   ```

6. Enter **q**

7. Remove the diskette labeled “3270 Netview Alarm Interface 1 of 1” from the diskette drive. See “Inserting and Removing Diskettes” in Chapter 3, “Common System Procedures,” for the procedure.

Once all the host software (LINKix and Host package) are installed, for more information about using the features, see *INTUITY™ CONVERSANT® Version 6.0 Communications Development*, 585-310-763.

Installing the ORACLE Development Packages

ORACLE provides many packages that are not required to support the INTUITY CONVERSANT system operation. INTUITY CONVERSANT system refers to these packages as *ORACLE add-on* packages.

This section describes the installation procedures for each add-on package. For detailed installation and removal information, see the *ORACLE7 for Intel UNIX SVR4 (iABI) Installation & Configuration Guide*.

The ORACLE add-on packages include the following:

- Pro*C 1.5.6.2.1
- SQL*FORMS 3.0.16.12.3
- SQL*Menu 5.0.11.13.3
- SQL*ReportWriter 1.1.14.7.2

CAUTION:
The ORACLE Development tools cartridge tape contains more ORACLE products than those listed. However, INTUITY CONVERSANT system customers must NOT install products that are not listed. Some of the products are already included in the various INTUITY CONVERSANT system packages, while other products are not authorized to be used by the INTUITY CONVERSANT system customers. A violation of the recommendation may result into the corruption of the INTUITY CONVERSANT system software configuration and may be illegal usage of the ORACLE software.

Installation Requirements

The basic requirements for installing ORACLE add-on packages are as follows:

- INTUITY CONVERSANT Base ORACLE RDBMS 7.0.12 package is installed.
- INTUITY CONVERSANT V6.0 Extended ORACLE DBMS 7.0.12 package is installed.

- The state of the voice system and ORACLE database is up during the installation. (You can start the database by entering **ior w**)

NOTE:
Extended ORACLE is the name created by INTUITY CONVERSANT to capture those packages that are not included with *Base ORACLE*. The term Extended ORACLE is *not* found in any of the ORACLE documentation.

Installing the ORACLE Add-on Packages

To install the ORACLE add-on packages, do the following:

1. At system prompt #, enter **cd /oracle/orainst**
2. Enter **./orainst**

   The system displays the following message:

   `Enter the pathname for your ORACLE_HOME`
3. Press (ENTER).

   The system displays the following message:

   `Enter the Installation Log File name`
4. Press (ENTER).

   The system displays the following message:

   `Enter the name of the ORACLE owner`
5. Press (ENTER).

   The system displays the following message:

   `Select the desired Installer action`
6. Use (TAB) to move through the selections. Select `Install/Upgrade/Patch Software Only`.

   The system displays the following message:

   ```
   Select one of the following:
   ...
   D: Install Directly from Tape
   ```
7. Press (ENTER).

   The system displays the following message:

   `Select the native language to be installed:`
8. Select `American/English`.

   The system displays the following message:

   `Would you like to relink Oracle product executables:`

9. Select `yes`.

   The system displays the following message:

   ```
   The /oracle/orainst/root.sh file already exists.
   Select (Yes) if you wish to append additional
   root-related action to this file.  Select (No) if you
   wish to create a new root.sh.
   ```

10. Press (ENTER).

    The system displays the following message:

    ```
    The installation log will be written to
    /oracle/orainst/install.log.
    ```

11. Press (ENTER).

    The system displays the following message:

    ```
    Enter the non-rewinding device name:
    ```

12. Enter **/dev/rmt/c0s0n**

    The system displays the following message:

    ```
    Enter the rewinding device name:
    ```

13. Enter **/dev/rmt/c0s0**

    The system displays the following message:

    ```
    Insert tape number 1.
    ```

14. Insert the cartridge tape labeled "ORACLE 7.0.12 Development Tools" into the tape drive. See "Inserting and Removing Cartridge Tapes" in Chapter 3, "Common System Procedures," for the procedure.

15. Press (ENTER).

    The system displays the following message:

    ```
    The currently running Installer (version 3.0.9.0.2)
    differs from the expected version (3.0.9.0.1).  Select
    (Yes) to continue the installation.  Select (No) to
    cancel the installation.
    ```

16. Press (TAB) to move the cursor. Select `Yes`.

    The system displays the following message:

    ```
    Working ...
    ```

    The system is reading the tape at this time. After several minutes, the system displays the following message:

    ```
    Products available on /oracle/stage
    ```

17. Select each package:

    a. Use the arrow keys to move the cursor to `package_name`.

    b. Press (ENTER).

    Repeat Steps a and b for each of the following ORACLE add-on packages.

    - Pro*C 1.5.6.2.1
    - SQL*Forms 3.0.16.12.3
    - SQL*Menu 5.0.11.13.3
    - SQL*ReportWriter 1.1.14.7.2

18. Press (TAB) to move the cursor. Select `(Install...)`.

    CAUTION:
    Do not select other items. If you do, you may corrupt the V6.0 environment setup.

    The system displays the following message:

    ```
    Working...
    ```

    ```
    Please select one of the following as a default
    terminal type for SQL*Reportwriter:
    ```

    ```
    srw_at386 - AT&T or ISC AT386 console
    ```

19. Select the appropriate terminal type from which you are going to run SQL*ReportWriter. Use the default value if you plan to run SQL*ReportWriter from an AT386 terminal.

    The system displays the following message:

    ```
    Would you like to link the SQL*ReportWriter demo user
    exits:
    ```

20. Press (ENTER).

    The system displays the following message:

    ```
    Would you like to re-link SQL*Forms 3.0 with PL/SQL?
    ```

21. Press (ENTER).

    The system displays the following message:

    ```
    Would you like to relink SQL*Plus with SQL*Forms 3.0?
    ```

22. Press (ENTER).

    The system displays the following message:

    ```
    Would you like to relink SQL*Forms 3.0 with SQL*Menu
    5.0?
    ```

23. Press (ENTER).

    The system displays the following message:

    ```
    Working...
    ```

    ```
    Completed loading ORACLE software into the staging area
    (/oracle/stage).  Select (OK) to continue.
    ```

24. Press (ENTER).

    The system displays the following message:

    ```
    Working...
    ```

    ```
    The requested action has been performed for selected
    products.  You should examine the installation log for
    possible errors.
    ```

    ```
    Select (Help) for more details on what you can do next.
    Select (OK) to continue.
    ```

25. Press (ESC) (1).

26. Press (ENTER).

27. Use the arrow keys to move the cursor to `quit`. Press (ENTER).

28. Remove the cartridge tape labeled "ORACLE 7.0.12 Development Tools" from the tape drive. See "Inserting and Removing Cartridge Tapes" in Chapter 3, "Common System Procedures," for the procedure.

NOTE:
The **displaypkg** command will not show ORACLE add-on packages on the screen. To determine the ORACLE add-on packages on your system, read the **/oracle/pkginst/unix.rgs** file. For each ORACLE product installed, a corresponding entry containing the ORACLE product name is created in this file.

Installing the ORACLE SQL*Net TCP/IP Package

To install this optional feature package, do the following:

1. If you are not already logged in as **root**, do so now.

2. Enter **pkgadd -d diskette1**

   The system displays the following message:

   ```
   Insert diskette into Floppy Drive 1.
   Type [go] when ready,
       or [q] to quit:  (default:  go)
   ```

3. Insert the diskette labeled "SQL*NET TCP/IP for ORACLE 7.0.12" into the diskette drive. See "Inserting and Removing Diskettes" in Chapter 3, "Common System Procedures," for the procedure.

4. Press (ENTER).

   The system displays the following message:

   ```
   Installation in progress -- do not remove the diskette.

   The following packages are available:
     1. ora7sql    INTUITY SQL*NET TCP/IP for ORACLE
                   7.0.12 (i486)

   Select package(s) you wish to process (or 'all' to
   process all packages). (default: all) [?,??,q]:
   ```

5. Press (ENTER).

   The system displays the following message:

   ```
   PROCESSING:
   Set: INTUITY SQL*NET TCP/IP for ORACLE 7.0.12 (ora7sql)
   from <diskette1>

   INTUITY SQL*NET TCP/IP for ORACLE 7.0.12
   (i486)
   Using </> as the package base directory.
   Lucent Technologies Inc.
   ```

   The system displays several status messages and then the following message:

   ```
   Installation of SQL*NET TCP/IP for ORACLE 7.0.12
   (ora7sql) was successful.

   Insert diskette into Floppy Drive 1.
   Type [go] when ready,
       or [q] to quit:  (default:  go)
   ```

6. Enter **q**

7. Make sure that the light on the floppy disk drive is off and remove the diskette. See "Inserting and Removing Diskettes" in Chapter 3, "Common System Procedures," for the procedure.

For more information on this feature see *INTUITY™ CONVERSANT® Version 6.0 Communication Development*, 585-310-763.

Installing the Primary Rate Interface Packages

The primary rate interface packages include:

- ISDN primary rate interface
- Advanced primary rate interface (restricted availability)

The ISDN primary rate interface package must be installed first.

Installing the ISDN Primary Rate Interface Package

To install this optional feature package, do the following:

1. If you are not already logged in as **root**, do so now.
2. Enter **pkgadd -d diskette1**

   The system displays the following message:

   ```
   Insert diskette into Floppy Drive 1.
   Type [go] when ready,
       or [q] to quit:  (default:  go)
   ```

3. Insert the diskette labeled “ISDN Primary Rate Interface Package 1 of 1” into the diskette drive. See “Inserting and Removing Diskettes” in Chapter 3, “Common System Procedures,” for the procedure.
4. Press (ENTER).

   The system displays the following message:

   ```
   Installation in progress -- do not remove the diskette.
   ```

   ```
   The following packages are available:
     1. pri        INTUITY ISDN Primary Rate Interface
   Package (i486)
   ```

   ```
   Select package(s) you wish to process (or ‘all’ to
   process all packages). (default: all) [?,??,q]:
   ```

5. Press (ENTER).

   The system displays the following message:

   ```
   PROCESSING:
   Set: INTUITY ISDN Primary Rate Interface Package (pri)
   from <diskette1>
   ```

   ```
   INTUITY ISDN Primary Rate Interface Package
   (i486)
   Using </> as the package base directory.
   Lucent Technologies Inc.
   ```

   The system displays several status messages and then the following message:

   ```
   WARNING: Before this package can function, the T1/E1
            Driver package must be installed and then
            reboot the system to complete installation of
            the T1/E1 Driver package
   ```

   The system displays several status messages and then the following message:

   ```
   The UNIX Operating System kernel will be rebuilt
   now.  This will take some time. Please wait.
   ```

```
The UNIX Operating System kernel has been rebuilt.

RM PROFILE_SIZE has been changed.
Reboot before attempting to use this PRI package.
```

The system displays several status messages and then the following message:

```
This concludes the steps required to install the 'ISDN
Primary Rate Interface' feature. However, additional
steps are required to activate the feature. Consult the
INTUITY VIS Operations guide for the steps required.
Administration must also be done at the connecting end
(PBX, ACD, or other switch) to properly configure the
T1 or E1 channels.

Installation of INTUITY ISDN Primary Rate Interface
Package (pri) was successful.

Insert diskette into Floppy Drive 1.
Type [go] when ready,
    or [q] to quit:  (default:  go)
```

6. Enter **q**
7. Remove the diskette labeled "ISDN Primary Rate Interface Package 1 of 1" from the diskette drive. See "Inserting and Removing Diskettes" in Chapter 3, "Common System Procedures," for the procedure.
8. Reboot the system. See "Rebooting the UNIX System" in Chapter 3, "Common System Procedures," for the procedure.

For more information on this feature, see:

- Chapter 3, "Digital Telephony Interfaces," of *INTUITY™ CONVERSANT® Version 6.0 Communications Development*, 585-310-763
- Chapter 6, "Switch Interfaces," of *INTUITY™ CONVERSANT® Version 6.0 Administration*, 585-310-591

Installing the Advanced Primary Rate Interface Package

To install this optional feature package, do the following:

1. If you are not already logged in as **root**, do so now.
2. Enter **pkgadd -d diskette1**

   The system displays the following message:

```
Insert diskette into Floppy Drive 1.
Type [go] when ready,
    or [q] to quit:  (default:  go)
```

3. Insert the diskette labeled “Advanced PRI Package 1 of 1” into the diskette drive. See “Inserting and Removing Diskettes” in Chapter 3, “Common System Procedures,” for the procedure.

4. Press (ENTER).

   The system displays the following message:

   ```
   Installation in progress -- do not remove the diskette.

   The following packages are available:
     1. npri       INTUITY Advanced PRI Package
                   (i486)

   Select package(s) you wish to process (or ‘all’ to
   process all packages). (default: all) [?,??,q]:
   ```

5. Press (ENTER).

   The system displays the following message:

   ```
   PROCESSING:
   Set: INTUITY Advanced PRI Package (npri) from
   <diskette1>

   INTUITY Advanced PRI Package
   (i486)
   Using </> as the package base directory.
   Lucent Technologies Inc.
   ```

   The system displays several status messages and then the following message:

   ```
   This concludes the steps required to install the
   ‘Advanced PRI’ feature.

   Installation of INTUITY Advanced PRI Package (npri) was
   successful.

   Insert diskette into Floppy Drive 1.
   Type [go] when ready,
       or [q] to quit:  (default:  go)
   ```

6. Enter **q**

7. Remove the diskette labeled “Advanced PRI Package 1 of 1” from the diskette drive. See “Inserting and Removing Diskettes” in Chapter 3, “Common System Procedures,” for the procedure.

Installing the Script Builder Package

To install this optional feature package, do the following:

1. If you are not already logged in as **root**, do so now.

2. Enter **pkgadd -d diskette1**

The system displays the following message:

```
Insert diskette into Floppy Drive 1.
Type [go] when ready,
    or [q] to quit:  (default:  go)
```

3. Insert the diskette labeled “Script Builder 1 of 3” into the diskette drive. See “Inserting and Removing Diskettes” in Chapter 3, “Common System Procedures,” for the procedure.

4. Press (ENTER).

   The system displays the following message:

```
Installation in progress -- do not remove the diskette.

The following packages are available:
  1. sb         INTUITY Script Builder
                (i486)

Select package(s) you wish to process (or ‘all’ to
process all packages). (default: all) [?,??,q]:
```

5. Press (ENTER).

   The system displays the following message:

```
PROCESSING:
Set: INTUITY Script Builder (sb) from <diskette1>

INTUITY Script Builder
(i486)
Using </> as the package base directory.
Lucent Technologies Inc.
```

   The system displays several status messages and then the following message:

```
READY TO PROCESS:
    Package: INTUITY Script Builder (sb)
             diskette 2 of 3

Insert diskette 2 of 3 into Floppy Drive 1.
Type [go] when ready,
    or [q] to quit:  (default:  go)
```

6. Remove the diskette labeled “Script Builder 1 of 3” from the diskette drive. See “Inserting and Removing Diskettes” in Chapter 3, “Common System Procedures,” for the procedure.

7. Insert the diskette labeled “Script Builder 2 of 3” into the diskette drive. See “Inserting and Removing Diskettes” in Chapter 3, “Common System Procedures,” for the procedure.

8. Press (ENTER).

   The system displays several status messages and then the following message:

   ```
   READY TO PROCESS:
       Package: INTUITY Script Builder (sb)
                diskette 3 of 3

   Insert diskette 3 of 3 into Floppy Drive 1.
   Type [go] when ready,
       or [q] to quit:  (default:  go)
   ```

9. Remove the diskette labeled “Script Builder 2 of 3” from the diskette drive. See “Inserting and Removing Diskettes” in Chapter 3, “Common System Procedures,” for the procedure.

10. Insert the diskette labeled “Script Builder 3 of 3” into the diskette drive. See “Inserting and Removing Diskettes” in Chapter 3, “Common System Procedures,” for the procedure.

11. Press (ENTER).

    The system displays several status messages and then the following message:

    ```
    Installation of Script Builder (sb) was successful.

    Insert diskette into Floppy Drive 1.
    Type [go] when ready,
        or [q] to quit:  (default:  go)
    ```

12. Enter **q**

13. Remove the diskette labeled “Script Builder 3 of 3” from the diskette drive. See “Inserting and Removing Diskettes” in Chapter 3, “Common System Procedures,” for the procedure.

For more information on this feature, see *INTUITY™ CONVERSANT® Version 6.0 Application Development with Script Builder*, 585-310-760.

Installing T1 Packages

The T1 packages include:

- Line side T1 interface packages
- T1 E&M package

Installing the Line Side T1 Interface Packages

The line side T1 interface packages are separated by the type of switch to which they will interface. The following packages are available:

- Line Side T1 Interface Package - Definity
- Line Side T1 Interface Package - Galaxy

Installing the Line Side T1 Interface Package - Definity

To install this optional feature package, do the following:

1. If you are not already logged in as **root**, do so now.
2. Ensure that the T1 driver package has been installed.
3. Enter **pkgadd -d diskette1**

   The system displays the following message:

   ```
   Insert diskette into Floppy Drive 1.
   Type [go] when ready,
       or [q] to quit:  (default:  go)
   ```

4. Insert the diskette labeled “Line Side T1 Package - Definity 1 of 2” into the diskette drive. See “Inserting and Removing Diskettes” in Chapter 3, “Common System Procedures,” for the procedure.
5. Press (ENTER).

   The system displays the following message:

   ```
   Installation in progress -- do not remove the diskette.

   The following packages are available:
     1. lst1d      INTUITY Line Side T1 Package - Definity
                   (i486)

   Select package(s) you wish to process (or ‘all’ to
   process all packages). (default: all) [?,??,q]:
   ```

6. Press (ENTER).

   The system displays the following message:

   ```
   PROCESSING:
   Set: INTUITY Line Side T1 Package - Definity (lst1d)
   from <diskette1>

   INTUITY Line Side T1 Package - Definity
   (i486)
   Using </> as the package base directory.
   Lucent Technologies Inc.
   ```

   The system displays several status messages and then the following message:

```
READY TO PROCESS:
    Package: INTUITY Line Side T1 Package - Definity
            (lst1d) diskette 2 of 2

Insert diskette 2 of 2 into Floppy Drive 1.
Type [go] when ready,
    or [q] to quit:  (default:  go)
```

7. Remove the diskette labeled “Line Side T1 Package - Definity 1 of 2” from the diskette drive. See “Inserting and Removing Diskettes” in Chapter 3, “Common System Procedures,” for the procedure.
8. Insert the diskette labeled “Line Side T1 Package - Definity 2 of 2” into the diskette drive. See “Inserting and Removing Diskettes” in Chapter 3, “Common System Procedures,” for the procedure.
9. Press (ENTER).

   The system displays several status messages and then the following message:

```
This concludes the steps required to install the ‘Line
Side T1 - Definity’ feature.  However, additional steps
are required to activate the feature.  Consult the
INTUITY VIS Operations guide for the steps required.
Administration must also be done at the connecting end
(PBX, ACD, or other switch) to properly configure the
T1 channels.

Installation of INTUITY Line Side T1 Package - Definity
(lst1d) was successful.

Insert diskette into Floppy Drive 1.
Type [go] when ready,
    or [q] to quit:  (default:  go)
```

10. Enter **q**
11. Remove the diskette labeled “Line Side T1 Package - Definity 2 of 2” from the diskette drive. See “Inserting and Removing Diskettes” in Chapter 3, “Common System Procedures,” for the procedure.

Installing the Line Side T1 Interface Package - Galaxy

To install this optional feature package, do the following:

1. If you are not already logged in as **root**, do so now.
2. Ensure that the T1 driver package has been installed.
3. Enter **pkgadd -d diskette1**

The system displays the following message:

```
Insert diskette into Floppy Drive 1.
Type [go] when ready,
    or [q] to quit:  (default:  go)
```

4. Insert the diskette labeled “Line Side T1 Package - Galaxy 1 of 1” into the diskette drive. See “Inserting and Removing Diskettes” in Chapter 3, “Common System Procedures,” for the procedure.

5. Press (ENTER).

   The system displays the following message:

```
Installation in progress -- do not remove the diskette.

The following packages are available:
  1. lst1g      INTUITY Line Side T1 Package - Galaxy
                (i486)

Select package(s) you wish to process (or ‘all’ to
process all packages). (default: all) [?,??,q]:
```

6. Press (ENTER).

   The system displays the following message:

```
PROCESSING:
Set: INTUITY Line Side T1 Package - Galaxy (lst1g) from
<diskette1>

INTUITY Line Side T1 Package - Galaxy
(i486)
Using </> as the package base directory.
Lucent Technologies Inc.
```

   The system displays several status messages and then the following message:

```
This concludes the steps required to install the ‘Line
Side T1 - Galaxy’ feature.  However, additional steps
are required to activate the feature.  Consult the
INTUITY VIS Operations guide for the steps required.
Administration must also be done at the connecting end
(PBX, ACD, or other switch) to properly configure the
T1 channels.

Installation of INTUITY Line Side T1 Package - Galaxy
(lst1g) was successful.

Insert diskette into Floppy Drive 1.
Type [go] when ready,
    or [q] to quit:  (default:  go)
```

7. Enter **q**
8. Remove the diskette labeled “Line Side T1 Package - Galaxy 1 of 1” from the diskette drive. See “Inserting and Removing Diskettes” in Chapter 3, “Common System Procedures,” for the procedure.

Installing the T1 E&M Package

To install this optional feature package, do the following:

1. If you are not already logged in as **root**, do so now.
2. Ensure that the T1 driver package has been installed.
3. Enter **pkgadd -d diskette1**

   The system displays the following message:

   ```
   Insert diskette into Floppy Drive 1.
   Type [go] when ready,
       or [q] to quit:  (default:  go)
   ```

4. Insert the diskette labeled “T1 E&M Package 1 of 1” into the diskette drive. See “Inserting and Removing Diskettes” in Chapter 3, “Common System Procedures,” for the procedure.
5. Press (ENTER).

   The system displays the following message:

   ```
   Installation in progress -- do not remove the diskette.
   ```

   ```
   The following packages are available:
     1. t1em       INTUITY T1 E&M Interface Package
                   (i486)
   ```

   ```
   Select package(s) you wish to process (or ‘all’ to
   process all packages). (default: all) [?,??,q]:
   ```

6. Press (ENTER).

   The system displays the following message:

   ```
   PROCESSING:
   Set: INTUITY T1 E&M Interface Package (t1em) from
   <diskette1>
   ```

   ```
   INTUITY T1 E&M Interface Package
   (i486)
   Using </> as the package base directory.
   Lucent Technologies Inc.
   ```

   The system displays several status messages and then the following message:

   ```
   This concludes the steps required to install the ‘T1
   E&M Interface Package’ feature.  However, additional
   steps are required to activate the feature.  Consult
   ```

```
the INTUITY VIS Operations guide for the steps
required. Administration must also be done at the
connecting end (PBX, ACD, or other switch) to properly
configure the T1 channels.

Installation of INTUITY T1 E&M Interface Package (t1em)
was successful.

Insert diskette into Floppy Drive 1.
Type [go] when ready,
    or [q] to quit:  (default:  go)
```

7. Enter **q**
8. Remove the diskette labeled "T1 E&M Package 1 of 1" from the diskette drive. See "Inserting and Removing Diskettes" in Chapter 3, "Common System Procedures," for the procedure.

Installing the Text To Speech Package

NOTE:
If you are installing the TTS package and feature_tst is already installed on your system (as in assisted upgrades), once you have finished installing all other desired, you must remove feature_tst and reinstall it in order to select the TTS test.

To install the TTS package, do the following:

1. If you are not already logged in as **root**, do so now.
2. Enter **pkgadd -d diskette1**

   The system displays the following message:

```
Insert diskette into Floppy Drive 1.
Type [go] when ready,
    or [q] to quit:  (default:  go)
```

3. Insert the diskette labeled "Text to Speech Package 1 of 8" into the diskette drive. See "Inserting and Removing Diskettes" in Chapter 3, "Common System Procedures," for the procedure.
4. Press (ENTER).

   The system displays the following message:

```
Installation in progress -- do not remove the diskette.

The following packages are available:
  1. tts        INTUITY Text To Speech Package
                (i486)

Select package(s) you wish to process (or 'all' to
process all packages). (default: all) [?,??,q]:
```

5. Press (ENTER).

   The system displays the following message:

   ```
   PROCESSING:
   Set: INTUITY Text To Speech Package (tts) from
   <diskette1>
   ```

   ```
   INTUITY Text To Speech Package
   (i486)
   Using </> as the package base directory.
   Lucent Technologies Inc.
   ```

   The system displays several status messages and then the following message:

   ```
   READY TO PROCESS:
       Package: INTUITY Text To Speech Package (tts)
                diskette 2 of 8
   ```

   ```
   Insert diskette 2 of 8 into Floppy Drive 1.
   Type [go] when ready,
       or [q] to quit:  (default:  go)
   ```

6. Remove the diskette labeled “Text to Speech Package 1 of 8” from the diskette drive. See “Inserting and Removing Diskettes” in Chapter 3, “Common System Procedures,” for the procedure.

7. Insert the diskette labeled “Text to Speech Package 2 of 8” into the diskette drive. See “Inserting and Removing Diskettes” in Chapter 3, “Common System Procedures,” for the procedure.

8. Press (ENTER).

   The system displays several status messages and then the following message:

   ```
   READY TO PROCESS:
       Package: INTUITY Text To Speech Package (tts)
                diskette 3 of 8
   ```

   ```
   Insert diskette 3 of 8 into Floppy Drive 1.
   Type [go] when ready,
       or [q] to quit:  (default:  go)
   ```

9. Remove the diskette labeled “Text to Speech Package 2 of 8” from the diskette drive. See “Inserting and Removing Diskettes” in Chapter 3, “Common System Procedures,” for the procedure.

10. Insert the diskette labeled “Text to Speech Package 3 of 8” into the diskette drive. See “Inserting and Removing Diskettes” in Chapter 3, “Common System Procedures,” for the procedure.

11. Press (ENTER).

    The system displays several status messages and then the following message:

```
READY TO PROCESS:
    Package: INTUITY Text To Speech Package (tts)
             diskette 4 of 8

Insert diskette 4 of 8 into Floppy Drive 1.
Type [go] when ready,
    or [q] to quit:  (default:  go)
```

12. Remove the diskette labeled “Text to Speech Package 3 of 8” from the diskette drive. See “Inserting and Removing Diskettes” in Chapter 3, “Common System Procedures,” for the procedure.

13. Insert the diskette labeled “Text to Speech Package 4 of 8” into the diskette drive. See “Inserting and Removing Diskettes” in Chapter 3, “Common System Procedures,” for the procedure.

14. Press (ENTER).

    The system displays several status messages and then the following message:

```
READY TO PROCESS:
    Package: INTUITY Text To Speech Package (tts)
             diskette 5 of 8

Insert diskette 5 of 8 into Floppy Drive 1.
Type [go] when ready,
    or [q] to quit:  (default:  go)
```

15. Remove the diskette labeled “Text to Speech Package 4 of 8” from the diskette drive. See “Inserting and Removing Diskettes” in Chapter 3, “Common System Procedures,” for the procedure.

16. Insert the diskette labeled “Text to Speech Package 5 of 8” into the diskette drive. See “Inserting and Removing Diskettes” in Chapter 3, “Common System Procedures,” for the procedure.

17. Press (ENTER).

    The system displays several status messages and then the following message:

```
READY TO PROCESS:
    Package: INTUITY Text To Speech Package (tts)
             diskette 6 of 8

Insert diskette 6 of 8 into Floppy Drive 1.
Type [go] when ready,
    or [q] to quit:  (default:  go)
```

18. Remove the diskette labeled “Text to Speech Package 5 of 8” from the diskette drive. See “Inserting and Removing Diskettes” in Chapter 3, “Common System Procedures,” for the procedure.

19. Insert the diskette labeled “Text to Speech Package 6 of 8” into the diskette drive. See “Inserting and Removing Diskettes” in Chapter 3, “Common System Procedures,” for the procedure.

20. Press (ENTER).

    The system displays several status messages and then the following message:

```
READY TO PROCESS:
    Package: INTUITY Text To Speech Package (tts)
             diskette 7 of 8

Insert diskette 7 of 8 into Floppy Drive 1.
Type [go] when ready,
    or [q] to quit:  (default:  go)
```

21. Remove the diskette labeled “Text to Speech Package 6 of 8” from the diskette drive. See “Inserting and Removing Diskettes” in Chapter 3, “Common System Procedures,” for the procedure.

22. Insert the diskette labeled “Text to Speech Package 7 of 8” into the diskette drive. See “Inserting and Removing Diskettes” in Chapter 3, “Common System Procedures,” for the procedure.

23. Press (ENTER).

    The system displays several status messages and then the following message:

```
READY TO PROCESS:
    Package: INTUITY Text To Speech Package (tts)
             diskette 8 of 8

Insert diskette 8 of 8 into Floppy Drive 1.
Type [go] when ready,
    or [q] to quit:  (default:  go)
```

24. Remove the diskette labeled “Text to Speech Package 7 of 8” from the diskette drive. See “Inserting and Removing Diskettes” in Chapter 3, “Common System Procedures,” for the procedure.

25. Insert the diskette labeled “Text to Speech Package 8 of 8” into the diskette drive. See “Inserting and Removing Diskettes” in Chapter 3, “Common System Procedures,” for the procedure.

26. Press (ENTER).

    The system displays several status messages and then the following message:

```
Installation of Text To Speech Package (tts) was
successful.

Insert diskette into Floppy Drive 1.
Type [go] when ready,
    or [q] to quit:  (default:  go)
```

27. Enter **q**
28. Remove the diskette labeled "Text to Speech Package 8 of 8" from the diskette drive. See "Inserting and Removing Diskettes" in Chapter 3, "Common System Procedures," for the procedure.

For more information on this feature package, see *INTUITY™ CONVERSANT® Version 6.0 Speech Development, Processing, and Recognition*, 585-310-762.

Installing the WholeWord Recognition Packages

The WholeWord recognition packages include:

- WholeWord Recognition - Base
- WholeWord Recognition - Language

Installing the WholeWord Recognition - Base Package

NOTE:
If you are installing the WholeWord Recognition - Base package and feature_tst is already installed on your system (as in assisted upgrades), once you have finished installing all other desired, you must remove feature_tst and reinstall it in order to select the ASR test.

To install the WholeWord Recognition - Base feature package, do the following:

1. If you are not already logged in as **root**, do so now.
2. Enter **pkgadd -d diskette1**

   The system displays the following message:

   ```
   Insert diskette into Floppy Drive 1.
   Type [go] when ready,
       or [q] to quit:  (default:  go)
   ```

3. Insert the diskette labeled "WholeWord Recognition - Base 1 of 1" into the diskette drive. See "Inserting and Removing Diskettes" in Chapter 3, "Common System Procedures," for the procedure.
4. Press (ENTER).

   The system displays the following message:

   ```
   Installation in progress -- do not remove the diskette.

   The following packages are available:
     1. asr        INTUITY WholeWord Recognition - Base
                   (i486)
   ```

```
Select package(s) you wish to process (or 'all' to
process all packages). (default: all) [?,??,q]:
```

5. Press (ENTER).

   The system displays the following message:

```
PROCESSING:
Set: INTUITY WholeWord Recognition - Base (asr) from
<diskette1>

INTUITY WholeWord Recognition - Base
(i486)
Using </> as the package base directory.
Lucent Technologies Inc.
```

   The system displays several status messages and then the following message:

```
Installation of INTUITY WholeWord Recognition - Base
(asr) was successful.

Insert diskette into Floppy Drive 1.
Type [go] when ready,
    or [q] to quit:  (default:  go)
```

6. Enter **q**

7. Remove the diskette labeled "WholeWord Recognition - Base 1 of 1" from the diskette drive. See "Inserting and Removing Diskettes" in Chapter 3, "Common System Procedures," for the procedure.

Installing the WholeWord Recognition - Language Package

To install this optional feature package, do the following:

1. If you are not already logged in as **root**, do so now.

2. Enter **pkgadd -d diskette1**

   The system displays the following message:

```
Insert diskette into Floppy Drive 1.
Type [go] when ready,
    or [q] to quit:  (default:  go)
```

3. Insert the diskette labeled "WholeWord Recognition - Language 1 of 1" into the diskette drive. See "Inserting and Removing Diskettes" in Chapter 3, "Common System Procedures," for the procedure.

4. Press (ENTER).

   The system displays the following message:

```
Installation in progress -- do not remove the diskette.
```

```
The following packages are available:
  1. usrecog    INTUITY WholeWord Recognition - US
                English (i486)

Select package(s) you wish to process (or 'all' to
process all packages). (default: all) [?,??,q]:
```

5. Press (ENTER).

   The system displays the following message:

```
PROCESSING:
Set: INTUITY WholeWord Recognition - US English
(usrecog) from <diskette1>

INTUITY WholeWord Recognition - US English
(i486)
Using </> as the package base directory.
Lucent Technologies Inc.
```

   The system displays several status messages and then the following message:

```
Installation of INTUITY WholeWord Recognition - US
English (usrecog) was successful.

Insert diskette into Floppy Drive 1.
Type [go] when ready,
    or [q] to quit:  (default:  go)
```

6. Enter **q**

7. Remove the diskette labeled "WholeWord Recognition - Language 1 of 1" from the diskette drive. See "Inserting and Removing Diskettes" in Chapter 3, "Common System Procedures," for the procedure.

For more information on this feature package, see *INTUITY™ CONVERSANT® Version 6.0 Speech Development, Processing, and Recognition*, 585-310-762.

Installing the Feature Test Script Package

Use the following procedure to install this optional feature package ONLY AFTER all the other optional feature packages have been installed:

1. The voice system must be running. To see if the system is running, use the **who -r** command.

   The voice system is running if the run-level is 4. If the system is not running, execute the **start_vs** command.

2. Enter **pkgadd -d diskette1**

   The system displays the following message:

```
Insert diskette into Floppy Drive 1.
Type [go] when ready,
    or [q] to quit:  (default:  go)
```

3. Insert the diskette labeled “Feature Test Script Package 1 of 3” into the diskette drive. See “Inserting and Removing Diskettes” in Chapter 3, “Common System Procedures,” for the procedure.

4. Press (ENTER).

   The system displays the following message:

```
Installation in progress -- do not remove the diskette.

The following packages are available:
  1. ftst       INTUITY Feature Test Script Package
                (i486)

Select package(s) you wish to process (or ‘all’ to
process all packages). (default: all) [?,??,q]:
```

5. Press (ENTER).

   The system displays the following message:

```
PROCESSING:
Set: INTUITY Feature Test Script Package (ftst) from
<diskette1>

INTUITY Feature Test Script Package
(i486)

Using </> as the package base directory.
Lucent Technologies Inc.
```

   The system displays several status messages and then the following message:

6. Enter **y**

   The system displays the following message:

```
Do you want to include the Simple CCA test? (y/n)
```

7. Enter **y**

   The system displays the following message:

```
Do you want to include the Full CCA test? (y/n)
```

8. Enter **y**

   The system displays the following message:

```
Do you want to include the Playback and Coding test?
(y/n)
```

9. Enter **y**

   The system displays the following message:

```
Do you want to include the Chantst test? (y/n)
```

10. Enter **y**

    The system displays the following message:

    ```
    Do you want to include the Transfer Test test? (y/n)
    ```

11. Enter **y**

    The system displays the following message:

    ```
    Do you want to include the Dial Pulse Recognition test?
    (y/n)
    ```

12. Enter **y**

    The system displays the following message:

    ```
    READY TO PROCESS:
        Package: INTUITY Feature Test Script Package (ftst)
    diskette 2 of 3
    ```

    ```
    Insert diskette 2 of 3 into Floppy Drive 1.
    Type [go] when ready,
        or [q] to quit:  (default:  go)
    ```

    ```
    Do you want to include the Speech Recognition test?
    (y/n)
    ```

13. Remove the diskette labeled “Feature Test Script Package 1 of 3” from the diskette drive. See “Inserting and Removing Diskettes” in Chapter 3, “Common System Procedures,” for the procedure.

14. Insert the diskette labeled “Feature Test Script Package 2 of 3” into the diskette drive. See “Inserting and Removing Diskettes” in Chapter 3, “Common System Procedures,” for the procedure.

15. Press (ENTER).

    The system displays several status messages and then the following message:

    ```
    READY TO PROCESS:
        Package: INTUITY Feature Test Script Package (ftst)
    diskette 3 of 3
    ```

    ```
    Insert diskette 3 of 3 into Floppy Drive 1.
    Type [go] when ready,
        or [q] to quit:  (default:  go)
    ```

16. Remove the diskette labeled “Feature Test Script Package 2 of 3” from the diskette drive. See “Inserting and Removing Diskettes” in Chapter 3, “Common System Procedures,” for the procedure.

17. Insert the diskette labeled “Feature Test Script Package 3 of 3” into the diskette drive. See “Inserting and Removing Diskettes” in Chapter 3, “Common System Procedures,” for the procedure.

18. Press (ENTER).

    The system displays several status messages and then the following message:

    ```
    The UNIX Operating System kernel will be rebuilt
    to include your configuration changes during the
    next system reboot.
    ```

    ```
    Installation of Adjunct/Switch Application Interface
    Package (asai) was successful.
    ```

    ```
    Insert diskette into Floppy Drive 1.
    Type [go] when ready,
        or [q] to quit:  (default:  go)
    ```

19. Enter **q**

20. Remove the diskette labeled "Feature Test Script Package 3 of 3" from the diskette drive. See "Inserting and Removing Diskettes" in Chapter 3, "Common System Procedures," for the procedure.

    NOTE:
    If you answer **y** and that package has not been installed on your system, you are given an opportunity to cancel the installation. The following is an example for Full CCA:

    ```
    Displaypkg shows that Full CCA is not installed.
    You will not be able to test Full CCA with this
    script.
    Type q to quit or return to continue.
    ```

Removing Software Packages

Use the **removepkg** or **pkgrm** commands to remove a software package from your system. See the *INTUITY™ CONVERSANT® Version 6.0 Administration*, 585-310-591, book for more information on these commands.

There are some *important* issues you need to be aware of when removing software from your system:

- Remove all services, functions, or card assignments before removing any software packages.
- When removing the Application software (installed in Chapter 10), you are asked if you want to remove speech file systems. Answer *no* to this prompt.
- During an initial installation of the Base ORACLE RDBMS package, a user called "oracle" is created. This user is NOT removed when the Base ORACLE RDBMS package is removed. Once all the base and add-on ORACLE packages have been removed, if you want to remove the

"oracle" user, do so through **SYSADM**. See Appendix A, "System Administration Features," in *INTUITY™ CONVERSANT® Version 6.0 Administration*, 585-310-591.

To remove software packages, do the following:

1. Enter **displaypkg** at the system prompt #.

   The system displays all the packages installed on your system.

2. Once you have determined the packages to be removed, enter **removepkg** or **pkgrm**
   At the prompt, enter the number (as it appears on the screen) beside the package you want to remove.

Repeat Step 2 for each package you want to remove.

WARNING:

After you have removed packages from a UnixWare system, you MUST reboot the system before reinstalling packages. You can remove more than one package before rebooting, but you must reboot before reinstalling any packages.

System Configuration

A

Overview

This appendix describes the placement of components in the MAP/100P and the operation of the Hardware Resource Allocator.

Purpose

The purpose of this appendix is to enable the user to reconfigure the INTUITY CONVERSANT system in the event that hardware needs to be added or removed.

Component Assignments

The following hardware components are discussed in this section:

- Circuit cards
- Operating hardware

Circuit Cards

Circuit cards are placed in the MAP/100P in locations called *slots*. Slots are numbered PCI 1 through PCI 3 and ISA 2 through ISA 6 from the top of the MAP/100P to the bottom. Slots are accessible from the back of the MAP/100P (Figure A-1).

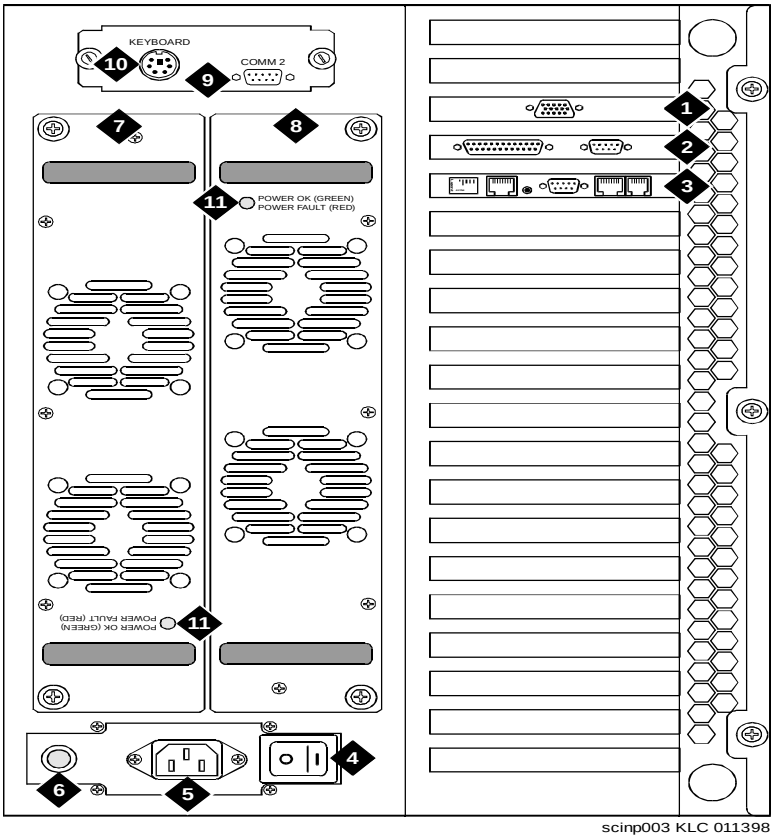

1.	Video circuit card	7.	Power Supply 1
2.	P5 200 MHz CPU	8.	Power Supply 2
3.	Remote maintenance card	9.	COM2 port
4.	ON/OFF power switch	10.	Keyboard port
5.	AC power input	11.	Power supply LED
6.	Fuse		

Figure A-1. Back View of the MAP/100P

Operating Hardware

Operating hardware is placed in the MAP/100P in locations called *bays*. The MAP/100P has two types of bays:

- Peripheral bays
- Hard disk drive bays

The peripheral bays are numbered 1 through 4. Hard disk drive bays are numbered 0 through 5. Bays are accessible from the front of the MAP/100P (Figure A-2).

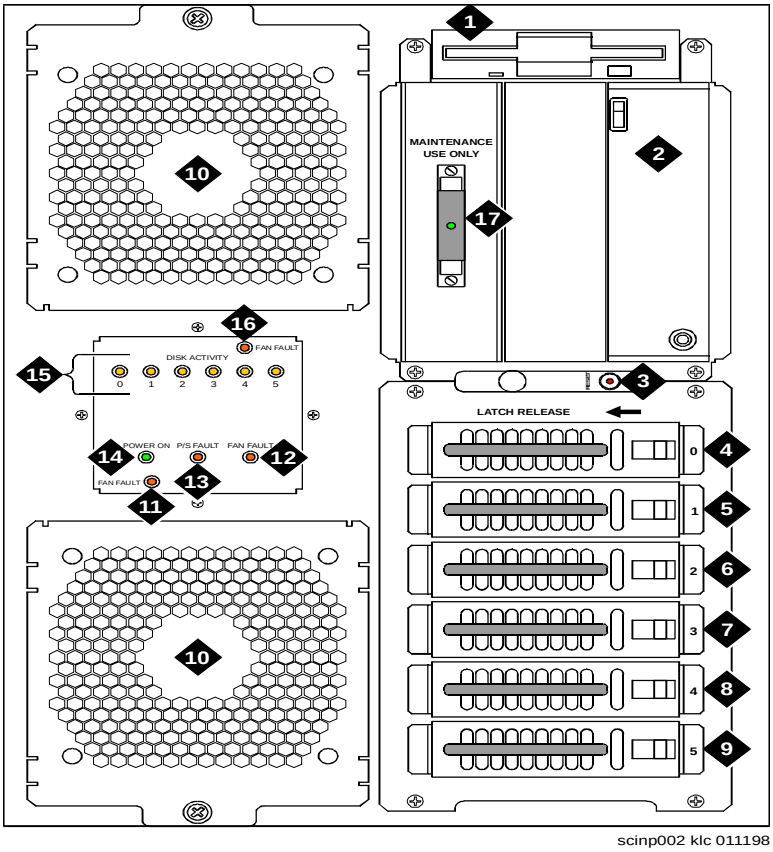

scinp002 klc 011198

1. Diskette drive
2. Cartridge tape drive
3. Reset push button
4. Hard Disk Drive 0
5. Hard Disk Drive 1
6. Hard Disk Drive 2
7 Hard Disk Drive 3
8. Hard Disk Drive 4
9. Hard Disk Drive 5
10. Circuit card cage fan
11. Fan fault LED
12. Fan fault LED
13. Power supply fault LED
14. Power On LED
15. Hard disk drive activity LEDs
16. Fan fault LED
17. SCSI terminating resistor

Figure A-2. Front View of the MAP/100P

The following peripheral bay assignments are fixed in the MAP/100P:

- Bay 1 — External SCSI connector
- Bay 2 — Empty
- Bay 3 — Cartridge tape drive
- Bay 4 — Diskette drive

The following hard disk drive bay assignments are fixed in the MAP/100P.

- Bay 0 — Hard Disk Drive 0
- Bay 1 — Hard Disk Drive 1
- Bay 2 — Hard Disk Drive 2
- Bay 3 — Hard Disk Drive 3
- Bay 4 — Hard Disk Drive 4
- Bay 5 — Hard Disk Drive 5

The following slot assignment is fixed in the MAP/100P:

- Slot 16 — Remote maintenance circuit card
- Slot 17 — P5 200 MHz CPU circuit card
- Slot 18 — Video circuit card

Hardware Resource Allocator Operation

Operation of the Hardware Resource Allocator includes the following tasks:

- Adding Hardware to an Existing Configuration
- Removing Hardware from an Existing Configuration
- Specifying a New Configuration
- Saving a Configuration
- Viewing a Configuration
- Comparing a Configuration
- Presetting Hardware Resources

Adding Hardware to an Existing Configuration

When you modify an existing configuration, you may have to change the current resource assignments:

- Differences in slot assignments or serial/parallel port assignments *will not* require switch settings and/or driver software changes. However, you may need to rearrange the cards and/or cables to fit the new configuration output.
- Differences in INTR, DMAC, IOADDR, or RAMADDR assignments *will* in most cases require you to change switch settings and reinstall driver software for the affected cards.

To add hardware to an existing configuration, do the following:

1. Enter **get_config**

The system displays the following message:

```
This program retrieves the /vs/data/confData file for a
given VIS machine from floppy disk.  This file
represents the configuration of the machine and is
required in order for the /vs/bin/util/configure
program to upgrade the machine with new or additional
hardware.

Please insert the "CONFIGURATION DATA" floppy for this
machine.

Press <Enter> when ready to proceed...
```

2. Insert the diskette labeled *Configuration Data* into the diskette drive. See "Inserting and Removing Diskettes" in Chapter 3, "Common System Procedures", for the procedure.

3. Press (ENTER).

   The system displays the following message:

   ```
   Working.../vs/data/confData retrieved

   UNIX_SV#
   ```

4. Make a hard copy of the current configuration by printing the output of the **show_config** command. See "Viewing a Configuration" below for an explanation of the **show_config** command.

5. Enter **configure**

   The system displays the following message:

   ```
   A configuration file, confData, exits.
   Do you wish to make changes to the previous
   configuration [y|n]?
   ```

6. Enter **y**

   The system displays the following message:

   ```
   Reading old configuration. Please wait...

   Successfully read MAP/100 Platform with ISA backplane
   and 486CPU2 CPU.

   Adding device ADAPSCSI
   Adding device VIDEO
   Adding device SCSIHD
   Adding device SCSITAPE

   Press any key to continue...
   ```

   NOTE:
   The above message is dependent on your system configuration and may look different than the one shown.

7. Press (ENTER).

The system displays the Device Menu screen (Figure A-7).

8. Select the hardware item you want to add to the configuration file. Use the ▲ up arrow and ▼ down arrow keys to move through the screen.
9. Press ENTER.
10. If the system displays the following message:

    ```
    Enter quantity to add (X max in multiples of 1):
    ```

    Enter the quantity of this hardware item you want to install in your system.

    If the system does not display this message, continue with Step 11.
11. If the system displays the following message:

    ```
    Do you wish to preset hardware options for device
    XXXX [y|n]?
    ```

    Enter **n**

    If the system does not display this message, continue with Step 12.
12. When the system displays the following message:

    ```
    1 XXXX device(s) added.
    Press Enter to continue...
    ```

    Press ENTER.

    The system displays the Device Menu screen (Figure A-7).
13. When you are done adding hardware to the configuration press **d**

    The system displays the following message:

    ```
    Configuration complete and successful.
    Configuration data written to file: /vs/data/confData.
    ```
14. View the new configuration file to make sure you have added the correct hardware. See "Viewing a Configuration" below for the procedure.
15. Make the necessary adjustments on the installed hardware based on the new configuration.
16. Save the new configuration. See "Saving a Configuration" below for the procedure.
17. Enter **hconchk**

    The system displays the following message:

    ```
    hconchk: The hardware configuration check is complete.
    ```

Removing Hardware from an Existing Configuration

When you modify an existing configuration, you may have to change the current resource assignments:

- Differences in slot assignments or serial/parallel port assignments *will not* require switch settings and/or driver software changes. However, you may need to rearrange the cards and/or cables to fit the new configuration output.
- Differences in INTR, DMAC, IOADDR, or RAMADDR assignments *will* in most cases require you to change switch settings and reinstall driver software for the affected cards.

To remove hardware from an existing configuration, do the following:

1. Enter **get_config**

   The system displays the following message:

   ```
   This program retrieves the /vs/data/confData file for a
   given VIS machine from floppy disk.  This file
   represents the configuration of the machine and is
   required in order for the /vs/bin/util/configure
   program to upgrade the machine with new or additional
   hardware.

   Please insert the “CONFIGURATION DATA” floppy for this
   machine.

   Press <Enter> when ready to proceed...
   ```

2. Insert the diskette labelled *Configuration Data* into the diskette drive. See “Inserting and Removing Diskettes” in Chapter 3, “Common System Procedures”, for the procedure.

3. Press (ENTER).

   The system displays the following message:

   ```
   Working.../vs/data/confData retrieved

   UNIX_SV#
   ```

4. Make a hard copy of the current configuration by printing the output of the **show_config** command. See “Viewing a Configuration” below for an explanation of the **show_config** command.

5. Enter **configure**

   The system displays the following message:

   ```
   A configuration file, confData, exits.
   Do you wish to make changes to the previous
   configuration [y|n]?
   ```

6. Enter **y**

   The system displays the following message:

   ```
   Reading old configuration. Please wait...

   Successfully read MAP/100 Platform with ISA backplane
   and 486CPU2 CPU.
   ```

```
Adding device ADAPSCSI
Adding device VIDEO
Adding device SCSIHD
Adding device SCSITAPE

Press any key to continue...
```

NOTE:
The above message is dependent on your system configuration and may look different than the one shown.

7. Press (ENTER).

   The system displays the Device Menu screen (Figure A-7).

8. Press **r**

   The system displays the Currently Selected Devices screen (Figure A-3).

```
                    Currently Selected Devices

1    SCSI_TAPE_DRIVE        5    SCSI_TAPE_DRIVE     9    SP
2    VIDEO_CONTROLLER       6    16MB_SIMM           10   SP
3    RMB_M                  7    16MB_SIMM           11   IVP6
4    SCSI_DISK              8    COMPANION           12   ETHERNET

                 Select Device to remove, q to quit
```

Figure A-3. Currently Selected Devices Screen

NOTE:
The above screen is dependent on your system configuration and may look different than the one shown.

9. Place the cursor on the hardware item you want to remove from the configuration file. Use the (▲) up arrow and (▼) down arrow keys to move through the screen.

10. Press (ENTER).

    The system displays the following message:

```
You have currently selected 1 XX device(s)
How many do you wish to remove?
```

11. Enter the quantity of the hardware item you want to remove from your system.

    The system displays the Currently Selected Devices screen (Figure A-3).

12. If you want to remove additional hardware from your system, repeat Steps 9 through 11.

    If you are done removing hardware from your system press **q**

    The system displays the Device Menu screen (Figure A-7).

13. Press **d**

    The system displays the following message:

    ```
    Configuration complete and successful.
    Configuration data written to file: /vs/data/confData.
    ```

14. View the new configuration file to make sure you have removed the correct hardware. See "Viewing a Configuration" below for the procedure.

15. Make the necessary adjustments on the installed hardware based on the new configuration.

16. Save the new configuration. See "Saving a Configuration" below for the procedure.

17. Enter **hconchk**

    The system displays the following message:

    ```
    hconchk: The hardware configuration check is complete.
    ```

Specifying a New Configuration

To specify a new configuration, do the following:

1. Enter **configure new**

   The system displays the Platform Menu screen (Figure A-4).

```
--------------------------------------------------------------------------------
                                  Platform Menu
--------------------------------------------------------------------------------
     1    MAP/5P                    3    MAP/100
     2    MAP/40                    4    MAP/100C
--------------------------------------------------------------------------------
                                Select a Platform
```

Figure A-4. Platform Menu Screen

2. Place the cursor on `MAP/100`.
3. Press (ENTER).

   The system displays the Backplane Menu screen (Figure A-5).

```
--------------------------------------------------------------------------------
                                  Backplane Menu
--------------------------------------------------------------------------------
     1    ISA                 2    PCI
--------------------------------------------------------------------------------
                          Select a Backplane for MAP/100
```

Figure A-5. Backplane Menu screen

NOTE:
The above menu screen is dependent on your system configuration and may look different than the one shown.

4. Place the cursor on appropriate backplane type.
5. Press (ENTER).

   The system displays the CPU Menu screen (Figure A-6).

```
--------------------------------------------------------------------------------
                                    CPU Menu
--------------------------------------------------------------------------------
     1    Pentium75
     2    Pentium120
--------------------------------------------------------------------------------
                        Select a CPU for MAP/100 with PCI
```

Figure A-6. CPU Menu screen

NOTE:
The above menu screen is dependent on your system configuration and may look different than the one shown.

6. Place the cursor on the appropriate CPU type.
7. Press (ENTER).

   The system displays the Device Menu screen (Figure A-7).

```
                                    Device Menu

1    SCSI_TAPE_DRIVE          17   T1                   33   EICON
2    SCSI_DISK                18   T1_AYC21             34   8_PORT_SERIAL_EXP
3    PCI_SCSI                 19   E1_AYC21             35   MEGA_8_PORT_SERIAL
4    EXT_SCSI                 20   SP                   36   REMOTE_TERMINAL
5    16MB_SIMM                21   MEGASP               37   EXTERNAL_MODEM
6    32MB_SIMM                22   SSP                  38   SERIAL_PRINTER
7    VIDEO_CONTROLLER         23   COMPANION            39   SERIAL_MOUSE
8    RMB_M                    24   TOKEN_RING           40   PS2_MOUSE
9    RMB_SP                   25   CLEO_PCXL            41   PARALLEL_PRINTER
10   IVP6                     26   FIFO_SIB             42   FAX
11   IVC6                     27   ETHERNET             43   DCP
12   IVP6IU                   28   PCI_LAN              44   DCP_NO_DMA
13   IVP6IA                   29   IPCI                 45   COLOR_CONSOLE
14   IVP6ID                   30   PROTOCOL_CONV        46   VOICE_WORKSTATION
15   IVC6IA                   31   ACCX
16   NGTR6                    32   GPSYNC

Select Device #, r to remove, s to show, d when done, or q to quit
```

Figure A-7. Device Menu screen

NOTE:
The above menu screen is dependent on your system configuration and may look different than the one shown.

8. Place the cursor on the hardware item you want to add to the configuration file. Use the ▲ up arrow and ▼ down arrow keys to move through the screen.
9. Press ENTER.
10. If the system displays the following message:

    `Enter quantity to add (X max in multiples of 1):`

    Enter the quantity of this hardware item you want to install in your system.

    If the system does not display this message, continue with Step 11.
11. If the system displays the following message:

    `Do you wish to preset hardware options for device XXXX [y|n]?`

    Enter **n**

    If the system does not display this message, continue with Step 12.

12. When the system displays the following message:

    ```
    1 XXXX device(s) added.
    Press Enter to continue...
    ```

    Press (ENTER).

    The system displays the Device Menu screen (Figure A-7).

13. When you are done adding hardware to the configuration press **d**

    The system displays the following message:

    ```
    Configuration complete and successful.
    Configuration data written to file: /vs/data/confData.
    ```

14. View the new configuration file to make sure you have added the correct hardware. See "Viewing a Configuration" above for the procedure.

15. Make the necessary adjustments on the installed hardware based on the new configuration.

16. Save the new configuration. See "Saving a Configuration" below for the procedure.

17. Enter **hconchk**

    The system displays the following message:

    ```
    hconchk: The hardware configuration check is complete.
    ```

Saving a Configuration

The system configuration should be saved to diskette whenever a change has been made. To save the system configuration, do the following:

1. Enter **save_config**

   The system displays the following message:

   ```
   This program copies the /vs/data/confData file for a
   given VIS machine to floppy disk. This file represents
   the configuration of the machine. The floppy must be
   kept in a safe place. It will be required as input for
   the /vs/bin/util/configure program in the event of a
   hardware upgrade to this machine.
   Please insert the "CONFIGURATION DATA" floppy for this
   machine.
   Press <Enter> when ready to proceed...
   ```

2. Insert the diskette labeled *Configuration Data* into the diskette drive. See "Inserting and Removing Diskettes" in Chapter 3, "Common System Procedures", for the procedure.

3. Press (ENTER).

   The system displays the following message:

   ```
   Working.../vs/data/confData
   /vs/data/confData saved
   ```

   ```
   UNIX_SV#
   ```

4. Remove the diskette labeled *Configuration Data* from the diskette drive. See "Inserting and Removing Diskettes" in Chapter 3, "Common System Procedures", for the procedure.

   CAUTION:
   Be sure you put the diskette in a safe place.

Viewing a Configuration

The show_config command allows you to view:

- Successful configurations
- Unsuccessful configurations
- Dated configurations

Viewing a Successful Configuration

To view a successful system configuration, do the following:

1. Enter **show_config**

   The system displays the following message:

   ```
   Using /vs/data/confData as configuration data input
   file. Output file is./configuration
   ```

2. If the system displays the following message:

   ```
   A "./configuration" file already exists
   ```

   ```
   Overwrite? [y|n]
   ```

   Enter **y**

3. The system displays the following message:

   ```
   Configuration has been written to the "./configuration"
   file.
   ```

4. Enter **vi ./configuration**

   The system displays the System Configuration Table screen (Figure A-8).

```
                        SYSTEM CONFIGURATION TABLE


PLATFORM

MAP/100
Description:   MAP/100 platform w/ PCI backplane and Pentium 133MHz CPU
Backplane:     PCI
CPU:           Pentium 133


DEVICES

Device Name:             VIDEO_CONTROLLER
Device Description:      [S]VGA Video Card

LOCATION   TDM?   INTR   IOADDR    RAMADDR   DMA   PORT        SCSI ID
--------   ----   ----  --------  ---------  ---  ----------  ----------
 ISA11                       3b0    a0000



Device Name:             RMB_M
Device Description:      Remote Maintenance Board with modem interface

LOCATION   TDM?   INTR   IOADDR    RAMADDR   DMA   PORT        SCSI ID
--------   ----   ----  --------  ---------  ---  ----------  ----------
 ISA9                 3       180    d1000
```

Figure A-8. Partial System Configuration Table Screen

5. Use the ▲ up arrow and ▼ down arrow keys to move through the screen.

Viewing an Unsuccessful Configuration

To view an unsuccessful system configuration, do the following:

1. Enter **show_config fail**

   The system displays the following message:

   `Using /vs/data/fail_data as configuration data input file. Output file is./failed_config`

   `Configuration has been written to the "./failed_config"`

2. Enter **vi ./failed_config**

   The system displays a System Configuration Table screen similar to the one shown in Figure A-8. Asterisks (*) next to any field value indicate an unresolved resource conflict.

3. Use the ▲ up arrow and ▼ down arrow keys to move through the screen.

Viewing a Dated Configuration

- Show a dated configuration

  You can also use **show_config** to view a previous configuration file saved by the configure program. To do this, type the command with a file name argument (for example, **show_config /vs/data/conf_*MMDDYY***). This command line expands the contents of the **conf_*MMDDYY*** file (if it exists) and prints its output to the screen. The program prompts you for an output file name so as to specify the output to this file rather than to the **./configuration** file.

To view a dated system configuration, do the following:

1. Enter **show_config /vs/data/conf_MMDDYY**

   where *MMDDYY* is the month, day, and year of the configuration you want to view.

   The system displays the following message:

   ```
   Using /vs/data/conf_MMDDYY as configuration data input
   file.
   ```

   ```
   Please specify full path name of output file for this
   configuration:
   ```

2. Enter ***pathname/fn***

   where *pathname* is the file location and *fn* is the filename.

   The system displays the following message:

   ```
   Configuration has been written to the “pathname/fn”
   file.
   ```

3. Enter **vi *pathname/fn***

   where *pathname* is the file location and *fn* is the filename from the previous step.

   The system displays a System Configuration Table screen similar to the one shown in Figure A-8.

4. Use the ▲ up arrow and ▼ down arrow keys to move through the screen.

Comparing a Configuration

The hardware configuration checker verifies that the device configuration information associated with the hardware resource allocator is consistent with the actual system device configuration. To verify the configuration, do the following:

1. Enter **hconchk**

   The system displays the following message:

   ```
   hconchk: The hardware configuration check is complete.
   ```

If you receive any other error message or warning see *INTUITY CONVERSANT System Version 6.0 Alarms and Log Messages*.

Presetting Hardware Resources

The preset option allows you to preset the resources used for a particular card. This makes the card compatible and interchangeable with any of your application setups. The purpose of this option is to give you the flexibility to use your hardware with more than one application. You may want to preset certain resources of a single new device being selected for a configuration (for example, to force the configure program to select interrupt 6 for a particular device being specified).

If you have preset hardware resources, the INTUITY CONVERSANT Hardware Resource Allocator makes one attempt at configuration. If this attempt is successful, the program terminates normally. A second attempt is not performed.

Use the following procedure to preset resources:

1. When you specify a single device, the system displays the following prompt:

   ```
   Do you wish to preset any hardware options of <device
   name>? [y|(n)]
   ```

2. Press **y**

   The system asks you to select a value for the following parameters (where applicable):

   - IRQ
   - I/O address
   - RAM address
   - DMA address

   When you have entered all applicable presets, the system displays the following message:

   ```
   Press Enter to continue...
   ```

3. Press (ENTER).

   The system displays the following message:

   ```
   1 XXX device(s) added.
   Press Enter to continue...
   ```

4. Press (ENTER).

   The system displays the Device Menu screen (Figure A-7).

5. Enter **hconchk**

   The system displays the following message:

```
hconchk: The hardware configuration check is complete.
```

Configuration Device Data

The **deviceData** file stores the devices and the attributes for creating a configuration. In most cases, you will not work with this file. Your only option is the **show_devices** command. This command displays and prints to a file all devices and their attributes as represented in the **deviceData** file.

CAUTION:
Do not alter this file.

The show_devices Command

The **show_devices** command uncompresses the database of devices and their attributes contained in the **deviceData** file and displays the information on the screen. At the same time, it creates a **./devices** file so that you can send this information to a printer.

If a **./devices** file already exists, you are prompted as to whether it is acceptable to overwrite the existing file.

Component Ordering Numbers

B

Component Ordering Numbers

Table B-1. Component Ordering Numbers

Basic Component Description	Order Number
Adapter, 356A	104158829
Adapter, 356B	105197297
Adapter, electrical, DCE female	407345776
Adapter, electrical, DCE male (wyse trm, prntrs)	407050111
Adapter, electrical, DTE female	407345768
Adapter, electrical, DTE male (modems)	407050095
Adapter, electrical, jack to jack	407005255
Adapter, electrical, external SCSI	407524073
Adapter, SCSI, 68-50 pin, F/F, custom label	407846229
Adapter, T1-to-551 Paradyne CSU	407665884
Backplane, hard disk drives	407869908
Backplane, 20-slot	407869924
Backplane, power supply	407872829
Board assembly, PCA console interface	407872837

Continued on next page

Table B-1. Component Ordering Numbers — *Continued*

Basic Component Description	Order Number
Board assembly, alarm card	407869890
Bracket, cable	406667519
Brackets, PC filter (20)	406798686
Cable assembly kit, hard disk	406664912
Cable assembly, 15-position, TDM bus	601386915
Cable assembly, 15-position, TDM bus	601412927
Cable assembly, 386 keyboard/reset	601436066
Cable assembly, 486 keyboard adapter	601436082
Cable assembly, 486 reset	601436090
Cable assembly, audio input/output	407667757
Cable assembly, bus activity (P5, 100-PCI)	601818206
Cable assembly, bus activity (P5, 100-ISA)	601818214
Cable assembly, bus mouse (P5 MAPs)	601818222
Cable assembly, console	407868199
Cable assembly, CPU/Keyboard interface	406664938
Cable assembly, DC backplane power	407868157
Cable assembly, DC media power	407868165
Cable assembly, diskette drive	407868116
Cable assembly, disk power	406664946
Cable assembly, drive bay DC power	407868173
Cable assembly, E1 M/M, 25 ft (BNC Coaxial)	407615285
Cable assembly, E1 M/M, 75 ft (BNC Coaxial)	407615277
Cable assembly, E1/Aculab, 75 Ohm M/M	407276211
Cable assembly, E1/T1 MF crossover adapter (TwPr)	407617968
Cable assembly, E1/T1 M/M, 25 ft (TwPr)	407613983
Cable assembly, E1/T1 M/M, 75 ft (TwPr)	407613975
Cable assembly, EMI suppression (RMB)	407265529
Cable assembly, internal fan status	601436108

Continued on next page

Table B-1. Component Ordering Numbers — *Continued*

Basic Component Description	Order Number
Cable assembly, keyboard/reset	407868124
Cable assembly, M/F RS232	405119355
Cable assembly, modular T/R, 16-inch	601875040
Cable assembly, reset switch	407868181
Cable assembly, SCSI drive indicators	407868140
Cable assembly, SCSI jumper	407873660
Cable assembly, SCSI peripheral control, wide	407869601
Cable assembly, SP/CMP bus	601386923
Cable assembly, SP/CMP bus	601412828
Cable assembly, Tip/Ring trunk	601386907
Cable assembly, T1, line side adapter	601806649
Cable assembly, T1, 75 ft	601386873
Cable assembly, telephone cord, 3-ft	601448632
Cable assembly, VGA port jumper	406664979
Circuit card, 8-port asynchronous interface	406618538
Circuit card, 8-port asynchronous interface	407009046
Circuit card, companion processor (CMP)	106024151
Circuit card, companion processor (CMP)	106944960
Circuit card, CPU, P5 200 MHz processor	407877018
Circuit card, DCP, PC/PBX interface	106986870
Circuit card, E1, digital interface	106733348
Circuit card, Ethernet LAN interface, 10MB/PCI	407553254
Circuit card, fax, TR114+14L (Australia)	407334754
Circuit card, fax, TR114+14L (Australia)	407433424
Circuit card, fax, TR114+14L (Australia)	407644673
Circuit card, fax, TR114+14L (France)	407658749
Circuit card, fax, TR114+14L (Germany)	407468982
Circuit card, fax, TR114+14L (Germany)	407644681

Continued on next page

Table B-1. Component Ordering Numbers — *Continued*

Basic Component Description	Order Number
Circuit card, fax, TR114+14L (Japan)	407389659
Circuit card, fax, TR114+14L (Japan)	407644707
Circuit card, fax, TR114+14L (Netherlands)	407455484
Circuit card, fax, TR114+14L (Netherlands)	407644715
Circuit card, fax, TR114+14L (Spain)	407658731
Circuit card, fax, TR114+14L (United Kingdom)	407334770
Circuit card, fax, TR114+14L (United Kingdom)	407433440
Circuit card, fax, TR114+14L (United Kingdom)	407644723
Circuit card, fax, TR114+14L (US & Canada)	407334747
Circuit card, fax, TR114+14L (US & Canada)	407433408
Circuit card, fax, TR114+14L (US & Canada)	407612126
Circuit card, fax, TR114+14L (Hong Kong)	407334762
Circuit card, fax, TR114+14L (Hong Kong)	407433432
Circuit card, fax, TR114+14L (Hong Kong)	407632421
Circuit card, fax, TR114+14L (Hong Kong)	407644699
Circuit card, fax, TR114-14L (US & Canada)	407455450
Circuit card, LAN interface	406230573
Circuit card, LAN interface	406972646
Circuit card, remote maintenance	406969238
Circuit card, Speech and Signal Processor (SSP)	107570491
Circuit card, Tip/Ring (IVC6)	106406580
Circuit card, Tip/Ring (IVC6-1A)	107213944
Circuit card, Tip/Ring (IVP4) analog interface	106024094
Circuit card, Tip/Ring (IVP4) analog interface	106769227
Circuit card, Tip/Ring (IVP6) analog interface	105732267
Circuit card, Tip/Ring (IVP6) analog interface	106430861
Circuit card, Tip/Ring (IVP6) analog interface	107213936
Circuit card, Tip/Ring (IVP6-IA) analog interface	107101164

Continued on next page

Table B-1. Component Ordering Numbers — *Continued*

Basic Component Description	Order Number
Circuit card, Tip/Ring (IVP6-ID) analog interface	107213381
Circuit card, Tip/Ring (IVP6-IU) analog interface	106560170
Circuit card, Tip/Ring, Next Generation (NGTR)	107224586
Circuit card, serial synchronous interface	406715771
Circuit card, signal processor (SP)	106406572
Circuit card, signal processor (SP)	106439839
Circuit card, starlan interface	406817999
Circuit card, synchronous host interface (FIFO/SIB)	407176601
Circuit card, synchronous interface	601824956
Circuit card, T1 digital interface	106077753
Circuit card, T1 digital interface with upgrade kit	601413172
Circuit card, token ring, Version 1	407199637
Circuit card, token ring, Version 2	407664507
Circuit card, video controller, PCI	407783620
Connector, BNC Wye LAN	405990169
Cord, 10-pin modular, 10 ft	846362705
Cord, 10-pin modular, 10 ft	846983039
Cord, 6-pin modular, 14-ft	102937604
Cord, AC power, 9-ft	406900092
Cord, AC power, Australia, 8-ft	407051630
Cord, AC power, Chile (Italy-style), 6-ft	407515196
Cord, AC power, Germany, 6-ft	407051648
Cord, AC power, India, 8-ft	407406735
Cord, AC power, Israel, 8-ft	407879790
Cord, AC power, Japan, 8-ft	407406727
Cord, AC Power, Switzerland, 8-ft	407879782
Cord, AC power, United Kingdom, 6-ft	406999243
Cord, power, monitor (PC style)	407115591

Continued on next page

Table B-1. Component Ordering Numbers — *Continued*

Basic Component Description	Order Number
Cord, power, monitor (wall outlet)	406666263
Cord, telephone, 25-ft	103623195
Cord, telephone, DW8A-SE, 25 ft	103848800
Coupler, E1, F/F (BNC Coaxial)	407617901
Disk drive, floppy, 1.44-Mbyte	406664573
Disk drive, floppy, 1.44-Mbyte	406832584
Disk drive, hard, SCSI, 2.0-Gbyte	407876358
Fan, 2-unit module	407869916
Filter, air, bezel, rack door	407869874
Filter, air, bezel, rack inlay	407869882
Filter, air, bezel, tower door	407869866
Fuse and holder, 110V/60Hz	407876341
Fuse and holder, 220V/50Hz	407876333
IC, 16-Mbyte SIMM	407701747
IC, 32-Mbyte SIMM	407700285
Keyboard (GIS gray)	407104066
Main power distribution board	406798231
Module, voice workstation	601459621
Monitor, color, VGA	407773316
Mouse, serial	407050970
Mouse, serial	407176593
Power supply 430W	407858976
Resistor SIP, TDM terminator	403789167
Switch, power	407870476
Tape drive, SCSI streaming, 2-Gbyte	407334507
Terminator, single-ended active, SCSI	407874429
Toroid, ring type	405853458
Toroid, split type	407616846

How to Build a System Using This Book

C

Checklist for Building a System

The following checklist assumes that you are starting with a MAP/100P shell which has only the power supply and the backplanes.

If your system does not have a power supply or a 12-slot backplane included, see Chapter 7, "Replacing Other Components", for the installation procedures.

Task	Description	Comments	Refer to	Done
1	Acquire all of the components necessary to build your system.		Appendix B, "Component Ordering Numbers"	
2	Determine the slot and bay locations for the equipment.		Appendix A, "System Configuration"	
3	Install the hard disk drive(s).		Chapter 6, "Replacing the Hard Disk Drive"	
4	Install the tape drive.		Chapter 7, "Replacing Other Components"	
5	Install the diskette drive.		Chapter 7, "Replacing Other Components"	

Task	Description	Comments	Refer to	Done
6	Install the circuit cards.		Chapter 5, "Replacing, Installing, or Upgrading Circuit Cards"	
7	Apply power to the unit.		Chapter 4, "Getting Inside the Computer"	
8	Install the base system software.		Chapter 8, "Installing Base System Software"	
9	Install the INTUITY system software.		Chapter 9, "Installing the INTUITY CONVERSANT System Software"	
10	Install the UNIX multi-user software.	This is an optional feature software.	Chapter 10, "Installing the Optional Feature Software"	

Disaster Recovery Checklists

D

Disaster Recovery Checklists

The following checklists are included in this section:

- Checklist for Software Reloading on Nonmirrored INTUITY CONVERSANT Systems with Existing Hard Disk Drives
- Checklist for INTUITY CONVERSANT Systems with All New Hard Disk Drives
- Checklist for Nonmirrored INTUITY CONVERSANT Systems With a New Hard Disk Drive 0 and Other Existing Hard Disk Drives
- Checklist for Nonmirrored INTUITY CONVERSANT Systems with a New Hard Disk Drive, Other than Hard Disk Drive 0
- Checklist for Mirrored INTUITY CONVERSANT Systems with a New Hard Disk Drive 0 and Other Existing Hard Disk Drives
- Checklist for Mirrored INTUITY CONVERSANT Systems with a New Hard Disk Drive, Other than Hard Disk Drive 0

Checklist for Software Reloading on Nonmirrored INTUITY CONVERSANT Systems with Existing Hard Disk Drives

The procedures in this checklist should be conducted when your INTUITY CONVERSANT system experiences a software disaster. This checklist should not be used if hard disk drives are being replaced.

Table D-1. Checklist for Software Reloading for Nonmirrored INTUITY CONVERSANT Systems with Existing Hard Disk Drives

✓	Task	Reference Documentation
	Locate the most recent **mkimage** backup tape. You will also need to use any **spres** backup tape which has been created.	
	Shutdown the INTUITY CONVERSANT system.	"Shutting Down the Operating System," in Chapter 3, "Common System Procedures".
	Leave all hard disks connected to the SCSI bus.	
	Restore the system using the **mkimage** backup tape.	"Performing a System Restoration," in Chapter 3, "Common System Procedures".
	Restore any speech files using the **spres** backup tape.	*INTUITY CONVERSANT System Version 6.0 Speech Development, Processing, and Recognition*, 585-310-762

Checklist for INTUITY CONVERSANT Systems with All New Hard Disk Drives

The procedures in this checklist should be conducted when you are replacing both hard disk drives on your INTUITY CONVERSANT system. There are no provisions in this checklist for recovering existing file system. As a result, this checklist should not be used if either hard disk drive has been previously used in your INTUITY CONVERSANT system.

Table D-2. Checklist for INTUITY CONVERSANT Systems with New Hard Disk Drives 0 and 1

✓	Task	Reference Documentation
	Locate the most recent **mkimage** backup tape. You will also need to use any **spres** backup tape which has been created.	
	Replace the hard disk(s).	"Hardware Procedures for Replacing a Hard Disk Drive," in Chapter 6, "Replacing the Hard Disk Drive".
	Restore the system using the **mkimage** backup tape.	"Performing a System Restoration," in Chapter 3, "Common System Procedures".
	Restore any speech files using the **spres** backup tape.	*INTUITY CONVERSANT System Version 6.0 Speech Development, Processing, and Recognition*, 585-310-762

Checklist for Nonmirrored INTUITY CONVERSANT Systems with a New Hard Disk Drive 0 and Other Existing Hard Disk Drives

The procedures in this checklist should be conducted on a two disk nonmirrored INTUITY CONVERSANT system in which Hard Disk Drive 0 has failed. This checklist should not be used another hard disk drive has also failed.

Table D-3. Checklist for Nonmirrored INTUITY CONVERSANT Systems with a New Hard Disk Drive 0 and Other Existing Hard Disk Drives

✓	Task	Reference Documentation
	Locate the most recent **mkimage** backup tape. You will also need to use any **spres** backup tape which has been created.	
	Replace the hard disk drive.	"Hardware Procedures for Replacing a Hard Disk Drive," in Chapter 6, "Replacing the Hard Disk Drive".
	Restore the system using the **mkimage** backup tape.	"Performing a System Restoration," in Chapter 3, "Common System Procedures".
	Restore any speech files using the **spres** backup tape.	*INTUITY CONVERSANT System Version 6.0 Speech Development, Processing, and Recognition*, 585-310-762

Checklist for Nonmirrored INTUITY CONVERSANT Systems with a New Hard Disk Drive, Other than Hard Disk Drive 0

The procedures in this checklist should be conducted on a two disk nonmirrored INTUITY CONVERSANT system in which a hard disk drive, other than Hard Disk Drive 0 has failed.

Table 4-4. Checklist for Nonmirrored INTUITY CONVERSANT Systems with a New Hard Disk Drive, Other than Hard Disk Drive 0

✓	Task	Reference Documentation
	Locate the most recent **mkimage** backup tape. You will also need to use any **spres** backup tape which has been created.	
	Replace the hard disk drive.	"Hardware Procedures for Replacing a Hard Disk Drive," in Chapter 6, "Replacing the Hard Disk Drive".
	Remove, for replacement, the old Hard Disk Drive 1 using the Veritas screens.	"Replacing a Hard Disk Drive other than Drive 0," in Chapter 6, "Replacing the Hard Disk Drive".
	Add the new Hard Disk Drive 1, using the Veritas screens.	"Adding a Hard Disk Drive to a System for Speech Storage," in Chapter 6, "Replacing the Hard Disk Drive".

Continued on next page

Table 4-4. Checklist for Nonmirrored INTUITY CONVERSANT Systems with a New Hard Disk Drive, Other than Hard Disk Drive 0 — *Continued*

✓	Task	Reference Documentation
	Initialize the new Hard Disk Drive 1 as a speech drive.	"Adding a Hard Disk Drive to a System for Speech Storage," in Chapter 6, "Replacing the Hard Disk Drive".
	Exit the Veritas screens.	"Adding a Hard Disk Drive to a System for Speech Storage," in Chapter 6, "Replacing the Hard Disk Drive".
	Restore any speech files using the **spres** backup tape.	*INTUITY CONVERSANT System Version 6.0 Speech Development, Processing, and Recognition*, 585-310-762

Checklist for Mirrored INTUITY CONVERSANT Systems with a New Hard Disk Drive 0 and Other Existing Hard Disk Drives

The procedures in this checklist should be conducted on a two disk mirrored INTUITY CONVERSANT system in which Hard Disk Drive 0 has failed. This checklist should not be used another hard disk drive has also failed.

Table D-5. Checklist for Mirrored INTUITY CONVERSANT Systems with a New Hard Disk Drive 0 and Other Existing Hard Disk Drives

✓	Task	Reference Documentation
	Remove the Hard Disk Drive 0 from the MAP/100P.	"Hardware Procedures for Replacing a Hard Disk Drive," in Chapter 6, "Replacing the Hard Disk Drive".
	Remove Hard Disk Drive 0 from the hard disk drive bracket.	"Hardware Procedures for Replacing a Hard Disk Drive," in Chapter 6, "Replacing the Hard Disk Drive".
	Secure the new hard disk drive to the hard disk drive bracket.	"Hardware Procedures for Replacing a Hard Disk Drive," in Chapter 6, "Replacing the Hard Disk Drive".
	Remove Hard Disk Drive 1 from the MAP/100P.	"Hardware Procedures for Replacing a Hard Disk Drive," in Chapter 6, "Replacing the Hard Disk Drive".

Continued on next page

Table D-5. Checklist for Mirrored INTUITY CONVERSANT Systems with a New Hard Disk Drive 0 and Other Existing Hard Disk Drives — *Continued*

✓	Task	Reference Documentation
	Place the former Hard Disk Drive 1 in Hard Disk Drive Bay 0. **NOTE:** This is the hard disk drive bay for Hard Disk Drive 0.	"Hardware Procedures for Replacing a Hard Disk Drive," in Chapter 6, "Replacing the Hard Disk Drive".
	Place the new hard disk drive in Hard Disk Drive Bay 1.	"Hardware Procedures for Replacing a Hard Disk Drive," in Chapter 6, "Replacing the Hard Disk Drive".
	Reboot the system.	"Rebooting the UNIX System," in Chapter 3, "Common System Procedures".

Checklist for Mirrored INTUITY CONVERSANT Systems with a New Hard Disk Drive, Other than Hard Disk Drive 0

The procedures in this checklist should be conducted on a two disk mirrored INTUITY CONVERSANT system in which a hard disk drive other than Hard Disk Drive 0 has failed.

Table D-6. Checklist for Mirrored INTUITY CONVERSANT Systems with a New Hard Disk Drive, Other than Hard Disk Drive 0

✓	Task	Reference Documentation
	Replace the hard disk drive.	"Hardware Procedures for Replacing a Hard Disk Drive," in Chapter 6, "Replacing the Hard Disk Drive","
	Remove, for replacement, the old Hard Disk Drive 1 using the Veritas screens.	"Software and Hardware Procedures for Replacing a Hard Disk Drive (Mirrored System)," in Chapter 6, "Replacing the Hard Disk Drive","
	Replace the old Hard Disk Drive 1 with the new Hard Disk Drive 1, using the Veritas screens.	"Software and Hardware Procedures for Replacing a Hard Disk Drive (Mirrored System)," in Chapter 6, "Replacing the Hard Disk Drive","
	Create a partition on Hard Disk Drive 1 using the Veritas screens.	"Software and Hardware Procedures for Replacing a Hard Disk Drive (Mirrored System)," in Chapter 6, "Replacing the Hard Disk Drive","
	Exit the Veritas screens.	"Software and Hardware Procedures for Replacing a Hard Disk Drive (Mirrored System)," in Chapter 6, "Replacing the Hard Disk Drive","

Glossary

Numerics

23B+D
23 bearer (communication) and 1 data (signaling) channel on a T1 PRI circuit card.

30B+D
30 bearer (communication) and 1 data (signaling) channel (plus framing channel 0) on an E1 PRI circuit card.

3270 interface
A link between one or more INTUITY™ CONVERSANT® machines and a host mainframe. In INTUITY CONVERSANT system documentation, the 3270 interface specifically means the link between one or more system machines and an IBM host mainframe.

47B+D
47 bearer (communication) and 1 data (signaling) channel on two T1 PRI circuit cards.

4ESS®
A large Lucent central office switch used to route calls through the telephone network.

A

AC
alternating current

ACD
automatic call distributor

AD
application dispatch

AD-API
application dispatch application programming interface

adaptive differential pulse code modulation
A means of encoding analog voice signals into digital signals by adaptively predicting future encoded voice signals. This adaptive modulation method reduces the number of bits required to encode voice. See also “pulse code modulation.”

adjunct products
Products (for example, the Adjunct/Switch Application Interface) that the INTUITY system administers via cut-through access to the inherent management capabilities of the product itself; this is in opposition to the ability of the INTUITY CONVERSANT system to administer the switch directly.

Adjunct/Switch Application Interface
An optional feature package that provides an Integrated Services Digital Network-based interface between Lucent Technologies PBXs and adjunct processors.

ADPCM
adaptive differential pulse code modulation

ADU
asynchronous data unit

advanced speech recognition
A speech recognition ability that allows the system to understand WholeWord and FlexWord® inputs from callers.

affiliate
A business organization that Lucent controls or with which Lucent is in partnership.

AGL
application generation language

alarm relay unit
A unit used in central office telecommunication arrangements that transmits warning indicators from telephone communications equipment (such as an INTUITY CONVERSANT system) to audio.

ALERT
System alerter process

alerter
A system process that responds to patterns of events logged by the “logdaemon” process.

American Standard Code for Information Interchange
A standard code for data representation that represents alphanumeric characters as binary numbers. The code includes 128 upper- and lowercase letters, numerals, and special characters. Each alphanumeric and special character has an ASCII code (binary) equivalent that is 1 byte long.

analog
An analog signal, such as voice or music, that varies in a continuous manner. An analog signal may be contrasted with a digital signal, which represents only discrete states.

ANI
automatic number identification

announcement
A message the system plays to the caller to provide information. The caller is not asked to give a response. Compare to “prompt.”

API
Application programming interface

application
The automated transaction (interactions) among the caller, the voice response system, and any databases or host computers required for your business. See also “application script.”

application administration
The component of the INTUITY CONVERSANT system that provides access to the applications currently available on your system and helps you to manage and administer them.

application installation
A two-step process in which the INTUITY CONVERSANT system invokes the TSM script assembler for the specific application name and moves files to the appropriate directories.

application script
The computer program that controls the application (the transaction between the caller and the system). The INTUITY CONVERSANT system provides several methods for creating application scripts, including Graphical Designer, Script Builder, Transaction Assembler Script (TAS) language, and the Intuity Response Application Programming Interface (IRAPI).

application verification
A process in which the INTUITY CONVERSANT system verifies that all the components needed by an application are complete.

ASCII
American Standard Code for Information Interchange

ASI
analog switch integration

ASR
advanced speech recognition

asynchronous communication
A method of data transmission in which bits or characters are sent at irregular intervals and spaced by start and stop bits rather than by time. Compare to "synchronous communication."

asynchronous data unit
An electronic communications device that allows computer systems to communicate over asynchronous lines more than 50 feet (15 m) in length.

automatic call distributor
That part of a telephone system that recognizes and answers incoming calls and completes these calls based on a set of instructions contained in a database. The ACD can send the call to an operator or group of operators as soon as the operator has completed a previous call or after the system has played a message to the caller.

automatic number identification
A method of identifying the calling party by automatically receiving a string of digits that identifies the calling station of a particular customer.

AYC2C
The signal processor (SP) circuit card.

AYC3B
A T1 (digital) circuit card.

AYC5B
The IVP6 Tip/Ring (analog) circuit card.

AYC6B
The IVP4 Tip/Ring (analog) circuit card.

AYC7
The companion (CMP) circuit card.

AYC9
The Text-to-Speech circuit card.

AYC10
The IVC6 Tip/Ring (analog) circuit card.

AYC11
A T1 (digital) circuit card.

AYC16
The IVP6-IU Tip/Ring (analog) circuit card.

AYC21
The E1/T1 (digital) circuit card.

AYC26
The IVP6-IA Tip/Ring (analog) circuit card.

AYC27
The IVP6-ID Tip/Ring (analog) circuit card.

AYC28
The IVP6 Tip/Ring (analog) circuit card.

AYC30
The NGTR (analog) circuit card.

AYC43
The speech and signal processor (SSP) circuit card.

B

back up
The preservation of the information in a file in a different location, so that the data is not lost in the event of hardware or system failure.

backing up an application
Using a utility that makes an archive copy of a completed application or an interim copy of an application in progress. The back-up copy can be restored to the system if the on-line version is damaged, or if you make revisions and want to go back to the previous version.

barge-in
A capability provided by WholeWord speech recognition and Dial Pulse Recognition (DPR) that allows callers to speak or enter their responses during the prompt and have those responses recognized (similar to the Speak with Interrupt capability). See also “echo cancellation.”

batch file
A file containing one or more lines, each of which is a command executable by the UNIX shell.

BB
bulletin board

binary synchronous communications
A character-oriented synchronous link protocol.

blind transfer protocol
A protocol in which a call is completed as soon as the extension is dialed, without having to wait to see if the telephone is busy or if the caller answered.

bps
bits per second

BRDG
call bridging process

bridging
The process of connecting one telephone network connection to another over the INTUITY CONVERSANT system TDM bus. Bridging decreases the processing load on the system since an active bridge does not require speech processing, database access, host activity, etc., for the transaction.

BSC
binary synchronous communications

bundle
In the context of the Enhanced File Transfer package, this term is used to denote a single file, a group of files (package), or a combination of both.

byte
A unit of storage in the computer. On many systems, a byte is 8 bits (binary digits), which is the equivalent of one character of text.

C

call classification analysis
A process that enables application designers to use information available within the system to classify the disposition of originated and transferred calls. Intelligent CCA is provided with the system. Full CCA is an optional feature package.

call data event
A parameter that specifies a list of variables that are appended to a call data record at the end of each call.

call data handler process
A software process that accumulates generic call statistics and application events.

called party number
The number dialed by the person making a telephone call. Telephone switching equipment can use this number to selectively route an incoming call to a particular department or agent.

caller
The party who calls for a service, gets connected to the INTUITY CONVERSANT system, and interacts with it. As the INTUITY CONVERSANT system can also make outbound calls for service, the caller can also be the person who responds to those outbound calls.

call progress tones
Standard telephony sounds that indicate the status of the call. These sounds include busy, fast busy, ringback, reorder, etc.

card cage
An area within a INTUITY CONVERSANT system platform that contains and secures all of the standard and optional circuit cards used in the system.

cartridge tape drive
A high-capacity data storage/retrieval device that can be used to transfer large amounts of information onto high-density magnetic cartridge tape based on a predetermined format. This tape can be removed from the system and stored as a backup, or used on another system.

CAS
channel associated signalling

caution
An admonishment or advisory statement used in INTUITY CONVERSANT system documentation to alert the user to the possibility of a service interruption or a loss of data.

CCA
call classification analysis

CDH
call data handler process

CELP
code excited linear prediction

central office
An office or location in which large telecommunication devices such as telephone switches and network access facilities are maintained. These locations follow strict installation and operation requirements.

central processing unit
See "processor."

CGEN
Voice system general message class

channel
See "port."

channel associated signaling
A type of signaling that can be used on E1 circuit cards. It occurs on channel 16.

CICS
Customer Information Control System

circuit card upgrade
A new circuit card that replaces an existing card in the platform. Usually the replacement is an updated version of the original circuit card to replace technology made obsolete by industry trends or a new system release.

cluster controller
A bisynchronous interface that provides a means of handling remote communication processing.

CMS
Call Management System

CO
central office

code excited linear prediction
A means of encoding analog voice signals into digital signals that provides excellent quality with use of minimum disk space.

command
An instruction or request the user issues to the system software to make the system perform a particular function. An entire command consists of the command name and options.

configuration
The arrangement of the software and hardware of a computer system or network. The INTUITY CONVERSANT system configuration includes either a standard or custom processor, peripheral equipment (for example, printers and modems), and software applications. Configuration also refers to the way the switch network is set up; that is, the types of products that are in the network and how those products communicate.

configuration management
The component of the system that allows you to manage the current configuration of voice channels, host sessions, and database connections, assign scripts to run on specific voice channels or host sessions, assign functionality to SSP and E1/T1 circuit cards, and perform various maintenance functions.

connect and disconnect (C and D) tones
DTMF tones that inform the system when the attendant has been connected (C) and when the caller has been disconnected (D).

connected digits
A sequence of digits that the system can process as a group, rather than requiring the caller to enter the digits one at a time.

Converse Data Return (conv_data)
A Script Builder action that supports the DEFINITY® call vectoring (routing) feature by enabling the switch to retain control of vector processing in the system environment. It supports the DEFINITY "converse" vector command to establish a two-way routing mechanism between the switch and the system to facilitate data passing and return.

controller circuit card
A circuit card used on a computer system that controls its basic functionality and makes the system operational. These circuit cards are used to control magnetic peripherals, video monitors, and basic system communications.

copying an application
A utility in which information from a source application is directed into the destination application.

coresidency
The ability of two products or services to operate and interact with each other on a single hardware platform. An example of this is the use of an INTUITY CONVERSANT system along with a package from a different vendor on the same system platform.

CPE
customer provided equipment or customer premise equipment

CPN
called party number

CPT
call progress tones

CPU
central processing unit

crash
An interactive utility for examining the operating system core and for determining if system parameters are being exceeded.

CSU
channel service unit

custom speech
Unique words or phrases to be used in INTUITY CONVERSANT system voice prompts that Lucent Technologies custom records on a per-customer basis.

custom vocabulary
A specialized package of unique words or phrases created on a per-customer basis and used by WholeWord or FlexWord speech recognition.

Customer Information Control System
Part of the operating system that manages resources for running applications (for example, IND$FILE). Note that TSO and CMS provide analogous functionality in other host environments.

CVS
converse vector step

D

danger
An admonishment or advisory statement used in INTUITY CONVERSANT system documentation to alert the user to the possibility of personal injury or death.

data interface process
A software process that communicates with Script Builder applications.

database
A structured set of files, records, or tables.

database field
A field used to extract values from a local database and form the structure upon which a database is built.

database record
The information in a database for a person, product, event, etc. The database record is made up of individual fields for each information item.

database table
A structure, made up of columns and rows, that holds information in a database. Database tables provide a means of storing information that changes too often to “hard-code,” or store permanently, in the transaction outline.

dB
decibel

DB
database

DBC
database checking process

DBMS
database management system

DC
direct current

DCE
data communications equipment

DCP
digital communications protocol

debug
The process of locating and correcting errors in computer programs; also referred to as "troubleshooting."

default
The way a computer performs a task in the absence of other instructions.

default owner
The owner of a channel when no process takes ownership of that channel. The default owner holds all idle, in-service channels. In terms of the IRAPI, this is typically the Application Dispatch process.

diagnose
The process of performing diagnostics on a bus or on Tip/Ring, E1/T1, or SSP circuit cards.

dial ahead
The ability to collect and process touch-tone inputs in sequence, even when they are received before the prompts.

dial pulse recognition
A method of recognizing caller pulse inputs from a rotary telephone.

dialed number identification service
A service that allows incoming calls to contain information about the telephone number for which it is destined.

dial through
A capability provided by touch-tone and dial pulse recognition that allows callers to enter their responses during the prompt and have those responses recognized (similar to the Speak with Interrupt capability). See also "barge-in" and "echo cancellation".

dictionary
A reference book containing an alphabetical list of words, with information given for each word including meaning, pronunciation, and etymology.

DIMM
dual in-line memory module

DIO
disk input and output process

DIP
data interface process

directory
A type of file used to group and organize other files or directories.

display errdata
A command that displays system errors sent to the logger.

DMA
direct memory address

DNIS
dialed number identification service

DPR
dial pulse recognition

DSP
digital signal processor

DTE
data terminal equipment

DTMF
dual tone multi-frequency

DTR
data terminal ready

dual 3270 links
A feature that provides an additional physical unit (PU) for a cost-effective means of connecting to two host computers. The customer can connect a system to two separate FEPs or to a single FEP shared by one or more host computers. Each link supports a maximum of 32 LUs.

dual tone multi-frequency
A touch-tone sound that is an audio signal including two different frequencies. *DTMF feedback* is the process of the "switch" providing this information to the system. *DTMF muting* is the process of ignoring these tones (which might be simulated by human speech) when they are not needed for the application.

dump space
An area of the disk that is fixed in size and should equal the amount of RAM on the system. The operating system "dumps" an image of core memory when the system crashes. The dump can be fetched after rebooting to help in analyzing the cause of the crash.

E

E&M
Ear and Mouth

E1 / T1
Digital telephony interfaces, commonly called *trunks*. E1 is an international standard at 2.048 Mbps. T1 is a North American standard at 1.544 Mbps.

Ear and Mouth
A common T1 trunking protocol for connection between two "switches."

EBCDIC
Extended Binary Coded Decimal Interexchange Code

echo cancellation
The process of making the channel quiet enough so that the system can hear and recognize WholeWord and dial pulse inputs during the prompt. See also "barge-in."

ECS
Enterprise Communications Server

editor system
A system that allows speech phrases to be displayed and edited by a user. See "Graphical Speech Editor."

EFT
Enhanced File Transfer

EIA
Electronic Industries Association

EISA
Extended Industry Standard Architecture

EMI
electromagnetic interference

Enhanced Basic Speech
Pre-recorded speech available from Lucent Technologies in several languages. Sometimes called "standard speech."

Enhanced File Transfer
A feature that allows the transferring of files automatically between the INTUITY CONVERSANT system and a synchronous host processor on a designated logical unit.

Enhanced Serial Data Interface
A software- and hardware-controlled method used to store data on magnetic peripherals.

Enterprise Communications Server
The telephony equipment that connects your business to the telephone network. Sometimes called a "switch."

error message
A message on the screen indicating that something is wrong with a possible suggestion of how to correct it.

ESD
electrostatic discharge

ESDI
Enhanced Serial Data Interface

ESS
electronic switching system

EST
Enhanced Software Technologies, Inc.

ET
error tracker

Ethernet
A name for a local area network that uses 10BASE5 or 10BASE2 coaxial cable and InterLAN signaling techniques.

event
The notification given to an application when some condition occurs that is generally not encountered in normal operation.

EXTA
external alarms feature message class

external actions
Specific predefined system tasks that Graphical Designer or Script Builder can call or *invoke* to interact with other products or services. When an external action is invoked, the systems displays a form that provides choices in each field for the application developer to select. Examples are Call_Bridge, Make_Call, SP_Allocate, SR_Prompt, etc.

external functions
Specific predefined (or customer-created) system tasks that can Graphical Designer or Script Builder can call or *invoke* to interact with other products or services. The function allows the application developer to enter the argument(s) for the function to act on (they are not provided in a choices list). Examples are concat, getarg, length, substring, etc.

F

FAX Actions
An optional feature package that allows the system to send fax messages.

FCC
Federal Communications Commission

FDD
floppy disk drive

feature
A function or capability of a product or an application within the INTUITY CONVERSANT system.

feature package
An optional package that may contain both hardware and software resources to provide additional functionality to a standard system.

feature_tst script package
A standard INTUITY CONVERSANT system software program that allows a user to perform self-tests of critical hardware and software functionality.

FEP
front end processor

FFE
Form Filler Plus feature message class

field
See “database field.”

FIFO
first-in-first-out processing order

file
A collection of data treated as a basic unit of storage.

file transfer
An option that allows you to transfer files interactively or directly to and from UNIX using the file transfer system (FTS).

filename
Alphabetic characters used to identify a particular file.

FlexWord™ speech recognition
A type of speech recognition based on subword technology that recognizes phonemes or parts of words in a specific language. See also "subword technology."

foos
facility out-of-service state

Form Filler Plus
An optional feature package that provides the capability for application scripts to record a caller's responses to prompts for later transcription and review.

FTS
file transfer process message class

Full CCA
A feature package that augments the types of call dispositions that Intelligent CCA can provide.

function key
A key, labeled F1 through F8, on your keyboard to which the INTUITY CONVERSANT system software gives special properties for manipulating the user interface.

G

GEN
PRISM logger and alerter general message class

grammar
The inputs that a recognizer can match (identify) from a caller.

Graphical Speech Editor
A window-driven, X Windows/Motif based, graphical user interface (GUI) that can be accessed to perform different functions associated with the creation and editing of speech files for applications.

Graphical Designer
An optional software package that provides a graphical interface to assist in development of voice response applications on the INTUITY CONVERSANT system (see also "Script Builder").

GSE
Graphical Speech Editor

GUI
graphical user interface

H

hard disk drive
A high-capacity data storage/retrieval device that is located inside a computer platform. A hard disk drive stores data on nonremovable high-density magnetic media based on a predetermined format for retrieval by the system at a later date.

hardware
The physical components of a computer system. The central processing unit, disks, tape, and floppy drives, etc., are all hardware.

Hardware Resource Allocator
A software program that resolves or blocks the allocation of CPU and memory resources for controlling and optional circuit cards.

hardware upgrade
Replacement of one or more fundamental platform hardware components (for example, the CPU or hard disk drive), while the existing platform and other existing optional circuit cards remain.

HDD
hard disk drive

High Level Language Applications Programming Interface
An application programming interface that allows a user to write custom applications that can communicate with a host computer via an API.

HLLAPI
High Level Language Applications Programming Interface

HOST
host interface process message class

host computer
A computer linked to a network to provide a range of services, such as database access and computation. The host computer operates in a time-sharing manner with other computers linked to it via the network.

hwoos
hardware out-of-service state

Hz
Hertz

I

IBM
International Business Machines

iCk or ICK
The system integrity checking process.

ID
identification

IDE
integrated disk electronics

idle channel
A channel that either has no owner or is owned by its default owner and is onhook.

IE
information element

IND$FILE
The standard SNA file transfer utility that runs as an application under CICS, TSO, and CMS. IND$FILE is independent of link-level protocols such as BISYNC and SDLC.

independent software vendor
A company that has an agreement with Lucent Technologies to develop software to work with the INTUITY CONVERSANT system to provide additional features required by customers.

indexed table
A table that, unlike a nonindexed table, can be searched via a field name that has been indexed.

industry standard architecture
A PC bus standard that allows processors and other circuit cards to communicate with each other.

INIT
voice system initialization message class

initialize
To start up the system for the first time.

inserv
in-service state

Integrated Services Digital Network
A network that provides end-to-end digital connectivity to support a wide range of voice and data services.

Integrated Voice Processing (IVP) circuit card
The IVP4 or IVP6 circuit card that provides Tip/Ring connections. The NGTR (AYC30) card also provides the same functions.

intelligent CCA
Monitoring the line after dialing is complete to determine whether a busy, reorder (fast busy), or other failure has been encountered. It also recognizes when the extension is answered or if the extension is not answered after a specified number of rings. The monitoring capabilities are dependent on the network interface circuit card and protocol used

interface
The access point of a system. With respect to the INTUITY CONVERSANT system, the interface is designed to provide you with easy access to the software capabilities.

interrupt
The termination of voice and/or telephony functions when some condition occurs.

INTUITY Response Application Programming Interface
A library of commands that provide a standard development interface for voice-telephony applications.

IPC
interprocess communication

IPC
intelligent ports card (IPC-900)

IPCI
integrated personal computer interface

IRAPI
Intuity Response Application Programming Interface

IRQ
interrupt request

ISA
industry standard architecture

ISDN
Integrated Services Digital Network

ISV
independent software vendor

ITAC
International Technical Assistance Center

IVC6 circuit card (AYC10)
A Tip/Ring (analog) circuit card with six channels.

IVP4 circuit card (AYC6 or AYC6B)
A Tip/Ring (analog) card with four channels.

IVP6 circuit card (AYC5, AYC5B, or AYC28)
A Tip/Ring (analog) card with six channels.

K

Kbps
kilobytes per second

Kbyte
kilobyte

keyboard mapping
In emulation mode, this feature enables the keyboard to send 3270 keyboard codes to the host according to a configuration table set up during installation.

keyword spotting
A capability provided by WholeWord speech recognition that allows the system to recognize a single word in the middle of an entire phrase spoken by a caller in response to a prompt.

L

LAN
local area network

LDB
local database

LED
light-emitting diode

library states
The state information about channel activities maintained by the IRAPI.

LIFO
last-in-first-out processing order

line side E1
A digital method of interfacing an INTUITY CONVERSANT system to a PBX or "switch" using E1-related hardware and software.

line side T1
A digital method of interfacing an INTUITY CONVERSANT system to a PBX or "switch" using T1-related hardware and software.

listfile
An ASCII catalog that lists the contents of one or more talkfiles. Each application script is typically associated with a separate listfile. The listfile maps speech phrase strings used by application scripts into speech phrase numbers.

local area network
A data communications network in a limited geographical area. The LAN provides communications between computers and peripherals.

local database
A database residing on the INTUITY CONVERSANT system.

LOG
INTUITY CONVERSANT system logger process message class

logical unit
A type of SNA Network Addressable Unit.

logdaemon
A UNIX system information and error logging process.

logger
See "logdaemon."

logging on/off
Entering or exiting the INTUITY CONVERSANT system software.

LSE1
line side E1

LST1
line side T1

LU
logical unit

M

magnetic peripherals
Data storage devices that use magnetic media to store information. Such devices include hard disk drives, floppy disk drives, and cartridge tape drives.

main screen
The INTUITY CONVERSANT system screen from which you are able to enter either the System Administration or Voice System Administration menu.

maintenance process
A software process that runs temporary diagnostics and maintains the state of circuit cards and channels.

manoos
manually out-of-service state

MAP/100
multi application platform 100

MAP/100C
multi application platform 100C

MAP/40
multi application platform 40

MAP/5P
multi application platform 5P

masked event
An event that an application can ignore (that is, the application can request not to be informed of the event).

master
A circuit card that provides clock information to the TDM bus.

Mbps
megabits per second

MByte
megabyte

megabyte
A unit of memory equal to 1,048,576 bytes (1024 x 1024). It is often rounded to one million.

menu
Options presented to a user on a computer screen or with voice prompts.

MF
multifrequency

MHz
megahertz

Microsoft
A manufacturer of software products, primarily for IBM-compatible computers.

mirroring
A method of data backup that allows all of the data transactions to the primary hard disk drive to be copied and maintained on a second identical drive in near real time. If the primary disk drive crashes or becomes disabled, all of the data stored on it (up to 1.2 billion bytes of information) is accessible on the second mirrored disk drive.

ms
millisecond

msec
millisecond

MS-DOS
A personal computer disk operating system developed by the Microsoft Corporation.

MTC
maintenance process

multifrequency
Dual tone digit signalling (similar to DTMF), used for trunk addressing between network switches or by network operators.

multithreaded application
A single process/application that controls several channels. Each thread of the application is managed explicitly. Typically this means state information for each thread is maintained and the state of the application on each channel is tracked.

N

NCP
Network Control Program

NEBS
Network Equipment Building Standards

NEMA
National Electrical Manufacturers Association

netoos
network out-of-service state

NetView
An optional feature package that transmits high-priority (major or critical) messages to the host as operator-generated alerts (OGAs) over the 3270 host link. The NetView Alarm feature package does not require a dedicated LU.

next generation Tip/Ring (AYC30) circuit card
An analog circuit card with six channels.

NFAS
non-facility associated signalling

NFS
network file sharing

NGTR
next generation Tip/Ring (AYC30) circuit card

NM-API
Network Management - Application Programming Interface

NMVT
network management vector transport

nonex
nonexistent state

nonindexed table
A table that can be searched only in a sequential manner and not via a field name.

nonmasked event
An event that must be sent to the application. Generally, an event is nonmaskable if the application would likely encounter state transition errors by trying to it.

NRZ
non return to zero

NRZI
non return to zero inverted

null value
An entry containing no value. A field containing a null value is normally displayed as blank and is different from a field containing a value of zero.

O

obsolete hardware
Hardware that is no longer supported on the INTUITY CONVERSANT system.

OEM
original equipment manufacturer

OGA
operator-generated alert

on-line help
Messages or information that appear on the user's screen when a "function key" (F1 through F8) is pressed.

operator-generated alert
A system-monitoring message that is transmitted from the INTUITY CONVERSANT system or other computer system to an IBM host computer and is classified as critical or major.

option
An argument used in a command line to modify program output by modifying the execution of a command. When you do not specify any options, the command executes according to its default options.

ORACLE
A company that produces relational database management software. It is also used as a generic term that identifies a database residing on a local or remote system that is created and maintained using an ORACLE RDBMS product.

P

P&C
Prompt and Collect Script Builder action step

PBX
private branch exchange

PC
personal computer

PCB
printed circuit board

PCI
peripheral component interconnect

PCM
pulse code modulation

PEC
price element code

peripheral (device)
Equipment such as printers or terminals that is in addition to the basic processor.

peripheral component interconnect
A newer, higher speed PC bus that is gradually displacing ISA for many components.

permanent process
A process that starts and initializes itself before it is needed by a caller.

phoneme
A single basic sound of a particular spoken language. For example, the English language contains 40 phonemes that represent all basic sounds used with the language. The English word “one” can be represented with three phonemes, “w” - “uh” - “n.” Phonemes vary between languages because of guttural and nasal inflections and syllable constructs.

phrase filtering (screening)
The rejection of unrecognized speech. The WholeWord and FlexWord speech recognition packages can be programmed to reprompt the caller if the INTUITY CONVERSANT system does not recognize a spoken response.

phrase tag
A string of up to 50 characters that identifies the contents of a speech phrase used by an application script.

platform migration
See “platform upgrade.”

platform upgrade
The process of replacing the existing platform with a new platform.

pluggable
A term usually used with speech technologies, in particular standard speech, to indicate that a basic algorithmic technique has been implemented to accept one or more sets of parameters that tailors the algorithm to perform in one or more languages.

poll
A message sent from a central controller to an individual station on a multipoint network inviting that station to send if it has any traffic.

polling
A network arrangement whereby a central computer asks each remote location whether it wants to send information. This arrangement enables each user or remote data terminal to transmit and receive information on shared facilities.

port
A connection or link between two devices that allows information to travel to a desired location. See "telephone network connection."

PRI
Primary Rate Interface

Primary Rate Interface
An ISDN term for connections over E1 or T1 facilities that are usually treated as trunks.

private branch exchange
A private switching system, either manual or automatic, usually serving an organization, such as a business or government agency, and usually located on the customer's premises.

processor
In INTUITY CONVERSANT system documentation, the computer on which UnixWare and INTUITY CONVERSANT system software runs. In general, the part of the computer system that processes the data. Also known as the "central processing unit."

prompt
A message played to a caller that gives the caller a choice of selections in a menu and asks for a response. Compare to "announcement."

prompt and collect (P and C)
A message played to a caller that gives the caller a choice of selections in a menu and asks for a response. The responses is collected and the script progresses based on the caller's response.

pseudo driver
A driver that does not control any hardware.

PS&BM
power supply and battery module

PSTN
public switch telephone network

pulse code modulation
A digital modulation method of encoding voice signals into digital signals. See also "adaptive differential pulse code modulation."

R

RAM
random access memory

RDMBS
ORACLE relational database management system

RECOG
speech recognition feature message class

recognition type
The type of input the recognizer can understand. Available types include touch-tone, dial pulse, and Advanced Speech Recognition (ASR), which includes WholeWord and FlexWord speech recognition.

recognizer
The part of the system that compares caller input to a grammar in order to correctly match (identify) the caller input.

record
See "database record."

recovery
The process of using copies of the INTUITY CONVERSANT system software to reconstruct files that have been lost or damaged. See also "restore."

remote database
Information stored on a system other than the INTUITY CONVERSANT system that can be accessed by the INTUITY CONVERSANT system.

remote maintenance circuit card
An INTUITY CONVERSANT system circuit card, available with a built-in modem, that allows remote personnel (for example, field support) to access all INTUITY CONVERSANT system machines. This card is standard equipment on all new MAP/100, MAP/40, and MAP/5P purchases.

REN
ringer equivalence number

reports administration
The component of INTUITY CONVERSANT system that provides access to system reports, including call classification, call data detail, call data summary, message log, and traffic reports.

restore
The process of recovering lost or damaged files by retrieving them from available back-up tapes or from another disk device. See also "recovery."

restore application
A utility that replaces a damaged application or restores an older version of an application.

reuse
The concept of using a component from a source system in a target system after a software upgrade or platform migration.

RFS
remote file sharing

RM
resource manager

RMB
remote maintenance circuit card

roll back
To cancel changes to a database since the point at which changes were last committed.

rollback segment
A portion of the database that records actions that should be undone under certain circumstances. Rollback segments are used to provide transaction rollback, read consistency, and recovery.

RTS
request to send

S

SBC
sub-band coding

screen pop
A method of delivering a screen of information to a telephone operator at the same time a telephone call is delivered. This is accomplished by a complex chain of tasks that include identifying the calling party number, using that information to access a local or remote ORACLE database, and pulling a “form” full of information from the database using an ORACLE database utility package.

script
The set of instructions for the INTUITY CONVERSANT system to follow during a transaction.

Script Builder
An optional software package that provides a menu-oriented interface designed to assist in the development of custom voice response applications on the INTUITY CONVERSANT system.

SCSI
small computer system interface

SDLC
synchronous data link control

SDN
software defined network

shared database table
A database table that is used in more than one application.

shared speech
Speech that is a part of more than one application.

shared speech pools
A parameter that allows the user of a voice application to share speech components with other applications.

SID
station identification

signal processor circuit card (AYC2, AYC2B, AYC2C, or AYC9d)
A speech processing circuit card that is an older, lower-capacity version of the speech and signal processor (SSP) circuit card (AYC43).

SIMMs
single inline memory modules

single inline memory modules
A method of containing random access memory (RAM) chips on narrow circuit card strips that attach directly to sockets on the CPU circuit card. Multiple SIMMs are sometimes installed on a single CPU circuit card.

single-threaded application
An application that runs on a single voice channel.

slave
A circuit card that depends on the TDM bus for clock information.

SLIP
serial line interface protocol

small computer system interface
A disk drive control technology in which a single SCSI adapter circuit card plugged into a PC slot is capable of controlling as many as seven different hard disks, optical disks, tape drives, etc.

SNA
systems network architecture

SNMP
simple network management protocol

software
The set or sets of programs that instruct the computer hardware to perform a task or series of tasks — for example, UnixWare software and the INTUITY CONVERSANT system software.

software upgrade
The installation of a new version of software in which the existing platform and circuit cards are retained.

source system
The system from which you are upgrading (that is, your system as it exists *before* you upgrade).

speech and signal processor circuit card (AYC43)
The high-performance signal processing circuit card introduced in V6.0 capable of simultaneous support for various speech technologies.

speech energy
The amount of energy in an audio signal. Literally translated, it is the output level of the sound in every phonetic utterance.

speech envelope
The linear representation of voltage on a line. It reflects the sound wave amplitude at different intervals of time. This envelope can be plotted on a graph to represent the oscillation of an audio signal between the positive and negative extremes.

speech file
A file containing an encoded speech phrase.

speech filesystem
A collection of several talkfiles. The filesystem is organized into 16-Kbyte blocks for efficient management and retrieval of talkfiles.

speech modeling
The process of creating WholeWord speech recognition algorithms by collecting thousands of different speech samples of a single word and comparing them all to obtain a statistical average of the word. This average is then used by a WholeWord speech recognition program to recognize a single spoken word.

speech space
An area that contains all digitized speech used for playback in the applications loaded on the system.

speech phrase
A continuous speech segment encoded into a digital string.

speech recognition
The ability of the system to understand input from callers.

SPIP
signal processor interface process

SPPLIB
speech processing library

SQL
structured query language

SR
speech recognition

SSP
speech and signal processor circuit card (AYC43)

standard speech
The speech package available in several languages containing simple words and phrases produced by Lucent Technologies for use with the INTUITY CONVERSANT system. This package includes digits, numbers, days of the week, and months, each spoken with initial, medial, and falling inflection. The speech is in digitized files stored on the hard disk to be used in voice prompts and messages to the caller. This feature is also called Enhanced Basic Speech.

standard vocabulary
A standard package of simple word speech models provided by Lucent Technologies and used for WholeWord speech recognition. These phrases include the digits “zero” through “nine,” “yes,” “no,” and “oh,” or the equivalent words in a specific local language.

string
A contiguous sequence of characters treated as a unit. Strings are normally bounded by white spaces, tabs, or a character designated as a separator. A string value is a specified group of characters symbolized by a variable.

structured query language
A standard data programming language used with data storage and data query applications.

subword technology
A method of speech recognition used in FlexWord recognition that recognizes phonemes or parts of words. Compare to “WholeWord speech recognition.”

switch
A software and hardware device that controls and directs voice and data traffic. A customer-based switch is known as a “private branch exchange.”

switch hook
The device at the top of most telephones that is depressed when the handset is resting in the cradle (in other words, is *on hook*). The device is raised when the handset is picked up (in other words, when the telephone is *off hook*).

switch hook flash
A signaling technique in which the signal is originated by momentarily depressing the "switch hook."

switch interface administration
The component of the INTUITY CONVERSANT system that enables you to define the interaction between the INTUITY CONVERSANT system and switches by allowing you to establish and modify switch interface parameters and protocol options for both analog and digital interfaces.

switch network
Two or more interconnected telephone switching systems.

synchronous communication
A method of data transmission in which bits or characters are sent at regular time intervals, rather than being spaced by start and stop bits. Compare to "asynchronous communication."

SYS
UNIX system calls message class

sysgen
system generation

System 75
An advanced digital switch supporting up to 800 lines that provides voice and data communications for its users.

System 85
An advanced digital switch supporting up to 3000 lines that provides voice and data communications for its users.

system administrator
The person assigned the responsibility of monitoring all INTUITY CONVERSANT system software processing, performing daily system operations and preventive maintenance, and troubleshooting errors as required.

system architecture
The manner in which the INTUITY CONVERSANT system software is structured.

system message
An event or alarm generated by either the INTUITY CONVERSANT system or end-user process.

system monitor
A component of the INTUITY CONVERSANT system that tests to verify that each incoming telephone line and its associated Tip/Ring or T1 circuit card is functional. Through the "System Monitor" component, you are able to see displays of the Voice Channel and Host Session Monitors.

T

T1
A digital transmission link with a capacity of 1.544 Mbps.

table
See "database table."

talkfile
An ASCII file that contains the speech phrase tags and phrase tag numbers for all the phrases of a specific application. The speech phrases are organized and stored in groups. Each talkfile can contain up to 65,535 phrases, and the speech filesystem can contain multiple talkfiles.

talkoff
The process of a caller interrupting a prompt, so the prompt message stops playing.

target system
The system to which you are upgrading (that is, your system as you expect it to exist *after* you upgrade).

TAS
transaction assembler script

TCC
Technology Control Center

TCP/IP
transmission control protocol/internet protocol

TDM
time division multiplexing

TE
terminal emulator

telephone network connection
The point at which a telephone network connection terminates on an INTUITY CONVERSANT system. Supported telephone connections are Tip/Ring, T1, and E1.

terminal emulator
Software that allows a PC or UNIX process to look like a specific type of terminal. In particular, it allows the INTUITY CONVERSANT system to temporarily transform itself into a “look alike” of an IBM 3270 terminal. In addition to providing full 3270 functionality, the terminal emulator enables you to transfer files to and from UNIX.

Text-to-Speech
An optional feature that allows an application to play US English speech directly from ASCII text by converting that text to synthesized speech. The text can be used for prompts or for text retrieved from a database or host, and can be spoken in an application with prerecorded speech. Text-to-Speech application development is supported through Graphical Designer and Script Builder.

ThickNet
A 10-mm (10BASE5) coaxial cable used to provide interLAN communications.

ThinNet
A 5-mm (10BASE2) coaxial cable used to provide interLAN communications.

time-division multiplex
A method of serving a number of simultaneous channels over a common transmission path by assigning the transmission path sequentially to the channels, with each assignment being for a discrete time interval.

Tip/Ring
Analog telecommunications using four-wire media.

token ring
A ring type of local area network that allows any station in the network to communicate with any other station.

trace
A command that can be used to monitor the execution of a script.

traffic
The flow of information or messages through a communications network for voice, data, or audio services.

transaction
The interactions (exchanges) between the caller and the voice response system. A transaction can involve one or more telephone network connections and voice responses from the INTUITY CONVERSANT system. It can also involve one or more of the system optional features, such as speech recognition, 3270 host interface, FAX Actions, etc.

transaction assembler script
The computer program code that controls the application operating on the voice response system. The code can be produced from Graphical Designer, Script Builder, or by writing directly in TAS code.

transaction state machine process
A multi-channel IRAPI application that runs applications controlled by TAS script code.

transient process
A process that is created dynamically only when needed.

TRIP
Tip/Ring interface process

troubleshooting
The process of locating and correcting errors in computer programs. This process is also referred to as debugging.

TSO
Technical Services Organization

TSO
time share operation

TSM
transaction state machine process

TTS
Text-to-Speech

TWIP
T1 interface process

U

UK
United Kingdom

US
United States of America

UNIX Operating System
A multiuser, multitasking computer operating system originally developed by Lucent Technologies.

UNIX shell
The command language that provides a user interface to the UNIX operating system.

upgrade scenario
The particular combination of current hardware, software, application and target hardware, software, applications, etc.

usability
A measurement of how easy an application is for callers to use. The measurement is made by making observations and by asking questions. An application should have high usability to be successful.

USOC
universal service ordering code

UVL
unified voice library

V

VDC
video display controller

vi editor
A screen editor used to create and change electronic files.

virtual channel
A channel that is not associated with an interface to the telephone network (Tip/Ring, T1, LSE1/LST1, or PRI). Virtual channels are intended to run “data-only” applications which do not interact with callers but may interact with DIPs. Voice or network functions (for example, coding or playing speech, call answer, origination, or transfer) will not work on a virtual channel. Virtual channel applications can be initiated only by a “virtual seizure” request to TSM from a DIP.

vocabulary
A collection of words that the INTUITY CONVERSANT system is able to recognize using either WholeWord or FlexWord speech recognition.

vocabulary activation
The set of active vocabularies that define the words and wordlists known to the FlexWord recognizer.

vocabulary loading
The process of copying the vocabulary from the system where it was developed and adding it to the target system.

voice channel
A channel that is associated with an interface to the telephone network (Tip/Ring, T1, E1, LSE1/LST1, or PRI). Any INTUITY CONVERSANT system application can run on a voice channel. Voice channel applications can be initiated by being assigned to particular voice channels or dialed numbers to handle incoming calls or by a “soft seizure” request to TSM from a DIP or the **soft_szr** command.

voice processing co-marketer
A company licensed to purchase voice processing equipment, such as the INTUITY CONVERSANT system, to market and sell based on their own marketing strategies.

voice response output process
A software process that transfers digitized speech between system hardware (for example, Tip/Ring and SSP circuit cards) and data storage devices (for example, hard disk, etc.)

voice response unit
A computer connected to a telephone network that can play messages to callers, recognize caller inputs, access and update a databases, and transfer and monitor calls.

voice system administration
The means by which you are able to administer both voice- and nonvoice-related aspects of the system.

VPC
voice processing co-marketer

VROP
voice response output process

VRU
voice response unit

W

warning
An admonishment or advisory statement used in INTUITY CONVERSANT system documentation to alert the user to the possibility of equipment damage.

WholeWord speech recognition
An optional feature, available in several languages, based on whole-word technology that can recognize the numbers one through zero, “yes”, and “no” (the key words). This feature is reliable, regardless of the individual speaker. This feature can identify the key words when spoken in phrases with other words. A string of key words, called *connected digits*, can be recognized. During the prompt announcement, the caller can speak or use touch tones (or dial pulses, if available). See also “whole-word technology.”

whole-word technology
The ability to recognize an entire word, rather than just the phoneme or a part of a word. Compare to “subword technology.”

wink signal
An interruption of current to a busy lamp indicating that there is a line on hold.

word
A unique utterance understood by the recognizer.

wordlist
A set of words that are available for FlexWord recognition by an application during a Prompt & Collect action step.

word spotting
The ability to search through extraneous speech during a recognition.

Index

Numerics

3270 host interface
installing enhanced file transfer package, 10-63
LINKix, 10-49
8-port asynchronous circuit card
driver, installing, 5-82, 5-85
jumper settings, 5-80

A

A_Callinfo
trace, 2-34
A_Event
trace, 2-34
A_RouteSel
trace, 2-35
A_Tran
trace, 2-35
accounts, setting up user, 8-39
add_device command, A-19
Adjunct/Switch Application Interface (ASAI)
channel troubles, repairing, 1-44
digital link troubles, repairing, 1-47
domain troubles, repairing, 1-42
installing the package, 10-7
messages, 2-37
packages, installing, 10-7
trace
A_Callinfo, 2-34
A_Event, 2-34
A_RouteSel, 2-35
A_Tran, 2-35
high setting, 2-37
low setting, 2-33
normal setting, 2-34
utility, 2-32
troubles, repairing, 1-39
administrative troubles, repairing, 1-52
advanced file system administration, see VERITAS
alarm
card
installing, 7-59
removing, 7-58
view, 7-58
panel
installing, 7-36
removing, 7-35
view, 7-34
analog interfaces
installing the switch package, 10-20

application
related trouble, repairing, 1-7
server, installing, 8-17
ASP driver, see signal processor circuit card
ASYNC_TEST
speech script builder backup, installing, 10-6
transaction script builder backup, installing, 10-5
asynchronous communications
circuit card
8-port IPC-900, 5-79
gemini-1000, 5-79
asynchronous host interface toolkit
installing, 10-3
AYC10
see Tip/Ring circuit card
AYC21 Operating Mode Switch Settings, 5-17

B

backing up
system, 3-6
backplanes
circuit card
installing, 7-4
removing, 7-3
slot diagnosis, 2-4
view, 7-2
hard disk carriage
installing, 7-10
removing, 7-9
view, 7-8
power supply
installing, 7-7
removing, 7-5
view, 7-5
base system software
contents, 9-2
installing, 8-2, 9-2
bay assignments, A-3
boot-up troubles, repairing, 1-3

C

cables
connections, checking, 2-2
call bridge
application package, installing, 10-21
Call Classification Analysis (CCA)
package, installing, 10-22
CALLVISOR PC ISDN package, installing, 10-8
cartridge tapes
drives
jumper settings, 7-33
location, 7-30

removing, 7-31
inserting, 3-2
removing, 3-4
channel
login/logout, 2-39
state trouble, repairing, 1-60
checking
backplane slot, 2-4
memory resources, 1-65
other circuit cards, 2-6
switch settings, 2-5
terminating resistors, 2-3
circuit cards
8-port asynchronous
driver, installing, 5-82, 5-85
jumper settings, 5-80
asynchronous communications
8-port IPC-900, 5-79
gemini-1000, 5-79
backplane
installing, 7-4
removing, 7-3
view, 7-2
cage
fan
installing, 7-42
location, 7-41
removing, 7-41
checking, 2-2
diagnostics, 2-2
Ethernet LAN
configuration, 5-36
driver, installing, 5-36
function, 5-35
jumper settings, 5-36
version 1, 5-35
view, 5-35
version 2, 5-38
view, 5-39
fan
view, 7-42
fax
version 1, 5-29
version 2, 5-32
FIFO/SIB
jumper settings, 5-90
switch settings, 5-90
holding
large, 4-3
small, 4-3
IPCI, 5-77
P5 200 MHz CPU
checking resources, 1-62
CMOS parameter settings, 5-99
host adapter settings

accessing, 5-96
advanced configuration options, 5-99
SCSI bus interface definitions, 5-97
SCSI device configuration, 5-98
installation, 5-94
maximum installed, 5-92
reducing usage, 1-69
resource options, 5-93
SIMMs
identifying defective, 7-51
installing, 7-53
removing, 7-53
PC/ISDN (IPCI), 5-77
remote maintenance, 5-105
function, 5-105
maximum installed, 5-105
resource options, 5-108
view, 5-106
speech and signal processor (SSP), 5-23
SSP, see speech and signal processor
synchronous
FIFO/SIB, 5-87
PC/XL I/O, 5-87
text-to-speech (TTS), 5-26
Tip/Ring
driver, installing, 5-13
Token Ring
driver, installing, 5-72, 5-74
version 1, 5-52
version 2, 5-55
CMOS parameter settings, 5-99
comcodes, B-1
component ordering numbers, B-1
configuration
adding hardware, A-4
bay assignments, A-3
comparing, A-17
presetting hardware resources, A-18
removing hardware, A-6
saving, A-14
slot assignments, A-3
specifying new, A-9
viewing
dated, A-17
successful, A-15
unsuccessful, A-16
configurator, see Hardware Resource Allocator

D

data collection
toolkit, installing, 10-24
data interface process (DIP)

reducing load, 1-67
database
checking free space, 2-23
diagnostics, 2-23
directory, restoring, 3-14
ORACLE, storage, 2-24
reducing load, 1-67
system
starting, 3-23
stopping, 3-23
table, dropping, 3-24
verifying connection, 2-26
device_data file, A-19
diagnostics, 2-1
circuit card, 2-2, 2-6
database, 2-23
extents, 2-24
multi-port asynchronous circuit card
board status, 2-16
driver status, 2-15
port status, 2-17
register dump, 2-19
serial port tests
external loopback, 2-20
internal loopback, 2-20
termio, 2-19
ORACLE network, 2-25
TDM bus, 2-27
dial pulse recognition (DPR)
package, installing, 10-25
disable domains, 2-38
diskette drive
installing, 7-38
jumper settings, 7-39
location, 7-37
removing, 7-37
size, 7-37
types, 7-38
diskettes
inserting, 3-5
removing, 3-5
types, 3-5
domains, enable/disable requests, 2-38
dress cover
installing, 4-7
drivers
8-port asynchronous circuit card, installing, 5-82, 5-85
E1/T1, installing, 5-17
Ethernet LAN, installing, 5-36
Tip/Ring circuit card, installing, 5-13
Token Ring Hardware Support, installing, 5-72, 5-74
drives
cartridge tape, 3-2
inserting tapes, 3-2
jumper settings, 7-33
location, 7-30
removing, 7-31
removing tapes, 3-4

diskette
installing, 7-38
jumper settings, 7-39
location, 7-37
removing, 7-37
size, 7-37
types, 7-38
hard disk
adding, 6-17
checking resources, 1-64
cleaning, 6-24
contents, 6-2
identifying
drive 0 failure, nonmirrored system, 6-3
drive failure, mirrored system, 6-4
speech drive failure, nonmirrored system, 6-4
low-level formatting, 6-26
mounting, 6-7
reducing usage, 1-70
removing, 6-6
replacing
Drive 0, 6-8
mirrored system, 6-14
speech disk, nonmirrored system, 6-10

E

E1/T1 circuit card driver, installing, 5-17
electrostatic discharge
protecting against damage from, 4-2
sensitive area of electronic components, 4-4
warning symbol, 4-2
enhanced basic speech
package, installing, 10-27
enhancement package and INTUNIX patch, installing, 8-52
EQUINOX megaport 8-port serial, see 8-port asynchronous circuit card
Ethernet LAN circuit card
adapter setup program, installing, 10-48
configuration, 5-36
driver, installing, 5-36
function, 5-35
jumper settings, 5-36
version 1 view, 5-35
version 2 view, 5-39
event
3P CALLEND, 2-37
ALERTING, 2-37
CALLEND, 2-37
CONFERENCED, 2-37
CONNECTED, 2-37
CUT THROUGH, 2-37
DENIAL, 2-37
DROP, 2-37

OFFERED, 2-37
QUEUED, 2-37
routing, 2-38
TRANSFERRED, 2-37
TRUNK SEIZED, 2-37
extents
diagnostics, 2-24
number allowed, 2-24
external alarms
package, installing, 10-28

F

fan filters
cleaning, 7-44
location, 7-43
removing, 7-43
fans
circuit card cage
installing, 7-42
location, 7-41
removing, 7-41
view, 7-42
power supply, 7-41
fax
circuit card
version 1, 5-29
version 2, 5-32
jumper settings, 5-33
switch settings, 5-34
FAX Actions
package, installing, 10-29
troubles, repairing, 1-28
feature licensing troubles, repairing, 1-53
feature test script
package, installing, 10-87
FIFO/SIB circuit card
jumper settings, 5-90
switch settings, 5-90
file systems
administration, see VERITAS
FlexWord speech recognition
base package, installing, 10-36
US English, installing, 10-37
FlexWord toolkit
installing, 10-40
floppy disks, see diskettes
Form Filler Plus
package, installing, 10-42
repairing, 1-34
formatting, low-level, hard disk drives, 6-26
fuses
installing, 7-47
location, 7-44
removing, 7-46
types, 7-46

G

Graphical Speech Editor (GSE)
    package, installing, 10-44

H

hard disk
    carriage
        backplane installing, 7-10
        backplane removing, 7-9
        backplane view, 7-8
        installing, 7-49
        removing, 7-48
        view, 7-9
    drives
        adding, 6-17
        checking resources, 1-64
        cleaning, 6-24
        contents, 6-2
        identifying
            drive 0 failure, nonmirrored system, 6-3
            drive failure, mirrored system, 6-4
            speech drive failure, nonmirrored system, 6-4
        mounting, 6-7
        reducing usage, 1-70
        removing, 6-6
        replacing
            mirrored system, 6-14
            speech disk, nonmirrored system, 6-10
        replacing Drive 0, 6-8
hardware configuration checker, A-17
Hardware Resource Allocator
    adding hardware, A-4
    commands, A-19
    configuration viewing
        dated, A-17
        successful, A-15
        unsuccessful, A-16
    configuration, comparing, A-17
    configuration, saving, A-14
    installing, 10-2
    new configuration, specifying, A-9
    presetting hardware resources, A-18
    removing hardware, A-6
heartbeat messages, 2-39
host
    adapter settings, 5-96
    packages, installing, 10-62
    reducing load, 1-66

I

INTUNIX patch and enhancement package, installing, 8-52
IPCI circuit card, 5-77
IVC6, see Tip/Ring circuit card

L

LAN circuit card, see Ethernet LAN circuit card
LINKix
    packages, installing, 10-49
load
    culprits, identifying, 1-62
    reducing, 1-61

M

MAP/100P
    back view, A-2
    front view, A-3
master/slave configuration, confirmation, 2-27
memory
    resources, checking, 1-65
    usage, reducing, 1-71
mirroring
    removing, 6-31
mouse
    initializing, 8-36
multi-port asynchronous circuit card
    diagnostics
        board status, 2-16
        driver status, 2-15
        port status, 2-17
        register dump, 2-19
        serial port tests
            external loopback, 2-20
            internal loopback, 2-20
        termio, 2-19

N

NetView alarm interface
    installing, 10-65

O

open cursors, increasing limits, 1-24

operating system
rebooting, 3-22
shutting down, 3-20
operational troubles, repairing, 1-53
ORACLE
add-on packages
installing, 10-66
database connection, verifying, 2-26
database storage, 2-24
development packages, installing, 10-66
internet connections, 2-25
maxextents, 2-24
minextents, 2-24
network diagnostics, 2-25
PRO*C, 10-66
SQL*Forms, 10-66
SQL*Menu, 10-66
SQL*NET TCP/IP package, installing, 10-70
SQL*ReportWriter, 10-66
storage clause, 2-24
troubles, repairing, 1-23
ordering numbers
components, B-1

P

P5 200 MHz CPU circuit card
checking resources, 1-62
CMOS parameter settings, 5-99
host adapter settings
accessing, 5-96
advanced configuration options, 5-99
SCSI bus interface definitions, 5-97
SCSI device configuration, 5-98
installation, 5-94
maximum installed, 5-92
reducing usage, 1-69
resource options, 5-93
SIMMs
identifying defective, 7-51
installing, 7-53
removing, 7-53
PC/ISDN interface circuit card, 5-77
PC/XL synchronous circuit card, 5-87
performance
problem indications, 1-61
troubles, repairing, 1-58
peripheral carriage, 7-32
pkgrm command, 10-90
power
connections, 4-5
removing, 4-5
restoring, 4-8
power supplies
back view, 7-55
backplane
installing, 7-7

removing, 7-5
view, 7-5
fan, 7-41
installing, 7-57
removing, 7-55
power up troubles, isolating, 1-2
Primary Rate Interface (PRI)
package, installing, 10-71
troubles, repairing, 1-31
PRO*C, 10-66

R

reducing load, 1-61
remote
maintenance circuit card
function, 5-105
maximum installed, 5-105
resource options, 5-108
view, 5-106
removepkg command, 10-90
removing
software, 10-90
reports
troubles, repairing, 1-59
resources, memory, checking, 1-65
restoring
databases, 3-14
upgraded system, 3-14
V6.0 system, 3-11
RMB, see remote maintenance circuit card

S

Script Builder
FAX Actions
package, installing, 10-29
troubles, repairing, 1-28
package, installing, 10-74
troubles, repairing, 1-27
server, application, installing, 8-17
signal processor (SP) circuit card
diagnostics, 2-3
resources, checking, 1-66
SIMMs
identifying defective, 7-51
installing, 7-53
removing, 7-53
view, 7-50
slot assignments, A-3
software, removing, 10-90
speech
and signal processor circuit card, 5-23
recognition

accuracy troubles, repairing, 1-19
repairing troubles, 1-13
SQL*
Forms, 10-66
Menu, 10-66
NET TCP/IP package, installing, 10-70
PLUS, 2-26
ReportWriter, 10-66
SSP circuit card, see speech and signal processor circuit card
synchronous
circuit cards
FIFO/SIB, 5-87
PC/XL, 5-87
host interface package, installing, 10-62
system
backing up, 3-6
restoring
database, 3-14
upgraded system, 3-14
V6.0 system, 3-11
traffic tables, recreating, 3-25

T

T1
circuit cards
AYC11 circuit card, 5-19
AYC3B circuit card, 5-19
packages, installing, 10-76
tape drives
inserting cartridge tapes, 3-2
jumper settings, 7-33
removing cartridge tapes, 3-4
tapes
inserting, 3-2
removing, 3-4
TCP/IP
ORACLE SQL*NET package, installing, 10-70
TDM bus, 7-59
checking, 2-27
master/slave configuration, 2-27
terminating resistors, checking, 2-3
tests
multi-port asynchronous circuit card
serial port external loopback, 2-20
serial port internal loopback, 2-20
Text-to-Speech (TTS)
circuit card
jumper settings, 5-27
switch settings, 5-27
package, installing, 10-81
troubles, repairing, 1-35
Tip/Ring
circuit card
driver, installing, 5-13
distribution hardware

installing, 7-63
removing, 7-62
view, 7-61
Token Ring
circuit card
driver, installing, 5-72, 5-74
version 1, 5-52
version 2, 5-55
support package, installing, 5-72, 5-74
touch-tone
troubles, repairing, 1-59
traffic tables, recreating, 3-25
TTS, see Text-to-Speech (TTS)

U

upgrade
version 1 LAN to version 2 LAN, 5-48
user accounts, setting up, 8-39

V

VERITAS
activate volume manager, 8-49
software
package, installing, 8-46
volinstall, 8-49
voice
code, 1-69
play, 1-67
system
shutting down, 3-19
starting, 3-15
stopping, 3-17
troubles, repairing, 1-54
volinstall command, 8-49
volume manager, activating, 8-49

W

WholeWord speech recognition
packages, installing, 10-85