2200A-L1A DATA CONTROL UNIT
(NETWORK CONTROLLER)
DESCRIPTION AND OPERATION
"DATAPHONE®" II SERVICE

CONTENTS PAGE

1. GENERAL 2

2. PHYSICAL DESCRIPTION 2

3. FUNCTIONAL DESCRIPTION 3

FRONT PANEL SWITCHES AND INDICATORS 3

A. Switches and Indicators Associated With KS-21447, L10 Minirecorder . . . 3

B. Switches and Indicators Associated With Controller and Ports 5

INTERFACE PORTS 5

A. LT (Local Terminal) Interface . . . 5

B. RT (Remote Terminal) Interface . . 6

C. CC (Control Channel) Interfaces . . 6

D. PTR (Printer) Interface 6

E. TELCO (Telephone Company) Interface 6

F. NET (Network) Interface 6

G. AUX (Auxiliary) Interface 6

TEST AND COMMAND MENUS 6

A. Modem Tests and Commands (md) . 7

B. Network Controller Commands (nc) . 13

C. Diagnostic and Maintenance Routines and Lists (dmr) 19

291A POWER UNIT 23

KS-21447, L10 MINIRECORDER 23

SECURITY 23

ADDRESSING 23

4. OPERATION 24

START-UP PROCEDURES - *BOOTING* THE SYSTEM PROGRAM 24

NETWORK FAULT REPORTING AND DISPLAY 25

GENERAL INFORMATION FOR USING "DATASPEED®" 40/2 TERMINAL SET (OR EQUIVALENT) TO OPERATE THE NC . . . 26

A. Terminal Display Screen 28

B. Terminal Keyboard 28

C. Model 43 Teleprinter (or Equivalent) 30

PRINT COMMAND 30

GENERAL NC OPERATING PROCEDURES WITH EXAMPLE OF "LONG" (COMPLETE) PROCEDURE 30

GENERAL NC OPERATING PROCEDURES WITH EXAMPLE OF "SHORT" (CONDENSED) PROCEDURE 32

NOTICE

Not for use or disclosure outside the
Bell System except under written agreement

CONTENTS PAGE

MODEM TESTS AND COMMANDS OPERATION 32

A. Nondisruptive Modem Tests and Commands 32

B. Disruptive Modem Tests and Commands 34

NETWORK CONTROLLER COMMANDS OPERATION 38

A. Nondisruptive Network Controller Commands 38

B. Disruptive Network Controller Commands 38

DIAGNOSTIC AND MAINTENANCE ROUTINES OPERATION 39

5. REFERENCES 39

1. GENERAL

1.01 This section contains the physical and functional description and operating procedure for the 2200A-L1A data control unit (DCU) network controller (NC) equipped with software version number 2.7 and shown in Fig. 1.

1.02 Whenever this section is reissued, the reason for reissue will be contained in this paragraph.

1.03 The NC works by itself or in conjunction with another NC or with 2100A-L1 DCU diagnostic console (DC). (For more information regarding the DC refer to Section 592-101-100.) The DC and NC are referred to jointly as diagnostic control devices (DCDs).

1.04 The NC is a part of the network diagnostic system (NDS) of DATAPHONE® II service. The NC expands the diagnostic features of data sets (DSs) 2024-, 2048-, and 2096-type of the DATAPHONE II service.

1.05 The NC provides control and diagnostic functions to DATAPHONE II service data set networks.

1.06 The NC provides approximately the same control and diagnostic features as the data sets with the following additions:

- Ability to access any data set on the network to which it is connected
- Ability to gather, display and keep up-to-date network faults and their location
- Capability of testing extended service networks
- Full feature operation to several timesharing users
- Ability to initiate a test while another test is in progress
- Execution of tests at a prescribed time in the future
- Remote operation through a number of peripheral connections
- Storage of system files and customer-created files on a tape cartridge
- ***Routine*** capability enabling a user to assemble and store a sequence of tests.

1.07 The following is a technical specification summary of the NC:

Power Requirements: 96 to 129 volts, 200 watts maximum, at 60±1/2 Hz

Ambient Temperature Range: +40 to 120°F

Relative Humidity Range: 5 to 95 percent, noncondensing.

2. PHYSICAL DESCRIPTION

2.01 The NC measures approximately 17.5 inches wide, 16 inches deep, and 10.5 inches high and weighs approximately 50 pounds.

2.02 A power unit, power connectors, and a DCD address dual in-line package (DIP) switch are present at the rear of the NC (Fig. 2).

2.03 ***291A Power Unit:*** This power unit is shipped loose with the NC. It has three con-

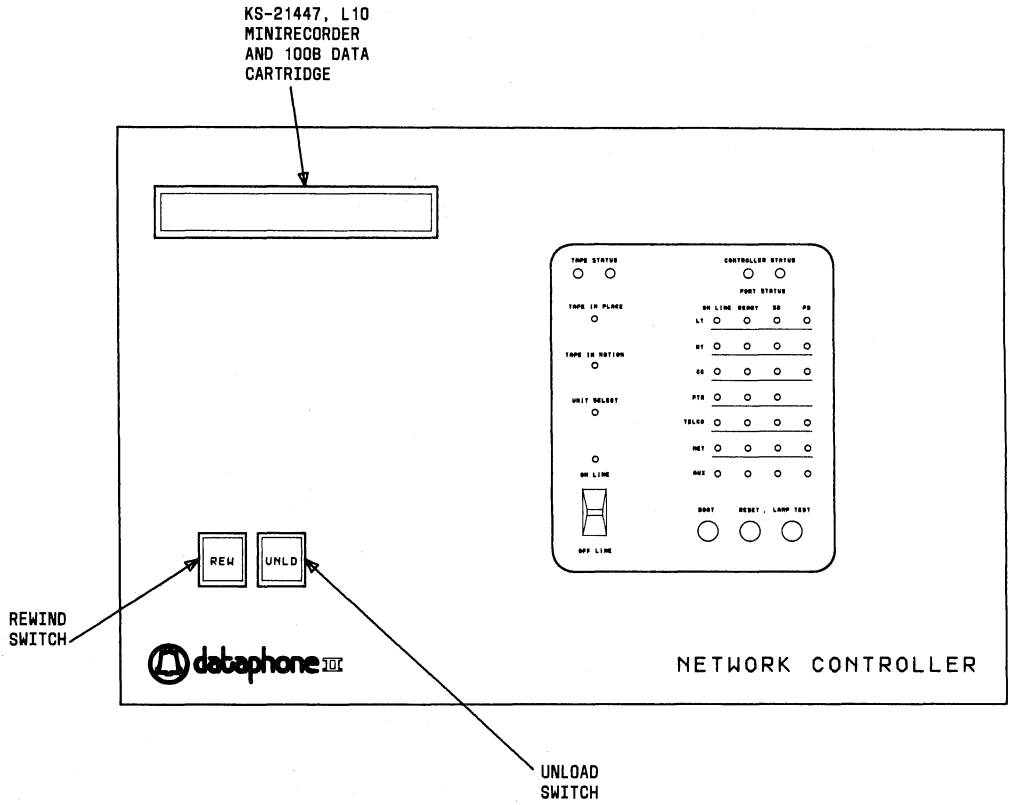

Fig. 1—2200A-L1A Data Control Unit (Network Controller)

nectors (described below) and eight fuses. The fuses are labeled F1 to F8.

2.04 ***291A Power Unit Connectors:*** The large, round connector provides for the KS-14532, L24 ac power cord. Connector J1 accepts the dc output of the power unit and provides it to the circuits of the NC via plug P1. Jack/plug pair J2/P2 provide ac power from the power unit to the NC cooling fans attached to the bottom of the NC housing.

2.05 ***Interface Connections:*** The physical characteristics of the various interface connectors are described in Table A.

3. FUNCTIONAL DESCRIPTION

3.01 This part functionally describes the NC front panel switches and indicators; interface ports; all test and command menus; the 291A power unit; the KS-21447, L10 minirecorder; security; and addressing.

FRONT PANEL SWITCHES AND INDICATORS (FIG. 1)

A. Switches and Indicators Associated With KS-21447, L10 Minirecorder

3.02 ***REW (Rewind) Switch:*** When depressed (with the ON-LINE/OFF-LINE switch in

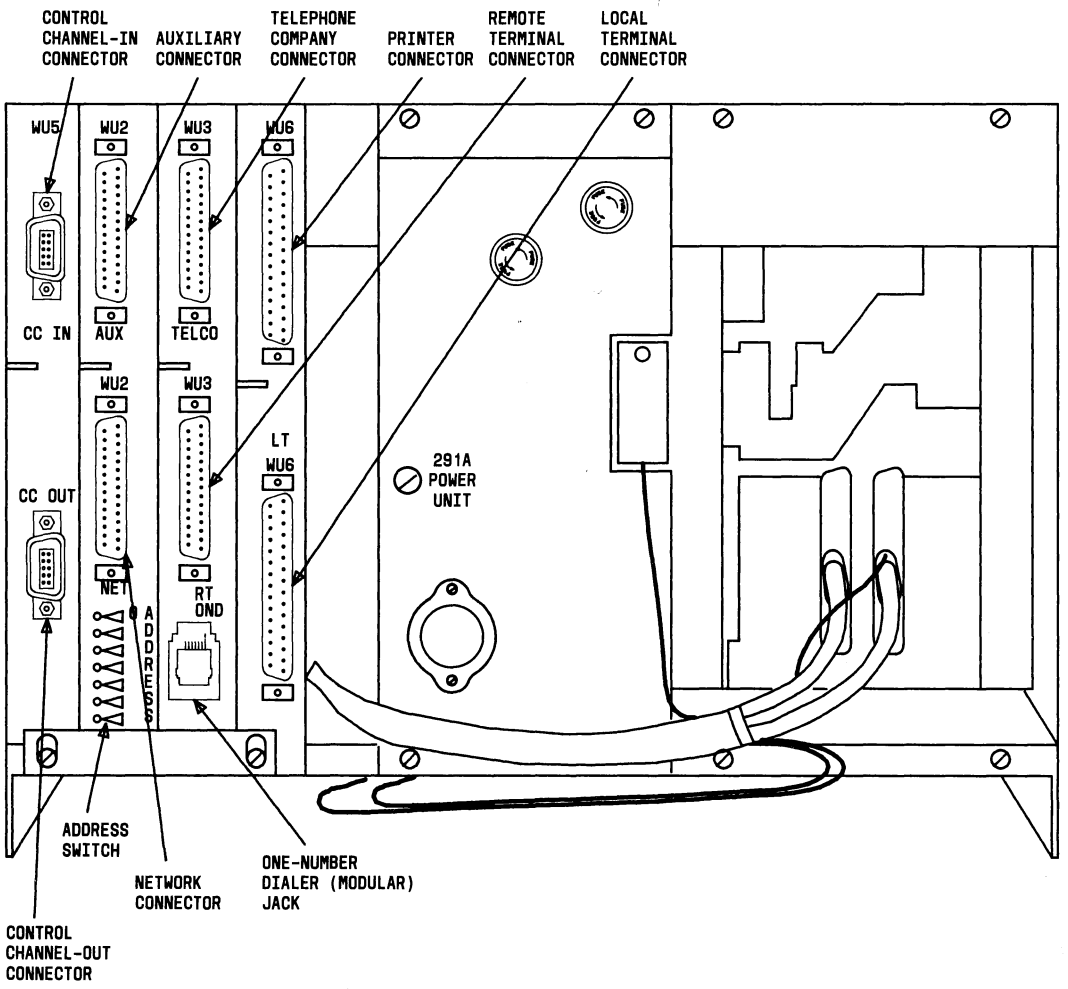

Fig. 2—Network Controller—Rear View

OFF-LINE) rewinds the tape in the 100B data cartridge under operator, or front panel, control.

3.03 ***UNLD (Unload) Switch:*** When depressed (with the ON-LINE/OFF-LINE switch in OFF-LINE) releases the 100B data cartridge from the minirecorder.

3.04 ***TAPE STATUS Indicators:*** These two light-emitting diodes (LEDs) indicate to the operator that the continuous diagnostic testing of the tape system has either passed (green LED) or failed (red LED).

3.05 ***TAPE IN PLACE Indicator:*** When lighted, this yellow LED indicates that a 100B data cartridge has been inserted into the tape drive unit and is properly seated in the slot.

TABLE A

INTERFACE CONNECTORS PHYSICAL CHARACTERISTICS

CONNECTOR	FUNCTION	SEX	NUMBER PINS	REMARKS
CC-IN	Control Channel-In	Male	10	
CC-OUT	Control Channel-Out	Female	10	
AUX	Auxiliary	Male	25	RS-232-C DTE
NET	Network	Male	25	RS-232-C DTE
TELCO	Telephone Company	Male	25	RS-232-C DTE
RT	Remote Terminal	Male	25	RS-232-C DTE
OND	One-Number Dialer	Female	4	Modular Jack
PTR	Printer	Female	37	RS-449 DCE, RS-423
LT	Local Terminal	Female	37	RS-449 DCE, RS-423

3.06 ***TAPE IN MOTION Indicator:*** When lighted, this yellow LED indicates tape movement.

3.07 ***UNIT SELECT Indicator:*** When lighted, this yellow LED indicates that the minirecorder is being employed to read or write a file.

3.08 ***ON-LINE Indicator:*** When lighted, this yellow LED indicates the minirecorder is under NC control.

3.09 ***ON-LINE/OFF-LINE Switch:*** This 2-position toggle switch determines whether the minirecorder is under NC or operator control. In ON-LINE the minirecorder is under NC control. In OFF-LINE the minirecorder is under operator, or front panel, control.

B. Switches and Indicators Associated With Controller and Ports

3.10 ***CONTROLLER STATUS Indicators:*** These LEDS indicate the state of the NC as determined by continuous diagnostic testing. The green LED signifies proper operation of the entire NC and the red LED signifies failure of some component of the NC.

3.11 ***PORT STATUS Indicators:*** When lighted, these 27 yellow LEDs indicate the status of the seven ports provided by the NC. Each port except the PTR (printer) port has an ON-LINE, READY, SD (send data), and RD (receive data) indicator associated with it. The PTR (printer) port does not have an RD indicator. The ON-LINE LED indicates that the port option for that particular port has been enabled by the user. The READY LED indicates that a peripheral device has been detected on that particular port. The SD and RD LEDs indicate the status of the send data and receive data leads on the particular ***port*** interface. The optional printer will be a receive-only type so no RD indicator is necessary.

3.12 ***BOOT AND RESET Switches:*** These red momentary-contact pushbutton switches are used to load the system files located on the 100B data cartridge into the memory of the NC.

3.13 ***LAMP TEST Switch:*** This black momentary contact pushbutton switch tests all LEDs on the front panel of the NC.

INTERFACE PORTS

A. LT (Local Terminal) Interface

3.14 This port provides local access for the DATASPEED® 40/2 terminal set (or equivalent device) which is the primary input/output (I/O)

peripheral device. A terminal on this port is ***required*** for normal operation. The Electronic Industries Association (EIA) RS-449 interface is shown in Table B.

B. RT (Remote Terminal) Interface

3.15 This port provides a remote DATASPEED 40/2 terminal set (or equivalent) access to the NC and the associated network. This access is subject to the security features discussed elsewhere in this part. The EIA RS-232-C interface is shown in Table C.

C. CC (Control Channel) Interfaces

3.16 This pair of ports (CC-IN and CC-OUT) provide connection of the 1200 bps control channel to a data set mounting or another DCD. The CC-IN and CC-OUT pin assignments, lead designations, and functions are shown in Tables D and E.

D. PTR (Printer) Interface

3.17 This port is provided for connection of an optional receive-only printer (ROP) to the NC at 300 bps. The EIA RS-449 interface is shown in Table B.

E. TELCO (Telephone Company) Interface

3.18 This port permits telephone company (telco) personnel to monitor and troubleshoot the local network from a remote test center using an NC. Automatic reporting of DATAPHONE II service networks faults to a test center can also be accomplished using this port. This port uses an RS-232-C interface. Refer to Table C.

F. NET (Network) Interface

3.19 This port provides for other DCDs, either customer or telco, to connect together. This connection is usually remote and via private line or switched network channels. When NCs are connected together through this port they can direct data set tests and commands to each other's DATAPHONE II data sets on their respective control channels. However, one NC cannot alter the operation of the other. This port uses an RS-232-C interface. Refer to Table C.

G. AUX (Auxiliary) Interface

3.20 This port is not used at this time.

TEST AND COMMAND MENUS

3.21 Three categories of tests and commands are available to an NC operator:

- Modulator—demodulator (modem) tests and commands
- Network controller commands

TABLE B

LOCAL TERMINAL (LT) AND PRINTER (PTR) PORT CONNECTORS

RS-449			APPLIES TO:	
PIN NO.	MNEMONIC	NAME	LT CONNECTOR	PTR CONNECTOR
4, 22	SD	Send Data	yes	no
6	RD	Receive Data	yes	yes
9	CS	Clear-to-Send	yes	yes
11	DM	Data Mode	yes	yes
12, 30	TR	Terminal Ready	yes	yes
13	RR	Receive Ready	yes	yes
19	SG	Signal Ground	yes	yes
20	RC	Receive Common	yes	no
37	SC	Send Common	yes	yes

TABLE C

NETWORK (NET), REMOTE TERMINAL (RT), TELEPHONE COMPANY (TELCO) CONNECTORS

PIN NO.	FUNCTION	LEAD DESIGNATION RS-232-C
1	Protective Ground	AA
2	Transmitted Data	BA
3	Received Data	BB
4	Request-to-Send	CA
5	Clear-to-Send	CB
6	Data Set Ready	CC
7	Signal Ground	AB
8	Received Line Signal Detector	CF
12	Data Signal Rate Selector (DCE Source)	CI*
14	Auxiliary Received Line Signal Detector	ACF*
18		CN*
20	Data Terminal Ready	CD
21	Remote Digital Loopback	RL*
22	Ring Indicator	CE
23	Data Signal Rate Selector (DTE Source)	CH
25		TN*

* Non-EIA RS-232-C lead.

- Diagnostic and Maintenance routines.

Each of these categories is described below.

A. Modem Tests and Commands (md)

3.22 The data set tests and commands are shown divided into two groups: disruptive and nondisruptive (Fig. 3). Disruptive tests and commands can affect the functioning of the network, such that normal flow of data information cannot occur. Most tests on a data set prevent it, and at times all the other data sets in its network, from transferring data while the test is in progress. Changing options can also affect data transfer. Each item in the data set test and command menu is described below.

Nondisruptive Modem Tests and Commands

3.23 ***Display Modem Status (dsms):*** This command provides the user with the fault and status information for the requested data set and all data sets "below" it on the network. The following conditions are reported by the dsms command:

- Disable mode
- Test mode

TABLE D

LOCAL CONTROL CHANNEL-IN (CC-IN)

PIN NO.	LEAD DESIGNATION	FUNCTION
3	SDI	Send Data In
4	RDI	Receive Data In
5	SG	Signal Ground
6	RCI	Receive Common In
7	RSI	Request-to-Send In
8	CSI	Clear-to-Send In
9	SCI	Send Common In

TABLE E

LOCAL CONTROL CHANNEL-OUT (CC-OUT)

PIN NO.	LEAD DESIGNATION	FUNCTION
1	FG	Fixed Ground
3	SDO	Send Data Out
4	RDO	Receive Data Out
5	SG	Signal Ground
6	RCO	Receive Common Out
7	RSO	Request-to-Send Out
8	CSO	Clear-to-Send Out
9	SCO	Send Common Out

- Maintenance mode
- Standby facility
- Make busy
- Data mode (DM) off.

3.24 ***Display Options (dsop):*** When this command is selected, the NC will transmit a command to the addressed data set to send back to it a list of its currently installed options. When the NC receives the list, it will display the data set options in the format of a table as shown in Fig. 4 (shaded area). Options which are installed are shown by a number. Options which can be used for the data set, but are not now installed, are indicated by a dash.

3.25 ***Display Poll List (dspl):*** When this command is selected, the NC will send a command to the addressed data set to send its poll list. Upon receipt the NC will display the poll list.

3.26 ***EIA Status (eia):*** Selecting this command from the NC causes the data set addressed to report the status of its EIA customer interface leads. When the NC receives this report, the results are displayed as on, off, or flashing (**). When an interface lead does not apply to a data set type, the label for that lead is not shown. The SD, RD, RS, CS, and RR leads can be shown to be changing by flashing ** instead of ***on*** or ***off*** indications. Each lead is observed by the data set for a period of time and, if the signal on the lead changes during this time, the data set reports the lead as changing.

3.27 ***Identity (id):*** The identity command instructs an addressed data set to report its type, its software version number(s), and, if it is a DS 2096-type, its current multiplex configuration. The multiplex configuration is shown by the NC as one of the following: 9600, 7200, 4800, 7200 2400, 4800 4200, 2400 2400, 4800 2400 2400, or 2400 2400 2400 2400. These multiplex indications are the same as those displayed on the screen when the poll list command is selected.

3.28 ***Receive Signal Level (rsl):*** The data set addressed by the NC will report the level of its received signal. This is a readout of a stored value in the data set. This is the same as the data set test ***RSL*** available from the front panel. For private line data sets, the expected level will be from −8 dBm to −24 dBm. For switched network data sets, this level range will be from −12 dBm to −42 dBm.

3.29 ***Receive Signal Quality (rsq):*** The data set addressed by the NC will report the value of the quality of its received signal. This is the same as the test ***RSQ*** available from the data set front panel. The values reported are from 0 to 9. Higher numbers indicate degraded signal quality.

3.30 ***Report Terminal Power (rtp):*** This command requests that a data set look for a voltage at its request-to-send (RS) customer interface

```
TIME_____LOCAL_PORT_NET1_NET2_NET3_____FAULT_TYPE_________TOTAL_SYSTEM_FAULTS:04
10:11      021        01                facility,
10:11      021                          facility,
10:11      011        01                facility,
10:11      011                          facility,
```

```
enter selection: md
selection—modem tests and commands

non-disruptive                          disruptive

(dsms) display modem status             (abt)  abort test
(dsop) display options                  (auto) automatic network test
(dspl) display poll list                (chmx) 2096 change mux
(eia)  EIA status                       (chop) change options
(id)   identity                         (chpl) change poll list
(rsl)  receive signal level             (cli)  circuit loss - inbound
(rsq)  receive signal quality           (clo)  circuit loss - outbound
(rtp)  report terminal power            (dsab) disable/enable
(sp)   signal profile                   (dt)   digital test
                                        (ee)   end to end block error test
CODE   TEST OR COMMAND NAME             (lpbk) loopback
                                        (mt)   modem test
                                        (sl)   service line
                                        (st)   send tone


enter selection:
```

Fig. 3—NC Display of Modem Tests and Commands

lead. If a voltage exists which is in the EIA standard range (greater than +5 and less than −5 volts), the terminal connected to the data set is considered to be powered and the NC will display ***terminal power on***.

3.31 ***Signal Profile (sp):*** This command requests private line point-to-point data sets to send the following parameters:

- Receive level
- Receive signal quality
- Frequency shift
- Phase jitter
- Background noise.

Except for receive level, each parameter listed above will be shown with a number from 0 to 9 to its right. These numbers are relative with the ***lower*** numbers being the best indicators. Receive level is indicated in absolute values (eg, −24 DBM).

Disruptive Data Set Tests and Commands

3.32 ***Abort Test (abt):*** If this command is directed to any data set which originated a test or command or to any data set upstream from the originating data set, all data sets involved in the test or command will abort the test or command.

3.33 ***Automatic Network Test (auto):*** This test can be addressed to any control data set. When the control data set receives this command, it

```
TIME_____LOCAL_PORT_NET1_NET2_NET3_____FAULT_TYPE_____TOTAL_SYSTEM_FAULTS:04
10:11     021        01               facility,
10:11     021                         facility,
10:11     011        01               facility,
10:11     011                         facility,
```

```
enter selecton: dsop
selection-display options

enter address
(local/port/net1/net2/net3): 011

enter selection:
RESULTS****** completion time: 10:14
selection-change options

address: 011



accessing tape -- WAIT 0

  current options

A _ _ 3 _
B 1 _ _
C 1       _ _
D 1 2   _ _ _ 7 _
E   2 _ _ _ _ _ _
F
G _ _ _ _ _ _
H
I
J _
K

*************
enter selection:
```

Fig. 4—NC Display of Display Options Command

will direct this test to all tributary data sets on its poll list. The test is set up on the diagnostic channel and conducted on the data channel. In this test the control data set sends a test message to a tributary data set which checks this message for errors. Then the tributary data set sends the test message back to the control data set with an error indication. The control data set records the errors. To run this test, the control data set will cycle through its poll list of addresses 50 times. If tests to a tributary data set contain errors on two or more occasions, the control data set will report that the test to this tributary has failed.

3.34 ***Change Multiplexer (chmx):*** This command applies to DS 2096A which has up to four ports to which the data at a line speed of 9600 bps (or 4800 bps) is multiplexed. When this command

is selected at the NC, a table of all the possible multiplex options will be displayed (shaded area, Fig. 5). From this table the operator may then choose the new multiplex combination.

3.35 All faults currently active on the local network to which the chmx command is directed will be cleared and the printer, if it is optioned on, will show the message ***all faults cleared - chmx*** for each fault. The poll list will be temporarily updated to prevent the faults from being reported during the change mux operation. After the command completes, the poll list will be updated to reflect the change. Any faults still remaining on the network will be reported.

3.36 ***Change Options (chop):*** When this command is selected at the NC, a command is sent to the addressed data set to display its options. The data set then transmits to the NC a list of the options that it currently has installed. These are then displayed at the NC as a table. With this table choices to select to change these options are displayed.

3.37 ***Change Poll List (chpl):*** When this command is selected at the NC, it will send to the data set addressed a display poll list (dspl) command. The data set will then send to the NC the contents of its poll list, which will be displayed by the NC. With this poll list several choices are displayed which can be made relating to the poll list. A new poll list may be acquired or individual addresses may be added, deleted, or arranged to be skipped in polling.

3.38 ***Circuit Loss - Inbound (cli):*** This test can be directed to a control data set to run the test with any tributary data set on its analog circuit. When this test is directed to a control data set, it will measure the received level of a tone transmitted by the tributary data set. This tone can be one of three frequencies (1004 Hz, 1804 Hz, or 2804 Hz) and is transmitted at a level of about 0 dBm for about 2.5 seconds. (The 2804-Hz frequency is not available on

```
TIME_____LOCAL_PORT_NET1_NET2_NET3_____FAULT_TYPE_________TOTAL_SYSTEM_FAULTS:10
15:22      031   1                      no response,
10:20      031   2                      no response,
10:19      021         06               no response,
10:19      021         01               facility,
10:19      021         05               no response,
```

```
enter selection: chmx
selection-2096 change mux

enter address
(local/port/net1/net2/net3): 031


            PORT 1  PORT 2  PORT 3  PORT 4
choose (1)   9600
       (2)   7200
       (3)   4800
       (4)   7200    2400
       (5)   4800    4800
       (6)   2400    2400
       (7)   4800    2400    2400
       (8)   2400    2400    2400    2400
enter choice: 4

enter selection:
```

Fig. 5—NC Display of 2096 Change Mux Command

DS 2024A). The results of the test will appear at the NC as -XX dB.

3.39 ***Circuit Loss - Outbound (clo):*** This test can be directed to a control data set to run the test with any tributary data set on its analog circuit. The control data set addressed will transmit on the data channel a tone at one of three frequencies (1004 Hz, 1804 Hz, or 2804 Hz) at a level of about 0 dBm for about 2.5 seconds. (The 2804-Hz frequency is not available on DS 2024A.) The tributary data set at the far end will measure the level of the received tone and will send the result back to the control data set via the diagnostic channel.

3.40 ***Disable/Enable (dsab):*** This command can be used to disable or enable any data set. A data set is disabled by putting it into analog loopback which disconnects the data channel transmitter and the receiver from the line, preventing the data set from disrupting data flow from other data sets. When confirmation that it has been disabled is sent back to the NC from the data set, the NC will display ***command completed.***

3.41 ***Digital Test (dt):*** This test can be directed to DS 2024 or 2048 control data sets to run to their tributary data sets. Two addresses are needed; the address of the control data set and the address of the tributary data set. To run this test, the selected control data set first tells the tributary data set via the diagnostic channel to go into digital loopback. Then the control data set transmits on the data channel a number of 100 kilobit blocks of a 511-bit pseudorandom word. The number of blocks which can be selected is from one to 32,000. While transmitting this pseudorandom word, the control data set will be checking for errors in the signal returned. If 10 or more errors are detected for one block, the test is considered to have failed. When the results are reported to the NC, it will display the result as ***PASS*** or ***FAIL*** with the total number of blocks which failed and the total number of bit errors detected. If more than four blocks are requested to be transmitted, then when polled, the control data set will give to the NC intermediate results based on four blocks.

3.42 ***End-to-End Block Error Test (ee):*** This test can be directed to any control data set to run to any tributary data set. This test is the same as the end-to-end test available from the data set front panel. From a control data set front panel, this test can only be directed to a tributary data set on the control data set analog circuit. The NC, however, can direct that this test be run to any tributary data set downstream from the control data set. The NC can request that this test involve transmitting from 1 to 32,000 test messages (blocks). In this test, the control data set transmits the tributary data set on the data channel a test message and the tributary data set checks it for errors. Then the tributary data set starts up and transmits back to the control data set the same test message with an error indication. The control data set checks this message for errors. The control data set counts the number of errored transmissions in each direction and will report the total count back to the NC at the termination of the test when polled or at 256 block intervals, if polled before the test is completed. The results are displayed at the NC. The errored blocks are reported inbound and outbound.

3.43 ***Loopback (lpbk):*** This command in the NC combines two separate test commands available from the data set front panel. These are analog loopback and digital loopback. The release command is used to take a data set out of any loopback.

3.44 ***Modem Test (mt):*** This test from the NC can be directed to any data set. When this test is selected, the data set will first go into analog loopback. Then it will start up and will transmit to itself a test message (block) 100 times. The modem test can be either single or continuous. The result of the test is either ***PASS*** or ***FAIL.*** A fail condition occurs when one test message is in error. If the continuous modem test fails, the test will terminate. If a continuous modem test is directed to a data set in a network, no faults will be reported for that network while this test is being run. Continuous modem test cannot be made part of a diagnostic and maintenance routine.

3.45 ***Service Line (sl):*** This command puts a switched network data set, which is in a multiple mounting, onto a service line to allow testing from a test center. When a data set is in the service line mode, it also will be put into the make-busy mode.

3.46 ***Send Tone (st):*** This test command can be directed to any data set. A data set directed to run this test will transmit on the data channel one of three tones at a level of about 0 dBm. The tone to be transmitted is chosen from one of the following: 1004

Hz, 1804 Hz, or 2804 Hz. (The 2804-Hz frequency cannot be directed to DS 2024A.)

B. Network Controller Commands (nc)

3.47 The network controller commands are divided into two groups: disruptive and nondisruptive (Fig. 6). These commands relate to information stored in the NC memory. The nondisruptive commands display this stored information. The disruptive commands change this information.

Nondisruptive Network Controller Commands

3.48 ***Directory Modem Profile (drmp):*** This command allows the NC user to view a list of the addresses of the data sets which have a profile stored on them. When ***drmp*** is keyed in the NC will first access its tape memory to retrieve this command. After some time the NC will display the statement ***x profiles being sorted - please wait.*** The ***x*** in the statement represents the number of data sets which have a profile. After the profiles have been sorted, the NC will display four choices: ***(1) all address, (2) local address, (3) addresses containing same local address, and (x) exit.*** The ***(1) all address*** choice causes the NC to display the address of every data set for which a profile has been made. These addresses will be displayed under four headings. The next two choices are intended to be used together to determine a more limited number of addresses. The ***(2) local address*** choice causes the NC to display only the local address portion of a complete address for every data set with a profile. If more than one data set uses the same local address in its complete address, this local address will still be displayed only once. These local addresses will be displayed under eight headings. The ***(3) addresses***

```
TIME_____LOCAL_PORT_NET1_NET2_NET3_____FAULT_TYPE_______TOTAL_SYSTEM_FAULTS:10
15:22     031   1                      no response,
15:20     031   2                      no response,
15:19     021         06               no response,
15:19     021         01               facility,
15:19     021         05               no response,

enter selection: nc
selection-network controller commands

non-disruptive                         disruptive

(drmp)    directory modem profile      (atr)      auto trouble report control
(dsdt)    display date and time        (atrf)     auto trouble report file
(dsfl)    display fault log            (bump)     backup modem profile
(dsmp)    display modem profile        (chdt)     change date and time
(dsncid)  display NC identity          (chmp)     change modem profile
(dsncop)  display NC options           (chncid)   change NC identify
(dsncpl)  display NC poll list         (chncop)   change NC options
(dsnf)    display network faults       (chncpl)   change NC poll list
(dsns)    display network status       (clfl)     clear fault list
(dsq)     display queue                (clnf)     clear network faults
                                       (fr)       fault reporting/filtering
(rdh)     restore display heading      (ncom)     NC operating mode
                                       (pw)       password commands
                                         ↑          ↑
enter selection:                       CODE       COMMAND NAME
```

Fig. 6—NC Display of Network Controller Commands

containing same local address choice causes the NC to display the complete address of those data sets with a profile using the same local address in their complete network address. Thus, this choice would most likely be made after the choice ***(2)*** was made to obtain the local addresses. These addresses will be displayed under four headings as is done when the choice ***(1)*** is made. Each time a table of addresses is displayed the NC will present the four choices described above again, so that the user can make another choice without leaving this command. The ***(x) exit*** choice allows the user to leave the command when needed.

3.49 ***Display Date and Time (dsdt):*** This command allows the user to view the current date and time recorded by the NC internal clock.

3.50 ***Display Fault Log (dsfl):*** This command causes the NC to display a list of the last 110 network faults detected. The faults are displayed in the same form they are displayed at the top of the screen. All faults, even if they no longer exist, will be shown. Each midnight, the date of the next day will be entered on the log so that the displayed faults can then be associated with a date. These faults are stored on the tape memory in groups of 10. Since this command may take several minutes to complete, it may be terminated early by depressing ***CONTROL*** and typing ***F*** on the keyboard of a DATASPEED 40/2 terminal set, or an equivalent terminal action should be taken to transmit character ***DLE***.

3.51 ***Display Modem Profile (dsmp):*** This command allows the NC user to view the profile information stored about a data set. This profile information is supplied by the user via the ***change modem profile (chmp)*** command described later. When this command is selected by keying in ***dsmp,*** the NC will ask for the address of the data set. If an address for which a profile has been established is given, the NC will then display the information. The profile information is followed by two choices ***(n)*** next address and ***(x)*** exit. If next address is chosen, the NC will again ask for another data set address. If an address is given for a data set for which no profile was made, then the NC will display ***profile not found*** followed by the choices next address and exit. The ***display modem profile*** command must be retrieved from the tape memory on which it is stored.

3.52 ***Display NC Identity (dsncid):*** This command permits a user to view the ***identity*** information stored in an NC. This identity information is stored in each NC to allow users at remote NCs to verify that connection has been made to the correct NC.

3.53 ***Display NC Options (dsncop):*** This command causes the NC to display its address and its current port options. The operating state of each port is shown with a printer port indication showing if test results will be sent to the NC at all times (continuously) or only when selected.

3.54 ***Display NC Poll List (dsncpl):*** This command causes the NC to display its poll list of local addresses. These are the local addresses of all data sets connected to the NC via the 1200 bps control channel. An indication is given with each address whether it is active or skipped. If an address is skipped, it is not polled by the NC. Therefore, the NC will not receive fault reports from that local data set and its network. The dashed number after some addresses refers to the number of ports used on DSs 2096A.

3.55 ***Display Network Faults (dsnf):*** The five most recent network faults are displayed at all times. The NC has, however, the capacity to store 50 faults. This command is used to view faults in addition to the most recent five.

3.56 ***Display Network Status (dsns):*** This command causes the NC to display the normally ignored status word translation from the network data sets. The following conditions are displayed:

- Disable mode
- Test mode
- Maintenance mode
- Standby facility
- Make busy
- Data mode (DM) off.

3.57 ***Display Queue (dsq):*** This command causes the NC to display the names of all tests, commands and routine in the "queue." This information is arranged under eight headings: ***ENTER TIME, RUN TIME, STOP TIME, SELECTION/***

NAME, ADDRESS, STATUS, TEST COUNT, and TAG. An entry is found under RUN TIME only if a routine is delayed. An entry is found under STOP TIME only if a routine is being executed on a list of addresses. In that case, the list identification number is shown under ADDRESS. The ADDRESS heading will otherwise show one or two addresses. (Two addresses because some tests require two.) Under the STATUS heading can be found five conditions: waiting, executing, delayed, running, and completed. The waiting condition indicates that the test or command is scheduled to be run but cannot yet be executed until another test or command to the same data set is completed. This situation will usually occur when a routine of tests and commands is invoked. When this occurs, the first test or command in the routine is sent to the addressed data set and the other tests and commands are put into the waiting condition in the queue. An entry under the test count heading only appears for routines. The number seen here is the number of tests and commands in the routine. The TAG heading shows an identification number from 1 to 10 for tests and commands and number from 11 to 20 for routines. This number is assigned when the test, command, or routine is selected for execution. If the letter D appears before the tag number, it means the routine has been selected to be executed ***daily.*** If the letter R appears after the tag number, this means that the routine was sent to a data set in a network connected to a ***remote*** NC or DC.

3.58 Tests and commands awaiting execution are in a test and command queue. A test and command queue can handle up to 10 entries. If the user attempts to enter more than 10 tests and commands the NC will display ***test queue full; try again.*** (Several tests and commands can be waiting to be executed because the diagnostic communications channel is congested.)

3.59 Routines have their own queue. This queue can hold up to 12 routines. When a routine of tests and commands is to be executed, it must contend for test positions in the test and command queue. If enough test positions are not available to handle the entire routine of tests and commands or the routine is associated with an address list that has not been completed, the routine will remain in the routine queue and will continue to check for available positions.

3.60 ***NC Remote DCD Commands (ncrc):*** This command was provided to support remote operation with another NC or a DC. These commands are not available in ***normal*** operating mode. To operate with a remote DCD, the user first has to configure the NC to operate in this manner by using the NC operating mode command (ncom), described later. When this command is selected, the NC will respond with three choices: one to unlock the remote DCD, another to request that the remote DCD send to the local NC its fault list, and the third to request the remote NC identity. To unlock the remote DCD, the user must give the password of a remote NC or console key code of a remote DC. When the remote NC is unlocked, the user at the local NC will be able to direct disruptive tests and commands to the remote NC data sets. When the remote NC fault list is requested, it will send to the local NC a snapshot of its list. When the remote NC identity is requested, it will send two lines of information to the local NC. The first line will read ***Network Controller Vn***, where ***n*** is the software code number. The second line will contain the variable information about the NC, entered with the NC command ***change NC identity.*** The DC will respond to the identity command by giving only its name and software version. This command will appear in the menu only when remote operation is selected.

Disruptive Network Controller Commands

3.61 ***Auto Trouble Report Control (atr):*** This command allows the user to condition his NC to automatically send a report of a detected nontransient network fault to a telephone company (telco) location. This feature is only available, if additional equipment is used. When this command is selected by the user, the NC will display first a statement to indicate if atr is currently active. Then it will display two choices: (a) activate and (d) deactivate. After a choice is made, the NC will report back the action taken. If ***atr*** is activated and a fault exists for longer than 10 minutes, the NC will attempt to send a trouble report by dialing up a designated telco location with the one-number dialer (OND). When a connection is established, the NC will dump its ***atr*** information to a receive-only printer at 300 bps. When the ***atr*** feature is selected, DS 212AR must be optioned properly so that it can automatically adjust its receiver speed to the incoming received signal. Thus, if a telco employee calls the customer NC through its TELCO port, DS 212AR will adjust its speed to that of the telco NC. It will then tell the NC what the operating speed is to be through the customer interface connector.

3.62 The customer NC will try to call the telco location up to seven times to report a detected network fault. If a fault is successfully reported, the NC will add the word ***REPORTED*** after the fault in the fault list. If the NC is not successful after seven attempts, it will add the words ***NO REPORT: BUSY.*** If the fault cannot be reported because of insufficient information in the data set profile for the data set reporting the fault, then the NC will add the words ***NOT REPORTABLE*** after the fault in the fault list.

3.63 When the ***atr*** feature is activated, the auto trouble report file command cannot be selected. If it is requested, the NC will prompt the operator to deactivate ***atr*** in order to change the atr file information.

3.64 The TELCO port may be connected directly to the ***atr*** printer using a DS 202T.

3.65 When the automatic trouble report feature is in the process of reporting a fault, certain tests and commands are not available to the NC operator. All modem tests and commands are available ***except*** the following:

- Display options (dsop)
- Display poll list (dspl)
- Change options (chop)
- Change poll list (chpl)
- Change multiplexer (chmx)
- End-to-end block error test (ee)
- Digital test (dt).

Most NC commands are not available. Those which ***are*** available are listed below:

- Display network faults (dsnf)
- Display queue (dsq)
- Auto trouble report control (atr).

Also, ***no*** diagnostic and maintenance routine commands are available. If an unavailable command is selected with the NC in the ***atr*** operating mode, the NC will display ***overlay in use; try again.***

3.66 ***Auto Trouble Report File (atrf):*** The purpose of this command is to provide a means for the customer to update the information to be sent to a telco location with ATR. The questions asked under this command are shown in Fig. 7. Some of the information needed to fill out a trouble report will be obtained from the modem profile information, supplied by using the modem profile command.

3.67 ***Change Date and Time (chdt):*** This command allows the NC user to reset the NC reference date and time. From the instant this is done, the internal clock of the NC will be set to the date and time selected and time will advance from that point. When this command is selected, the NC will first display the current date and will request the new date desired. Then the NC will display the current time and will request the new time.

3.68 ***Backup Modem Profile (bump):*** The purpose of this command is to add or to update data set profile information from a master tape cartridge onto a backup tape cartridge. This command uses the NC in an off-line mode and thus is disruptive of all NC operations. When the copy is completed, the NC must be rebooted. While a tape is being copied, the NC will automatically back up all files not presently on the backup tape cartridge. The user is required during execution of the copy routine to insert either the master or backup tape under direction from the NC.

3.69 ***Change Modem Profile (chmp):*** This command gives the NC user a way of storing information about data sets in the user's data networks. If the automatic trouble reporting (ATR) feature is to be used, a modem profile on the data set reporting the fault must be made. This profile must contain a circuit identification number and a yes answer to the ATR reporting question. All the information to be stored is user supplied, prompted by the NC. A profile can be stored on a total of 398 data sets. These data sets can be in 256 networks with up to 20 data sets per network. When this command is selected, the NC will first request the address of a data set. After the address is given, the NC will read from the tape the information stored on this data set and will display ***accessing tape — WAIT.*** If no modem profile was previously made on the data set whose address was given, the NC will display ***Profile not found*** and will give three choices: ***(a) add, (n)*** next profile and ***(x)*** exit. If a profile exists, it will be displayed as a list of questions and answers. After this profile information is shown, the five following choices are given: ***(c)*** change, ***(d)*** delete, ***(s)*** save, ***(n)*** next profile, and ***(x)*** exit.

```
TIME_____LOCAL_PORT_NET1_NET2_NET3_____FAULT_TYPE_____TOTAL_SYSTEM_FAULTS:Ø4
13:54     Ø11        65C  Ø2          facility,
13:54     Ø11        65C              facility,
13:32     Ø52                         no response,
13:32     Ø12                         no response,

enter selection: atrf
selection-auto trouble report file


accessing tape -- WAIT Ø

accessing tape -- WAIT Ø

Company name : WE
Company address : 24rey
Data processing manager : RB
Manager Tel. No. : 555-4678
NC Telco Port Tel. No. : 555-1111
Remarks : None

Enter the following information.
If no change is necessary, depress NEW LINE key

Company Name (24) = Western Electric Co., Inc.

Too many characters - enter data again.
Western Electric Co.
Company Address (49) = 24ØØ Reynolda Rd, Winston-Salem, NC
Data Processing Manager (24) = R. Balboa
Manager Tel. No. (15) = 919/555-4678
NC Telco Port Tel. No. (15) = 555-1111
Remarks (64) = None

accessing tape -- WAIT Ø

enter selection:
```

Fig. 7—NC Display of Auto Trouble Report File Command

If the change command is chosen, the NC will ask a number of questions. These questions must be responded to in some way. If new information is entered followed by a NEW LINE, this new information will be stored and later displayed. If the information previously stored is not to be changed, only the NEW LINE key should be pressed. The questions asked by the NC are the following:

- Modem type (5 characters)
- Circuit number (24 characters)

  The circuit number will be the number assigned by the telco as described in Section 795-402-100.

- Modem location (up to 57 characters)

  A response to this question is some message or note the user wishes to enter here to provide

additional information. An example of such a message is: ***NYC, 1125 1st Ave., 2nd floor, ABC Corp, in janitor's closet.***

- Site contact person (up to 20 characters)
- Phone (up to 20 characters)
- Remarks (up to 64 characters)
- ATR (3 characters) can be yes (or y) or no (or n).

3.70 ***Change NC Identity (chncid):*** This command enables the user to input information to describe the NC, so that other users of an NC connected to the local NC can ask for its identity. An example of this would occur when a telco location calls a customer NC to test one of the networks. The telco employee would verify that the correct customer was called by asking for the customer NC identity using the NC command NC remote DCD commands (ncrc).

3.71 When this change identity command is selected, the NC will first give the present identity information and then ask for the new identity information. If the user does not wish to change the informaton at this point, the user depresses the NEW LINE key. The NC must access its tape memory to obtain the identity information.

3.72 ***Change NC Options (chncop):*** The ports on the NC allow other devices to be connected to it. These devices can be a printer for hard copy, another terminal, other remote data sets, another NC, or a DC. These other devices can be located locally or remotely. If they are located remotely, they will be connected to the NC via an analog facility with data sets. This analog facility can be either 2-wire switched network or 4-wire private line.

3.73 When this command is selected, the NC will display the NC address and a table which shows the current state of the NC options, followed by a list of choices to change these options. If the user is at a remote terminal, however, he will not be given any choices, after the NC options are displayed, because these capabilities have been deliberately restricted from the remote user. The NC options displayed in the table refer to the ports available on the back of the NC. The state of operation of these ports, except the local terminal port, can be changed from the terminal. The local terminal port is always on-line and its speed of operation is selected by a dual in-line package (DIP) switch. The speed of the local terminal may be changed while the NC is operating.

3.74 When the user makes a choice of which port he wishes to change by keying in the appropriate code shown, the NC will then display more choices which relate to this port. These choices are the same for all ports except the printer port. The printer port choices will be only off-line, on-line 300 bps -, continuous, selectable, and exit. The dash is used because the printer is only connected to the NC locally and it is not necessary to refer to switched network or private line. The ***continuous*** choice causes the NC to print all test results automatically. The ***selectable*** choice causes the NC to print only the results of those tests the user selected for printing at the time the test is initiated. This is done by typing ***print*** after the command for the test. If the test or command cannot be printed, the NC will display ***selection cannot be printed.*** The exit command for both groups of choices, as always, allows the user to leave without making a choice.

3.75 After the user has made the final choice for the mode of operation of a port, the NC will then display an updated version of the option table reflecting the change just selected. This table will again be followed by a list of choices to select a port to be changed. After a choice is made, the NC will display a table of the new NC port options.

3.76 ***Change NC Poll List (chncpl):*** When this command is selected, the NC will display a list of the change poll list choices the user can make. These are (a) add, (aq)acquire, (d) delete, and (s) skip. If the (a) add, (d) delete, or (s) skip choices are made, the NC will ask the user for the local addresses to be added, deleted, or skipped. If the local data set is a DS 2096A, the number of ports used must be indicated by following the 3-digit local address with a dash and the number for the ports used.

3.77 To have the NC acquire a poll list of local addresses of data sets connected to it, the user will select ***aq.*** When this choice is made, the NC will poll all 256 possible local addresses. When a response to a poll occurs, this means that the address is being used and it is then added to the NC poll list. While the NC is polling, it will display ***acquire in progress*** and the local address being polled. While the NC is acquiring a poll list, the terminal keyboard is not available for use. This may take several minutes. To

stop the NC from acquiring a poll list, the user will key in a control character (DLE). This is done by simultaneously depressing the CONTROL and F keys. Either the local or remote terminal may acquire a poll list but not both simultaneously.

3.78 ***Clear Faults Log (clfl):*** This command removes all entries on the NC fault log. Clearing may take several minutes.

3.79 ***Clear Network Faults (clnf):*** This command causes the NC to wipe clean its entire slate of up to 50 active faults stored. The only indication given to the user that the command was executed is the disappearance of the (up to) five faults displayed at the top of the screen. (The number at the top line which indicates the total number of faults stored is reset to zero.)

3.80 ***Fault Reporting/Filtering (fr):*** This command is used to enable or disable real-time fault reporting to the NC and to specify any of the three types of fault filtering. If fault reporting is enabled the user is given a table of possible combinations of fault filtering (Fig. 8). The choices are: Two ***fault timers*** of 3 minutes each; one for the printer and one for the fault log. When ***in*** either timer delays reporting of the fault (to the printer or fault log) for 3 minutes. When ***out*** reporting is done immediately. The last choice allows the user to inhibit reporting of certain ***no response*** (NR) faults from DSs 2024A. When this ***G2 NR Fault Suppression*** is ***in*** no faults of this type are reported.

3.81 ***NC Operating Mode (ncom):*** This command allows the NC user to configure the NC to operate ***normally*** (ie, to be able to issue tests and commands to its own data sets on the control channel) or ***remotely*** (ie, to be able to issue tests and commands to a remote DCD's data sets). When an NC is operating remotely it cannot select any of the NC commands or routine commands of the remote NC. The network faults detected by the NC data sets connected to its control channel will continue to be displayed on the top of the terminal screen. When the code ***ncom*** is keyed in, two choices will be displayed as shown in Fig. 9. If the (r) remote DCD operating mode is chosen, the NC will respond with a statement to indicate if its network port is activated and a data link has been established to the remote NC.

3.82 To transmit modem tests and commands to another NC, the local NC must have its network (NET) port activated, properly configured, and a data link established between the local NC and the remote NC. The NCs can only transmit through their network port, but can receive through their network or telco ports. When two NCs are connected together through their network ports, both can simultaneously transmit to each other.

3.83 A disruptive modem test or command cannot be sent to a remote DCD's data sets if the remote DCD's port is locked. If this is attempted the NC will display ***remote DCD is locked.***

3.84 ***Password Commands (pw):*** This command provides for locking and unlocking the NC and for changing the password itself. To perform any of these functions the existing password must be given. (Each system program 100B data cartridge is shipped from the factory with ***plato*** as password.) When locked, the NC will perform only ***nondisruptive*** tests, commands, or routines.

C. Diagnostic and Maintenance Routines and Lists (dmr)

3.85 This group of commands (Fig. 10) is used to create, display, or delete ***routines*** and ***lists*** and to execute routines. A ***routine*** is a grouping of tests or commands which is identified by a name (containing one to seven printable characters) and can be selected at any time for transmission to a specific data set. This name is used to call up a routine to display, to execute, or to delete it. Routines, however, cannot be edited. Up to 15 routines can be created. When a routine is created, addresses are not asked for, because the routine of tests and commands can be sent to any data set when execution is requested by the user. A ***list*** is a collection of data set addresses identified by a number from one to ten. Each list may contain any number of data set addresses provided that the total number for all ten lists together is 128 or less. Once a list is created, more addresses can be added to it, an individual address can be changed or deleted, or the list may be deleted entirely.

3.86 A routine can be directed to execute to every data set address in a specific list. When a routine is executed in this way, a stopping time must be provided by the user.

3.87 ***Change List (chl):*** This command is used to create, modify, and delete lists of data set addresses. The choices available when the chl command

```
TIME_____LOCAL_PORT_NET1_NET2_NET3_____FAULT_TYPE_______TOTAL_SYSTEM_FAULTS:Ø2
17:59     Ø13                          no response,
17:59     Ø11        Ø1                modem,
```

```
enter selection:  fr

selection - fault reporting/filtering

enter password:

Status: Fault reporting - enabled
        Fault filtering options
           Fault timer for printer - in
           Fault timer for 'fault log' - in
           G2 NR fault suppression - out

For fault reporting
choose  (d) disable
        (e) enable
        (x) exit

enter choice:  e

Fault reporting enabled

For fault filtering options
                    Fault Timers          G2 NR Fault
                 Printer    Fault Log     Suppression
                  in  out     in  out       in    out

                  __  ___     __  ___       __    ___
choose    (1)     x           x             x           (1)
          (2)     x           x                   x     (2)
          (3)     x               x         x           (3)
          (4)     x               x               x     (4)
          (5)         x       x             x           (5)
          (6)         x       x                   x     (6)
          (7)         x           x         x           (7)
          (8)         x           x               x     (8)
          (x)  exit

enter choice:  2

accessing tape -- WAIT Ø

Fault timers
   Printer - in
   Fault log - in
G2 NR fault suppression - out

enter selection:
```

Fig. 8—NC Display of Fault Reporting/Filtering Command

```
TIME_____LOCAL_PORT_NET1_NET2_NET3_____FAULT_TYPE_____TOTAL_SYSTEM_FAULTS:1Ø
15:22     Ø31   1                      no response,
15:2Ø     Ø31   2                      no response,
15:19     Ø21         Ø6               no response,
15:19     Ø21         Ø1               facility,
15:19     Ø21         Ø5               no response,
```

```
enter selection: ncom
selection-NC operating mode

accessing tape -- WAIT Ø

Current  NC operating mode - normal

Network          port is not connected

choose (n)  normal operating mode
       (r)  remote DCD operating mode
enter choice:
```

Fig. 9—NC Display of NC Operating Mode

```
TIME_____LOCAL_PORT_NET1_NET2_NET3_____FAULT_TYPE_____TOTAL_SYSTEM_FAULTS:Ø4
1Ø:34     Ø21         Ø1               facility,
1Ø:34     Ø21                          facility,
1Ø:16     Ø11         Ø1               facility,
1Ø:16     Ø11                          facility
```

```
enter selection:  dmr
selection-diagnostic and maintenance routines

(chl)        change list
(cr)         create routine
(dldr)       delete delayed routines
(dlr)        delete routine
(dsl)        display list
(dsld)       display list directory
(dsr)        display routine
(dsrd)       display routine directory
(er)         execute routine

enter selection:
```

CODE COMMAND

Fig. 10—NC Display of Diagnostic and Maintenance Routines Commands

is executed are: ***(a) append list*** used to add addresses to an existing list, ***(c) change list*** to change an address on an existing list, ***(d) delete list*** to delete an address from an existing list, ***(n) new list*** to create a new list of addresses, and ***(x) exit*** to leave the command.

3.88 Changing a list is not permitted when the list is being used. This extends to delayed routines not actually executing but scheduled to execute with a list. The delayed routine must execute or be deleted before the list may be modified.

3.89 ***Create Routine (cr):*** This command allows the NC user to make a routine containing a number of tests and commands. When this command is selected, the NC will search the routine directory stored on tape to see if there is room for another routine. If there is no room, the NC will display ***routine directory list is full.*** If the directory has room for another routine, the NC will display a request for the name of the new routine. After the user selects a name, the NC will then check it to see if it contains the required one to seven printable characters and if it were used before. If there is some problem with the name, the NC will indicate this by one of the following statements:

- Routine by that name previously defined
- No special characters allowed
- Routine name too long.

3.90 If a valid and unique name is chosen, the NC will display ***enter routine selection:.*** The user will then key in the code for the first test or command. Certain tests and commands, however, ***will not*** be allowed. These are:

- Continuous modem test (mt,c)
- Abort test (abt)
- Change options (chop)
- Change poll list (chpl)
- All network controller commands
- All diagnostic and maintenance routine commands.

3.91 ***Delete Delayed Routines (dldr):*** This command allows an NC user to delete any routine which is in the delayed routine queue. When this command is selected, the NC will first access its tape memory to retrieve this command. Then the NC will ask for the tag number of the routine to be deleted. After the tag number is entered, the NC will display the same queue table shown when the command ***display queue (dsq)*** is selected. Under the table the NC will display two choices: ***(d) delete*** and ***(x) exit.*** If the routine contains a test or command which is disruptive and the NC is locked, it will request the password before deleting the delayed routine.

3.92 ***Delete Routine (dlr):*** This command allows an entire routine of tests and command to be deleted. This is done simply by keying in the routine name. When the code for this command ***(dlr)*** is keyed in, the NC will respond with ***selection-delete routine*** and ***enter routine name:.*** After the name is given, the NC will confirm the deletion only by displaying ***enter selection:*** to indicate that it is ready for another command.

3.93 ***Display List (dsl):*** This command displays all the address entries in the list and indicates whether or not the list is in use.

3.94 ***Display List Directory (dsld):*** This command causes the NC to display a summary of all the lists that exist. For each list shown, the number of addresses in the list and the number of routines which are scheduled to execute with the list are also shown.

3.95 ***Display Routine (dsr):*** This command causes the NC to display all the tests and commands that exist in a given routine.

3.96 ***Display Routine Directory (dsrd):*** This command causes the NC to display a list of the routine names it has stored. When this command is selected by keying in ***(dsr),*** the NC will display ***enter routine name:.*** After the user keys in the name, the NC will read its tape memory to search for the name given. When the routine is found, the NC then will display all the tests and commands in the routine. After all the tests and commands are displayed, the NC will display ***enter selection:.*** Since the NC handles ***(qr)*** for quit routine as another selection, this selection will always appear at the end of the list of tests and commands displayed under a routine.

3.97 ***Execute Routine (er):*** When this command is selected, the NC will request the name

of the routine to be executed. After the routine name is given, the NC will access its tape memory to search for the routine requested. After the routine is retrieved, the NC prompts the user to specify when the routine should be run. The choices are to execute the routine immediately, to delay it, to execute immediately and repeat it every 24 hours, or to delay it and then repeat it every 24 hours. Then the NC will analyze the routine to see if it contains a disruptive test or command. If the NC is locked and the routine does have a disruptive test or command, then it will request that the password be given before it will allow the routine to be executed. When the password is given, the NC will prompt the user to specify whether the routine should be executed to a single address or to a list. If a list is desired, the user must give a stopping time beyond which the routine will not be executed. If the routine was delayed, the user must supply the time at which it should be executed.

291A POWER UNIT

3.98 This power supply accepts the customer-provided 115 ac volts and produces dc voltage for use within the NC. The 291A power unit also provides ac voltage for the NC cooling fans.

KS-21447, L10 MINIRECORDER

3.99 This device accepts the 100B data cartridge on which the system program is stored. In addition, the minirecorder can store customer specified files of network information on the data cartridge.

SECURITY

3.100 There are two types of security provided by the NC for the user. One deals with local security and the other with remote access security. These features are described below:

3.101 ***Local Terminal Security:*** The operator of the DATASPEED 40/2 terminal set (or equivalent) connected to the NC via the LT port must provide the appropriate password to execute any ***disruptive*** tests or commands if the NC is locked. (Each system program 100B data cartridge is shipped from the factory with ***plato*** as password.)

3.102 ***Remote Terminal Security:*** Operation through the three remote ports (RT, NET, and TELCO) involves a 2-step security check as follows:

(1) The appropriate remote port on the NC must be enabled by the local operator.

(2) To gain access to the disruptive tests and commands, the remote NC operator must unlock the port through which the access was gained. To do this the remote operator must use the password of the local NC. After entering the correct password, the remote device operator can enter control and reconfiguration commands into the data set network associated with the NC. This 2-step security check applies whenever access to the NC is gained via a remote access port; ie, it does not matter whether the port is connected to a data set link for remote access or to a converter cord for local access.

3.103 Not all NC commands are available to a remote terminal operator. The following NC commands ***cannot*** be executed from a remote terminal:

- NC remote DCD commands (ncrc)
- Auto trouble report control (atr)
- Auto trouble report file (atrf)
- Change date and time (chdt)
- Change modem profile (chmp)
- Change NC identity (chncid)
- Change NC options (chncop)
- NC operating mode (ncom).

If any of these commands are selected, the NC will display on the remote terminal screen ***selection not executable from Remote Terminal.***

ADDRESSING

3.104 Communication between the NC and the data sets on any selected network is via addresses that are assigned at installation time. These addresses allow the user to communicate with any data set on a network via the local data sets that are connected to the NC.

3.105 There are four types of device addresses used by DATAPHONE II service devices to communicate with each other. These are described below:

- ***Diagnostic Control Device Address (1 digit):*** This address permits communication

to exist between a particular DCD and the directly connected data sets. A directly connected data set must know to which DCD to send test and command results as more than one DCD may be connected on a 1200-bps serial control channel.

- ***Local Address (3 digits):*** This address is used by the NC user to access a specific local data set and hence a specific network. This address consists of three digits and is set via a DIP switch on the stand-alone and multiple data set mountings. The local address is derived by arranging data sets in groups of 8 with an upper limit of 32 groups possible for a total of 256 possible local addresses. The first two digits of the local address specify the group the local data set is in and the last digit is the position within the group (eg, for local address 237 the local data set is in group 23 position 7). The first two digits may be any number from 01 through 32. The last digit may be any number from 1 through 8. Therefore, to provide 256 local addresses the largest address will be 328. Since the local address is used to directly access the local data set, it is not necessary to specify the network address of that data set.
- ***Port Address (1 digit):*** For those networks that use DSs 2096A in the multiplexer mode the port number must be specified. This address consists of one digit and will be 1, 2, 3, or 4.
- ***Network Address (2 digits):*** This address is contained within the data set and is set via the command menu of each data set. It is using this address that data sets on a network diagnostically communicate with each other. Range of addresses is 01 through 80. Tributary data sets use addresses 01 through 64.

4. OPERATION

4.01 This part contains procedures for carrying out NC operations from the front panel and from the required DATASPEED 40/2 keyboard-display terminal (or equivalent).

START-UP PROCEDURES - *BOOTING* THE SYSTEM PROGRAM

4.02 The process of reading the system program from the 100B data cartridge into the NC internal memory is called ***booting.***

STEP	ACTION	VERIFICATION
1	Ensure the ON-LINE/OFF-LINE switch is in OFF-LINE. Insert the system program 100B data cartridge into the KS-21447, L10 minirecorder.	
2	Place the ON-LINE/OFF-LINE switch to ON-LINE. Depress and ***hold*** BOOT and momentarily depress and release RESET. Release BOOT.	TAPE STATUS red ***and*** green LEDs light. CONTROLLER STATUS red LED lights. TAPE STATUS changes to GREEN. TAPE IN MOTION and UNIT SELECT LEDs light. ON-LINE LED lights. CONTROLLER STATUS green LED lights. On the DATASPEED 40/2 terminal screen SYSTEM TEST and then LOADING and the software version (2.7) are displayed. As the system program is read from

the 100B data cartridge into memory (and after a short delay), the following occurs:

•The audible tone on the terminal is heard at intervals.

•The curser beam on the terminal display moves across the screen in steps at the same interval as the audible tones.

•The TAPE IN MOTION and UNIT SELECT LEDs flash in intervals as the files are read.

•CONTROLLER STATUS and TAPE STATUS green LEDs light. The terminal displays ***accessing tape—WAIT 0*** then ***Network Controller ID*** and software version information.

•Refer to Fig. 11 for ***INTRODUCTION*** display.

4.03 Rebooting of the system program from the 100B data cartridge will be required if service is interrupted by a power failure. When a boot is successful, the information stored on the tape has been transferred to the NC memory, ready for use. Should a reboot be required, for whatever reason, not all NC operating information is lost. The NC will store on tape and will retain after a boot the poll list of local addresses and the port options. This information will not have to be restored after a boot. However, the user password is not stored on the tape and is lost. The factory supplied password ***plato*** will be stored. Other things are lost when the NC is booted. Tests and commands queued for execution are lost. The date and time is also lost and must be restored. Faults in the buffer memory waiting to be transferred to the tape memory for the fault log are also lost. After the NC is booted, it starts operation in the normal mode with ATR not activated.

NETWORK FAULT REPORTING AND DISPLAY

4.04 Faults appearing on the network connected to the NC are reported and displayed automatically. The top portion of the terminal display screen is always reserved for this information (Fig. 12). Up to 5 of the latest faults may be displayed on the display screen in the order in which they were received, the most recent on top. Up to 50 faults (including the 5 being displayed) may be stored in a ***fault list*** in the NC internal memory. All faults may be examined by selecting the display network faults command (dsnf).

4.05 When a new fault is detected by the NC an audible tone will be heard on the terminal to alert users. There are four kinds of faults reported. These are:

- Data set failure (modem)
- Facility failure (facility)
- Streaming terminal (streaming)
- No response on control or diagnostic channel (no response).

The terminal display screen will show (Fig. 12) from left to right: the time the fault was detected, the address of the data set which originally detected the fault, and the fault type.

```
Network Controller V2.7                                  DATE 01/01/80
BTL HOLMDEL, NJ                                          TIME 00:00
                              INTRODUCTION

.Welcome to the DATAPHONE II service Network Controller (NC)

.The NC's test and command features are organized into function categories.
 The basic display format includes a list of these categories. To display a
 category, when 'enter selection:' appears enter the abbreviation appearing
 in parentheses next to the desired category and depress NEW LINE.

.Whenever 'enter selection:' appears you can enter the abbreviation of a
 test/command from any function category. After entering the abbreviation
 depress NEW LINE. If additional input is required, prompts will appear.

.Depressing NEW LINE when 'enter selection:' appears will list the basic
 function categories.

             ************* OPERATOR CHECKS ***********

  1. Check date and time above and reset if necessary using 'chdt' command.
  2. The password has been reset to 'plato'. If desired, use 'pw' command
     to change the password.
             ******* Depress NEW LINE to proceed ******
```

Fig. 11—NC *INTRODUCTION Display*

```
TIME_____LOCAL_PORT_NET1_NET2_NET3_____FAULT_TYPE_______TOTAL_SYSTEM_FAULTS:Ø4
14:55     Ø11        Ø1               modem, REPORTED
14:54     Ø13                         no response, NOT REPORTABLE
14:54     Ø11        Ø2               no response, REPORTED
14:53     Ø11                         facility, NO REPORT:BUSY
```

Fig. 12—NC Display of Real-Time Diagnostic Fault Display

4.06 If a printer is connected to the NC through the PTR port and enabled, all faults detected by the NC will also be printed.

GENERAL INFORMATION FOR USING "DATASPEED" 40/2 TERMINAL SET (OR EQUIVALENT) TO OPERATE THE NC

4.07 The NC is operated via the terminal (Fig. 13) connected to its local terminal (LT) port. Another terminal can be used to connect to the remote terminal (RT) port. The terminal to be used with the NC will have a display screen and a keyboard. The screen is used to display the information obtained by the NC by polling (monitoring) or running tests. The screen will display all information about data sets or the NC itself requested by the operator. On the screen also will be displayed ***prompts*** (appropriate questions) to help provide the correct information to supply needed data or to direct tests and commands.

> ***Note:*** For detailed information on how to use the terminal connected to your NC, refer to the terminal's user manual. Only terminal use related to the NC will be described here.

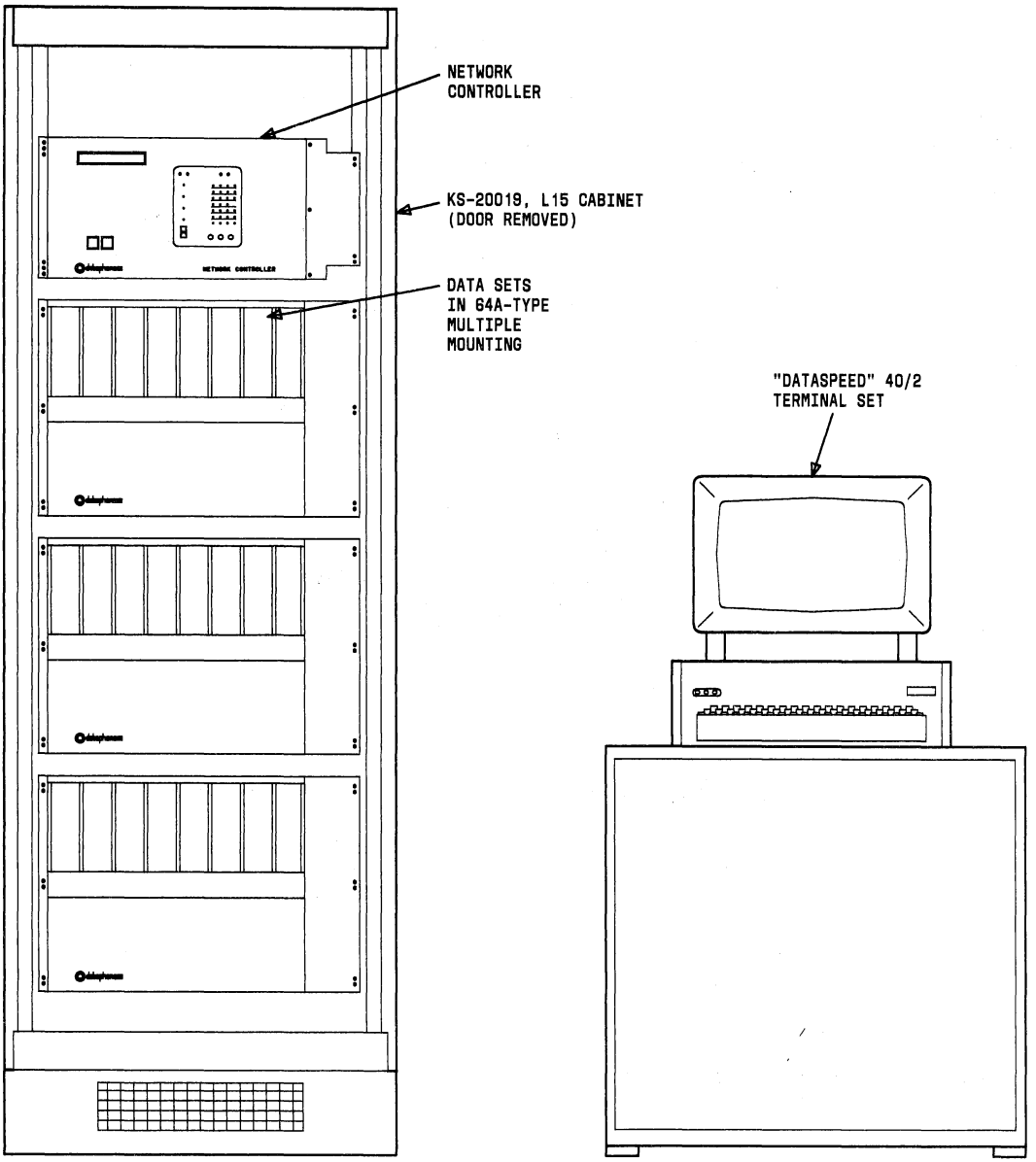

Fig. 13—View of NC, Data Sets, and DATASPEED 40/2 Terminal Set

A. Terminal Display Screen

4.08 The display screen of the terminal used is capable of displaying 24 lines of 80 characters. One full screen of 24 lines is called a ***page.*** The terminal can store in its local memory three pages of information. To view pages other than those shown, the scrolling keys on the keyboard must be used (see below).

4.09 The top seven lines of page 1 are reserved to display the last five faults detected by the NC when polling the data sets connected to it. The first line, which shows the headings for the subsequent faults, is ***protected.*** Protected characters such as these are unaffected by any keyboard operations. The next five lines show the last five faults detected, if they exist, with the latest first. The seventh line is a protected line of dashes to separate the faults from the rest of the screen below, which is used for displaying the prompts and typed-in information. The first seven lines containing the faults can be referred to as the fault field. The rest of the three pages of displayed information can be called the active or working field (Fig. 14).

B. Terminal Keyboard

4.10 The keyboard of the DATASPEED 40/2 terminal set (Fig. 15) has several keys which have special functions. These keys and their functions are described below:

Backspace and Erase Key

4.11 The backspace and erase key (Fig. 15) is used to backspace on a line and erase characters previously typed.

Scrolling Control Keys

4.12 To operate the scrolling control keys the terminal must be in the local mode. To place the terminal in the local mode, depress S/R and observe that the S/R LED extinguishes and the LOCAL LED lights.

> ***Caution: Do not depress the LOCAL key to enter the local mode. (When a remote terminal is connected to the NC via a switched-network data link, the call will be dropped if the LOCAL key is depressed.)***

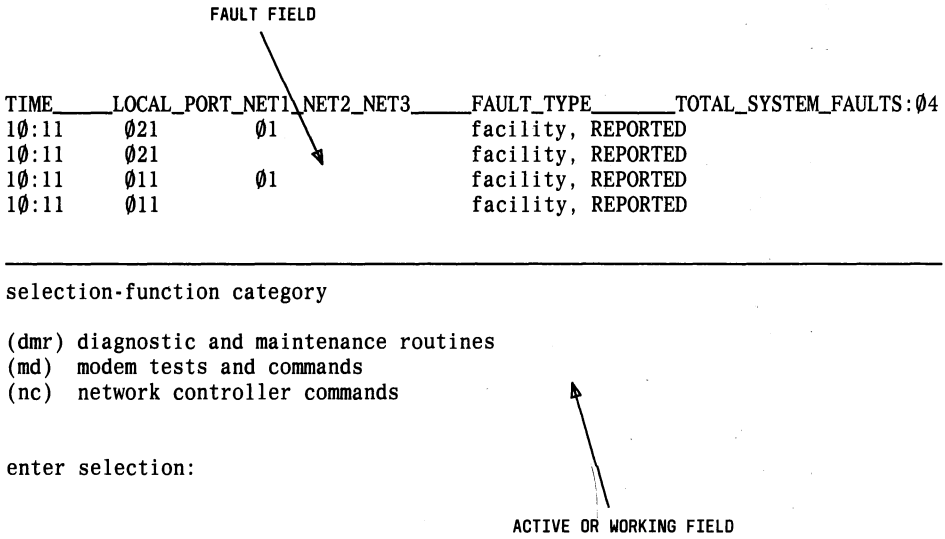

Fig. 14—Typical NC Display Showing Fault Field and Active or Working Field

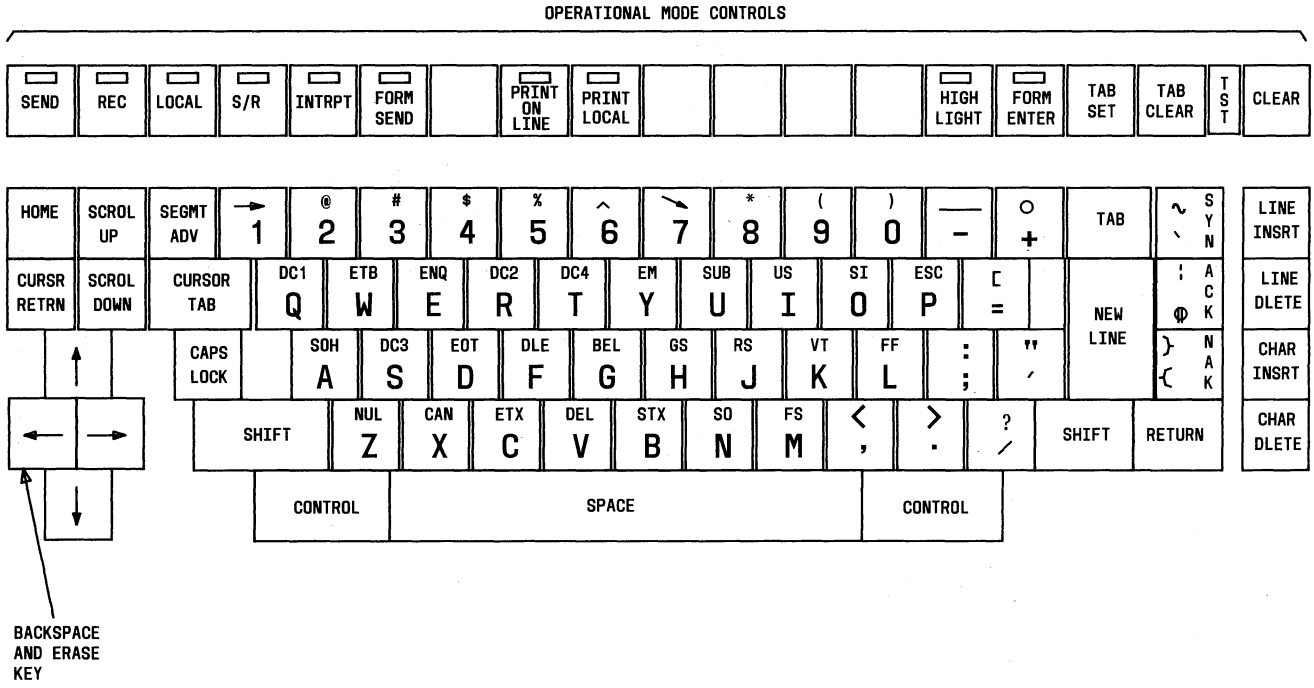

Fig. 15—DATASPEED 40/2 Terminal Set Keyboard

4.13 To scroll through the three pages of stored display information use the SCROL UP or SCROL DOWN keys. Holding either key depressed will cause the lines of information on the pages to roll through the display until all lines on the three pages are seen. Continued depressing will cause the display to start over.

New Line and Carriage Return Control Keys

4.14 The DATASPEED 40/2 terminal uses the NEW LINE or RETURN key to cause typed-in information to be accepted by the NC.

C. Model 43 Teleprinter (or Equivalent)

4.15 If Model 43 Teleprinter or equivalent is connected, it may be designated to receive test results on a continuous or selectable basis. The ***continuous*** choice causes the NC to print all test results automatically. The ***selectable*** choice causes the NC to print only the results of those tests the user selected for printing at the time the test is initiated. This is accomplished by typing ***print*** preceded by a ***space after*** the code for the test or command.

PRINT COMMAND

4.16 With the printer in the ***selectable*** mode, typing ***print*** (preceded by a space) following the test or command causes the result to be printed.

GENERAL NC OPERATING PROCEDURES WITH EXAMPLE OF "LONG" (COMPLETE) PROCEDURE

4.17 Typing NEW LINE or RETURN keys when the screen is displaying ***enter selection:*** as the last line, the three categories of tests and commands available to the NC will be displayed (shaded area, Fig. 16).

4.18 If the code (shown in parentheses) adjacent to any category is typed (example, shaded area, Fig. 17) a complete list of tests and commands in the selected category will be displayed (example, shaded area, Fig. 18). Preceding each test or command name a code will be shown in parentheses.

4.19 Typing in the test code (example, shaded area, Fig. 19) causes the ***Current NC Port Options*** to display (shaded area, Fig. 20). The first choice involves the port to be acted upon (example, shaded area, Fig. 21).

> ***Note:*** At any time during these proceedings when it is offered, the exit choice ***(x)*** may be taken and the NC will return the operator to ***enter selection:***. In cases where an exit choice (x) is ***not*** offered, typing in the entire word ***exit*** will cause the NC to return to ***enter selection:***. As an example, the word ***exit*** may be used when an operator is involved in a test or command ***not*** offering an exit choice but which the operator wishes to leave.

4.20 The second choice offered (after ***p*** is typed) specifically addresses the subject port (shaded

```
TIME_____LOCAL_PORT_NET1_NET2_NET3_____FAULT_TYPE_____TOTAL_SYSTEM_FAULTS:1Ø
15:22     Ø31   1                      no response,
15:2Ø     Ø31   2                      no response,
15:19     Ø21         Ø6               no response,
15:19     Ø21         Ø1               facility,
15:19     Ø21         Ø5               no response,
selection-function category

(dmr)  diagnostic and maintenance routines
(md)   modem tests and commands
(nc)   network controller commands

enter selection:
```

Fig. 16—NC Operation Example - 1

```
TIME_____LOCAL_PORT_NET1_NET2_NET3_____FAULT_TYPE_____TOTAL_SYSTEM_FAULTS:1Ø
15:22     Ø31   1                      no response,
15:2Ø     Ø31   2                      no response,
15:19     Ø21         Ø6               no response,
15:19     Ø21         Ø1               facility,
15:19     Ø21         Ø5               no response,
```

```
selection-function category

(dmr)  diagnostic and maintenance routines
(md)   modem tests and commands
(nc)   network controller commands

enter selection: nc
```

Fig. 17—NC Operation Example - 2

```
TIME_____LOCAL_PORT_NET1_NET2_NET3_____FAULT_TYPE_____TOTAL_SYSTEM_FAULTS:1Ø
15:22     Ø31   1                      no response,
15:2Ø     Ø31   2                      no response,
15:19     Ø21         Ø6               no response,
15:19     Ø21         Ø1               facility,
15:19     Ø21         Ø5               no response,
```

```
selection-network controller commands

non-disruptive                        disruptive

(drmp)    directory modem profile     (atr)     auto trouble report control
(dsdt)    display data and time       (atrf)    auto trouble report file
(dsfl)    display fault log           (bump)    backup modem profile
(dsmp)    display modem profile       (chdt)    change date and time
(dsncid)  display NC identify         (chmp)    change modem profile
(dsncop)  display NC options          (chncid)  change NC identity
(dsncpl)  display NC poll list        (chncop)  change NC options
(dsnf)    display network faults      (chncpl)  change NC poll list
(dsns)    display network status      (clfl)    clear fault list
(dsq)     display queue               (clnf)    clear network faults
(rdh)     restore display heading     (fr)      fault reporting/filtering
                                      (ncom)    NC operating mode
                                      (pw)      password command

enter selection:
```

Fig. 18—NC Operation Example - 3

```
TIME_____LOCAL_PORT_NET1_NET2_NET3_____FAULT_TYPE_____TOTAL_SYSTEM_FAULTS:1Ø
15:22     Ø31   1                      no response,
15:2Ø     Ø31   2                      no response,
15:19     Ø21         Ø6               no response,
15:19     Ø21         Ø1               facility,
15:19     Ø21         Ø5               no response,
```

```
selection-network controller commands

non-disruptive                        disruptive

(drmp)    directory modem profile     (atr)      auto trouble report control
(dsdt)    display date and time       (atrf)     auto trouble report file
(dsfl)    display fault log           (bump)     backup modem profile
(dsmp)    display modem profile       (chdt)     change date and time
(dsncid)  display NC identify         (chmp)     change modem profile
(dsncop)  display NC options          (chncid)   change NC identity
(dsncpl)  display NC poll list        (chncop)   change NC options
(dsnf)    display network faults      (chncpl)   change NC poll list
(dsns)    display network status      (clfl)     clear fault list
(dsq)     display queue               (clnf)     clear network faults
(rdh)     restore display heading     (fr)       fault reporting/filtering
                                      (ncom)     NC operating mode
                                      (pw)       password commands

enter selection: chncop
```

Fig. 19—NC Operation Example - 4

area, Fig. 22). Making the second choice (shaded area, Fig. 23) brings up the new ***Current NC Port Options*** display (Fig. 24) showing the new printer port status (shaded area, Fig. 22).

GENERAL NC OPERATING PROCEDURES WITH EXAMPLE OF "SHORT" (CONDENSED) PROCEDURE

4.21 This shortened version of NC operating procedure may be used if the ***answers*** to the prompts or questions are known in advance. These answers may be given on a single typed line with each separated by a semicolon.

4.22 Continuing with the above example, the short procedure would be typed in as: ***chncop;p;1*** NEW LINE (shaded area, Fig. 25). The NC would then display the ***revised*** table as shown in Fig. 25. An example of a short procedure for a test is shown in Fig. 26. If only a portion of the correct answers are known, the NC will accept all correct answers up to the first incorrect or missing answer and will then ask the remaining questions to complete the sequence. To delay execution of a test or command, type ***delay*** preceded by a ***space*** after the code for the test or command.

To exit a test or command during the prompt-response sequence type in EXIT followed by depressing NEW LINE.

MODEM TESTS AND COMMANDS OPERATION

A. Nondisruptive Modem Tests and Commands

4.23 ***Display Modem Status (dsms):*** An illustration of the basic prompt and response sequence required to execute command ***dsms*** is shown in Fig. 27. This figure illustrates a completed command. The short form of the procedure may be employed.

4.24 ***Display Options (dsop):*** An illustration of the basic prompt and response sequence re-

```
TIME_____LOCAL_PORT_NET1_NET2_NET3_____FAULT_TYPE_____TOTAL_SYSTEM_FAULTS:1Ø
15:22     Ø31   1                      no response,
15:2Ø     Ø31   2                      no response,
15:19     Ø21         Ø6               no response,
15:19     Ø21         Ø1               facility,
15:19     Ø21         Ø5               no response,
```

```
selection-change NC options

accessing tape -- WAIT Ø
          Current NC Port Options

NC address: 7

     Port          Status     Speed    PL/DDD
Local Terminal   On-Line     12ØØ bps    –
Remote Terminal  On-Line     12ØØ bps    DDD
Telco            On-Line      3ØØ bps    DDD
Network          On-Line     12ØØ bps    DDD
printer          On-Line      3ØØ bps    –    selectable

choose (r) Change Remote Terminal Port Options
       (t) Change Telco Port Options
       (n) Change Network Port Options
       (p) Change Printer Port Options
       (x) exit

enter choice:
```

Fig. 20—NC Operation Example - 5

quired to execute command ***dsop*** is shown in Fig. 28. This figure illustrates a completed command. The short form of the procedure may be employed.

4.25 ***Display Poll List (dspl):*** An illustration of the basic prompt and response sequence required to execute ***dspl*** is shown in Fig. 29. This figure also illustrates the display used when a selection is not stored in the NC internal memory but rather on the 100B data cartridge. The display used during the time when the information is being read is shown in the shaded area. Figure 29 illustrates a completed procedure, the short form of which may be used.

4.26 ***EIA Status (eia):*** An illustration of the basic prompt and response sequence required to execute ***eia*** is shown in Fig. 30. This figure illustrates a completed procedure, the short form of which may be used.

4.27 ***Identity (id):*** An illustration of the basic prompt and response sequence required to execute ***id*** is shown in Fig. 31. This figure illustrates a completed procedure, the short form of which may be used.

4.28 ***Receive Signal Level (rsl):*** An illustration of the basic prompt and response sequence required to execute ***rsl*** is shown in Fig. 32. The short form of this procedure may be used.

4.29 ***Receive Signal Quality (rsq):*** An illustration of the basic prompt and response sequence required to execute ***rsq*** is shown in Fig. 33. The short form of this procedure may be used.

4.30 ***Report Terminal Power (rtp):*** An illustration of the basic prompt and response sequence required to execute ***rtp*** is shown in Fig. 34. The short form of this procedure may be used.

```
TIME____LOCAL_PORT_NET1_NET2_NET3_____FAULT_TYPE_____TOTAL_SYSTEM_FAULTS:1Ø
15:22     Ø31   1                     no response,
15:2Ø     Ø31   2                     no response,
15:19     Ø21         Ø6              no response,
15:19     Ø21         Ø1              facility,
15:19     Ø21         Ø5              no response
```

```
selection-change NC options

accessing tape -- WAIT Ø
         Current NC Port Options

NC address: 7

     Port         Status     Speed    PL/DDD
Local Terminal  On-Line    12ØØ bps    -
Remote Terminal On-Line    12ØØ bps    DDD
Telco           On-Line     3ØØ bps    DDD
Network         On-Line    12ØØ bps    DDD
printer         On-Line     3ØØ bps    -    selectable

choose (r) Change Remote Terminal Port Options
       (t) Change Telco Port Options
       (n) Change Network Port Options
       (p) Change Printer Port Options
       (x) exit

enter choice: p
```

Fig. 21—NC Operation Example - 6

4.31 ***Signal Profile (sp):*** An illustration of the basic prompt and response sequence required to execute ***sp*** is shown in Fig. 35. The short form of this procedure may be used.

B. Disruptive Modem Tests and Commands

4.32 ***Abort Test (abt):*** An illustration of the basic prompt and response sequence required to execute ***abt*** is shown in Fig. 36. The short form of this procedure may be used.

4.33 ***Automatic Network Test (auto):*** An illustration of the basic prompt and response sequence required to execute ***auto*** is shown in Fig. 37. The short form of this procedure may be used.

4.34 ***2096 Change Mux (chmx):*** An illustration of the basic prompt and response sequence required to execute ***chmx*** is shown in Fig. 38. The short form of this procedure may be used.

4.35 ***Change Options (chop):*** An illustration of the initial sequence for ***chop*** is shown in Fig. 39. The ***current options*** table and ***choose*** selections are also illustrated.

4.36 If the operator chooses to add options to the displayed list, ***a*** should be keyed in. The NC will respond with a request that the operator enter the options desired. This is done by keying in an alphanumeric code for each option separated by a comma, such as A1,A3,B3,B6,E4,F1 ***or*** a1,a3,b3,b6,e4,f1 (Fig. 39). These new options will not yet be sent to the data set. They will only be stored and the display will be changed to show them (Fig. 40). To send the new option set to the data set, the user must choose transmit (***t***). When this is done, the new option set is transmitted to the data set which will clear its present

```
TIME_____LOCAL_PORT_NET1_NET2_NET3_____FAULT_TYPE_____TOTAL_SYSTEM_FAULTS:1Ø
15:22     Ø31   1                      no response,
15:2Ø     Ø31   2                      no response,
15:19     Ø21         Ø6               no response,
15:19     Ø21         Ø1               facility,
15:19     Ø21         Ø5               no response
```

```
selection-change NC options

accessing tape -- WAIT Ø
         Current NC Port Options

NC address: 7

     Port         Status      Speed    PL/DDD
Local Terminal  On-Line     12ØØ bps    -
Remote Terminal On-Line     12ØØ bps    DDD
Telco           On-Line      3ØØ bps    DDD
Network         On-Line     12ØØ bps    DDD
printer         On-Line      3ØØ bps    -     selectable

choose (r) Change Remote Terminal Port Options
       (t) Change Telco Port Options
       (n) Change Network Port Options
       (p) Change Printer Port Options
       (x) exit

enter choice: p
```

```
          Change Printer Port Options

     Port
choose (1)       Status    Speed    PL/DDD
       (2)       Off-Line
       (3)       On-Line   3ØØbps    -
       (c)       continuous
       (s)       selectable
       (x)       exit
enter choice:
```

Fig. 22—NC Operation Example - 7

option list and then will replace it with this new set. This transmit command is similar to the DATAPHONE II data set front panel command ***CHOP.***

4.37 To delete options, the procedure is the same as the add options procedure. The stored (***s***) choice causes the set of options displayed to be permanently stored in the NC.

4.38 ***Change Poll List (chpl):*** An illustration of the initial sequence for ***chpl*** is shown in Fig. 41. The procedure to add or to delete poll addresses is handled in the same way as the procedure to add or to delete options (above).

4.39 The acquire poll list command causes a data set to poll all possible network addresses allowed to determine which are used and, therefore,

```
TIME_____LOCAL_PORT_NET1_NET2_NET3_____FAULT_TYPE_____TOTAL_SYSTEM_FAULTS:1Ø
15:22     Ø31   1                      no response,
15:2Ø     Ø31   2                      no response,
15:19     Ø21         Ø6               no response,
15:19     Ø21         Ø1               facility,
15:19     Ø21         Ø5               no response
```

```
selection-change NC options

accessing tape -- WAIT Ø
         Current NC Port Options

NC address: 7

     Port         Status     Speed    PL/DDD
Local Terminal  On-Line    12ØØ bps    -
Remote Terminal On-Line    12ØØ bps    DDD
Telco           On-Line     3ØØ bps    DDD
Network         On-Line    12ØØ bps    DDD
printer         On-Line     3ØØ bps    -    selectable

choose (r) Change Remote Terminal Port Options
       (t) Change Telco Port Options
       (n) Change Network Port Options
       (p) Change Printer Port Options
       (x) exit

enter choice: p

         Change Printer Port Options

     Port
choose (1)       Status    Speed    PL/DDD
       (2)       Off-Line
       (3)       On-Line   3ØØbps    -
       (c)       continuous
       (s)       selectable
       (x)       exit
enter choice: 1
```

Fig. 23—NC Operation Example - 8

should be in the poll list. After this command has been selected at the NC, it will display ***enter selection:*** which indicates that the NC has completed this command.

4.40 To skip network addresses in the poll list of any data set, the operator must select ***s***. When this is done, the NC will respond with a request for the addresses to be skipped. When an address is skipped, the data set will not poll this address. It will, however, continue to hold the address in its poll list and will display it when requested by an NC user. Since the data set does not poll skipped addresses, fault indications will ***not*** be obtained from this data set. This then is a way for an NC user to temporarily clear faults on the NC screen originating from this data set and any other data sets downstream from it. The same thing could be accomplished by deleting the

```
TIME_____LOCAL_PORT_NET1_NET2_NET3_____FAULT_TYPE_____TOTAL_SYSTEM_FAULTS:1Ø
15:22     Ø31   1                      no response,
15:2Ø     Ø31   2                      no response,
15:19     Ø21         Ø6               no response,
15:19     Ø21         Ø1               facility,
15:19     Ø21         Ø5               no response
```

```
selection-change NC options

          Current NC Port Options

NC address: 7

     Port          Status      Speed    PL/DDD
Local Terminal   On-Line     12ØØ bps    –
Remote Terminal  On-Line     12ØØ bps    DDD
Telco            On-Line      3ØØ bps    DDD
Network          On-Line     12ØØ bps    DDD
printer          Off-Line

choose (r) Change Remote Terminal Port Options
       (t) Change Telco Port Options
       (n) Change Network Port Options
       (p) Change Printer Port Options
       (x) exit

enter choice:x

enter selection:
```

Fig. 24—NC Operation Example - 9

network address from a data set poll list, but this address will not be seen again and might be forgotten.

4.41 When the commands to add, delete, or to skip poll list addresses are used, the new poll list is displayed as soon as the NEW LINE key is depressed. To transmit the displayed poll list to the data set, the NC user must choose the transmit (*t*) command. This command is similar to the data set command ***CHPL.***

4.42 All control data sets have a poll list of tributary data set addresses. Certain tributary data sets will also have a poll list. These are tributary data sets which are assigned category G options. For example, a DS 2096A backbone tributary is given a category G option. Also, DS 2024A and 2048A tributaries which have a concentrator or multiplexer connected to their customer interface will be given a category G option. These tributary data sets will have the addresses of the control data set connected to their ports or connected to the concentrator/multiplexer in their poll list.

4.43 ***Circuit Loss—Inbound (cli):*** An illustration of the basic prompt and response sequence required to execute ***cli*** is shown in Fig. 42. The short form of this procedure may be used.

4.44 ***Circuit Loss—Outbound (clo):*** An illustration of the basic prompt and response sequence required to execute ***clo*** is shown in Fig. 43. The short form of this procedure may be used.

4.45 ***Disable/Enable (dsab):*** An illustration of the basic prompt and response sequence re-

quired to execute ***dsab*** is shown in Fig. 44. The short form of this procedure may be used.

4.46 ***Digital Test (dt):*** An illustration of the basic prompt and response sequence required to execute ***dt*** is shown in Fig. 45. The short form of this procedure may be used.

4.47 ***End-to-End Block Error Test (ee):*** An illustration of the basic prompt and response sequence required to execute ***ee*** is shown in Fig. 46. The short form of this procedure may be used.

4.48 ***Loopback (lpbk):*** An illustration of the basic prompt and response sequence required to execute ***lpbk*** is shown in Fig. 47. The short form of this procedure may be used.

4.49 ***Modem Test (mt):*** An illustration of the basic prompt and response sequence required to execute ***mt*** is shown in Fig. 48. The short form of this procedure may be used.

4.50 ***Standby Facility (sf):*** An illustration of the basic prompt and response sequence required to execute ***sf*** is shown in Fig. 49. The short form of this procedure may be used.

4.51 ***Send Tone (st):*** An illustration of the basic prompt and response sequence required to execute ***st*** is shown in Fig. 50. The short form of this procedure may be used.

NETWORK CONTROLLER COMMANDS OPERATION

A. Nondisruptive Network Controller Commands

4.52 ***Display Fault Log (dsfl):*** An illustration of the basic prompt and response sequence required to execute ***dsfl*** is shown in Fig. 51. The short form of this procedure may be used.

4.53 ***Display Modem Profile (dsmp):*** An illustration of the basic prompt and response sequence required to execute ***dsmp*** is shown in Fig. 52. The short form of this procedure may be used.

4.54 ***Display NC Options (dsncop):*** An illustration of the basic prompt and response sequence required to execute ***dsncop*** is shown in Fig. 53. The short form of this procedure may be used.

4.55 ***Display NC Poll List (dsncpl):*** An illustration of the completed command ***dsncpl*** is shown in Fig. 54.

4.56 ***Display Network Faults (dsnf):*** An illustration of the completed command ***dsnf*** is shown in Fig. 55.

4.57 ***Display Network Status (dsns):*** An illustration of the completed command ***dsns*** is shown in Fig. 56.

4.58 ***Display Queue (dsq):*** An illustration of the completed command ***dsq*** is shown in Fig. 57.

4.59 ***NC Remote DCD Commands (ncrc):*** An illustration of the basic prompt and response sequence required to execute ***ncrc*** is shown in Fig. 58. The short form of this procedure may be used.

B. Disruptive Network Controller Commands

4.60 ***Auto Trouble Report Control (atr):*** An illustration of the basic prompt and response sequence required to execute ***atr*** is shown in Fig. 59. The short form of this procedure may be used. An illustration of the ATR printout is shown in Fig. 60.

4.61 ***Auto Trouble Report File (atrf):*** An illustration of the basic prompt and response sequence required to execute ***atrf*** is shown in Fig. 7. The short form of this procedure may be used.

4.62 ***Change Date and Time (chdt):*** An illustration of the basic prompt and response sequence required to execute ***chdt*** is shown in Fig. 61. The short form of this procedure may be used.

4.63 ***Change Modem Profile (chmp):*** An illustration of the basic prompt and response sequence required to execute ***chmp*** is shown in Fig. 62. The short form of this procedure may be used.

4.64 ***Change NC Identity (chncid):*** An illustration of the basic prompt and response sequence required to execute ***chncid*** is shown in Fig. 63. The short form of this procedure may be used.

4.65 ***Change NC Options (chncop):*** Illustrations of the prompt and responses used to execute ***chncop*** are shown in the examples in the beginning of Part 4, Operation. Refer to Fig. 16 through 24.

4.66 ***Change NC Poll List Command (chncpl):*** An illustration of the basic prompt and re-

sponse sequence required to execute ***chncpl*** is shown in Fig. 64. The short form of this procedure may be used.

4.67 ***Clear Network Faults (clnf):*** To execute clear network faults, type in ***clnf*** followed by depressing NEW LINE. When the command is complete, the indication to the operator is the clearing of the (up to) five network faults and the TOTAL SYSTEM FAULTS indication being set to zero (Fig. 65).

4.68 ***NC Operating Mode (ncom):*** An illustration of the basic prompt and response sequence required to execute ***ncom*** is shown in Fig. 9. The short form of this procedure may be used.

4.69 ***Fault Reporting/Filtering (fr):*** Refer to Fig. 8 for a completed example of the ***fr*** command. The short form of this procedure may be used.

4.70 ***Password Commands (pw):*** An illustration of the prompt and response sequence required to change the NC password is shown in Fig. 66. To change the password (code) requires that the old password be given. Here the new password must be given twice to prevent errors. The password is not stored in the NC tape memory. Thus, when the NC is rebooted, the customer chosen password is lost. However, the tape memory will always have the telco supplied password (***plato***). Security is lost because of this operating procedure. One can gain access to disruptive tests and commands without knowing the password by rebooting the NC and then later using the telco supplied password. The password itself does not display for security reasons.

DIAGNOSTIC AND MAINTENANCE ROUTINES OPERATION

4.71 ***Change List (chl):*** Examples are shown for chl subcommands ***append list*** (Fig. 67), ***change list*** (Fig. 68), ***delete list*** (Fig. 69), and ***new list*** (Fig. 70 and 71).

4.72. During any ***chl*** operation where a list is being entered, the user is asked to supply two addresses. The second address is used for certain tests which require inter-data set communications. (Examples are end-to-end and digital test.) The second address may be omitted by depressing NEW LINE at the keyboard. If an attempt is made to execute a 2-address test when only one address has been listed, the display will show ***bad command qualifier.***

4.73 ***Create Routine (cr):*** The procedure for creating a routine is shown in Fig. 72. When creating a routine the NC will not request addressing information from the operator. All such information is requested at the time of execution of the routine.

4.74 Each routine is limited to 80 keystrokes. Since address information and delaying information is not needed, the greatest number of keystrokes required for each test or command will be about nine. Some will need only two. Thus, ten tests and commands should easily be accommodated in a routine. As with other commands and tests the short form of creating a routine may be used (Fig. 73).

4.75 ***Delete Delayed Routines (dldr):*** The procedure for completing this command is similar to that for ***delete routine*** illustrated in Fig. 74.

4.76 ***Delete Routine (dlr):*** A completed ***dlr*** command is shown in Fig. 74. The NC will confirm the deletion by returning ***enter selection:.***

4.77 ***Display List (dsl):*** A completed ***dsl*** command is shown in Fig. 75.

4.78 ***Display List Directory (dsld):*** A completed ***dsld*** command is shown in Fig. 76.

4.79 ***Display Routine (dsr):*** A completed ***dsr*** command is shown in Fig. 77.

4.80 ***Display Directory of Routines (dsdr):*** A completed ***dsdr*** command is shown in Fig. 78.

4.81 ***Execute Routine (er):*** An illustration of the basic prompt and response sequence required to execute ***er*** is shown in Fig. 79. The short form of this procedure may be used.

5. REFERENCES

5.01 Additional information concerning DATAPHONE II service diagnostic control devices and data sets is contained in the following Bell System Practices:

SECTION	TITLE
592-040-120	Private Line Data Sets 2024, 2048, and 2096—Description and Operation—Stand Alone-Multiple DATAPHONE® II Service
592-040-220	Private Line Data Sets 2024, 2048, and 2096—Installation and

SECTION	TITLE
	Connections—Stand Alone-Multiple DATAPHONE® II Service
592-040-520	Private Line Data Sets 2024, 2048, and 2096—Test Procedures—Stand Alone-Multiple—DATAPHONE® II Service
592-101-100	2100A Data Control Unit (Diagnostic Console)—Description and Operation DATAPHONE® II Service
592-101-200	2100A Data Control Unit (Diagnostic Console)—Installation and Connections—DATAPHONE® II Service
592-101-500	2100A Data Control Unit (Diagnostic Console)—Test Procedures— DATAPHONE® II Service
592-102-201	2200A-L1A Data Control Unit (Network Controller)—Installation and Connections—DATAPHONE® II Service
592-102-501	2200A-L1A Data Control Unit (Network Controller)—Test Procedures— DATAPHONE® II Service

```
TIME_____LOCAL_PORT_NET1_NET2_NET3_____FAULT_TYPE_____TOTAL_SYSTEM_FAULTS:1Ø
15:22     Ø31   1                      no response,
15:2Ø     Ø31   2                      no response,
15:19     Ø21         Ø6               no response,
15:19     Ø21         Ø1               facility,
15:19     Ø21         Ø5               no response
```

```
enter selection: chncop;p;1

          Current NC Port Options

NC address: 7

     Port         Status      Speed    PL/DDD
Local Terminal  On-Line     12ØØ bps    -
Remote Terminal On-Line     12ØØ bps    DDD
Telco           On-Line      3ØØ bps    DDD
Network         On-Line     12ØØ bps    DDD
printer         Off-Line

choose (r) Change Remote Terminal Port Options
       (t) Change Telco Port Options
       (n) Change Network Port Options
       (p) Change Printer Port Options
       (x) exit

enter choice:x

enter selection:
```

Fig. 25—NC Command Operation Example—Short Form

```
TIME_____LOCAL_PORT_NET1_NET2_NET3_____FAULT_TYPE_________TOTAL_SYSTEM_FAULTS:Ø2
1Ø:41      Ø11         Ø1                 modem,
1Ø:41      Ø11                            facility,


enter selection: cli;011;1;01
```

CIRCUIT LOSS-INBOUND SELECTION

CONTROL DS ADDRESS

CHOICE 1 (1ØØ4 HZ)

TRIBUTARY DS ADDRESS

SPACES ARE LEFT FOR PURPOSES OF ILLUSTRATION ONLY

```
enter selection:
RESULTS****** completion time: 1Ø:52
selection-circuit loss - inbound 1ØØ4 Hz

control address: Ø11
tributary address: Ø11//Ø1


loss: -24db
*************

enter selection:
```

Fig. 26—NC Test Operation Example—Short Form

```
TIME_____LOCAL_PORT_NET1_NET2_NET3_____FAULT_TYPE_____TOTAL_SYSTEM_FAULTS:Ø2
17:59     Ø13                          no response,
17:59     Ø11        Ø1                modem,
```

```
enter selection: dsms
selection-display modem status

stored address: 021/02
enter address
(local/port/net1/net2/net3): 015//80/65

enter selection:

RESULTS****** completion time: 10:10
selection-display modem status

address: 015//80/65

accessing tape - WAIT 0

LOCAL/PORT/NET1/NET2/NET3        MODE          FAULT
 015       80   65        test                modem
 015       80   65   01   test                none
 015       80   65   03   normal              facility,stream
 015       80   65   17   disabled            none
 015       80   65   21   test,maint          none
 015       80   65   25   disabled,make busy  modem, facility, stream
*************
```

Fig. 27—NC Display of Display Modem Status Command

```
TIME_____LOCAL_PORT_NET1_NET2_NET3_____FAULT_TYPE_________TOTAL_SYSTEM_FAULTS:04
10:11      021         01                 facility,
10:11      021                            facility,
10:11      011         01                 facility,
10:11      011                            facility,
```

```
enter selecton: dsop
selection-display options

enter address
(local/port/net1/net2/net3): 011

enter selection:
RESULTS****** completion time: 10:14
selection-change options

address: 011



accessing tape -- WAIT 0

  current options

A _ _ 3 _
B 1 _ _
C 1       _ _
D 1 2   _ _ _ 7 _
E   2 _ _ _ _ _ _
F
G _ _ _ _ _ _
H
I
J _
K

*************
enter selection:
```

Fig. 28—NC Display of Display Options Command

```
TIME_____LOCAL_PORT_NET1_NET2_NET3_____FAULT_TYPE_________TOTAL_SYSTEM_FAULTS:Ø4
1Ø:16      Ø11       Ø1                 facility,
1Ø:16      Ø11                          facility,
1Ø:15      Ø21       Ø1                 facility,
1Ø:15      Ø21                          facility,
```

```
enter selection: dspl
selection-display poll list

enter address
(local/port/net1/net2/net3): Ø11

enter selection:
RESULTS******  completion time: 1Ø:19
selection-display poll list

address: Ø11

accessing tape -- WAIT Ø
Active:
Ø1,Ø3
Skipped
Ø2,
*************

enter selection:
```

Fig. 29—NC Display Poll List Command

```
TIME_____LOCAL_PORT_NET1_NET2_NET3_____FAULT_TYPE_____TOTAL_SYSTEM_FAULTS:Ø2
17:59     Ø13                          no response,
17:59     Ø11        Ø1                modem,
```

```
enter selection: eia
selection-EIA status

enter address
(local/port/net1/net2/net3): Ø11//Ø1

enter selection:
RESULTS****** completion time: ØØ:Ø3
selection-EIA status

address: Ø11//Ø1


modem type: 2Ø24A
SD  RD  DM  RS  CS  RR TM  SB
**  **  on  **  **  on off off
*************

enter selection:
```

Fig. 30—NC Display of EIA Status Command

```
TIME_____LOCAL_PORT_NET1_NET2_NET3_____FAULT_TYPE_____TOTAL_SYSTEM_FAULTS:Ø2
17:59     Ø13                          no response,
17:59     Ø11        Ø1                modem,
```

```
enter selection: id
selection-identity

enter address
(local/port/net1/net2/net3): Ø11//Ø1

enter selection:
RESULTS****** completion time: ØØ:Ø4
selection-identity

address: Ø11//Ø1


modem type: 2Ø24A
version number: 1.2
*************

enter selection:
```

Fig. 31—NC Display of Identity Command

```
TIME_____LOCAL_PORT_NET1_NET2_NET3_____FAULT_TYPE_____TOTAL_SYSTEM_FAULTS:Ø4
14:55     Ø11        Ø1                 modem,
14:54     Ø13                           no response,
14:54     Ø11        Ø2                 no response,
14:53     Ø11                           facility,
```

```
enter selection: rsl
selection-receive signal level

enter address
(local/port/net1/net2/net3): Ø11

enter selection:
RESULTS******  completion time: 15:17
selection-receive signal level

address: Ø11


level: - 4dbm
**************

enter selection:
```

Fig. 32—NC Display of Receive Signal Level Command

```
TIME_____LOCAL_PORT_NET1_NET2_NET3_____FAULT_TYPE_____TOTAL_SYSTEM_FAULTS:Ø4
14:55     Ø11        Ø1                 modem,
14:54     Ø13                           no response,
14:54     Ø11        Ø2                 no response,
14:53     Ø11                           facility,
```

```
enter selection: rsq
selection-receive signal quality

enter address
(local/port/net1/net2/net3): Ø11//Ø1

enter selection:
RESULTS****** completion time: 15:2Ø
selection-receive signal quality

address: Ø11//Ø1


value:  3
**********

enter selection:
```

Fig. 33—NC Display of Receive Signal Quality Command

```
TIME_____LOCAL_PORT_NET1_NET2_NET3_____FAULT_TYPE_________TOTAL_SYSTEM_FAULTS:Ø4
14:55     Ø11        Ø1                 modem,
14:54     Ø13                           no response,
14:54     Ø11        Ø2                 no response,
14:53     Ø11                           facility,
```

```
enter selection: rtp
selection-report terminal power

enter address
(local/port/net1/net2/net3): Ø11//Ø1

enter selection:
RESULTS****** completion time: 15:2Ø
selection-report terminal power

address: Ø11//Ø1


terminal power on
**********

enter selection:
```

Fig. 34—NC Display of Report Terminal Power Command

```
TIME_____LOCAL_PORT_NET1_NET2_NET3_____FAULT_TYPE_____TOTAL_SYSTEM_FAULTS:ØØ
```

```
enter selection: sp
selection-signal profile

enter address
(local/port/net1/net2/net3): Ø21

enter selection:
RESULTS****** completion time: 14:Ø3
selection-signal profile

address: Ø21


         receive level: 13
receive signal quality:  9
       frequency shift:  Ø
          phase jitter:  Ø
      background noise:  5
*************

enter selection:
```

Fig. 35—NC Display of Signal Profile Command

```
TIME_____LOCAL_PORT_NET1_NET2_NET3_____FAULT_TYPE_____TOTAL_SYSTEM_FAULTS:1Ø
15:22     Ø31   1                    no response,
15:2Ø     Ø31   2                    no response,
15:19     Ø21         Ø6             no response,
15:19     Ø21         Ø1             facility,
15:19     Ø21         Ø5             no response,
```

```
enter selection: abt
selection-abort test

stored address: Ø21

enter address

(local/port/net1/net2/net3): [carriage return]

accessing tape -- WAIT Ø

enter selection:
```

Fig. 36—NC Display of Abort Test Command

```
TIME_____LOCAL_PORT_NET1_NET2_NET3_____FAULT_TYPE_________TOTAL_SYSTEM_FAULTS:Ø4
14:55     Ø11        Ø1                 modem,
14:54     Ø13                           no response,
14:54     Ø11        Ø2                 no response,
14:53     Ø11                           facility,
```

```
enter selection: auto
selection-automatic network test

enter control address
(local/port/net1/net2/net3): Ø11

enter selection:
RESULTS******  completion time: 15:22
selection-automatic network test

control address: Ø11


FAIL  number of modem failures: 1

addresses of modem failures: Ø2,
*************
enter selection:
```

Fig. 37—NC Display of Automatic Network Test

```
TIME_____LOCAL_PORT_NET1_NET2_NET3_____FAULT_TYPE_________TOTAL_SYSTEM_FAULTS:1Ø
15:22     Ø31   1                      no response,
15:2Ø     Ø31   2                      no response,
15:19     Ø21         Ø6               no response,
15:19     Ø21         Ø1               facility,
15:19     Ø21         Ø5               no response,
```

```
enter selection: chmx
selection-2Ø96 change mux

enter address
(local/port/net1/net2/net3): Ø31

           PORT 1  PORT 2  PORT 3  PORT 4
choose (1)  96ØØ
       (2)  72ØØ
       (3)  48ØØ
       (4)  72ØØ    24ØØ
       (5)  48ØØ    48ØØ
       (6)  24ØØ    24ØØ
       (7)  48ØØ    24ØØ    24ØØ
       (8)  24ØØ    24ØØ    24ØØ    24ØØ
enter choice: 4

enter selection:
```

Fig. 38—NC Display of 2096 Change Mux Command

```
TIME_____LOCAL_PORT_NET1_NET2_NET3_____FAULT_TYPE_________TOTAL_SYSTEM_FAULTS:04
10:15      021         01               facility,
10:15      021                          facility,
10:11      011         01               facility,
10:11      011                          facility,
```

```
enter selection: chop
selection-change options

enter address
(local/port/net1/net2/net3): 011

enter selection:
RESULTS******
selection-change options

address: 011                                        completion time: 10:16

                                                         entry time: 10:16
                                                                tag: 01
accessing tape -- WAIT 0

  current options

A _ _ 3 _
B 1 _ _
C 1       _ _
D 1 2   _ _ _ 7 _
E   2 _ _ _ _ _ _
F
G _ _ _ _ _ _
H
I
J _
K

choose (a) add
       (d) delete
       (s) stored
       (t) transmit
       (x) exit
enter choice: a,g2
```

Fig. 39—NC Display of Change Options Command - 1

```
TIME_____LOCAL_PORT_NET1_NET2_NET3_____FAULT_TYPE_____TOTAL_SYSTEM_FAULTS:04
10:15      021         01                facility,
10:15      021                           facility,
10:11      011         01                facility,
10:11      011                           facility,
```

```
selection-change options

enter address
(local/port/net1/net2/net3): 011

enter selection:
RESULTS****** completion time: 10:16
selection-change options

address: 011



accessing tape -- WAIT 0

  new options

A _ _ 3 _
B 1 _ _
C 1       _ _
D 1 2   _ _ _ 7 _
E   2 _ _ _ _ _ _
F
G _ 2_ _ _ _ _ _
H
I
J _
K

choose (a) add
       (d) delete
       (s) stored
       (t) transmit
       (x) exit
enter choice:t
```

Fig. 40—NC Display of Change Options Command - 2

```
TIME_____LOCAL_PORT_NET1_NET2_NET3_____FAULT_TYPE_________TOTAL_SYSTEM_FAULTS:Ø4
1Ø:16     Ø11        Ø1               facility,
1Ø:16     Ø11                         facility,
1Ø:15     Ø21        Ø1               facility,
1Ø:15     Ø21                         facility,
```

```
enter selection: chpl
selection-change poll list

enter address
(local/port/net1/net2/net3): Ø11

enter selection:
RESULTS****** completion time: 1Ø:19
selection-change poll list

address: Ø11


accessing tape -- WAIT Ø
Active:
Ø1,Ø2,
Skipped:
Ø3,

choose (aq) acquire
       (a)  add
       (d)  delete
       (s)  skip
       (t)  transmit
       (x)  exit
enter choice:
```

Fig. 41—NC Display of Change Poll List Command

```
TIME_____LOCAL_PORT_NET1_NET2_NET3_____FAULT_TYPE_________TOTAL_SYSTEM_FAULTS:Ø4
1Ø:41     Ø11        Ø1                 modem,
1Ø:41     Ø11                           facility,
```

```
enter selection: cli
selection-circuit loss - inbound

enter control address
(local/port/net1/net2/net3): Ø11

choose (1) 1ØØ4 Hz
       (2) 18Ø4 Hz
       (3) 28Ø4 Hz
enter choice: 1

enter tributary address
(local/port/net1/net2/net3): Ø11//Ø1

enter selection:
RESULTS******  completion time: 1Ø:52
selection-circuit loss - inbound - 1ØØ4 Hz
         Control        Tributary
address: Ø11            Ø11//Ø1

loss: -3ØdB
*************

enter selection:
```

Fig. 42—NC Display of Circuit Loss - Inbound Test

```
TIME_____LOCAL_PORT_NET1_NET2_NET3_____FAULT_TYPE_________TOTAL_SYSTEM_FAULTS:Ø2
1Ø:41     Ø11        Ø1                 modem,
1Ø:41     Ø11                           facility,
```

```
enter selection: clo
selection-circuit loss - outbound

enter control address
(local/port/net1/net2/net3): Ø11

choose (1) 1ØØ4 Hz
       (2) 18Ø4 Hz
       (3) 28Ø4 Hz
enter choice: 2

enter tributary address
(local/port/net1/net2/net3): Ø11//Ø1

enter selection:
RESULTS******  completion time: 1Ø:53
selection-circuit loss - inbound - 18Ø4 Hz
        Control        Tributary
address: Ø91           Ø91//Ø2

loss: -3ØdB
*************

enter selection:
```

Fig. 43—NC Display of Circuit Loss - Outbound Test

```
TIME_____LOCAL_PORT_NET1_NET2_NET3_____FAULT_TYPE_________TOTAL_SYSTEM_FAULTS:Ø4
10:34     Ø21        Ø1               facility,
10:34     Ø21                         facility,
10:16     Ø11        Ø1               facility,
10:16     Ø11                         facility,
```

```
enter selection: dsab
selection-disable/enable

enter address
(local/port/net1/net2/net3): Ø11

choose (d) disable
       (e) enable
enter choice: d

enter selection:
RESULTS****** completion time: 11:13
selection-disable/enable - disable

address: Ø11


command completed
*************

enter selection:
```

Fig. 44—NC Display of Disable/Enable Command

```
TIME_____LOCAL_PORT_NET1_NET2_NET3_____FAULT_TYPE_____TOTAL_SYSTEM_FAULTS:Ø4
14:55     Ø11        Ø1               modem,
14:54     Ø13                         no response,
14:54     Ø11        Ø2               no response,
14:53     Ø11                         facility,
```

```
enter selection: dt
selection-digital test

enter control address
(local/port/net1/net2/net3): Ø11

enter number of 1ØØK units (1 to 32ØØØ)
(data set standard = 1): 1Ø

enter tributary address
(local/port/net1/net2/net3): Ø11//Ø1

enter selection:
RESULTS******  completion time: 15:37
selection-digital test
        Control        Tributary
address: Ø11           Ø11//Ø1

number of units of 1ØØK transmitted: 4
           number of bits in error: Ø
*************
enter selection:
```

Fig. 45—NC Display of Digital Test

```
TIME_____LOCAL_PORT_NET1_NET2_NET3_____FAULT_TYPE_________TOTAL_SYSTEM_FAULTS:Ø4
1Ø:34     Ø21        Ø1               facility,
1Ø:34     Ø21                         facility,
1Ø:16     Ø11        Ø1               facility,
1Ø:16     Ø11                         facility,
```

```
enter selection: ee
selection-end to end block error test

enter control address
(local/port/net1/net2/net3): Ø11

enter number of blocks (1 to 32ØØØ)
(data set standard = 1ØØ): 2Ø

enter tributary address
(local/port/net1/net2/net3): Ø11//Ø1

enter selection:
RESULTS******  completion time: 11:11
selection-end to end block error test
        Control        Tributary
address: Ø11           011//01

number of blocks transmitted: 2Ø
   number of outbound errors: Ø
    number of inbound errors: Ø
*************
enter selection:
```

Fig. 46—NC Display of End-to-End Block Error Test

```
TIME_____LOCAL_PORT_NET1_NET2_NET3_____FAULT_TYPE_________TOTAL_SYSTEM_FAULTS:Ø4
14:55     Ø11        Ø1                 modem,
14:54     Ø13                           no response,
14:54     Ø11        Ø2                 no response,
14:54     Ø11                           facility,
```

```
enter selection: lpbk
selection-loopback

enter address
(local/port/net1/net2/net3): Ø11//Ø1

Choose (a) analog
       (d) digital
       (r) release
enter choice: a

enter selection:
RESULTS****** completion time: 15:44
selection-loopback-analog

address: Ø11/Ø1

command completed
*************
enter selection:
```

Fig. 47—NC Display of Loopback Test

```
TIME_____LOCAL_PORT_NET1_NET2_NET3_____FAULT_TYPE_____TOTAL_SYSTEM_FAULTS:Ø4
14:55     Ø11        Ø1                 modem,
14:54     Ø13                           no response,
14:54     Ø11        Ø2                 no response,
14:53     Ø11                           facility,
```

```
enter selection: mt
selection-modem test

enter address
(local/port/net1/net2/net3): Ø11//Ø1

choose (c) continuous
       (s) single
enter choice: s

enter selection:
RESULTS****** completion time: 15:48
selection-modem test - single

address: Ø11//Ø1


PASS
************
enter selection:
```

Fig. 48—NC Display of Modem Test

```
TIME_____LOCAL_PORT_NET1_NET2_NET3_____FAULT_TYPE_____TOTAL_SYSTEM_FAULTS:Ø2
17:59     Ø13                          no response,
17:59     Ø11        Ø1                modem,
```

```
enter selection: sf
selection-standby facility

enter address
(local/port/net1/net2/net3): Ø11 delay

time now is: ØØ:21
enter desired time(hours:minutes): ØØ:22

choose (c) connect
       (r) release
enter choice: r

enter selection:
RESULTS******  completion time: ØØ:22
selection-standby facility - release

address: Ø11


command completed
*************
enter selection:
```

Fig. 49—NC Display of Standby Facility Command

```
TIME_____LOCAL_PORT_NET1_NET2_NET3_____FAULT_TYPE_________TOTAL_SYSTEM_FAULTS:Ø2
ØØ:Ø1     Ø13                          no response,
ØØ:Ø1     Ø11        Ø1                modem,
```

```
enter selection: st
selection-send tone

enter address
(local/port/net1/net2/net3): Ø11

choose (1) 1ØØ4 Hz
       (2) 18Ø4 Hz
       (3) 28Ø4 Hz
       (r) release
enter choice: 3

enter selection:
RESULTS****** completion time: 1Ø:30
selection-send tone - 28Ø4 Hz

address: Ø11


command completed
**************
enter selection:
```

Fig. 50—NC Display of Send Tone Command

```
TIME_____LOCAL_PORT_NET1_NET2_NET3_____FAULT_TYPE_________TOTAL_SYSTEM_FAULTS:Ø2
1Ø:5Ø     Ø11                          no response,
1Ø:44     Ø52                          no response,
```

```
enter selection: dsfl
selection-display fault log

DATA      TIME     LOCAL/PORT/NET1/NET2/NET3     FAULT_TYPE
Ø2/2Ø/8Ø  15:23      Ø91        Ø2              modem,facility,
Ø2/2Ø/8Ø  15:21      Ø91        Ø2              facility,
Ø2/2Ø/8Ø  15:21      Ø91        Ø1              facility,
Ø2/2Ø/8Ø  14:46      Ø91                        modem,
Ø2/2Ø/8Ø  14:46      Ø91                        modem,
Ø1/Ø1/8Ø  ØØ:37      Ø91        Ø1              no response,
Ø1/Ø1/8Ø  ØØ:Ø2      Ø91        Ø1              facility,
Ø1/Ø1/8Ø  ØØ:Ø1      Ø91        Ø2              facility,
Ø1/Ø1/8Ø  ØØ:ØØ      Ø91        Ø2              facility,
Ø1/Ø1/8Ø  ØØ:ØØ      Ø91        Ø1              facility,
enter selection:
```

Fig. 51—NC Display of Display Fault Log Command

```
ØTIME_____LOCAL_PORT_NET1_NET2_NET3_____FAULT_TYPE_________TOTAL_SYSTEM_FAULTS:Ø2
11:27     Ø11        65C  Ø2           facility,
11:27     Ø11        65C               facility,
```

```
enter selection: dsmp
selection-display modem profile


(local/port/net1/net2/net3): Ø11

accessing tape -- WAIT Ø

accessing tape -- WAIT Ø

Modem Type: 2Ø24a
Circuit Number: 24LA
Modem Location: 47 Church Street, NYC
Site Contact Person: J. H. Watson
Phone: 555-6743
Remarks: Don't call after 1:ØØ AM
ATR: yes

(n) next address
(x) exit
```

Fig. 52—NC Display of Display Modem Profile Command

```
TIME_____LOCAL_PORT_NET1_NET2_NET3_____FAULT_TYPE_________TOTAL_SYSTEM_FAULTS:10
15:22      031   1                      no response,
15:20      031   2                      no response,
15:19      021         06               no response,
15:19      021         01               facility,
15:19      021         05               no response,
```

```
enter selection: dsncop
selection-display NC options


accessing tape -- WAIT 0
          Current NC Port Options

NC address: 7

     Port          Status     Speed   PL/DDD
Local Terminal   On-Line    1200 bps   -
Remote Terminal  On-Line    1200 bps   DDD
Telco            On-Line     300 bps   DDD
Network          On-Line    1200 bps   DDD
printer          On-Line     300 bps   -      selectable

enter selection:
```

Fig. 53—NC Display of Display NC Options Command

```
TIME_____LOCAL_PORT_NET1_NET2_NET3_____FAULT_TYPE_________TOTAL_SYSTEM_FAULTS:1Ø
15:22      Ø31   1                      no response,
15:2Ø      Ø31   2                      no response,
15:19      Ø21         Ø6               no response,
15:19      Ø21         Ø1               facility,
15:19      Ø21         Ø5               no response,
```

```
enter selection: dsncpl
selection-display NC poll list


accessing tape -- WAIT Ø
LOCAL   STATUS     LOCAL   STATUS     LOCAL   STATUS     LOCAL    STATUS
Ø11       skip     Ø21     active     Ø31 2   active     Ø66      active

enter selection:
```

Fig. 54—NC Display of Display NC Poll List Command

```
TIME_____LOCAL_PORT_NET1_NET2_NET3_____FAULT_TYPE_________TOTAL_SYSTEM_FAULTS:Ø8
14:34      123   4    57C  15C  Ø4      modem,facility,stream,
13:42      Ø34   1    44                modem,
11:23      Ø11   2    45C  57           modem,
11:56      214   1    24C  Ø3           modem,stream,
1Ø:Ø4      Ø31   2    37                stream,
-------------------------------------------------------------------------------
Ø9:23      Ø12   1    13                facility,
Ø9:Ø8      3Ø2   4    Ø2                modem,facility,
Ø7:41      221   1    38                modem,
enter selection:
```

Fig. 55—NC Display of Display Network Faults Command

```
TIME_____LOCAL_PORT_NET1_NET2_NET3_____FAULT_TYPE_________TOTAL_SYSTEM_FAULTS:Ø4
15:56      Ø13                          no response,
15:56      Ø11        Ø2                no response,
15:56      Ø11        Ø1                modem,
15:56      Ø11                          facility,

-------------------------------------------------------------------------------
enter selection: dsns
selection-display network status

         the current time is 15:43

TIME     LOCAL/PORT/NET1/NET2/NET3     STATUS
15:43      Ø91        Ø1              test,
15:43      Ø91        Ø2              disabled,
network status check is completed

enter selection:
```

Fig. 56—NC Display of Display Network Status Command

```
TIME_____LOCAL_PORT_NET1_NET2_NET3_____FAULT_TYPE_________TOTAL_SYSTEM_FAULTS:Ø4
13:54      Ø11         65C  Ø2          facility,
13:54      Ø11         65C              facility,
13:32      Ø52                          no response,
13:32      Ø12                          no response,

enter selection: dsq
selection-display queue

                    (NOTE: 'D' preceding tag indicates daily execution.
                           'R' following tag indicates remote network destination.)

                        the current time is 15:47

ENTER RUN   STOP  SELECTION/ ----------------ADDRESS----------- STATUS   TEST   TAG
TIME  TIME  TIME    NAME                                                COUNT
15:46             auto       Ø91//Ø1                          executing        DØ1
10:52 14:00 04:00 routine    list 9                           running          D12
15:47             ee         Ø91              Ø91//Ø2         waiting           Ø4

enter selection:
```

Fig. 57—NC Display of Display Queue Command

```
TIME_____LOCAL_PORT_NET1_NET2_NET3_____FAULT_TYPE_________TOTAL_SYSTEM_FAULTS:1Ø
15:22      Ø31   1                     no response,
15:2Ø      Ø31   2                     no response,
15:19      Ø21         Ø6              no response,
15:19      Ø21         Ø1              facility,
15:19      Ø21         Ø5              no response,

remote operations (continued)
selection-NC remote dcd commands


choose (u) unlock remote dcd
       (f) send remote fault list
       (i) send remote identification
enter choice:
```

Fig. 58—NC Display of NC Remote DCD Commands

```
TIME_____LOCAL_PORT_NET1_NET2_NET3_____FAULT_TYPE_________TOTAL_SYSTEM_FAULTS:Ø4
1Ø:Ø2     Ø11                          modem,
1Ø:Ø2     Ø11        65C  Ø2          facility,
1Ø:Ø2     Ø11        65C              facility,
Ø9:38     Ø52                         no response,
```

```
enter selection: atr
selection-auto trouble report control

accessing tape -- WAIT Ø

ATR not active

choose (a)  activate
       (d)  deactivate
enter choice: a

accessing tape -- WAIT Ø

ATR activated

enter selection:
```

Fig. 59—NC Display of Auto Trouble Report Control Command

```
N J BELL
175 Park Ave, Madison, N. J.


SS Trouble Ticket Data

Serial/Tel. #Format: FD224538NJ
Reported By: J. Doe                          Tel. No. : 201-555-4096
Customer: N J Bell
Trouble Reported: no response 011//01/
Received By: AIR                             Received Time: 08/12 00:18

Customer Data

NC Tel. No.: 201-555-1107
NC Password: total
Remarks: None

Modem Data

Modem Type: 2048A
Modem Location: 25 NO MAIN ST CAMDEN
Site Contact: NONE                           Tel. No.: NONE
Remarks: OPTIONS A4 B2 C6 D6 D7 E1 E3
```

Fig. 60—ATR Printout Example

```
TIME_____LOCAL_PORT_NET1_NET2_NET3_____FAULT_TYPE_________TOTAL_SYSTEM_FAULTS:Ø3
1Ø:44     Ø11        65C  Ø2          facility,
1Ø:44     Ø11        65C              facility,
1Ø:44     Ø52                         no response,
```

```
enter selection: chdt
selection-change date and time


date now is: 11/11/79
enter desired date (month/day/year): 11/29/79

time now is 11:3Ø
enter desired time(hours:minutes): 1Ø:46

enter selection:
```

Fig. 61—NC Display of Change Date and Time Command

```
TIME_____LOCAL_PORT_NET1_NET2_NET3_____FAULT TYPE_________TOTAL_SYSTEM_FAULTS:Ø2
ØØ:45     Ø11                         facility
ØØ:Ø4     Ø11        Ø1               facility
```

```
enter selection: chmp
selection-change modem profile

Modem Type: 2Ø48A
Circuit Number: 34LA654
Modem Location: NYC
Site Contact Person: J.B. Howard
Phone: 555-4495
Remarks: Do not call after 2:ØØ AM
ATR: y

choose (c) change
       (d) delete
       (s) save
       (n) next profile
       (x) exit

enter choice:
```

Fig. 62—NC Display of Change Modem Profile Command

```
TIME_____LOCAL_PORT_NET1_NET2_NET3_____FAULT_TYPE_________TOTAL_SYSTEM_FAULTS:1Ø
15:22     Ø31   1                      no response,
15:20     Ø31   2                      no response,
15:19     Ø21         Ø6               no response,
15:19     Ø21         Ø1               facility,
15:19     Ø21         Ø5               no response,
```

```
enter selection: chncid
selection-change NC identity


accessing tape -- WAIT Ø

the NC identification now is: BTL Holmdel, NJ
enter desired identification:
```

Fig. 63—NC Display of Change NC Identity Command

```
TIME_____LOCAL_PORT_NET1_NET2_NET3_____FAULT_TYPE_________TOTAL_SYSTEM_FAULTS:1Ø
15:22     Ø31   1                      no response,
15:2Ø     Ø31   2                      no response,
15:19     Ø21         Ø6               no response,
15:19     Ø21         Ø1               facility,
15:19     Ø21         Ø5               no response,
```

```
enter selection: chncpl
selection-change NC poll list


choose (a)  add
       (aq) acquire
       (d)  delete
       (s)  skip
enter choice: a
                                        (NOTE:for 2Ø96A sets include number
                                         of active ports, e.g., Ø22-4)
enter local address:
```

Fig. 64—NC Display of Change NC Poll List Command

```
TIME_____LOCAL_PORT_NET1_NET2_NET3_____FAULT_TYPE_____TOTAL_SYSTEM_FAULTS:ØØ

enter selection: clnf

enter selection:
```

Fig. 65—NC Display of Clear Network Faults Command

```
TIME_____LOCAL_PORT_NET1_NET2_NET3_____FAULT_TYPE_____TOTAL_SYSTEM_FAULTS:Ø2
15:42     Ø11        Ø1                 facility,
15:41     Ø11                           facility,
```

```
enter selection: pw
selection-password commands


the NC is unlocked

choose (l) lock NC
       (u) unlock NC
       (c) change password
enter choice:c

selection-change password


password:


enter new password:
confirmation:
enter selection:
```

Fig. 66—NC Display of Password Commands

```
TIME_____LOCAL_PORT_NET1_NET2_NET3_____FAULT_TYPE_________TOTAL_SYSTEM_FAULTS:Ø2
17:59     Ø13                          no response
17:59     Ø11        Ø1                modem
```

```
enter selection: chl
selection - change list

choose (a) append list
       (c) change list
       (d) delete list
       (n) new list
       (x) exit

enter choice: a
enter list ID (1 - 10): 10

no list with ID 10
enter list ID (1-10): 9

list ID 9 is currently in use.
To append to this list you must
deactivate all routines using this list
enter list ID (1 - 10): 86

invalid list ID
enter list ID (1 - 10): 8

045 addresses available

enter address or "exit"
(local/port/net1/net2/net3): 011//01

enter secondary address:
(local/port/net1/net2/net3): exit

accessing tape - WAIT Ø

accessing tape - WAIT Ø

enter selection:
```

Fig. 67—NC Display of Change List Command—Append List Subcommand

```
TIME_____LOCAL_PORT_NET1_NET2_NET3_____FAULT_TYPE_________TOTAL_SYSTEM_FAULTS:Ø2
17:59     Ø13                          no response,
17:59     Ø11        Ø1                modem,
```

```
enter selection: chl
selection - change list

choose (a) append list
       (c) change list
       (d) delete list
       (n) new list
       (x) exit

enter choice: c
enter list ID (1 - 10): 10

no list with ID 10
enter list ID (1-10): 88

invalid list ID
enter list ID (1 - 10): 9

list ID 9 is currently in use.
To change to this list you must
deactivate all routines using this list
enter list ID (1 - 10): 8

entry  1; address - 011//01;  secondary - 011//01/05
choose (c) change
       (d) delete
       (n) no change
       (x) exit

enter choice: c

enter address or "exit"
(local/port/net1/net2/net3): 011//01

enter secondary address
(local/port/net1/net2/net3):011//01/04

entry  2; address - 012//02;  secondary - 012//02/02
choose (c) change
       (d) delete
       (n) no change
       (x) exit

enter choice: x
```

Fig. 68—NC Display of Change List Command—Change List Subcommand

```
TIME_____LOCAL_PORT_NET1_NET2_NET3_____FAULT_TYPE_____TOTAL_SYSTEM_FAULTS:Ø2
17:59     Ø13                          no response,
17:59     Ø11        Ø1                modem,
```

```
enter selection: chl
selection - change list

choose (a) append list
       (c) change list
       (d) delete list
       (n) new list
       (x) exit

enter choice: d

enter list ID (1 - 10): 10

no list with ID 10
enter list ID (1-10): 86

invalid list ID
enter list ID (1 - 10): 9

list ID 9 is currently in use.
To delete to this list you must
deactivate all routines using this list
enter list ID (1 - 10): 8

list ID 8 deleted
```

Fig. 69—NC Display of Change List Command—Delete List Subcommand

```
TIME_____LOCAL_PORT_NET1_NET2_NET3_____FAULT_TYPE_________TOTAL_SYSTEM_FAULTS:Ø2
17:59      Ø13                          no response,
17:59      Ø11          Ø1              modem,
```

```
enter selection: chl
selection - change list

choose (a) append list
       (c) change list
       (d) delete list
       (n) new list
       (x) exit

enter choice: n

 045 addresses available
available list IDs: 3, 5, 8, 9
enter new list ID: 4

invalid list ID

 045 addresses available
available list IDs: 3, 5, 8, 9
enter new list ID: 3

enter address or "exit"
(local/port/net1/net2/net3): 013//01

enter secondary address
(local/port/net1/net2/net3): [carriage return]

secondary address skipped

enter address or "exit"
(local/port/net1/net2/net3): 014//04/01

enter secondary address
(local/port/net1/net2/net3): 014//01/01/01

enter address or "exit"
(local/port/net1/net2/net3): exit
```

Fig. 70—NC Display of of Change List Command—New List Subcommand (Example 1)

```
TIME_____LOCAL_PORT_NET1_NET2_NET3_____FAULT_TYPE_____TOTAL_SYSTEM_FAULTS:Ø2
17:59     Ø13                          no response,
17:59     Ø11        Ø1                modem,
```

```
enter selection: ch1
selection - change list

choose (a) append list
       (c) change list
       (d) delete list
       (n) new list
       (x) exit

enter choice: n

no list ID available
To make a new list you must delete an old list.

enter selection:
```

Fig. 71—NC Display of Change List Command—New List Subcommand (Example 2)

```
TIME_____LOCAL_PORT_NET1_NET2_NET3_____FAULT_TYPE_________TOTAL_SYSTEM_FAULTS:Ø4
1Ø:Ø2     Ø11                          modem,
1Ø:Ø2     Ø11        65C  Ø2           facility,
1Ø:Ø2     Ø11        65C              facility,
Ø9:38     Ø52                         no response,
```

```
enter selection: cr
selection-create routine

                                    (NOTE:Name must be less than 8 characters)
new routine name: tryl

enter routine selection or (qr) quit routine: lpbk

create routine (continued)
selection-loopback


choose (a) analog
       (d) digital
       (r) release
enter choice: a

create routine (continued)
selection-loopback


choose (a) analog
       (d) digital
       (r) release
enter choice: a

enter routine selection or (qr) quit routine: qr

selection-quit routine


accessing tape -- WAIT Ø

accessing tape -- WAIT Ø

enter selection:
```

Fig. 72—NC Display of Create Routine Command

```
TIME_____LOCAL_PORT_NET1_NET2_NET3_____FAULT_TYPE_____TOTAL_SYSTEM_FAULTS:1Ø
15:22     Ø31   1                      no response,
15:2Ø     Ø31   2                      no response,
15:19     Ø21         Ø6               no response,
15:19     Ø21         Ø1               facility,
15:19     Ø21         Ø5               no response,
```

```
enter selection: cr;test;mt;s;ee;534;qr

accessing tape -- WAIT Ø

CREATE ROUTINE COMMAND
ROUTINE NAME
MODEM TEST
MT-SINGLE
END-TO-END BLOCK ERROR TEST
NUMBER OF TEST BLOCKS
QUIT ROUTINE

enter selection:
```

Fig. 73—NC Display of Create Routine Command—Short Form

```
TIME_____LOCAL_PORT_NET1_NET2_NET3_____FAULT_TYPE_____TOTAL_SYSTEM_FAULTS:Ø4
1Ø:Ø2     Ø11                      modem,
1Ø:Ø2     Ø11         65C  Ø2      facility,
1Ø:Ø2     Ø11         65C          facility,
Ø9:38     Ø52                      no response,
```

```
enter selection: dlr
selection-delete routine

enter routine name: try1

accessing tape -- WAIT Ø

accessing tape -- WAIT Ø

enter selection:
```

Fig. 74—NC Display of Delete Routine Command

```
TIME_____LOCAL_PORT_NET1_NET2_NET3_____FAULT_TYPE_________TOTAL_SYSTEM_FAULTS:Ø2
17:59     Ø13                          no response,
17:59     Ø11        Ø1                modem,

enter selection: dsl
selection-display list

enter list ID (1 - 10): 9

LIST 9,     26 ENTRIES,   LIST NOT IN USE.

ENTRY     TEST ADDRESS        SECONDARY ADDRESS

  1       address             address
  2       address             none
  3       address             none
  4       address             address

enter selection:
```

Fig. 75—NC Display of Display List Command

```
TIME_____LOCAL_PORT_NET1_NET2_NET3_____FAULT_TYPE_________TOTAL_SYSTEM_FAULTS:Ø2
17:59     Ø13                          no response,
17:59     Ø11        Ø1                modem,

enter selection: dsld
selection-display list directory

LIST  ADDRESS  ROUTINE
 ID    COUNT    COUNT

  1     18        2
  3     10        1
  4     32        0
  9      5        1

UNUSED ADDRESSES:  63

enter selection:
```

Fig. 76—NC Display of Display List Directory Command

```
TIME_____LOCAL_PORT_NET1_NET2_NET3_____FAULT_TYPE_____TOTAL_SYSTEM_FAULTS:Ø4
1Ø:34     Ø21        Ø1               facility,
1Ø:34     Ø21                         facility,
1Ø:16     Ø11        Ø1               facility,
1Ø:16     Ø11                         facility,
```

```
enter selection: dsr
selection-display routine


enter routine name: test1

accessing tape -- WAIT Ø

enter selection: auto

selection-automatic network test


enter selection: ee

selection-end to end block error test


enter number of blocks (1 to 32ØØØ)
(data set standard = 1ØØ): 1Ø

enter selection: qr

selection-quit routine


enter selection:
```

Fig. 77—NC Display of Display Routine Command

```
TIME_____LOCAL_PORT_NET1_NET2_NET3_____FAULT_TYPE_________TOTAL_SYSTEM_FAULTS:1Ø
15:22     Ø31   1                      no response,
15:2Ø     Ø31   2                      no response,
15:19     Ø21         Ø6               no response,
15:19     Ø21         Ø1               facility,
15:19     Ø21         Ø5               no response,
```

```
enter selection: dsrd
selection-display routine directory

test
test1
test2
test3

enter selection:
```

Fig. 78—NC Display of Display of Display Directory of Routines Command

```
TIME_____LOCAL_PORT_NET1_NET2_NET3_____FAULT_TYPE_________TOTAL_SYSTEM_FAULTS:Ø4
1Ø:34     Ø21        Ø1               facility,
1Ø:34     Ø21                         facility,
1Ø:16     Ø11        Ø1               facility,
1Ø:16     Ø11                         facility,
```

```
enter selection: er
selection-execute routine


enter routine name: routine

choose (d) delay the routine
       (e) execute the routine now
       (r) repeat the routine daily
       (b) both delay the routine and repeat it daily
       (x) exit

enter choice: b

choose: (a) address
        (l) list

enter choice: 1

enter list ID (1 - 10): 9

enter routine stop time
time now is 10:52
enter desired time(hours:minutes); 04:00

enter routine delay time
time now is 10:52
enter desired time(hours:minutes) 14:00

enter selection:
```

Fig. 79—NC Display of Execute Routine Command