ESS SERVICE ORDER PROCEDURES USING THE SERVICE ORDER TELETYPEWRITER NO. 3 ELECTRONIC SWITCHING SYSTEM (GENERIC PROGRAM 3E3)

CONTENTS PAGE

1. GENERAL 3
A. Definitions 3
B. Administrative Procedures for Establishing a Line Class Code (LCC) 4
2. TELETYPEWRITER ARRANGEMENTS . . 4
SERVICE ORDER TTY 4
KEYWORDS IN ESS ORDERS 6
PROCEDURE TO ACTIVATE THE SERVICE ORDER TTY ARRANGED FOR AUTOCONNECT 7
MAKING A PAPER TAPE MANUALLY . 7
TRANSMITTING A TAPE INTO THE ESS . 8
ESS ORDER ACKNOWLEDGMENT . . . 9
3. PROCESSING AN ESS ORDER 10
ASSIGNMENT OF ORDER NUMBER TO AN ESS ORDER 10
TYPING AN ESS ORDER ON-LINE . . 11
TYPING AN ESS ORDER OFF-LINE . . 11
4. FLOWCHARTS 11
A. Option Symbols 11
B. Flowlines 11
C. List of Flowcharts 12

CONTENTS PAGE

5. EXAMPLES OF SINGLE PARTY, 2-PARTY, MULTIPARTY, AND COIN LINE MESSAGES 12
A. New Line Assignments 13
B. Change Line Assignments 18
C. Disconnect Line 29
6. EXAMPLES OF SERIES COMPLETION MESSAGES 29
A. New Installation With Series Completion 30
B. Change Lines in Series Completion Group 31
C. Disconnect Lines From Series Completion Group 33
7. EXAMPLES OF MULTILINE HUNTING GROUP ASSIGNMENT MESSAGES 34
A. New MLHG Group Assignments . 35
B. Change MLHG Group Assignments . 35
C. Disconnect MLHG 39
8. EXAMPLES OF MULTILINE HUNTING GROUP TERMINAL MESSAGES 39
A. New Terminal Assignments to MLHG 40
B. Change MLHG Terminal Assignments 40

NOTICE
Not for use or disclosure outside the
Bell System except under written agreement

CONTENTS PAGE

C. Disconnect MLHG Terminal . . . 43

9. VERIFICATION OF ASSIGNMENTS . . . 44

VERIFICATION OF SINGLE PARTY OR COIN LINE . . . 44

VERIFICATION OF 2-PARTY LINE . . . 44

VERIFICATION OF MULTIPARTY LINE . 44

VERIFICATION OF MULTILINE HUNTING GROUP . . . 44

VERIFICATION OF MULTILINE HUNTING GROUP TERMINAL . . . 45

VERIFICATION OF CALL FORWARDING NUMBER . . . 45

VERIFICATION OF CUSTOMER SPEED CALLING NUMBERS . . . 45

VERIFICATION OF SOFTWARE MESSAGE REGISTER CONTENTS . . . 45

10. TELEPHONE COMPANY CHANGES TO CUSTOMER SPEED CALLING LISTS . . 45

11. TELEPHONE COMPANY CHANGES TO CUSTOMER CALL FORWARDING NUMBERS . . . 46

12. OFFICE RECORDS . . . 46

13. FEATURE GLOSSARY . . . 48

Figures

1. Flowchart for Preparing and Processing ESS Service Order and Tape . . . 49

2. Example of Line Class Code Table— Form ESS 3306-TG3 . . . 50

3. Example of Line Class Code Table— Form ESS 3306-R . . . 51

4. Teletypewriter Arrangements . . . 52

5. Teletypewriter Keyboard . . . 53

CONTENTS PAGE

6. Perforated Tape Used With Service Order Teletypewriter . . . 53

7. ESS Order Log . . . 54

8. Example of Flowchart . . . 55

9. RC:LINE, TYP NEW Message Flowchart . 57

10. RC:LINE, TYP CHG Message Flowchart . 59

11. RC:LINE, TYP OUT Message Flowchart . 61

12. RC:TWOPTY, TYP NEW Message Flowchart . . . 63

13. RC:TWOPTY, TYP CHG Message Flowchart . . . 65

14. RC:TWOPTY, TYP OUT Message Flowchart . . . 67

15. RC:MPTY, TYP NEW Message Flowchart . 69

16. RC:MPTY, TYP CHG Message Flowchart . 71

17. RC:MPTY, TYP OUT Message Flowchart . 73

18. RC:MTL, TYP NEW Message Flowchart . 75

19. RC:MTL, TYP CHG Message Flowchart . 77

20. RC:MTL, TYP OUT Message Flowchart . 79

21. RC:MLHG, TYP NEW Message Flowchart . 81

22. RC:MLHG, TYP CHG Message Flowchart . 83

23. RC:MLHG, TYP OUT Message Flowchart . 85

24. RC:CFN Message Flowchart . . . 87

25. RC:SCN Speed Calling Message Flowchart . . . 89

26. Example of Telephone Number Table—Form ESS 3100-TG3 . . . 91

27. Example of Telephone Number Table—Form ESS 3100-R . . . 92

28. Example of Multiline Hunting Group Table—Form ESS 3105-TG3 . . . 93

CONTENTS PAGE

29. Example of Multiline Hunting Group Table—Form ESS 3105-R 95

30. Example of Supplementary Information Table—Form ESS 3107-1TG3 97

31. Example of Supplementary Information Table—Form ESS 3107-2TG3 98

32. Example of Supplementary Information Table—Form ESS 3107-1R 99

33. Example of Supplementary Information Table—Form ESS 3107-2R 101

34. Example of Office Equipment Number—Form ESS 3171-R 103

Tables

A. RC Message Keywords 105

B. Recent Change Service Order Verification Messages From Service Order TTY . 108

C. Office Records Administration—Output Form List 109

1. GENERAL

1.01 This section contains procedures for preparing and inputting recent change (RC) service orders at the maintenance or service order TTY. Refer to the current issue of the Input Manual (IM-3H300) and the Output Manual (OM-3H300) for additional information on specific messages. The IM-3H300 and OM-3H300 may be ordered from Western Electric Company, using Form SD 1-80.80. In lieu of Form SD 1-80.80, the documents may be obtained by providing the following information in letter form; order number, ship-to address, area and accounting number, and telephone number. Mail letter or form to Western Electric Company, Hawthorne Station, Dept. 4236, Building 23-6, Chicago, Ill. 60623.

1.02 Whenever this section is reissued, the reason(s) for reissue will be listed in this paragraph.

1.03 The information given in the procedures is for example only. Valid telephone office information should be used when actually engaged in Service Order activities.

1.04 This section provides the procedures for entering recent change service order information into a No. 3 ESS. It also includes information for plant assignment office personnel to type an ESS order direct from the Commercial Department issued service order. The ESS order is then transmitted, via the maintenance TTY or the service order TTY, to the No. 3 ESS where the message is written into memory.

1.05 Figure 1 is a flowchart which illustrates general service order procedures.

Note: Recent change messages should be prepared on tape and edited prior to transmittal to the No. 3 ESS.

1.06 Information pertaining to customer service (such as telephone number, class of service, central office terminal equipment, and special features) is stored in the ESS memory. For customer or company reasons, information pertaining to customer service is constantly subject to change. When a change is required, a new ESS order must be originated.

1.07 The ESS order information transmitted to the ESS must follow input guidelines, and the information must be accurate and complete. Format errors will cause rejection of an ESS order. Clerical errors, such as the transposition of numbers, cannot be recognized by the ESS as errors and will cause incorrect translation data to be written into memory.

1.08 The No. 3 ESS has no provision for a delayed ESS order. A delayed ESS order is an order that is transmitted to the ESS but is not activated until another input request is made.

A. Definitions

1.09 The following terms are defined in accordance with their use in this section.

(a) ***Electronic Switching System***—An electronic switching system which utilizes stored program control to provide telephone service.

(b) ***Memory***—The storage unit into which information can be placed for access at a later time.

(c) ***Translation***—Customer service information contained in the memory such as telephone numbers, central office terminal equipment, and class of service. It does not include cable pair information.

(d) ***Program Store or Main Store***—The semipermanent (read only) memory unit that stores the office translation information, the generic program, and the parameters.

(e) ***Central Processor***—The equipment unit at the No. 3 ESS central office that controls the operations of the other ESS equipment units according to instructions stored in the program store.

(f) ***Cross-Connection Jumper***—It is used at the No. 3 ESS central office to connect the cable pair selected for a particular customer to the central office terminal equipment.

B. Administrative Procedures for Establishing a Line Class Code (LCC)

1.10 A translation committee consisting of plant, commercial, comptroller, and network administrator (traffic dial administrator) representatives will be formed before the cutover of an ESS office. This committee will:

(a) Compile the trunking, routing, and charging information that must be stored in the ESS office memory.

(b) Establish the 3-character alphanumerical LCCs that are to be programmed into the ESS office memory to describe the classes of service.

1.11 There may be times when there is no standard Universal Service Order Code (USOC) to describe the class of service (for example, vacation rate service). In that case, the translation committee will assign a 3-character code to describe the type of service within the ESS office. If there is no LCC to describe the class of service desired, the local company Network Administrator should clear any newly assigned LCC with the AT&T Network Administrator.

1.12 Once these LCCs have been programmed into the ESS office, they are the only codes that may be entered on a service order.

1.13 The Network Administrator will record the LCC on Form ESS 3306-TG3, Line Class Code Table (Fig. 2). The Network Administrator should then:

(a) Send one copy of the form to assignment office personnel for attachment to this section.

(b) Notify the assignment office if any LCCs are changed or added by sending an updated copy of Form ESS 3306-TG3.

1.14 A copy of the LCC assignments can be obtained at the service order TTY. Type:

```
OP:OFR/
FORM 3306/
HDR YES/
END!
```

A printout of Line Class Code Table Form ESS 3306-R (Fig. 3) will follow.

2. TELETYPEWRITER ARRANGEMENTS

2.01 The ESS order information may be sent to the ESS by more than one TTY (Fig. 4). One is a service order TTY located in the assignment office. The others are maintenance TTYs located at the maintenance center or at a remote location. The maintenance TTYs are primarily used for the maintenance of the ESS office and are not generally used for transmitting ESS order information to the ESS.

2.02 The ESS orders are permitted from the service order TTY and the maintenance TTYs, but the ESS can process only one order at a time. When an order is in progress at the service order TTY, an order cannot be inserted at a maintenance TTY. When an ESS order is in progress at a maintenance TTY, an order cannot be inserted at the service order TTY.

SERVICE ORDER TTY

2.03 The service order TTY is a standard 35-type TTY with a No. 3 ESS "Stunt Box" option which is used to type the ESS order information.

2.04 Reference should be made to Fig. 5 and 6 for the service order TTY keyboard and perforated tape used with the service order TTY. The keyboard has uppercase characters in both red and white. These uppercase characters are selected in a similar manner as the capital letters are on a standard typewriter. There are two keys, the SHIFT and CTRL keys. The SHIFT key lettering is white and is used to control the uppercase characters that are lettered white. The CTRL key lettering is red and is used to control the uppercase characters that are lettered red; simply stated, red controls red and white shifts to white.

2.05 ***All uppercase character keys are lettered white with the exception of the following which are lettered red:***

X-ON	STX
WRU	X OFF
TAPE	EOT
~~TAPE~~	VT
TAB	FF
SOH	ETX

2.06 Following is an explanation of commonly used keys:

(a) CTRL—This key must be depressed and held depressed while operating red uppercase keys.

(b) X-ON—This key is the CTRL "Q" and is used to start the transmission of paper tape and turns on the tape reader.

(c) TAPE—This key is the CTRL "R" and is used when perforating tape to turn on a tape perforator. For an ASR type TTY, the mode switch must be in the KT position.

(d) ~~TAPE~~—This key is the CTRL "T" and is used to turn off the tape perforator.

(e) X OFF—This key is the CTRL "S" and is normally used when making tape to insert a character that will stop the sending of the tape. This is used after each line of information on an order or verification message to stop transmission of tape in order to allow the ESS machine to check the accuracy of each line of information before continuing with the next line. The ESS machine will send a signal that will restart the tape.

(f) ETX—This key is the CTRL "C" and is normally used when making tape to insert a character that will inform the ESS machine that this is the last tape message and will take the ESS machine out of tape receive mode. If this character is not used, the ESS machine will remove itself from the tape mode in approximately 45 seconds. No manual messages can be transmitted during this time-out period; however, if manual messages are required, the ESS machine can be taken out of the tape mode by typing ETX (space) X OFF!

(g) SHIFT—This key must be depressed and held depressed while selecting uppercase characters under its control.

(h) !—This exclamation mark is the uppercase 1 which is under the control of the SHIFT key and is used as the "execute" character to end an input message to the ESS, whether preparing tape or directly on-line as when requesting verifications.

(i) LINE FEED—This key is used to automatically advance the paper through the TTY one line at a time. It is mainly used when making tape.

(j) RETURN—This key is used to return the TTY carriage to its left margin and is mainly used when making tape.

(k) RUB OUT—This key is used only when making tape and is used to punch all possible holes across the tape. This character is ignored by the ESS machine and is used to prepare the leading and trailing portion of the tape for ease of handling. It is also used to correct a wrong character on the tape by punching over the incorrect character.

(l) LOC BSP—This key is the local backspace key and is used to back up the tape when a wrong character has been typed in order to remove it by typing over it with the rub out character.

(m) REPT—This key is a repeat key and is most commonly used with the RUB OUT key. By depressing the REPT and RUB OUT keys, the 2 to 3 inches of rub outs requested when preparing tape can be quickly done. The RUB OUT key can be released as soon as rub outs start, and only the REPT key need be held.

(n) LOC LF—This key is the local line feed key and when depressed the TTY will start line feeding and continue until the key is released. Single line feed is next to impossible with this key. This key ***will not*** make an entry on tape.

(o) LOC CR—This key is the local carriage return key and when depressed will return the TTY to its left margin. This key ***will not*** make an entry on tape.

(p) /—The slash is used for No. 3 ESS TTY channels as the "continued input" indication. This character ends a line of input and instructs the program to input this line and that another related data line will be immediately inserted. If the line is in correct format and consistent with preceding lines, the machine will respond with a carriage return (CR) and line feed (LF).

(q) &—The ampersand is not recommended for use while inputting recent change service orders.

(r) $—The dollar sign is used for No. 3 ESS TTY channels as the "line abandon" character. If a mistake is made on any line of input or if an "informational comment" is inserted before the "!" or "/", the "$" may be typed to cause the program to completely ignore that line. The program will respond with a carriage return (CR) and line feed (LF). Any previous lines of a continued input message sequence will remain unaffected.

2.07 Five mode switches are located at the left of the keyboard.

(a) K (keyboard)—Permits transmission from keyboard when the unit is on-line and permits printing of the typed message. Any incoming message is printed only.

(b) KT (keyboard-tape)—Permits transmission from the keyboard when the unit is on-line, the printing of the typed message and the perforation of a tape for the typed message. If the unit is off-line, the typed message is printed and a tape is perforated. An incoming message is printed and a tape is perforated.

(c) T (tape)—Permits transmission from keyboard when the unit is on-line and the perforation of a tape for the typed message. If the unit is off-line, the typed message is perforated on tape. An incoming message is printed and a tape is perforated.

(d) TTS (tape-to-tape send)—Not normally used. If used, it must be coordinated with the receiving TTY.

(e) TTR (tape-to-tape receive)—Not normally used. If used, it must be coordinated with the sending TTY.

KEYWORDS IN ESS ORDERS

2.08 The ESS order is formatted to meet the program requirements of the ESS office. The ESS is a free flow order that uses mnemonic codes known as ***keywords.*** The keyword indicates the type of data that follows, such as TN 555 1212 for telephone number. The keywords and other ESS order information must be in proper language and format. ***The keywords, except for the beginning and ending entries, can be in any sequence. It is recommended that a sequence for typing keywords be adopted that is most convenient for each office. Before the end-of-message keyword is typed, the order should be proofread for typing errors or missing keywords. If a keyword has been inadvertently omitted or typed incorrectly, it can be added or changed and then the end-of-message keyword typed. If other typographical errors are discovered, they must be corrected before the ESS order is transmitted to the ESS office.***

2.09 Table A lists keywords and functions when used in RC messages. Feature keywords are explained in more detail in the Feature Glossary at the end of this section.

PROCEDURE TO ACTIVATE THE SERVICE ORDER TTY ARRANGED FOR AUTOCONNECT

2.10 At the TTY, lift the telephone receiver and dial the assigned "trigger" telephone number for the TTY. Listen for high tone or busy tone. If busy tone is received, hang up and try again later. If high tone is heard, listen for 10 seconds and then hang up. If the No. 3 ESS facility is available, the ESS calls a prestored return telephone number (Service Bureau) associated with the prestored number. When the called party answers, a secure TTY connection with the No. 3 ESS will be in service. Input messages may be typed into the TTY. If no input messages are typed on the TTY for approximately 3 minutes, the autoconnect facility will time out and disconnect the TTY. If the call back has not occurred within 2 minutes, the autoconnect has failed and the caller must redial the trigger number.

MAKING A PAPER TAPE MANUALLY

2.11 The message(s) tape should be perforated while the TTY is in an off-line mode. A TTY connected to the system can be placed off-line by switching to LOCAL. At the end of each message line, after the execute character (! or /) is typed, a reader-off character (X OFF) must be punched and followed immediately by a RUB OUT character. No spaces are allowed between these three characters because the reader stops after the second character following the X OFF. These characters may be optionally followed immediately by the carriage return (CR) and line feed (LF) characters to reposition the off-line TTY printer head for the next line of input. This sequence is performed for each message (line). In the last message (line) on ***every*** physical piece of paper tape, the end of text (ETX) character ***must*** be typed somewhere within the message before the X OFF but not in the middle of a field. The preferred position is just prior to the X OFF. This character signals the system not to turn on the reader after processing the current message.

2.12 The following procedure is an example for typing an ESS order off-line using a tape.

(1) The TTY must be in off-line condition. Operate TTY to LOCAL.

(2) Operate MODE key on left side of TTY to KT position.

(3) Operate the CTRL and TAPE keys to activate the tape perforator.

(4) Operate RUB OUT and REPT keys until 2 to 3 inches of RUB OUT characters are perforated on tape. (This is for ease in handling the tape.)

(5) Type the necessary information using the following format. (The following is an ESS order for a new telephone with 1FR service.)

Note: When use of the CTRL key and X OFF key is required, the CTRL key must be held depressed when the X OFF key is operated.

(a) RC:LINE/(CTRL key and X OFF key) (RUB OUT key, RETURN key, and LINE FEED key)

(b) ORD(space)0001/(CTRL key and X OFF key) (RUB OUT key, RETURN key, and LINE FEED key)

(c) TYP(space)NEW/(CTRL key and X OFF key) (RUB OUT key, RETURN key, and LINE FEED key)

(d) OE(space)00(space)1030/(CTRL and X OFF key) (RUB OUT key, RETURN key, and LINE FEED key)

(e) TN(space)554(space)1234/(CTRL key and X OFF key) (RUB OUT key, RETURN key, and LINE FEED key)

(f) LCC(space)1FR/(CTRL key and X OFF key) (RUB OUT key, RETURN key, and LINE FEED key)

(g) END!(CTRL key and ETX key) (CTRL key and X OFF key)

(6) Operate RUB OUT and REPT keys until 2 to 3 inches of RUB OUT characters are perforated on tape. (This is for ease in handling the tape.)

(7) Operate CTRL and TAPE keys to deactivate tape perforator and remove the tape from the machine.

(8) When transmitted (via tape) to the ESS, the ESS order will appear as follows:

RC:LINE/
ORD 0001/
TYP NEW/
OE 00 1030/
TN 554 1234/
LCC 1FR/
END!

(9) The $ character is used to delete a line in a message that contains incorrect information or to permit the insertion of an "informational comment." In the following example, if the TN in Step 5 should have been 554 1151 and not 554 1234 and the error was detected after 554 12 was typed, the line that contained the incorrect information is deleted as follows:

TN(space)554(space)12$(CTRL key and X OFF key) (RUB OUT key, RETURN key, and LINE FEED key)

(10) The correct information is entered as follows:

TN(space)554(space)1151/(CTRL key and X OFF key) (RUB OUT key, RETURN key, LINE FEED key)

(11) When transmitted (via tape) to the ESS, the ESS order will look like the following:

RC:LINE/
ORD 0001/
TYP NEW/
OE 00 1030/
TN 554 12$
TN 554 1151/
LCC 1FR/
END!

TRANSMITTING A TAPE INTO THE ESS

2.13 The communication between the system and the paper tape is accomplished as follows. The paper tape reader, which may be in a loop by itself or in series with a TTY device, is started and proceeds to the execute character or abandon character, where it stops. This allows the system time to decode and execute the message, and type any required acknowledgment. Unless instructed otherwise, the system will then restart the reader. The transmitting of the tape into the ESS must be coordinated with central office procedure according to local practice.

2.14 Once the tape has been perforated, it is inserted into the tape reader of an on-line TTY channel that is in the STOP position. The reader key is then moved to the RUN position. If the reader does not begin inputting the tape immediately, type in the X-ON character to place the TTY in the tape mode and start the reader. The system ***must*** see the X-ON character to put it into the paper tape mode. At the end of each message, the system automatically issues the next X-ON to restart the reader.

2.15 Once the system has seen the X-ON, it assumes the paper tape mode until the ETX is received. If the ETX is not in the last message (line), the system will restart the reader and continue reading until the physical end of the tape, at which time it will time for 45 seconds. During this time, another tape may be inserted without typing the X-ON character. Since the system is waiting for an input message, one can be typed from the keyboard. In this case, the paper tape mode is still in effect, requiring an ETX and X OFF before the execute character (/ or !). If no operator response is given to the system within 45 seconds, the system will issue a ?T acknowledgment and forcibly take the channel out of the paper tape mode.

2.16 If an error is detected while reading the paper tape, the program will respond as in typed input and will not restart the reader. When a typing error stops the paper tape, the faulty message or line may be retyped on the associated keyboard, if it is available. The paper tape is then restarted manually with the X-ON character.

2.17 To transmit the tape into the ESS system, via the transmitter distributor (TD) (also called tape reader), use the following procedure.

(1) TTY must be in the ON-LINE position.

(2) Move the tape reader switch to the FREE position.

(3) Insert the tape in the tape reader.

(4) Return the tape reader switch to the RUN position.

(5) Depress the KT mode key on left side of TTY, or set the mode switch to the KT position.

(6) Operate the CTRL and TAPE keys to prevent a duplicate tape being perforated.

(7) Operate the CTRL and X-ON keys to start tape reader.

(8) If the reader does not start automatically, hold the CTRL key depressed and operate the X-ON key.

2.18 During the time the tape transmits the data into the ESS system, the TTY prints a copy of the message. When the ESS receives the END! (signifying the end of the message), the ESS sends an acknowledgment (accepting or rejecting message), an X-ON signal (if accepted), a carriage return, and a line feed. If the system sends an OK, this indicates that the message was accepted. If the system sends anything other than OK, this indicates that the message was rejected. (See ***ESS ORDER ACKNOWLEDGMENT.***)

ESS ORDER ACKNOWLEDGMENT

2.19 Each ESS order which the assignment office personnel transmits into the ESS receives an acknowledgment from the ESS. The acknowledgment is a brief output message from the ESS to inform the plant assignment office personnel what action resulted from the ESS order.

2.20 If no errors occurred on input, the first response will be ***WT*** indicating that the recent change program is beginning to process the request. The following acknowledgment messages are returned by the recent change program.

OK—The message was ***OK.*** It was accepted and the work requested has been accomplished. If the message came from paper tape, the paper tape reader will restart.

PF—The message was received and is being acted upon. A ***P***rintout will ***F***ollow. If the message came from paper tape, the paper tape reader will restart.

RL—The message should be ***R***epeated ***L***ater. If the message came from paper tape, the tape reader will not be turned back on. This response may come for any of the following reasons.

(a) If an output was requested, the TTY waiting list may be full.

(b) The TTY program may have missed an input character due to a long scan time. All messages from paper tape are likely to obtain the same result at this time. Try only hand-typed messages if this response persists.

(c) Some other recent change is active.

2.21 Acknowledgment messages are returned by the program when an error is detected. They are typed immediately following the execute character (! or /).

?C—The message appears to be a legal message, but it is not allowed from this channel. The paper tape reader will not restart.

?F—A format error has occurred. The correct characters were not typed. The paper tape reader will not restart.

?I—The first two fields of the message were not legal. The paper tape reader will not restart.

?O—This channel is marked out of service. It must be restored to service before being used. The paper tape reader will not restart.

?P—A TTY parity error occurred during the input message. This message was not accepted by the system. Request TTY diagnostics on the channel being used. The paper tape reader will not restart.

?T—A time-out occurred while waiting for more input characters. This time-out is approximately 45 seconds. See paragraph 3.06 for information on how to avoid timing out. The paper tape reader will not restart.

?X—The channel is in the paper tape mode, and the message does not contain the necessary paper tape control characters. The control characters X OFF and ETX must be used to take the channel out of the current mode.

??—Either a system initialization of some degree occurred during the exception of this message (but not necessarily because of it) or the system has been forced into the digit mode (which could cause the loss of a character). The system cannot tell whether the message is complete. The user must investigate and possibly repeat the message if not completed.

Caution: Do not blindly repeat the message until central office switching personnel have been consulted to determine the reason for this response. The paper tape reader will not restart.

NG—The message was not accepted (*N*o *G*ood). The action or data fields were not accepted. If the message came from paper tape, the paper tape reader will not restart. An error message RC ERR nnnn will follow giving the exact reason. The message must be retyped correctly from the beginning.

END! WT-NG (Note 1)

tt RC ERR nnnn

tt = Number indicating minutes after the hour

RC ERR nnnn = Error message and error number

nnnn = Error number identifying the reason for rejection. (OM-3H300)

The following is an example of an ESS order that was rejected and the reason it was rejected:

RC:LINE/
ORD 1234/
TYP RMV/
OE 00 5223/
TN 554 9971/
END! WT-NG (Note 1)
21 RC ERR 1000 (Note 2)

Note 1: ***NG*** is system response indicating that the ESS order was rejected. NG is not part of the input message.

Note 2: 1000 is an error number identifying the reason for rejection. OM-3H300, RC ERR message, error number 1000, indicates that TYP RMV is not allowed. TYP keywords must be either NEW, CHG, or OUT.

3. PROCESSING AN ESS ORDER

ASSIGNMENT OF ORDER NUMBER TO AN ESS ORDER

3.01 Each ESS order must have from 1- to 4-digit serial number assigned to it. These order numbers range from 0000 to 9999. (The number 0000 or 9999 is generally used as a substitute or dummy number.)

3.02 Each ESS order should be assigned a number starting with the number 0001 and numbered consecutively. ESS Order Log (Fig. 7) is used to maintain a cross-reference of the ESS order to the service order.

3.03 When an ESS order tape is prepared, the DATE USED column should be posted by the employee preparing the tape. At the time the tape is transmitted to the recent change area, the DATE ACTIVATED column should be posted. Other columns should be posted as required.

3.04 The following is a typical ESS order for a new telephone with 1FR service:

RC:LINE/ (Note 1)
ORD 0001/
TYP NEW/
OE 00 2160/
TN 554 1150/
LCC 1FR/
END! WT-OK (Note 2)

Note 1: The RC:LINE indicates that an ESS order is being entered. The slash (/) is used for continued input indication. This character ends a line of input and informs the ESS that another related data line will be immediately inserted. The keyword format and its associated data is checked also.

Note 2: The END! indicates that the message is completed. The OK is the system response indicating that the message was accepted.

TYPING AN ESS ORDER ON-LINE

3.05 All ESS orders should be typed off-line using a tape. If typed on-line, a tape should be made and retained for possible future use. For ease in handling the tape, 2 to 3 inches of rub out characters should be perforated before and after each ESS order.

3.06 An example of an input message is:

VER:LINE:TN nxx xxxx!

Input fields are separated by spaces or colons. Colons are used to separate the action field from adjacent fields except when the action field is the last field. In this case, the execute character is typed in place of the colon following the field. One or more extra spaces may be typed between fields, before the first character, or before the execute character, as convenient. Time-out (?T) can be prevented by typing extra spaces before or after any field. Time-out can also be prevented at any time by typing a rub out character in the input stream.

3.07 An execute character must follow each line of an input message. One or more spaces may precede it, except when the input is coming from paper tape. The standard execute character, the exclamation point (!), is to be used on all single line messages. Where the input message is a multiline input message, the execute character is a slash (/), indicating more information is to follow. The last line of the input must use the exclamation point (!) to indicate the end of the message. The slash must never be used on a single line input message.

TYPING AN ESS ORDER OFF-LINE

3.08 When an ESS order is typed off-line, it is essential that a paper tape is punched simultaneously. The tape is needed for transmitting the order to the ESS. A tape is punched by the typing reperforator while the ESS order is being typed. This should be done with the service order TTY in the off-line (local) mode. This method allows for proofreading the ESS order prior to transmitting the order to the ESS. Proofreading is essential in order to minimize the possibility of transmitting errors to the central processor which are time consuming and costly to correct. In using this procedure, a backup file of tapes will be available in the event they are needed. Tape input also assures rapid inputting or changes that require two separate message sequences (such as changing the party number of an assigned TN).

3.09 Figure 1 illustrates the preparation and processing of ESS orders and tapes.

4. FLOWCHARTS

4.01 The RC message flowcharts are used to illustrate formats for ESS service order RC messages. Messages which may be input at the service order TTY are listed in Table B. Table B also lists related verification messages.

4.02 The service order RC message flowchart utilizes the flowlines, dummy lower case letters to specify data variables, and option symbols to define the group (set) of all valid RC messages.

A. Option Symbols

4.03 Four symbols (Fig. 8) are used.

OPTION Symbol: The OPTION symbol indicates that all flowlines leaving the symbol are optional. None, one, some, or all such flowlines may be selected.

EXCLUSIVE OR Symbol: The EXCLUSIVE OR symbol indicates that exactly ***one*** of the two or more flowlines leaving the symbol must be selected.

NON-EXCLUSIVE OR Symbol: The NON-EXLUSIVE OR symbol indicates that one or more of the five flow lines leaving the symbol must be selected.

AND Symbol: The AND symbol indicates that all flowlines leaving the symbol must be used.

B. Flowlines

4.04 Flowlines interconnect option symbols and indicate the keywords which may possibly be used. Keywords used in a message depend on the requirements of the service order being processed.

C. List of Flowcharts

SINGLE PARTY OR COIN LINE MESSAGE (RC:LINE) FLOWCHARTS

(a) RC:LINE, TYP NEW Message Flowchart (Fig. 9)

(b) RC:LINE, TYP CHG Message Flowchart (Fig. 10)

(c) RC:LINE, TYP OUT Message Flowchart (Fig. 11)

TWO-PARTY LINE MESSAGE (RC:TWOPTY) FLOWCHARTS

(a) RC:TWOPTY, TYP NEW Message Flowchart (Fig. 12)

(b) RC:TWOPTY, TYP CHG Message Flowchart (Fig. 13)

(c) RC:TWOPTY, TYP OUT Message Flowchart (Fig. 14)

MULTIPARTY LINE MESSAGE (RC:MPTY) FLOWCHARTS

(a) RC:MPTY, TYP NEW Message Flowchart (Fig. 15)

(b) RC:MPTY, TYP CHG Message Flowchart (Fig. 16)

(c) RC:MPTY, TYP OUT Message Flowchart (Fig. 17)

ASSIGNMENTS FOR TERMINALS IN MULTILINE HUNTING GROUP (RC:MTL) FLOWCHARTS

(a) RC:MTL, TYP NEW Message Flowchart (Fig. 18)

(b) RC:MTL, TYP CHG Message Flowchart (Fig. 19)

(c) RC:MTL, TYP OUT Message Flowchart (Fig. 20)

ASSIGNMENTS FOR MULTILINE HUNTING GROUP (RC:MLHG) FLOWCHARTS

(a) RC:MLHG, TYP NEW Message Flowchart (Fig. 21)

(b) RC:MLHG, TYP CHG Message Flowchart (Fig. 22)

(c) RC:MLHG, TYP OUT Message Flowchart (Fig. 23)

CALL FORWARDING FLOWCHARTS

RC:CFN Message Flowchart (Fig. 24)

SPEED CALLING RC:SCN MESSAGE FLOWCHART

RC:SCN Message Flowchart (Fig. 25).

5. EXAMPLES OF SINGLE PARTY, 2-PARTY, MULTIPARTY, AND COIN LINE MESSAGES

5.01 This part provides examples of many commonly used RC service order messages. Flowcharts (Fig. 9 through 17) illustrate RC service order messages which can be input at the service order TTY. Keywords for RC messages are listed in paragraph 2. Feature keywords are described in detail in the Feature Glossary (paragraph 13).

5.02 Office records of line assignments are maintained on Forms ESS 3xxx-TG3 in accordance with Translation Guide TG3. Similar records are stored in ESS memory and may be obtained on Forms ESS 3xxx-R by typing OP:OFR messages (paragraph 12) at the Service Order TTY. Examples of available office records forms are:

ESS 3100-TG3 Telephone Number Table (Fig. 26)

ESS 3100-R Telephone Number Table (Fig. 27)

ESS 3107-TG3 Supplementary Information Tables (Fig. 30 and 31)

ESS 3107-1R Supplementary Information Table (Fig. 32)

ESS 3107-2R Supplementary Information Table (Fig. 33)

ESS 3171-R Office Equipment Number (Fig. 34)

ESS 3306-TG3 Line Class Code Table (Fig. 2)

ESS 3306-R Line Class Code Table (Fig. 3).

5.03 The following notes should be considered when ESS orders are being prepared:

Note 1: The base rate area can be defined as that portion of an exchange area in which tariff-specified types and grades of service are furnished at base rates. The base rates do not vary with the distance from the central office rate center without mileage, locality, or zone changes. If only one rate area is defined within an office, it is always assumed to be rate area 0, and no input information is required. If a line must be defined as in other than rate area 0, an additional input line is required in the ESS order to specify the rate area:

RAX a/

a = Rate area number.

Note 2: On all party line ESS orders (NEW, CHG, or OUT), the party number is needed to identify the line.

5.04 Assignments for a line (not in a multiline hunting group) are made by one of three messages:

- RC:LINE, used to assign a single party or coin line
- RC:TWOPTY, used to assign 2-party lines
- RC:MPTY, used to assign multiparty lines.

5.05 Each message is one of three types:

- TYP NEW, used to assign new lines
- TYP CHG, used to add or change line assignments
- TYP OUT, used to remove all assignments for a line.

5.06 For assignment of lines (terminals) in a multiline hunting group, see paragraph 8. Examples of lines in series completion groups are in paragraph 6.

A. New Line Assignments

5.07 Flowcharts Fig. 9, 12, and 15 illustrate the assignment of new single party or coin lines, 2-party lines, and multiparty lines. An example for the assignment of a new single party line is:

RC:LINE/
ORD 0002/
TYP NEW/
TN 554 1111/
OE 00 3060/
LCC 1FR/
BTN 554 2135/
TTC YES/
EL YES/
ESL YES/
CSL1 YES/
ESX YES/
SOB YES/
TRC YES/
RMK EXAMPLE/
END!

5.08 The message (paragraph 5.07) includes RC:LINE/, ORD 0002/, TYP NEW/, and TN 554 1111/ which are always required. OE 00 3060/ is included, since the new line will not be on intercept or special routing. LCC 1FR indicates single party flat rate service. The keyword RAX n is not included in the message, since the rate area is assumed to be 0.

5.09 BTN 554 1135 provides billing to telephone number 554 1135 instead of TN 554 1111.

5.10 The remaining lines of the message which include "YES" assign various features to the line.

5.11 RMK keyword adds EXAMPLE in the REMARKS column of ESS Form 3100-R. See Fig. 9.

Individual Party Flat Rate—Residential Service (1FR)

5.12 Example:

RC:LINE/
ORD 0001/
TYP NEW/
TN 554 1111/
OE 00 3060/
LCC 1FR/

RAX 1/
RMK PER FIG 9/
END!

Individual Party Flat Rate—Business Service (1FB)

5.13 Example:

RC:LINE/
ORD 0002/
TYP NEW/
TN 554 1135/
OE 01 1060/
LCC 1FB/
RAX 1/
END!

Two-Party Flat Rate—Residential Service (2FR)—Ring Party

5.14 On all party line ESS orders (NEW, CHG, or OUT), the party number is needed to identify the line.

5.15 Example:

RC:TWOPTY/
ORD 0004/
TYP NEW/
TN 554 3051/
OE 01 2160/
LCC 2FR/
PTY 1/
RAX 1/
RMK PER FIG 12/
END!

Two-Party Flat Rate—Residential (2FR)—Tip Party

5.16 Example:

RC:TWOPTY/
ORD 0005/
TYP NEW/
TN 554 3134/
OE 00 3260/
LCC 2FR/
PTY 2/
RAX 1/
END!

Multiparty Flat Rate—Residential (4FR)—Party 3

5.17 Example:

RC:MPTY/
ORD 2103/
TYP NEW/
TN 554 1111/
OE 00 3060/
LCC 4FR/
PTY 3/
RAX 1/
RMK PER FIG 15/
END!

Coin Service—Dial Tone First

5.18 Example:

RC:LINE/
ORD 0021/
TYP NEW/
TN 554 9910/
OE 00 3460/
LCC DTF/
DPCN 0 111 2 2/ (Note)
END!

Note: DPCN is always required for dial tone first lines.

Coin Service—Coin First

5.19 Example:

RC:LINE/
ORD 0022/
TYP NEW/
TN 354 9036/
OE 01 1077/ (Note 1)
LCC 1SP/
TTC YES/ (Note 2)
DPCN 0 111 3 3/ (Note 2)
GST YES/
END!

Note 1: The service order must be coordinated with central office personnel who will restrap the line ferrod for ground start.

Note 2: DPCN is not required for coin first lines equipped with rotary dials. DPCN is optional for coin first lines equipped with TOUCH-TONE® dials. Use of DPCN with

TOUCH-TONE equipped lines helps prevent fraud during coin deposit.

Bill to Number (BTN)

5.20 The bill to number (BTN) is a telephone number to which a customer telephone service is billed. The BTN must be an office code defined in that office.

Note: This feature is not applicable to 2-party and multiparty lines.

5.21 Example:

```
RC:LINE/
ORD 0030/
TYP NEW/
TN 554 1111/
OE 00 3060/
LCC 1FB/
RAX 1/
BTN 554 1135/
END!
```

Call Forwarding (ESM)

5.22 Call forwarding provides the capability for a customer to have all incoming calls routed to another telephone number. To use this feature, the customer dials the access code 72. Upon hearing second dial tone, the customer dials the 7-digit or 10-digit number to which call is to be transferred if the trunk group is marked to indicate that call forwarding is allowed. The number dialed will then be rung. If it is answered, the forwarding is established. If the number is not answered, the forwarding will not be established unless the customer repeats the dialing process within 2 minutes of the first procedure. The customer will hear two bursts of tone and the number dialed will again be rung. This establishes the forwarding even though the number dialed is not answered. To cancel the call forwarding, the customer must dial the access code 73 and wait for a 4-second time-out. A # symbol may be substituted for the 4-second time-out on 12-button TOUCH-TONE sets. While forwarding is in effect, calls may be originated from the line normally, but all incoming calls are routed to the line which is forwarded.

Note: Party lines, manual lines, coin lines, and measured rate lines cannot have the call forwarding feature.

5.23 Example:

```
RC:LINE/
ORD 0100/
TYP NEW/
TN 554 1111/
OE 01 3060/
LCC 1FB/
ESM YES/
END!
```

Call Waiting (ESX)

5.24 Call waiting is a feature that informs a customer who is talking on the line that an incoming call is waiting and allows the customer to hold the existing connection to answer the new call. A call waiting tone indicates to the customer that a call is waiting. If the customer takes no action, the tone is repeated once 10 seconds later. To answer the incoming call, the customer depresses the switchhook momentarily. This puts the existing party on hold and answers the incoming call. By depressing the switchhook again, the customer can place the new call on hold and return to the original call. Note that all three cannot be brought together in a conference state. If the customer with ESX hangs up with a party on hold or on call waiting, the customer is rung and is connected to the held call upon answer. If a party on hold or on call waiting hangs up, the line is disconnected. If the party being talked to hangs up, the customer can talk to another party on hold or on call waiting by momentarily depressing the switchhook.

Note: Party lines, manual lines, and coin lines cannot have the call waiting feature.

5.25 Example:

```
RC:LINE/
ORD 0103/
TYP NEW/
TN 554 3051/
OE 01 2160/
LCC 1FB/
RAX 1/
ESX YES/
END!
```

Threeway Calling (ESC)

5.26 This feature allows the customer to add a third party to any established call. Add-on

is another name for this feature referred to in other systems as consultation hold. The ability to hold one party with privacy exclusion while talking to another and the ability to add the third party on a threeway connection are combined in the threeway calling function.

Note: This feature is not applicable to 2-party and multiparty lines.

5.27 Example:

```
RC:LINE/
ORD 0129/
TYP NEW/
TN 554 1111/
OE 01 3060/
LCC 1FR/
RAX 1/
ESC YES/
END!
```

TOUCH-TONE Calling

TOUCH-TONE CALLING (TTC) 2-Party Lines

5.29 An example of a new 2-party line assignment, both parties TOUCH-TONE Calling is:

```
RC:TWOPTY/
ORD 6134/
TYP NEW/
TN 554 2201/
OE 01 2115/
LCC 2FR/
PTY 1/
TTC YES/
END!

RC:TWOPTY/
ORD 6135/
TYP NEW/
TN 554 2103/
OE 01 2115/
LCC 2FR/
PTY 2/
TTC YES/
END!
```

5.30 An example of a new 2-party line assignment, one party TOUCH-TONE and the other party rotary dial, is:

```
RC:TWOPTY/
ORD 6136/
TYP NEW/
TN 554 2201/
OE 01 2115/
LCC 2FR/
PTY 1/
TTC YES/
END!

RC:TWOPTY/
ORD 6137/
TYP NEW/
TN 554 2103/
OE 01 2115/
LCC 2FR/
PTY 2/
END!
```

TOUCH-TONE Calling (TTC) Single Party Line

5.28 An example of a new single party line installation with TOUCH-TONE Calling is:

```
RC:LINE/
ORD 0132/
TYP NEW/
TN 554 1201/
OE 01 2160/
LCC 1FR/
RAX 1/
TTC YES/
END!
```

TOUCH-TONE Multiparty Lines

5.31 For multiparty lines, all parties must be TOUCH-TONE or all parties must be rotary.

5.32 An example of a multiparty (4-party) line with TOUCH-TONE Calling is:

```
RC:MPTY/
ORD 5001/
TYP NEW/
TN 551 2203/
OE 00 2214/
LCC 4FR/
PTY 1/
```

TTC YES/ (Note)
END!

Note: When parties 2, 3, and 4 are assigned, TTC YES/should be included in the assignment messages.

5.33 An example of a multiparty (8-party) line with rotary dialing is:

RC:MPTY/ (Note)
ORD 3468/
TYP NEW/
TN 551 2204/
OE 01 2224/
LCC 8FR/
PTY 1/
END!

Note: Rotary dialing is provided since TTC was not included in the message. Do not include TTC when parties 2 through 8 are assigned.

Call Trace (Calling Line Identification) (TRC)

5.34 This feature provides calling identification on all incoming calls to a telephone number and types a record on the central office maintenance TTY. When a call attempt is made to a telephone number which has the trace feature applied, a TTY message is printed, regardless of whether or not the call is completed.

5.35 Examples:

RC:LINE/
ORD 0150/
TYP NEW/
TN 554 1111/
OE 00 3060/
LCC 1FR/
TRC YES/ (Note)
or TRC MN/ (Note)
or TRC MJ/ (Note)
END!

Note: See flowchart (Fig. 9) for use of TRC MN/ and TRC MJ/.

New 2-Party Line With Call Trace

RC:TWOPTY/
ORD 0251/
TYP NEW/
TN 554 1112/
OE 01 3061/
LCC 2FR/
PTY 1/
TRC YES/ (Note)
or TRC MN/ (Note)
or TRC MJ/ (Note)
END!

Note: See flowchart (Fig. 12) for use of TRC MN/ and TRC MJ/.

New Multiparty Line Installation With Call Trace

RC:MPTY/
ORD 0252/
TYP NEW/
TN 554 1113/
OE 01 3062/
LCC 4FR/
PTY 3/
TRC YES/ (Note)
or TRC MN/ (Note)
or TRC MJ/ (Note)
END!

Note: See flowchar (Fig. 15) for use of TRC MN/ and TRC MJ/.

Hardware Message Register (DPM)

5.36 Single party and 2-party lines can be assigned hardware message registers. Multiparty lines (4-party and 8-party), mobile radio lines, and coin lines are not permitted to be equipped with hardware message registers.

5.37 Example:

RC:LINE/
ORD 0103/
TYP NEW/
TN 554 3051/
OE 01 2160/
LCC 1MR/
DPM 0 142 3/
END!

Software Message Register (MR)

5.38 Single party and 2-party lines can be assigned software message registers. Multiparty lines

(4-party and 8-party) are not permitted software message register assignments.

5.39 Example:

```
RC:LINE/
ORD 0104/
TYP NEW/
TN 554 3052/
OE 01 2161/
MR 0101/
LCC 1FR/
END!
```

Ground Start (GST)

5.40 Example:

```
RC:LINE/
ORD 0001/
TYP NEW/
TN 555 1212/
OE 01 0271/
LCC 1FB/
GST YES/
END!
```

5.41 The GST assignment is not applicable to 2-party and multiparty lines.

5.42 The service order must be coordinated with work in the office to restrap the line ferrod for ground start.

Wide Area Telephone Service (WATS)

5.43 If WATS has not been defined previously, a line class code, charge index tables, a screening class, and appropriate screening tables must be defined and entered into memory from the maintenance TTY. The RC:LCC, RC:SCR, and RC:CHI messages required cannot be input from the service order TTY.

5.44 If WATS has been defined by the appropriate maintenance TTY messages, WATS service can be assigned at the service order TTY by an RC:LINE message. A typical example is:

```
RC:LINE/
ORD 0012/
TYP NEW/
TN 231 7846/
OE 03 1276/
LCC WAT/
WATS 086 2176/ (Note 1)
RTI 033/ (Note 2)
TTC YES/(TOUCH-TONE service)
ESF YES/ (Speed call 30 list provided)
END!
```

Note 1: WATS billing number 086 2176.

0 = Designation for full time WATS. If WATS was to be measured, the numeral 1 would be used.

8 = Assigned by telephone company and used to represent the local state for identification purposes.

6 = Service area or band subscribed to.

2176 = Represents the special billing number which is obtained from the state WATS coordinating group.

Note 2: If the terminating major class of the line is 30, a route index must be assigned.

B. Change Line Assignments

5.45 Flowcharts Fig. 10, 13, and 16 illustrate the RC messages (TYP CHG) for changing assignments for single party or coin lines, 2-party lines, and multiparty lines. The TYP OUT message is used to remove all assignments for a line.

5.46 For example, a TYP CHG message could be used to change the assignments for TN 554 1111 which were originally made by a TYP NEW message (paragraph 5.07).

- The TYP NEW message included "TRC YES"/, the call trace feature. The TYP CHG message to remove the call trace feature is:

```
RC:LINE/
ORD 2314/
TYP CHG/
TN 554 1111/
OE 00 3060/
TRC NO/
RMK SEE FIG 10/
END!
```

- The TYP NEW message (paragraph 5.07) did not assign the call forwarding (ESM) feature for TN 554 1111/. The message to add call forwarding is:

```
RC:LINE/
ORD 2315/
TYP CHG/
TN 554 1111/
OE 00 3060/
ESM YES/
RMK SEE FIG 10/
END!
```

Free Terminating Service

5.47 Free terminating service is provided by the assignment of the LCC to a line. Party lines are not permitted to have free terminating service.

5.48 ***An example of adding Free Terminating Service is:***

```
RC:LINE/
ORD 0143/
TYP CHG/
TN 554 1135/
OE 01 1060/
LCC 1OF/
RAX 1/
RMK OPTIONAL/
END!
```

5.49 ***An example of removing Free Terminating Service is:***

```
RC:LINE/
ORD 0144/
TYP CHG/
TN 554 1135/
OE 01 1060/
LCC 1FR/ (Note)
RAX 1/
RMK PER FIG 10/
END!
```

Note: Use nonfree LCC (Fig. 2 or Fig. 3).

Suspended Service

5.50 In order to suspend (deny) service, an LCC is used whose expansion yields a major class of denied service. This LCC must be one of the LCCs recorded on the Line Class Code Table, Form ESS 3306 (Fig. 2 or Fig. 3).

Note 1: For a party line, the party number is needed to identify the line. The 4- and 8-party lines can only have terminating service suspended.

Note 2: When suspending terminating or both originating and terminating service, a route index (RTI) should be used.

Suspend Originating Service Only—Single Party Line

5.51 Example:

```
RC:LINE/
ORD 0023/
TYP CHG/
TN 554 3485/
OE 00 3260/
LCC DO1/
RAX 1/
RMK SUS ORIG/
END!
```

Suspend Originating Service—2-Party Line

5.52 Example:

```
RC:TWOPTY/
ORD 5001/
TYP CHG/
PTY 1/
TN 554 5843/
OE 00 3236/
LCC DO2/
RMK SUS ORIG/
END!
```

Suspended Terminating Service—Single Party Line

5.53 Example:

```
RC:LINE/
ORD 0004/
TYP CHG/
TN 554 3051/
OE 01 2160/
LCC DT1/
RTI 009/
RAX 1/
```

RMK AS PER FIG 10/
END!

Suspended Terminating Service—2-Party Line

5.54 Example:

RC:TWOPTY/
ORD 8156/
TYP CHG/
TN 554 2051/
OE 01 2260/
PTY 2/
LCC DT2/
RTI 009/
RAX 1/
RMK AS REQ FIG 13/
END!

Suspended Terminating Service—Multiparty Line

5.55 Example:

RC:MPTY/
ORD 3201/
TYP CHG/
TN 554 2062/
OE 01 1004/
PTY 4/
LCC DT5/
RTI 009/
RMK SEE FIG 16/
END!

Suspended Originating and Terminating Service—Single Party Line

5.56 Example:

RC:LINE/
ORD 3608/
TYP CHG/
TN 553 4082/
OE 00 3061/
LCC DOT/
RTI 009/
RMK PER FIG 10/
END!

Suspended Originating and Terminating Service—2-Party Line

5.57 Example:

RC:TWOPTY/
ORD 6304/
TYP CHG/
TN 554 5844/
OE 00 3065/
PTY 1/
LCC SUS/
RTI 009/
RMK PER FIG 13/
END!

Restoration of Suspended Service

Caution: Extreme care should be taken to use the original LCC in the ESS order when restoring service to a line. The use of an incorrect LCC can cause translation problems.

Restoring Temporarily Suspended Service—Single Party Line

5.58 Example:

RC:LINE/
ORD 1000/
TYP CHG/
TN 554 3485/
OE 00 3260/
LCC 1FR/
RAX 1/
RMK 13 MAX CHAR/
END!

Restoring Suspended Service—2-Party Line

5.59 Example:

RC:TWOPTY/
ORD 1001/
TYP CHG/
TN 554 2051/
OE 01 2260/
PTY 1/
LCC 2FR/
RAX 1/
RMK 13 MAX CHAR/
END!

Restoring Suspended Service—Multiparty Line

5.60 Example:

```
RC:MPTY/
ORD 1003/
TYP CHG/
TN 554 2062/
OE 01 1004/
PTY 4/
LCC 4FR/
RAX 1/
RMK PER FIG 15/
END!
```

Changing Office Equipment Number—Using the Same Telephone Number

5.61 Changing the office equipment number (OE) requires coordination between the assignment office and the frame personnel.

Single Party Line

5.62 Example:

```
RC:LINE/
ORD 0130/
TYP CHG/
TN 554 1135/
OE 01 1060/ (Note 1)
IOE 01 1001/ (Note 2)
RMK PER FIG 10/
END!
```

Note 1: Old office equipment number.

Note 2: New office equipment number.

Two-Party Line

5.63 To change the office equipment number of one party of a 2-party line without changing the telephone number, the party must be removed from service by a TYP OUT order and reassigned by a TYP NEW order.

5.64 Example:

```
RC:TWOPTY/
ORD 0123/
TYP OUT/
TN 554 1136/
OE 01 1032/
PTY 1/
RMK PER FIG 14/
END!

RC:TWOPTY/
ORD 0124/
TYP NEW/
TN 554 1136/
OE 01 1046/
LCC 2FR/
PTY 1/
RMK PER FIG 12/
END!
```

Multiparty Line

5.65 To change the office equipment number of one party of a multiparty line without changing the telephone number, the party must be removed from service by a TYP OUT order and reassigned by a TYP NEW order.

5.66 Example:

```
RC:MPTY/
ORD 0125/
TYP OUT/
TN 554 1137/
OE 01 1115/
PTY 1/
RMK PER FIG 17/
END!

RC:MPTY/
ORD 0126/
TYP NEW/
TN 554 1137/
OE 01 0003/
PTY 3/
LCC 4FR/
RMK PER FIG 15/
END!
```

Changing Telephone Number—Using the Same Office Equipment Number

5.67 In the following examples, telephone number (TN) will become unassigned. Calls to old TN will be routed to machine recording intercept. If operator intercept is desired, see paragraph 5.130.

5.68 ***Example Single Party Line***

RC:LINE/
ORD 0101/
TYP CHG/
TN 554 1135/
OE 01 1060/
NTN 554 1162/
RMK PER FIG 10/
END!

5.69 ***Example 2-Party Line***

RC:TWOPTY/
ORD 0101/
TYP CHG/
TN 554 1136/
OE 01 1061/
PTY 1/
NTN 554 1162/
RMK PER FIG 13/
END!

5.70 ***Example Multiparty Line***

RC:MPTY/
ORD 0102/
TYP CHG/
TN 554 1137/
OE 10 1061/
PTY 3/
NTN 554 1163/
RMK PER FIG 16/
END!

Type of Service

5.71 Changing the type of service usually involves upgrading or downgrading single party, 2-party, or multiparty service. Two RC messages are required. First, the party must be removed from service by a TYP OUT order. Second, the party must be restored to service by a TYP NEW order.

5.72 Use this format for the first order:

RC:TWOPTY/
ORD 0016/
TYP OUT/
TN 554 3485/
OE 00 3260/
PTY 2/
RMK PER FIG 14/
END!

5.73 Use this format for the second order:

RC:LINE/
ORD 0017/
TYP NEW/
TN 554 3485/
OE 01 2115/
LCC 1FR/
RAX 1/
RMK PER FIG 9/
END!

Bill to Number (BTN)

5.74 The bill to number (BTN) is a telephone number to which a customer telephone service is billed. The BTN must be an office code defined in that office. The BTN feature is not allowed on party lines.

Adding or Changing Bill to Number

5.75 Example:

RC:LINE/
ORD 0031/
TYP CHG/
TN 554 1201/
OE 00 2160/
BTN 554 1111/
RMK PER FIG 10/
END!

Removing Bill to Number

5.76 Example:

RC:LINE/
ORD 3204/
TYP CHG/
TN 554 1201/
OE 00 2160/
BTN NO/
RMK PEG FIG 10/
END!

Speed Calling Feature

5.77 The speed calling feature may be assigned a line at the time the original assignment of the line is made by the RC:LINE, TYP NEW message. The feature may be added later by the RC:LINE, TYP CHG message.

5.78 Speed calling features cannot be assigned to party lines, manual lines, or coin lines.

Adding 1-Digit Speed Calling (ESL) Feature

5.79 To assign the 1-digit speed calling (8-number repertory) feature to an existing line:

RC:LINE/
ORD 0001/
TYP CHG/
TN 555 1212/
OE 01 0233/
ESL YES/
CSL1 YES/
RMK PER FIG 10/
END!

5.80 The numbers are stored in the list either by customer action (paragraph 5.85) or by the Operating Company (paragraph 5.83). These numbers are accessed by dialing the single speed calling digit (2 through 9) and then either the # digit or waiting for a 4-second time-out.

Adding 2-Digit Speed Calling (ESF) Feature

5.81 To assign the 2-digit speed calling feature (30-number repertory) to an existing line:

RC:LINE/
ORD 0001/
TYP CHG/
TN 555 1213/
OE 01 0234/
ESF YES/
CSL2 YES/
RMK PER FIG 10/
END!

5.82 The numbers are stored in the list either by customer action (paragraph 5.85) or by the Operating Company (paragraph 5.83). These numbers are accessed by dialing the 2-digit speed calling code (20 through 49) and then either the # digit or waiting for a 4-second time-out.

Changing Speed Calling Lists at the TTY

5.83 Example:

RC:SCN/
ORD 6781/
TN 555 1212/
ADN 6/
DGS 555 1232/
OE 01 0234/
END!

5.84 The customer may now dial 6 and be connected to telephone number 555 1232.

Customer Dialed Changes to Speed Calling Lists

5.85 The customer dialed change capability is provided by inclusion of the CSL1 and/or CSL2 keywords in the assignment message. For example, see paragraphs 5.79 and 5.81.

5.86 The speed calling change feature allows a customer to directly dial changes into his speed call lists. This is performed by going off-hook and dialing 74 and then the # digit or waiting for a 4-second time-out for a 1-digit speed calling list change, or 75 and then the # digit or waiting for a 4-second time-out for a 2-digit speed calling list change. Upon receipt of a second dial tone, the dial code to be changed is dialed (one or two digits) and then the number to be associated with this code. The range of the 1-digit codes is 2 through 9 and 20 through 49 for the 2-digit codes. The number may be 7, 8, 10, or 11 digits in length plus a prefix. After dialing is completed, a confirmation is returned of 100 milliseconds of dial tone, 100 milliseconds of silence, and then 300 milliseconds of dial tone. Examples of this dial sequence are provided in the following paragraphs.

5.87 Examples of 1-digit speed calling:

74-2-1-201-555-1212 Example for a TN of 11 digits

74-4-201-555-1212 Example for a TN of 10 digits

74-6-1-555-1212 Example for a TN of 8 digits

74-8-555-1212 Example for a TN of 7 digits.

5.88 Examples for 2-digit speed calling:

75-20-1-201-555-1212 Example for a TN of 11 digits

75-36-201-555-1212 Example for a TN of 10 digits

75-40-1-555-1212 Example for a TN of 8 digits

75-48-555-1212 Example for a TN of 7 digits.

5.89 A non-MLHG line may remove an entry from the list and not insert another by dialing in his own telephone number as the new number for that dial code being changed.

Removing 1-Digit Speed Calling (ESL) Feature

5.90 Example:

```
RC:LINE/
ORD 0001/
TYP CHG/
TN 555 1212/
OE 01 0233/
ESL NO/
RMK PER FIG 10/
END!
```

Removing 2-Digit Speed Calling (ESF) Feature

5.91 Example:

```
RC:LINE/
ORD 0001/
TYP CHG/
TN 555 1212/
OE 01 0233/
ESF NO/
RMK PER FIG 10/
END!
```

Call Forwarding (ESM)

5.92 Call forwarding allows a customer to have all incoming calls routed to another telephone number. To use this feature, the customer dials the access code 72. Upon hearing second dial tone, the customer dials the 7-digit or 10-digit number to which calls are to be transferred if the trunk group is marked to indicate that call forwarding is allowed. The number dialed will then be rung. If it is answered, the forwarding is established. If the number is not answered, the forwarding will not be established unless the customer repeats the dialing procedures within 2 minutes of the first procedure. The customer will hear two bursts of tone, and the number dialed will again be rung. This establishes the forwarding even though the number dialed is not answered. To cancel the call forwarding, the customer must dial the access code 73 and wait for a 4-second time-out. A # symbol may be substituted for the 4-second time-out on 12-button TOUCH-TONE sets. While forwarding is in effect, calls may be originated from the line normally, but all incoming calls are routed to the line which is forwarded.

5.93 Party lines cannot have the call forwarding feature.

Adding Call Forwarding

5.94 Example:

```
RC:LINE/
ORD 0101/
TYP CHG/
TN 554 1135/
OE 01 1060/
ESM YES/
RMK PER FIG 10/
END!
```

Removing Call Forwarding (ESM)

5.95 Example:

```
RC:LINE/
ORD 2001/
TYP CHG/
TN 554 1135/
OE 01 1060/
ESM NO/
RMK PER FIG 10/
END!
```

Call Waiting (ESX)

5.96 Call waiting is a feature that informs a customer who is talking on the line that an incoming call is waiting and allows the customer to hold the existing connection to answer the new call. A call waiting tone indicates to the customer that a call is waiting. If the customer takes no action, the tone is repeated once 10 seconds later. To answer the incoming call, the customer depresses the switchhook momentarily. This puts the existing party on hold and answers the incoming call. By depressing the switchhook again, the customer can place the new call on hold and return to the original call. Note that all three cannot be brought together in a conference state. If the customer with ESX hangs up with a party on hold or on call waiting, the customer is rung and is connected to the held call upon answer. If a party on hold or on call waiting hangs up, the line is disconnected. If the party being talked to hangs up, the customer can

talk to another party on hold or on call waiting by momentarily depressing the switchhook.

5.97 Party lines, manual lines, and coin lines cannot have the call waiting feature.

Adding Call Waiting

5.98 Example:

```
RC:LINE/
ORD 0104/
TYP CHG/
TN 554 3051/
OE 01 2160/
ESX YES/
RMK PER FIG 10/
END!
```

Removing Call Waiting

5.99 Example:

```
RC:LINE/
ORD 0105/
TYP CHG/
TN 554 3051/
OE 01 2160/
ESX NO/
RMK PER FIG 10/
END!
```

Threeway Calling (ESC)

5.100 The threeway calling feature allows a customer to add another party to a call already established. To use this feature, the customer depresses the switchhook momentarily while talking to another party. This will give the customer dial tone so that the second number may be dialed. The customer may now talk to this party privately. The original party is on hold until the customer operates the switchhook to connect all three in the conference mode. This may be accomplished before or after the second party answers. If the party to be added on does not answer, operation of the switchhook will add on the original party and a second operation of the switchhook will disconnect the second party. If either of the two parties the customer is talking with hangs up, the remaining line will still be connected. If the customer hangs up all three lines will be disconnected.

Note: Party lines, manual lines, and coin lines cannot have the threeway calling feature.

Adding Threeway Calling

5.101 Example:

```
RC:LINE/
ORD 0130/
TYP CHG/
TN 554 1135/
OE 01 1060/
ESC YES/
RMK PER FIG 10/
END!
```

Removing Threeway Calling

5.102 Example:

```
RC:LINE/
ORD 0131/
TYP CHG/
TN 554 1135/
OE 01 1060/
ESC NO/
RMK PER FIG 10/
END!
```

TOUCH-TONE Calling (TTC)

TOUCH-TONE Calling—Single Party Line

5.103 To add or remove TOUCH-TONE Calling include the keyword TTC in a TYP CHG message. For example:

```
RC:LINE/
ORD 6304/
TYP CHG/
TN 554 1201/
OE 01 2160/
TTC YES/  or TTC NO/
END!
```

TOUCH-TONE Calling—2-Party Lines

5.104 To add or remove TOUCH-TONE Calling include the keyword TTC in a TYP CHG message. For example:

```
RC:TWOPTY/
ORD 7846/
TYP CHG/
```

TN 554 2201/
OE 01 2115/
PTY 1/
TTC YES or TTC NO/
END!

TOUCH-TONE Calling—Multiparty Lines

5.105 The addition or removal of TTC for any party on a multiparty line adds or removes the feature for all parties. For example:

RC:MPTY/
ORD 3206/
TYP CHG/
TN 551 2203/
OE 01 2214/
PTY 1/
TTC YES/ or TTC NO/ (Note)
END!

Note: The keyword TTC YES/ adds TTC for all parties. TTC NO/ removes TTC for all parties.

Essential Line Service (EL)

5.106 Essential service is a class A line assigned to selected customers to protect exchange service.

Note: For a party line, the party number is needed to identify the line.

Adding Essential Line Service

5.107 Example:

RC:LINE/
ORD 0136/
TYP CHG/
TN 554 1135/
OE 01 1060/
EL YES/
RMK PER FIG 10/
END!

Removing Essential Line Service (EL)

5.108 Example:

RC:LINE/
ORD 0137/
TYP CHG/
TN 554 1135/
OE 01 1060/
EL NO/
RMK PER FIG 10/
END!

Call Trace (Calling Line Identification) (TRC)

5.109 When the trace feature is assigned to a telephone number, the Traffic Dial Administrator should be notified to have the trace recorded on Form ESS 3100.

5.110 When a call attempt is made to a telephone number which has the trace feature applied, a TTY message is printed, regardless of whether or not the call is completed. The call trace feature can be added for single party, 2-party, and multiparty lines.

Adding Call Trace

5.111 Example:

RC:TWOPTY/ (Notes 1 and 2)
ORD 0151/
TYP CHG/
TN 554 1135/
OE 01 2160/
TRC YES/ or TRC MN/ or TRC MJ/
PTY 2/
RMK PER FIG 13/
END!

Note 1: For party lines the party number is needed to identify the line.

Note 2: See flowchart (Fig. 13) for use of MN and MJ.

Removing Call Trace

5.112 Example:

RC:LINE/
ORD 0152/
TYP CHG/
TN 554 1111/
OE 00 3060/
TRC NO/
RMK PER FIG 10/
END!

Sleeve Lead (DP or DPU)

5.113 Sleeve leads are required to pass data from the ESS to remote equipment. Sleeve leads require cable facility assignments. Sleeve lead assignments (DP or DPU) must be obtained from the Traffic Dial Administrator, and they must be posted to the Exchange Customer Cable Records or Dedicated Plant Assignment Card in the same manner as other miscellaneous equipment.

Note: For a party line, the party number is needed to identify the line.

5.114 The keyword DPU assigns a distribute point triplet to provide the sleeve lead function for a noise immunity line circuit. The keyword DP assigns a distribute point for other line circuits.

Add or Change Sleeve Lead Function for Noise Immunity Line Circuit

5.115 Example:

```
RC:LINE/
ORD 9999/
TYP CHG/
TN 544 3052/
OE 12 1060/
DPU 01 255 3/
RMK PER FIG 10/
END!
```

Add or Change Sleeve Lead Function for Other Line Circuits

5.116 Example:

```
RC:LINE/
ORD 9998/
TYP CHG/
TN 554 3051/
OE 12 1061/
DP 01 255 2/
RMK PER FIG 10/
END!
```

Remove Sleeve Lead (DP or DPU)

5.117 Example:

```
RC:LINE/
ORD 0141/
TYP CHG/
TN 554 1135/
OE 01 1060/
DPU NO/
RMK PER FIG 10/
END!
```

Note: DPU indicates the distribute point triplet for noise immunity line circuit. Use DP for other lines.

Hardware Message Register (DPM)

5.118 The DPM keyword assigns the distribute point triplet (peripheral decoder) associated with the message register. A cable facility assignment is required to connect the peripheral decoder to the remote message register. The peripheral decoder must be posted in the assignment records (ECCR or DPAC). The peripheral decoder assignment is obtained from the Traffic Dial Administrator.

Note: Single party and 2-party lines can be equipped with hardware message registers. Multiparty lines, mobile radio lines, and coin lines are not permitted to be equipped with a message register.

Adding or Changing Hardware Message Register

5.119 Example:

```
RC:LINE/
ORD 0104/
TYP CHG/
TN 554 3051/
OE 01 2160/
DPM 01 255 3/
RMK PER FIG 10/
END!
```

Removing Hardware Message Register

5.120 Example:

```
RC:LINE/
ORD 3601/
TYP CHG/
TN 554 3051/
OE 01 2160/
DPM NO/
RMK PER FIG 10/
END!
```

Software Message Register (MR)

5.121 Single party and 2-party lines can be assigned software message registers. Multiparty lines are not permitted software message register assignments.

Add Software Message Register

5.122 Example:

RC:LINE/
ORD 0104/
TYP CHG/
TN 554 3052/
OE 01 2161/
MR 0101/
LCC 1FR/
RMK PER FIG 10/
END!

Remove Software Message Register

5.123 Example:

RC:LINE/
ORD 0105/
TYP CHG/
TN 554 3052/
OE 01 2161/
MR NO/
LCC 1FR/
RMK PER FIG 10/
END!

Ground Start (GST)

5.124 Service orders to add or remove ground start must be coordinated with central office personnel who will assure that necessary straps are added or removed for the line ferrod.

Changing Loop Start Line to Ground Start

5.125 Example:

RC:LINE/
ORD 0006/
TYP CHG/
TN 555 1212/
OE 01 0260/
IOE 01 2177/ (Note)
GST YES/
RMK PER FIG 10/
END!

Note: Only GST IOE can be used (Fig. 9).

Changing Ground Start Line to Loop Start:

5.126 Example:

RC:LINE/
ORD 1117/
TYP CHG/
TN 555 1212/
OE 01 2177/
IOE 01 0260/
GST NO/
RMK PER FIG 10/
END!

Wide Area Telephone Service (WATS)

5.127 If WATS has not been defined previously, a line class code, charge index table, a screening class, and appropriate screening table must be defined and entered into memory from the maintenance TTY. The RC:LCC, RC:SCR, and RC:CHI messages required cannot be input from the service order TTY.

5.128 If WATS has been defined, WATS can be added to an existing line at the service order TTY. For example:

RC:LINE/
ORD 0012/
TYP CHG/
TN 231 7846/
OE 03 1276/
LCC WAT/
WATS 086 2176/ (Note 1)
RTI 033/ (Note 2)
RMK PER FIG 10/
END!

Note 1: WATS billing number 086 2176.

0 = Designation for full time WATS. If WATS was to be measured, the numeral 1 would be used.

8 = Assigned by telephone company and used to represent the local state for identification purposes.

6 = Service area or band subscribed to.

2176 = Represents the special billing number which is obtained from the state WATS coordinating group.

Note 2: If the terminating major class of the line is 30, a route index must be assigned.

C. Disconnect Line

Disconnection of Active Line—TN to Machine Intercept (Unassigned Condition)

5.129 To completely remove a line from service, unassign both TN and OE.

RC:LINE/
ORD 0001/
TYP OUT/
TN 554 1135/
OE 01 1060/ (Note)
RMK PER FIG 11/
END!

Note: The TN and OE are now available for reassignment. Calls will be routed to machine intercept.

Disconnection of Active Line—TN to Operator Intercept

5.130 Two steps are required to remove an active line from service and route subsequent calls to operator intercept. The line must be removed to machine intercept by a type OUT order (paragraph 5.129) and then removed from machine intercept to operator intercept by a type NEW order (paragraph 5.131).

Removal of TN from Machine Intercept to Operator Intercept

5.131 Example:

RC:LINE/
ORD 0002/
TYP NEW/
TN 554 1135/
LCC ICP/
RTI 009/
RMK PER FIG 9/
END!

Removal TN From Operator to Machine Intercept

5.132 Example:

RC:LINE/
ORD 3062/
TYP OUT/
TN 554 1135/
RMK PER FIG 11/
END!

6. EXAMPLES OF SERIES COMPLETION MESSAGES

6.01 Series completion is a form of hunting which provides for calls to be routed to another telephone number if the called line is busy. Any telephone number assigned to the office may be used as the series completion number. Series completion must be added on separate ESS orders. The line must be entered in reverse order (last line first, etc). The various types of series completion assignments are as follows:

(a) New installation with series completion

(b) Adding a new installation to first line in an existing series completion group

(c) Adding a new installation to last line in an existing series completion group

(d) Adding an existing line to last line in an existing series completion group

(e) Adding an existing line to first line in an existing series completion group

(f) Exchanging first line in an existing series completion group with an existing line

(g) Exchanging last line in an existing completion group with an existing line

(h) Exchanging any line (except first line or last line) in an existing series completion group with an existing line

(i) Removing first line in an existing series completion group

(j) Removing last line in an existing series completion group

(k) Removing middle line in an existing series completion group.

A. New Installation With Series Completion

6.02 In the following example, three ESS orders are used to connect three new lines in series completion. The lines must be entered in reverse order (last line first).

- 554 8151—First line in series completion group
- 554 3485—Middle line in series completion group
- 554 3379—Last line in series completion group.

6.03 Use this format for the first order to install the line which will be the last line in the series completion group.

```
RC:LINE/
ORD 0106/
TYP NEW/
TN 554 3379/
OE 01 1160/
LCC 1FR/
END!
```

6.04 Use this format for the second order which is for the middle line in the series completion group.

```
RC:LINE/
ORD 0107/
TYP NEW/
TN 554 3485/
OE 00 2360/
LCC 1FR/
SER 554 3379/
END!
```

Note: SER telephone number is the same as TN number in first order.

6.05 Use this format for the third order which is for the first line in the series completion group.

```
RC:LINE/
ORD 0108/
TYP NEW/
TN 554 8151/
OE 01 1260/
LCC 1FR/
SER 554 3485/
END!
```

Note: SER telephone number is the same as TN number in second order.

Adding a New Installation to the First Line in an Existing Series Completion Group

6.06 In the following example, telephone number 554 8379 (a new line) is series completed to telephone number 554 8151 (the first line in the series completion group described in paragraph 6.02).

```
RC:LINE/
ORD 0109/
TYP NEW/
TN 554 8379/
OE 00 3460/
LCC 1FR/
SER 554 8151/
END!
```

Adding a New Installation to the Last Line in an Existing Series Completion Group

6.07 In the following example, telephone number 554 3379 (the last line in the series completion group described in paragraph 6.02) is series completed to telephone number 554 8784 (a new line).

6.08 Two ESS orders are needed. The first order is to install the new line 554 8784 and the second order is to change the last line 554 3379 so that the last line is series completed to the new 554 8784.

6.09 Use this format for the first order.

```
RC:LINE/
ORD 0110/
TYP NEW/
TN 554 8784/
OE 01 1360/
LCC 1FR/
END!
```

6.10 Use this format for the second order.

RC:LINE/
ORD 0111/
TYP CHG/
TN 554 3379/
OE 01 1160/
SER 554 8784/
END!

B. Change Lines in Series Completion Group

6.11 In the following example, three ESS orders are used to connect three lines in series completion. The lines must be entered in reverse order (last line first, etc).

- 554 8151—First line in series completion group
- 554 3485—Middle line in series completion group
- 554 3379—Last line in series completion group.

Adding an Existing Line to the Last Line in an Existing Series Completion Group

6.12 In the following example, telephone number 554 3379 (the last line in the series completion group described in paragraph 6.11) is series completed to telephone number 554 1111 (an existing line).

RC:LINE/
ORD 0112/
TYP CHG/
TN 554 3379/
OE 01 1360/
SER 554 1111/
END!

Adding an Existing Line to the First Line in an Existing Series Completion Group

6.13 In the following example, telephone number 554 1135 (an existing line) is series completed to telephone number 554 8151 (the first line in the series completion group described in paragraph 6.11).

RC:LINE/
ORD 0113/
TYP CHG/
TN 554 1135/
OE 01 1060/
SER 554 8151/
END!

Exchanging the First Line in an Existing Series Completion Group With an Existing Line

6.14 In the following example, telephone number 554 8151 (the first line in the series completion group described in paragraph 6.11) is exchanged with 554 1201 (an existing line). Two ESS orders are needed. The first order is to remove the first line 554 8151 from the series completion group, and the second order is to install the existing line 554 1201 in the series completion group.

6.15 Use this format for the first order.

RC:LINE/
ORD 0114/
TYP CHG/
TN 554 8151/
OE 01 1060/
SER NO/
END!

6.16 Use this format for the second order.

RC:LINE/
ORD 0115/
TYP CHG/
OE 00 2160/
TN 554 1201/
SER 554 3485/
END!

Exchanging the Last Line in an Existing Series Completion Group With an Existing Line

6.17 In the following example, telephone number 554 3379 (the last line in the series completion group described in paragraph 6.11) is exchanged with 554 3134 (an existing line).

Note: The change is made on line 554 3485 which series completes to last line 554 3379.

RC:LINE/
ORD 0117/
TYP CHG/
TN 554 3485/
OE 01 1360/
SER 554 3134/
END!

Exchanging Any Line (Except the First Line or the Last Line) in an Existing Series Completion Group With An Existing Line

6.18 In the following example, telephone number 554 3485 (the middle line in the series completion group covered in paragraph 6.11) is exchanged with 554 3051 (an existing line). Three ESS orders are needed. The first order is to remove the middle line 554 3485 from the series completion group; the second order is to install the existing line 554 3051 in the middle line position and to have the new middle line series completed to the last line 554 3379, and the third order is to have the first line 554 8151 series completed to the new middle line 554 3051.

6.19 Use this format for the first order.

```
RC:LINE/
ORD 0118/
TYP CHG/
TN 554 3485/
OE 00 2360/
SER NO/
END!
```

6.20 Use this format for the second order.

```
RC:LINE/
ORD 0119/
TYP CHG/
TN 554 3051/
OE 01 2160/
SER 554 3379/
END!
```

6.21 Use this format for the third order.

```
RC:LINE/
ORD 0120/
TYP CHG/
TN 554 8151/
OE 01 1260/
SER 554 3051/
END!
```

Removing the First Line in an Existing Series Completion Group

6.22 In the following example, telephone number 554 8151 (the first line in the series completion group described in paragraph 6.11) is removed from the group.

```
RC:LINE/
ORD 0122/
TYP CHG/
TN 554 8151/
OE 00 2160/
SER NO/
END!
```

Removing the Last Line in an Existing Series Completion Group

6.23 In the following example, telephone number 554 3379 (the last line in series completion group described in paragraph 6.11) is removed from the group.

> ***Note:*** The change is made to the middle line 554 3485 which series completes to the last line 554 3379.

```
RC:LINE/
ORD 0123/
TYP CHG/
TN 554 3485/
OE 01 1360/
SER NO/
END!
```

Removing the Middle Line in an Existing Series Completion Group

6.24 In the following example, telephone number 554 3485 (the middle line in series completion group described in paragraph 6.11) is removed from the group.

> ***Note:*** Removal of the middle line 554 3485 breaks the series completion chain. The series completion chain must be reestablished by series completing the first line 554 8151 to the last line 554 3379.

6.25 Two ESS orders are needed. The first order is to change the first line 554 8151 to series complete to the last line 554 3379, and the second order is to remove the middle line 554 3485 from the group.

6.26 Use this format for the first order.

```
RC:LINE/
ORD 0125/
TYP CHG/
TN 554 8151/
```

OE 01 1260/
SER 554 3379/
END!

6.27 Use this format for the second order.

RC:LINE/
ORD 0124/
TYP CHG/
TN 554 3458/
OE 01 2160/
SER NO/
END!

C. Disconnect Lines From Series Completion Group

6.28 Lines are disconnected from series completion groups by RC:LINE, TYP OUT messages (Fig. 10, Flowchart). One TYP OUT message is required for each line to be disconnected. TYP OUT unassigns the affected TN and OE numbers. Calls to an unassigned TN are routed to machine intercept. If routing to operator intercept is required, an additional message (RC:LINE, TYP NEW) is necessary.

6.29 The following series completion group is used to illustrate disconnects:

- TN 554 8151—First line in group
- TN 554 3485—Middle line
- TN 554 3378—Middle line
- TN 554 3379—Last line in group.

6.30 Lines must be disconnected in forward order. When more than one line is to be disconnected in a group, begin with the first affected TN in the group hunting sequence.

6.31 If disconnection of a line in a group interrupts the hunting sequence, the sequence must be restored.

DISCONNECTING ALL LINES IN SERIES COMPLETION GROUP

6.32 Lines must be disconnected in forward order. For example, to disconnect the group described in paragraph 6.29, begin with the first TN and continue in hunting order to the last TN.

6.33 To disconnect the first line, input:

RC:LINE/
ORD 0009/
TYP OUT/
TN 554 8151/
OE 01 0260/
END!

If routing to operator intercept is required, input:

RC:LINE/
ORD 0010/
TYP NEW/
TN 554 8151/
LCC ICP/
END!

6.34 To disconnect each of the remaining lines, repeat the messages shown in paragraph 6.33, using applicable TN and OE numbers.

Disconnecting Selected Lines in a Series Completion Group (Partial Disconnects)

6.35 Selected lines can be disconnected from a group without removing the entire group.

Disconnection of First Line

6.36 Refer to paragraph 6.33 for an example of disconnecting the first line in a group. Remaining lines are not affected.

Disconnection of Middle Line

6.37 Following is an example of procedures for disconnecting the middle line in the series completion group described in paragraph 6.29.

- Change hunting sequence.

RC:LINE/
ORD 0127/
TYP CHG/
TN 554 8151/
OE 01 0260/
SER 554 3378/
END!

- Disconnect TN 554 3485.

RC:LINE/
ORD 0126/

TYP OUT/
TN 554 3485/
OE 01 0261/
END!

- If required by service order, route TN 554 3485 to operator intercept.

RC:LINE/
ORD 0126/
TYP NEW/
TN 554 3485/
LCC ICP/
END!

Disconnection of Last Line

6.38 Following is an example of procedures for disconnecting the last line in the series completion group described in paragraph 6.29.

- Change hunting sequence.

RC:LINE/
ORD 0130/
TYP CHG/
TN 554 3378/
OE 01 0060/
SER NO/
END!

- Disconnect TN 554 3379.

RC:LINE/
ORD 0128/
TYP OUT/
TN 554 3379/
OE 01 0026/
END!

- If required by service order, route TN 554 3379 to operator intercept.

RC:LINE/
ORD 0129/
TYP NEW/
TN 554 3379/
LCC ICP/
END!

7. EXAMPLES OF MULTILINE HUNTING GROUP ASSIGNMENT MESSAGES

7.01 RC:MLHG messages are used to make multiline hunting group assignments. For assignment of terminals to hunting groups, see paragraph 8.

7.02 Keywords in the RC:MLHG message are listed and explained briefly in paragraph 2. Feature option keywords are explained in more detail in the Feature Glossary (paragraph 13).

7.03 Office records of multiline hunting group assignments are maintained on Forms ESS 3xxx-TG3 in accordance with Translation Guide TG3. Similar records are stored in ESS memory and may be obtained on Forms ESS 3xxx-R by typing OP:OFR messages (paragraph 12) at the Service Order TTY. Examples of available office records forms are:

ESS 3100-TG3 Telephone Number Table (Fig. 26)

ESS 3100-R Telephone Number Table (Fig. 27)

ESS 3105-TG3 Multiline Hunting Group Table (Fig. 28)

ESS 3105-R Multiline Hunting Group Table (Fig. 29)

ESS 3107-TG3 Supplementary Information Tables (Fig. 30 and 31)

ESS 3107-1R Supplementary Information Table (Fig. 32)

ESS 3107-2R Supplementary Information Table (Fig. 33)

ESS 3171-R Office Equipment Number (Fig. 34)

ESS 3306-TG3 Line Class Code Table (Fig. 2)

ESS 3306-R Line Class Code Table (Fig. 3).

7.04 Each RC:MLHG message is one of three types:

- TYP NEW is used to establish and make initial assignments for a hunting group
- TYP CHG is used to change, add, or remove hunting group assignments
- TYP OUT is used to remove an entire multiline hunting group.

A. New MLHG Group Assignments

7.05 Establishment of a multiline hunting group requires two steps. First, the group parameters must be established by an RC:MLHG, TYP NEW message. Second, terminals must be assigned to the group by RC:MTL, TYP NEW messages.

Establishing NEW MLHG

7.06 The flowchart (Fig. 21) illustrates all TYP NEW messages and keywords for the establishment of multiline hunting groups. As an example, the message to establish the MLHG described on Form ESS 3105-TG3 (Fig. 28) is:

```
RC:MLHG/
ORD 9901/
TYP NEW/
HML 03/
HSZ 07/
LCC TCG/
RAX 1/
BTN 481 6265/
NST 02/
EHT 05/
TTC YES/
CSL2 YES/
ESF YES/
RMK PER FIG 21/
END!
```

7.07 The message (paragraph 7.06) establishes multiline hunting group HML 03. The ***highest terminal number*** (10) has been previously assigned and is not required to be identified in the message.

7.08 The ***hunt size*** (HSZ) of the group is eight terminals (00 through 07). Terminals 08 through 10 are not huntable.

7.09 ***Line Class Code*** (TCG, Fig. 2) assigns two way service for all terminals; however, if necessary, an individual terminal can be assigned a different line class code by an RC:MTL message later (paragraph 8).

7.10 ***Bill to Number*** (BTN 481 6265) assigns the billing number for all terminals; however, if necessary, an individual terminal can be assigned a different BTN number by an RC:MTL message (paragraph 8) later.

7.11 ***Night Stop Terminal*** (NST 02) assigns terminal 02 as the night stop terminal. The NST terminal must be a hunted terminal.

7.12 ***Stop Hunt Terminal*** (EHT 05) assigns terminal 05 as the stop hunt terminal. The EHT terminal must be a hunted terminal.

7.13 ***TOUCH-TONE calling*** (TTC YES) and ***2-Digit Speed Calling*** (ESF YES) features are assigned to all terminals in the MLHG. The ***Customer Dialed Changes to 2-Digit Speed Calling List Feature*** (CSL2 YES) provides each terminal of the MLHG the capability to change its individual speed calling list. The TTC, ESF, and CSL2 keywords assign the applicable feature to all MLHG terminals.

7.14 The omission of ***Equipment and Feature Keywords*** (Fig. 28) from RC:MLHG, TYP NEW messages indicates that the omitted keywords are not applicable to all terminals; however, the omitted keywords can be used later in RC:MTL messages (paragraph 8) to assign features on an individual terminal basis.

Assignment of NEW Terminals to MLHG

7.15 Each NEW terminal assigned to an MLHG requires one RC:MTL, TYP NEW message. Data for terminal assignments is recorded on Form ESS 3105 (Fig. 28). Examples of terminal assignments are included in paragraph 8.

B. Change MLHG Group Assignments

7.16 The flowchart (Fig. 22) illustrates all TYP CHG messages and keywords. A TYP OUT message (paragraph 7.53) is used to remove an entire hunting group (Flowchart Fig. 23).

Change Line Class Code (LCC)

7.17 Example:

```
RC:MLHG/
ORD 0001/
TYP CHG/
HML 02/
LCC TCG/
END!
```

The LCC must be defined in the LCC table (Fig. 2). If the rate area is not 0, RAX n must be included in the message.

Change Rate Area (RAX)

7.18 To change the rate area of an MLHG, it is necessary to type in the new rate area on an MLHG change order to enable the program to assign the new screening class from the LCC table (Fig. 2) to this MLHG:

7.19 Example:

```
RC:MLHG/
ORD 0002/
TYP CHG/
HML 002/
LCC TCG/
RAX 1/
END!
```

Change Hunt Size (HSZ)

7.20 The number of hunted terminals allowed in an MLHG can be increased from its previous assignment to 08 by the message:

```
RC:MLHG/
ORD 0003/
TYP CHG/
HML 02/
HSZ 08/
END!
```

Additional hunted lines (within the limits established by HSZ) can be added to the MLHG by the RC:MTL message (paragraph 8).

Add or Change Night Stop Terminal (NST)

7.21 Example:

```
RC:MLHG/
ORD 9002/
TYP CHG/
HML 03/
NST 01/ (Note)
END!
```

Note: The NST terminal must be a hunted terminal.

Remove Night Stop Terminal (NST)

7.22 Example:

```
RC:MLHG/
ORD 9003/
TYP CHG/
HML 03/
NST NO/
END!
```

Add or Change Stop Hunt Terminal (EHT)

7.23 Example:

```
RC:MLHG/
ORD 9004/
TYP CHG/
HML 03/
EHT 08/ (Note)
END!
```

Note: The EHT terminal must be a hunted terminal.

Remove Stop Hunt Terminal (EHT)

7.24 Example:

```
RC:MLHG/
ORD 9004/
TYP CHG/
HML 03/
EHT NO/
END!
```

Add TOUCH-TONE Calling (TTC)

7.25 Assignment of the TTC feature to an MLHG assigns the feature to all MLHG terminals.

To assign the feature to selected terminals only, use the RC:MTL message (paragraph 8).

RC:MLHG/
ORD 8001/
TYP CHG/
HML 002/
TTC YES/
END!

If all MLHG terminals are not equipped with TTC, individual terminals may be assigned the feature by the RC:MTL message (paragraph 8).

Remove TOUCH-TONE Calling (TTC)

7.26 To remove TTC calling from an MLHG:

RC:MLHG/
ORD 0612/
TYP CHG/
HML 02/
TTC NO/
END!

Individual MLHG terminals can be assigned TTC feature by the RC:MTL message (paragraph 8).

Essential Line Feature (EL)

7.27 Assignment of the EL feature to an MLHG assigns the feature to all MLHG terminals. To assign the feature to selected terminals only, use the RC:MTL message (paragraph 8).

Add EL Feature to MLHG

7.28 Example:

RC:MLHG/
ORD 0617/
TYP CHG/
HML 002/
EL YES/
END!

Remove EL Feature From MLHG

7.29 Example:

RC:MLHG/
ORD 0618/
TYP CHG/
HML 002/
EL NO/
END!

Toll Diversion Assignment and Removal

7.30 An MLHG may be assigned the toll diversion feature by assigning a line class code (LCC) which provides the toll diversion feature. See Fig. 2 for example of LCC table. The feature may be removed by assignment of an LCC that does not provide the feature.

Bill to Number (BTN)

7.31 If all terminals do not require the same BTN, different BTN assignments can be made for each terminal using the RC:MTL message (paragraph 8).

Change BTN for MLHG

7.32 Example:

RC:MLHG/
ORD 0621/
TYP CHG/
HML 002/
BTN 555 3406/ (Note)
END!

Note: Use new BTN number.

Threeway Calling (ESC)

7.33 Assignment of the ESC feature to an MLHG assigns the feature to all MLHG terminals. To assign the feature to selected terminals only, use the RC:MTL message (paragraph 8).

Add ESC Feature to MLHG

7.34 Example:

RC:MLHG/
ORD 0627/
TYP CHG/
HML 002/
ESC YES/
END!

Remove ESC Feature From MLHG

7.35 Example:

```
RC:MLHG/
ORD 0628/
TYP CHG/
HML 02/
ESC NO/
END!
```

1-Digit Speed Calling (ESL)

7.36 Assignment of the ESL feature to an MLHG assigns the feature to all MLHG terminals. To assign the feature to selected terminals only, use the RC:MTL message (paragraph 8).

Add ESL Feature to MLHG

7.37 Example:

```
RC:MLHG/
ORD 0630/
TYP CHG/
HML 02/
ESL YES/
END!
```

Remove ESL Feature From MLHG

7.38 Example:

```
RC:MLHG/
ORD 0631/
TYP CHG/
HML 02/
ESL NO/
END!
```

Customer Dialed Changes to 1-Digit Speed Calling Lists (CSL1)

7.39 Assignment of the CSL1 feature to an MLHG assigns the feature to all MLHG terminals. The MLHG must also be assigned the ESL feature (paragraph 7.36).

Add CSL1 Feature to MLHG

7.40 Example:

```
RC:MLHG/
ORD 0633/
TYP CHG/
HML 002/
CSL1 YES/
END!
```

Remove CSL1 Feature From MLHG

7.41 Example:

```
RC:MLHG/
ORD 0634/
TYP CHG/
HML 002/
CSL1 NO/
END!
```

2-Digit Speed Calling (ESF)

7.42 Assignment of the ESF feature to an MLHG assigns the feature to all MLHG terminals. To assign the feature to selected terminals only, use the RC:MTL message (paragraph 8).

Add ESF Feature to MLHG

7.43 Example:

```
RC:MLHG/
ORD 0636/
TYP CHG/
HML 02/
ESF YES/
END!
```

Remove ESF Feature From MLHG

7.44 Example:

```
RC:MLHG/
ORD 0637/
TYP CHG/
HML 02/
ESF NO/
END!
```

Customer Dialed Changes to 2-Digit Speed Calling Lists (CSL2)

7.45 Assignment to the CSL2 feature to an MLHG assigns the feature to all MLHG terminals. The MLHG must also be assigned the ESF feature (paragraph 7.42).

Add CSL2 Feature to MLHG

7.46 Example:

RC:MLHG/
ORD 0639/
TYP CHG/
HML 002/
CSL2 YES/
END!

Remove CSL2 Feature From MLHG

7.47 Example:

RC:MLHG/
ORD 0640/
TYP CHG/
HML 002/
CSL2 NO/
END!

Ground Start (GST)

7.48 Assignment of the GST feature to an MLHG assigns the feature to all MLHG terminals. To assign the feature to selected terminals only, use the RC:MTL message (paragraph 8).

Add GST Feature to MLHG

7.49 Example:

RC:MLHG/
ORD 0642/
TYP CHG/
HML 02/
GST YES/
END!

Remove GST Feature From MLHG

7.50 Example:

RC:MLHG/
ORD 0643/
TYP CHG/
HML 02/
GST NO/
END!

C. Disconnect MLHG

7.51 Disconnect all MLHG terminals (RC:MTL, TYP OUT, paragraph 8) before disconnecting an MLHG.

7.52 After all terminals are disconnected, the MLHG can be disconnected by:

RC:MLHG/
ORD 0644/
TYP OUT/
HML 03/
END!

7.53 The flowchart for RC:MLHG, TYP OUT messages is Fig. 23.

8. EXAMPLES OF MULTILINE HUNTING GROUP TERMINAL MESSAGES

8.01 The RC:MTL messages are used to make terminal assignments to multiline hunting groups. For establishment of hunting groups, see paragraph 7.

8.02 Keywords in RC:MTL messages are listed and explained briefly in paragraph 2. Feature and equipment options are explained in more detail in the Feature Glossary (paragraph 13).

8.03 Office records of multiline hunting group assignments are maintained on Form ESS 3xxx-TG3 in accordance with Translation Guide TG3. Similar records are stored in ESS memory and may be obtained on Forms ESS 3xxx-R by typing OP:OFR messages (paragraph 12) at the Service Order TTY. Examples of available office records forms are:

ESS 3100-TG3 Telephone Number Table (Fig. 26)

ESS 3100-R Telephone Number Table (Fig. 27)

ESS 3105-TG3 Multiline Hunting Group Table (Fig. 28)

ESS 3105-R Multiline Hunting Group Table (Fig. 29)

ESS 3107-TG3 Supplementary Information Tables (Fig. 30 and 31)

ESS 3107-1R Supplementary Information Table (Fig. 32)

ESS 3107-2R Supplementary Information Table (Fig. 33)

ESS 3171-R Office Equipment Number (Fig. 34)

ESS 3306-TG3 Line Class Code Table (Fig. 2)

ESS 3306-R Line Class Code Table (Fig. 3).

8.04 Each RC:MTL message is one of three types:

- TYP NEW is used to add a new terminal to a multiline hunting group
- TYP CHG is used to change, add, or remove terminal assignments
- TYP OUT is used to remove a terminal completely from the multiline hunting group.

8.05 Multiline hunting group assignments are made by the RC:MLHG messages. Each terminal of the hunting group will have the same assignments as the group unless assigned otherwise by the RC:MTL message.

A. New Terminal Assignments to MLHG

8.06 The flowchart (Fig. 18) illustrates all RC:MTL, TYP NEW messages and keywords. As examples, the following messages assign new terminals to the MLHG assigned in paragraph 7.06.

```
RC:MTL/
ORD 0706/
TYP NEW/
LCC TCK/
TN 481 6200/
OE 04 0142/
HML 03/
TER 00/
LHT 06/
ESC YES/
RMK PER FIG 18/
END!
```

8.07 The message (paragraph 8.06) assigns telephone number (TN 481 6200), office equipment number (OE 04 0142) to multiline hunting group 03 (HML 03). The message also assigns incoming service only (LCC TCK, Fig. 2) and threeway calling (ESC) for terminal 00 (TER 00).

8.08 Though not included in the RC:MTL message (paragraph 8.06), assignments for terminal 00 (TER 00) include TOUCH-TONE calling (TTC), speed calling 2-digit service (ESF), and customer dialed changes to 2-digit speed calling lists (CHF). These features were assigned by the RC:MLHG, HML 03 message for all terminals of the hunting group.

8.09 The Last Hunt Terminal (LHT) is 06. Incoming calls to TN 481 6200 will hunt to terminal 06. If LHT is not included in the message, no hunting will take place.

8.10 One RC:MTL, TYP NEW message is required for each terminal added to an MLHG.

B. Change MLHG Terminal Assignments

8.11 The RC:MTL, TYP CHG message is used to add or change assignments for an individual MLHG terminal. The flowchart (Fig. 19) illustrates all RC:MTL, TYP CHG messages and keywords.

Change Telephone Number (TN)

8.12 Example:

```
RC:MTL/
ORD 9902/
TYP CHG/
TN 481 6201/
OE 00 1203/
HML 03/
TER 01/
NTN 481 6209/
RMK PER FIG 19/
END!
```

Change Office Equipment Number (OE)

8.13 Example:

```
RC:MTL/
ORD 9903/
TYP CHG/
TN 481 6209/
OE 00 1203/
HML 03/
TER 01/
```

IOE 01 1204/
END!

Changing Line Class Code

8.14 A terminal may be assigned a line class code different from that assigned to the MLHG.

RC:MTL/
ORD 9904/
TYP CHG/
HML 03/
TER 00/
OE 04 0142/
TN 481 6200/
LCC TCK/
RMK PER FIG 19/
END!

8.15 If more than one rate area is defined within the office, it is required to also input a line indicating the rate area in which the MLHG is assigned:

RAX 1/

Add or Change Bill to Number for MLHG Terminal (BTN)

8.16 To assign or change a bill to number (different from the billing number for the MLHG) to an MLHG terminal:

RC:MTL/
ORD 9905/
TYP CHG/
HML 03/
TER 00/
OE 04 0142/
TN 481 6200/
BTN 481 6210/ (Note)
END!

Note: The BTN must be an office code defined in the office.

Remove Special Billing

8.17 To remove the special billing number from an MLHG terminal so that it is billed like other regular terminals in the MLHG, the BTN that is inputted must be the same as the BTN for the MLHG as a whole.

RC:MTL/
ORD 9022/
TYP CHG/
HML 001/
TER 006/
OE 01 0233/
TN 555 1438/
BTN NO/
END!

Add or Change Hardware Message Register (MSG) Assignment

8.18 Hardware message register assignments may be made to individual terminals of an MLHG. To assign a message register to a terminal, a spare peripheral decoder point, which is assigned to a message register, must be selected from Form ESS 3575-R (CPD and PD Assignment Record normally maintained by Traffic).

RC:MTL/
ORD 9906/
TYP CHG/
HML 03/
TER 00/
OE 00 1203/
TN 481 6201/
DPM 0 137 1/
END!

Remove Hardware Message Register

8.19 To remove a message register from an existing line, the message register (DPM) input line is typed NO in the data field.

8.20 Example:

RC:MTL/
ORD 9021/
TYP CHG/
HML 002/
TER 006/
OE 01 0233/
TN 555 1438/
DPM NO/
END!

Add or Change Software Message Register Assignment (MR)

8.21 The record of software message assignments is maintained by the telephone company.

The keyword is MR nnnn; nnnn is a four digit index associating the terminal and a software message register.

Add Software Message Register

8.22 Example:

```
RC:MTL/
ORD 9907/
TYP CHG/
HML 03/
TER 01/
MR 1203/
END!
```

Remove Software Message Register

8.23 Example:

```
RC:MTL/
ORD 9908/
TYP CHG/
HML 03/
TER 01/
MR NO/
END!
```

Add or Change Sleeve Lead Assignment

8.24 Sleeve lead assignments may be made to individual terminals of an MLHG. A spare peripheral decoder point must be obtained (normally from the Traffic Dial Administrator) to assign a sleeve lead to a terminal. Normally traffic maintains a record of peripheral decoder points on Form ESS 3575-R (CPD and PD Assignment Record).

```
RC:MTL/
ORD 9907/
TYP CHG/
HML 02/
TER 06/
OE 01 0233/
TN 555 1438/
DP 0 137 2/
END!
```

Remove Sleeve Lead

8.25 To remove a sleeve lead from an existing line, DP input line is typed with NO in the data field:

```
RC:MTL/
ORD 9022/
TYP CHG/
HML 002/
TER 006/
OE 01 0233/
TN 555 1438/
DP NO/
END!
```

Ground Start (GST) Assignment

8.26 Ground start assignments in an MLHG can be made on an individual terminal basis. To designate a terminal as ground start:

```
RC:MTL/
ORD 9908/
TYP CHG/
HML 02/
TER 03/
OE 01 0212/
IOE 01 0117/
TN 555 1438/
GST YES/ (Note)
END!
```

Note: The service order must be coordinated with work in the office to restrap the line ferrod for ground start.

Change Terminal to Loop Start

8.27 To change a terminal to loop start:

```
RC:MTL/
ORD 9909/
TYP CHG/
HML 02/
TER 04/
OE 01 1137/
IOE 01 1001/
TN 555 1438/
GST NO/
END!
```

The service order must be coordinated with work in the office to restrap the line ferrod for loop start.

Add Call Forwarding (ESM) for MLHG Terminal

8.28 Individual terminals within an MLHG may be assigned the call forwarding feature. To assign the call forwarding feature:

RC:MTL/
ORD 9910/
TYP CHG/
HML 002/
TER 06/
OE 01 0233/
TN 555 1438/
ESM YES/
END!

Remove Call Forwarding (ESM)

8.29 To remove the call forwarding feature:

RC:MTL/
ORD 9023/
TYP CHG/
HML 002/
TER 006/
OE 01 0233/
TN 555 1438/
ESM NO/
END!

Add Call Trace (Terminating Call Identification) (TRC) Assignment

8.30 All calls to a telephone number (TN) assigned to an MLHG hunt group terminal will be identified as they occur.

RC:MTL/
ORD 9911/
TYP CHG/
HML 002/
TN 555 1212/
OE 01 0233/
TER 06/
TRC YES/ or TRC MN/ or TRC MJ/
END!

8.31 When the trace feature is assigned to a telephone number, the Traffic Dial Administrator should be notified to have the trace recorded on Forms ESS 3100-R and ESS 3105-R for that number and MLHG.

Remove Call Trace From a Member TN

8.32 To remove the call trace feature from an MLHG terminal telephone number:

RC:MTL/
ORD 9024/
TYP CHG/
HML 002/
TN 555 1212/
OE 01 0233/
TER 006/
TRC NO/
END!

C. Disconnect MLHG Terminal

Disconnection of Terminal—TN to Machine Intercept (Unassigned Condition)

8.33 To completely disconnect a terminal from service, unassign both TN and OE.

RC:MTL/
ORD 0001/
TYP OUT/
HML 002/
TER 006/
TN 554 1135/
OE 01 1060/ (Note)
RMK PER FIG 20/
END!

Note: The TN and OE are now available for reassignment. Calls will be routed to machine intercept.

Disconnection of Terminal—TN to Operator Intercept

8.34 Two steps are required to remove an active terminal from service and route subsequent calls to operator intercept. The terminal must be removed to machine intercept by a TYP OUT order (paragraph 8.33) and then removed from machine interrupt to operator intercept by an RC:LINE TYP NEW order (paragraph 8.35).

Removal of TN From Machine Intercept to Operator Intercept

8.35 Example:

```
RC:LINE/
ORD 0002/
TYP NEW/
TN 554 1135/
LCC ICP/
RTI 009/
RMK PER FIG 9/
END!
```

Removal of TN From Operator to Machine Intercept

8.36 Example:

```
RC:LINE/
ORD 3062/
TYP OUT/
TN 554 1135/
RMK PER FIG 11/
END!
```

9. VERIFICATION OF ASSIGNMENTS

9.01 Verification of recent change assignments can be accomplished by using verification (VER) messages (Table B) or by obtaining printouts from office records. Verification messages provide printouts of assignments made by recent change (RC) messages. Office records printouts can be obtained by OP:OFR messages. Paragraph 12 describes OP:OFR messages.

9.02 Normally VER messages are used to verify line assignments.

VERIFICATION OF SINGLE PARTY OR COIN LINE

9.03 To verify a line when the telephone number (TN) is known, type the message:

```
VER:LINE:TN nxx xxxx!
```

9.04 To verify a line when the office equipment (OE) number is known, type the message:

```
VER:LINE:OE gg cswi!
```

9.05 The resulting TTY printout will list the latest line data assigned by the RC:LINE message. See RC:LINE flowchart (Fig. 9).

VERIFICATION OF 2-PARTY LINE

9.06 To verify a 2-party line when the telephone number (TN) is known, type the message:

```
VER:TWOPTY:TN nxx xxxx!
```

9.07 To verify a 2-party line when the office equipment number (OE) is known, type the message:

```
VER:TWOPTY/
OE gg cwsi/
PTY p/
END!
```

9.08 The resulting TTY printout will list the latest data assigned the line by the RC:TWOPTY message. See RC:TWOPTY flowchart (Fig. 12).

VERIFICATION OF MULTIPARTY LINE

9.09 To verify a multiparty line when the telephone number (TN) is known, type the message:

```
VER:MPTY:TN nxx xxxx!
```

9.10 To verify a multiparty line when the office equipment number (OE) and party number (PTY) is known, type the message:

```
VER:MPTY/
OE gg cwsi/
PTY n/
END!
```

9.11 To verify a multiparty line when only the office equipment number (OE) is known, type the message:

```
VER:MPTY:OE gg cwsi!
```

9.12 The resulting TTY printout will list the latest data assigned the line by the RC:MPTY message. See RC:MPTY flowchart (Fig. 15).

VERIFICATION OF MULTILINE HUNTING GROUP

9.13 The OP:OFR message is used to print out office records for multiline hunting groups (Form ESS 3105-R, Fig. 29).

9.14 To verify MLHG group data and data for all group terminals:

OP:OFR/
GRP nn/
TER ALL/ (Note)
END!

Note: The header always prints when TER ALL or GRP ALL is specified.

9.15 To verify MLHG data and data for a particular group terminal:

OP:OFR/
GRP nn/
TER nnn/
HDR YES/ (Note)
END!

Note: Include HDR YES/ if form headings are required.

VERIFICATION OF MULTILINE HUNTING GROUP TERMINAL

9.16 To verify an MLHG terminal when the telephone number (TN) is known, type the message:

VER:MTL:TN nxx xxxx!

9.17 To verify an MLHG terminal when the office equipment number (OE) is known, type the message:

VER:MTL:OE gg cwsi!

9.18 The resulting printout will list the requested data. See RC:MTL flowchart (Fig. 18).

VERIFICATION OF CALL FORWARDING NUMBER

9.19 To verify a customer call forwarding number (CFN) when the telephone number (TN) is known, type the message:

VER:CFN:TN nxx xxxx!

VERIFICATION OF CUSTOMER SPEED CALLING NUMBERS

9.20 To verify a customer speed calling numbers (SCN) when the telephone number (TN) is known, type the message:

VER:SCN:TN nxx xxxx!

VERIFICATION OF SOFTWARE MESSAGE REGISTER CONTENTS

9.21 To verify the contents of a software message register when the message register index is known, type the message:

VER:MRI xxxx! (Note)

Note: xxxx equals the message register index.

9.22 The message register index assigned a working line can be obtained by a line verification message (paragraph 9.03 through 9.18).

10. TELEPHONE COMPANY CHANGES TO CUSTOMER SPEED CALLING LISTS

10.01 The RC:LINE, RC:MLHG, or RC:MTL messages may be used to assign the 1-digit (ESL) and 2-digit (ESF) speed calling features. A line may be assigned either one or both of the features. Two-party and multiparty lines cannot be arranged for speed calling.

10.02 The flowchart (Fig. 25) illustrates the RC:SCN messages and keywords used for telephone company changes to speed calling lists.

10.03 For example:

RC:SCN/
ORD 6782/
TN 555 6108/
ADN 02/
DGS 555 5302/
OE 01 1060/
END!

The message provides TN 555 6108 the capability of dialing 02 for calls to TN 555 5302.

11. TELEPHONE COMPANY CHANGES TO CUSTOMER CALL FORWARDING NUMBERS

11.01 The RC:LINE or RC:MTL messages may be used to assign the call forwarding (ESM) feature. Two-party and multiparty lines cannot be arranged for call forwarding.

11.02 The flowchart (Fig. 24) illustrates the RC:CFN messages and keywords used for telephone company changes to customer call forwarding numbers.

11.03 For example:

```
RC:CFN/
TN 555 6108/
CFN 555 5302/
END!
```

Calls to TN 555 6108 will be forwarded to TN 555 5302.

12. OFFICE RECORDS

FORMS

12.01 Office records are maintained manually on Forms ESS 3xxx-TG3 in accordance with Translation Guide TG3. Similar records are stored in ESS memory and can be obtained on Forms ESS 3xxx-R by typing OP:OFR messages at the Service Order TTY.

12.02 Selected Forms ESS 3xxx-R provide space for REMARKS. Remarks can be added, changed, or removed by either OP:OFR messages or recent change (RC) messages.

12.03 Table C lists office records forms that can be printed at the Service Order TTY. Section 233-101-115 and IM-3H300-03 describe office records and the OP:OFR message completely. This section provides selected examples.

OFFICE RECORDS PRINTOUTS

12.04 Each form provides a maximum of 20 printed lines. When more than 20 lines are required, the form is continued on succeeding sheets.

12.05 Form headings are automatically printed on each sheet if a printout consists of 20 or more lines.

12.06 For less than 20 lines, headings are not automatic; however a heading can be provided by inclusion of the keyword, HDR YES, in the OP:OFR message.

Printout All Office Records Forms

12.07 A print out of all office records forms (Table C) requires several hours. Schedules should be considered before typing:

```
OP:OFR/
FORM ALL/
END!
```

Telephone Number Table Printouts

12.08 Information on the Telephone Number Table Form ESS 3100-R (Fig. 27) is supplemented by information on Forms ESS 3107-1R (Fig. 32) and 3107-2R (Fig. 33). Normally, when an OP:OFR message requests printing of Form 3100-R, the supplementary information is also printed. If the supplementary information is not required, include the keyword EXTRA NO/ in the message.

12.09 To print out a complete Telephone Number Table Form 3100-R with supplementary information from Forms 3107-1R and 3107-2R, type:

```
OP:OFR/
FORM 3100/
END!
```

or

```
OP:OFR/
TN ALL/
END!
```

12.10 To print out a complete Telephone Number Table Form 3100-R without supplementary information, type:

```
OP:OFR/
FORM 3100/
EXTRA NO/
END!
```

12.11 To print out several consecutive lines from Telephone Number Table Form 3100-R and supplementary information from Forms 3107-1R and 3107-2R, identify the first telephone number and indicate the number of lines to be printed. For example:

```
OP:OFR/ (Note)
TN 678 4521/
NUM 6/
HDR YES/ (optional)
END!
```

Note: If supplementary information is not required, include the keyword EXTRA NO/ in the message. If no supplementary information is listed on Forms 3107-1R or 3107-2R, EXTRA NO/ is not necessary.

12.12 As an example, to print out office records for one telephone number from Form 3100-R, type:

```
OP:OFR/ (Note)
TN 678 4521/
HDR YES/ (paragraph 12.06)
END!
```

Note: If supplementary information from Forms 3107-1R and 3107-2R is not required, include the keyword EXTRA NO/ in the message. If no supplementary information is listed on Forms 3107-1R or 3107-2R, EXTRA NO/ is not necessary.

Multiline Hunting Group Table Printouts

12.13 A Multiline Hunting Group (MLHG) Table Form ESS 3105-R (Fig. 29) is provided for each multiline hunting group (00-63). The form includes both group and member number information.

12.14 To print out all MLHG tables including both group and member information, type:

```
OP:OFR/
FORM 3105/
END!
```

12.15 As an example, to print out one MLHG table including one group and all member information, type:

```
OP:OFR/ (Note)
GRP 11/
TER ALL/
END!
```

Note: The form header always prints for messages that include TER ALL.

12.16 As an example, to print out information for an MLHG and one member of the group, type:

```
OP:OFR/
GRP 59/
TER 04/
HDR YES/ (optional)
END!
```

Office Equipment Number Table Printouts

12.17 An example of Office Equipment (OE) Number Table Form ESS 3171-R is illustrated on Fig. 34.

12.18 To print out the complete OE number table, type:

```
OP:OFR/
FORM 3171/
END!
```

or

```
OP:OFR/
OE ALL/
END!
```

12.19 As an example, to print out several consecutive lines from OE number table, type:

```
OP:OFR/ (Note)
OE 010230/
NUM 22/
END!
```

Note: This message prints 22 lines from Form 3171, beginning with OE 010230. Since more than 19 lines will be printed, the printout will include form headings.

12.20 As an example, to print out one line from OE number table, type:

```
OP:OFR/
OE 010230/
HDR YES/  (Note)
END!
```

Note: Include HDR YES/ in the message only if the form heading is desired on the print out.

13. FEATURE GLOSSARY

BLN Bill Listed Number—This feature, also called special toll billing, permits customer billing of each outward toll call to the telephone number originating the call.

BSY Busy Tone Feature—Either BSY YES/ or BSY NO/ is used. BSY YES/ causes busy tone to be returned when all mobile radio channels are busy. BSY NO/ causes reorder to be returned when all mobile radio channels are busy.

BTN Bill to Number—Used when a customer requests service be billed to a telephone number other than listed telephone number.

CSL1 Customer Dialed Changes to a 1-Digit Speed Calling List—Customer line must be assigned ESL feature. See CSL 2.

CSL2 Customer Dialed Changes to a 2-Digit Speed Calling List—The speed calling change feature allows a customer to directly dial changes into the speed calling lists. The range of the 1-digit code is 2 through 9. The range of the 2-digit code is 20 through 49. The customer may have the ability to alter both 1-digit speed calling lists and 2-digit speed calling lists. The customer line must be assigned the ESF feature.

ESC Threeway Calling—A station can add another party to an existing incoming exchange network, to establish a 3-party conference. This can be done without attendant assistance, by flashing the switchhook after utilizing the consultation hold feature. This feature is not allowed on manual, coin, or any party line.

ESF Speed Calling 2-Digit—
ESL Speed Calling 1-Digit—These features allow the customer to assign abbreviated codes (1-digit or 2-digit) to certain called numbers. This permits the dialing of selected numbers using fewer digits than normally required. These features are available to both rotary dial and TOUCH-TONE customers, and may be assigned simultaneously to a customer. See CSL1 and CSL2 for changes to speed calling lists by the customer.

ESM Call Forwarding—When call forwarding feature is activated, calls intended for the customers line are automatically routed to another telephone number within the central office free calling area.

ESX Call Waiting—A customer with the call waiting feature will be notified with a tone if an additional call is directed to his number while he is engaged in a call. The feature also allows the customer to hold the existing connection to answer the new call. If the customer takes no action, the tone is repeated once 10 seconds later.

SER Series Completion—The series completion feature is a form of hunting which allows calls to be routed to another telephone number if the called line is busy. Any telephone number assigned to the central office may be used as the series completion number. Series completion lines are added on separate ESS service orders. The series telephone number must be entered in reverse order, last line first.

TRC Call Trace (Calling Line Identification)—This feature allows identification of calls that are currently in progress on a 1-shot basis, of calls to a given line in a central office area of calls for a given number outside the central office area. A record is always printed at the maintenance TTY for each traced call. On an optional basis, a minor or major alarm will sound at the Central Office.

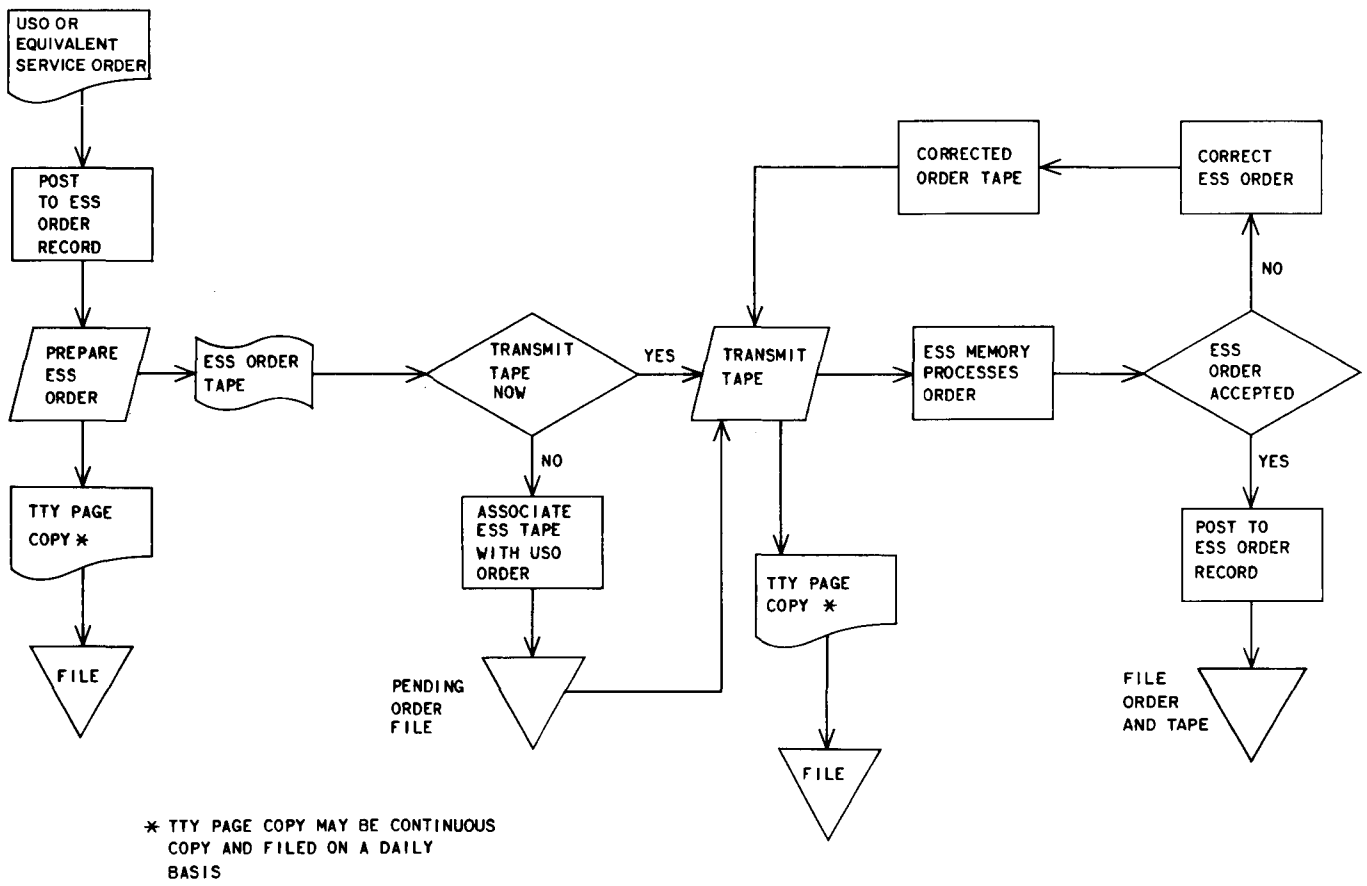

Fig. 1—Flowchart for Preparing and Processing ESS Service Order and Tape

DATE ____-____-____ (1 2 3 4 5)

LINE CLASS CODE TABLE
NO. 3 ESS

ESS 3306-2(01) TG-3

PAGE 2 OF 2

BASE & CONTROL 3Q40BO (6 11)

LCI 1ST DIGIT 0 (17)

FORM CODE 40 (14 15)

ESS UNIT ____

LCI 2ND & 3RD DIGIT	LINE CLASS CODE	PARTY NUMBER	RATE AREA	MAJOR CLASS ORIG.	MAJOR CLASS TERM	SCREENING CLASS	REMARKS	REVISE
18 19	20 22	23	24	25 26	27 28	29 30	64	79 80
50	TCG		0	08	08	04	MLH 2 Way	
51	TCK		0	30	08	04	MLH INC ONLY	
52	TCM		0	08	30	04	MLH OUT ONLY	
53	TCG		1	08	08	04	MLH 2 WAY	
54	TCK		1	30	08	04	MLH INC ONLY	
55	TCM		1	08	30	04	MLH OUT ONLY	
56							RESERVED FOR MLH	
57								
58								
59								
60							RESERVED FOR MLH	
61	1FR		0	08	08	00	1 PTY RES	
62	1FB		0	08	08	01	1 PTY BUS	
63	2FR	1	0	04	04	02	2 PTY RING	
64	2FR	2	0	05	05	02	2PTY TIP	
65	1PC		0	25	25	03	COIN DTF	
66	4FR	1	0	16	16	06	4 PTY FLAT RATE	
67	4FR	2	0	16	17	06		
68	4FR	3	0	16	18	06		
69	4FR	3	0	16	19	06	4PTY FLAT RATE	
70	8FR	1	0	16	16	06	8PTY FLAT RATE	
71	8FR	2	0	16	17	06		
72	8FR	3	0	16	18	06		
73	8FR	4	0	16	19	06		
74	8FR	5	0	16	20	06		
75	8FR	6	0	16	21	06		
76	8FR	7	0	16	22	06		
77	8FR	8	0	16	23	06	8PTY FLAT RATE	
78	MAN		0	10	08	00	MANUAL	
79	ICP		0	00	28	00	INTERCEPT	
80	ATC		0	29	29	05	AUTO CONNECT	
81	SPL		0	00	31	05	SPECIAL ROUTING	
82	D01		0	30	08	00	DENY ORIG. FR	
83	D02	1	0	30	04	02	DENY ORIG. 2 PTY RING	
84	D02	2	0	30	05	02	DENY ORIG. 2 PTY TIP	
85	DT1		0	08	30	00	DENY TERM. FR	
86	DT2	1	0	04	30	02	DENY TERM. 2 PTY RING	
87	DT2	2	0	05	30	02	DENY TERM 2 PTY TIP	
88	1FA		1	08	08	07	1 PTY RES	
89	1FB		1	08	08	08	1 PTY BUS	
90	2FR	1	1	04	04	09	2 PTY RING	
91	2FR	2	1	05	05	09	2 PTY TIP	
92	1PC		1	25	25	10		
93	4FR	1	1					

DO NOT USE DATA LISTED ON THIS FORM. USE LATEST APPLICABLE OFFICE DATA.

Fig. 2—Example of Line Class Code Table—Form ESS 3306-TG3

```
ESS 3306-R                          NO. 3 ESS                          LCI xxx

BASE & CONTROL: xxxxxx                  LINE CLASS CODE
OFFICE: xxxxxxxxxxxx              DATE mm/dd/yy  hh:mm:ss
-------------------------------------------------------------------------------
   !    ! ! !MAJOR!S !                    !
   !    ! ! !CLASS!C !                    !
   !    ! ! !-----!RC!    REMARKS         ! MS
   !    ! ! !O !T !NL!     (14)           !CNTS
 L ! L !P!R!R !E !IA!                     !
 C ! C !T!A!I !R !NS!                     !
 I ! C !Y!X!G !M !GS!                     !
---+---+-+-+--+--+--+-------------------+----
```

LCI - Line Class Index
LCC - Line Class Code
PTY - Party Number
RAX - Rate Area
MAJOR CLASS
    ORIG - Originating Major Class
    TERM - Terminating Major Class
SCRNING CLASS - Screening Class
MS CNTS - Main Station Counts

Fig. 3—Example of Line Class Code Table—Form ESS 3306-R

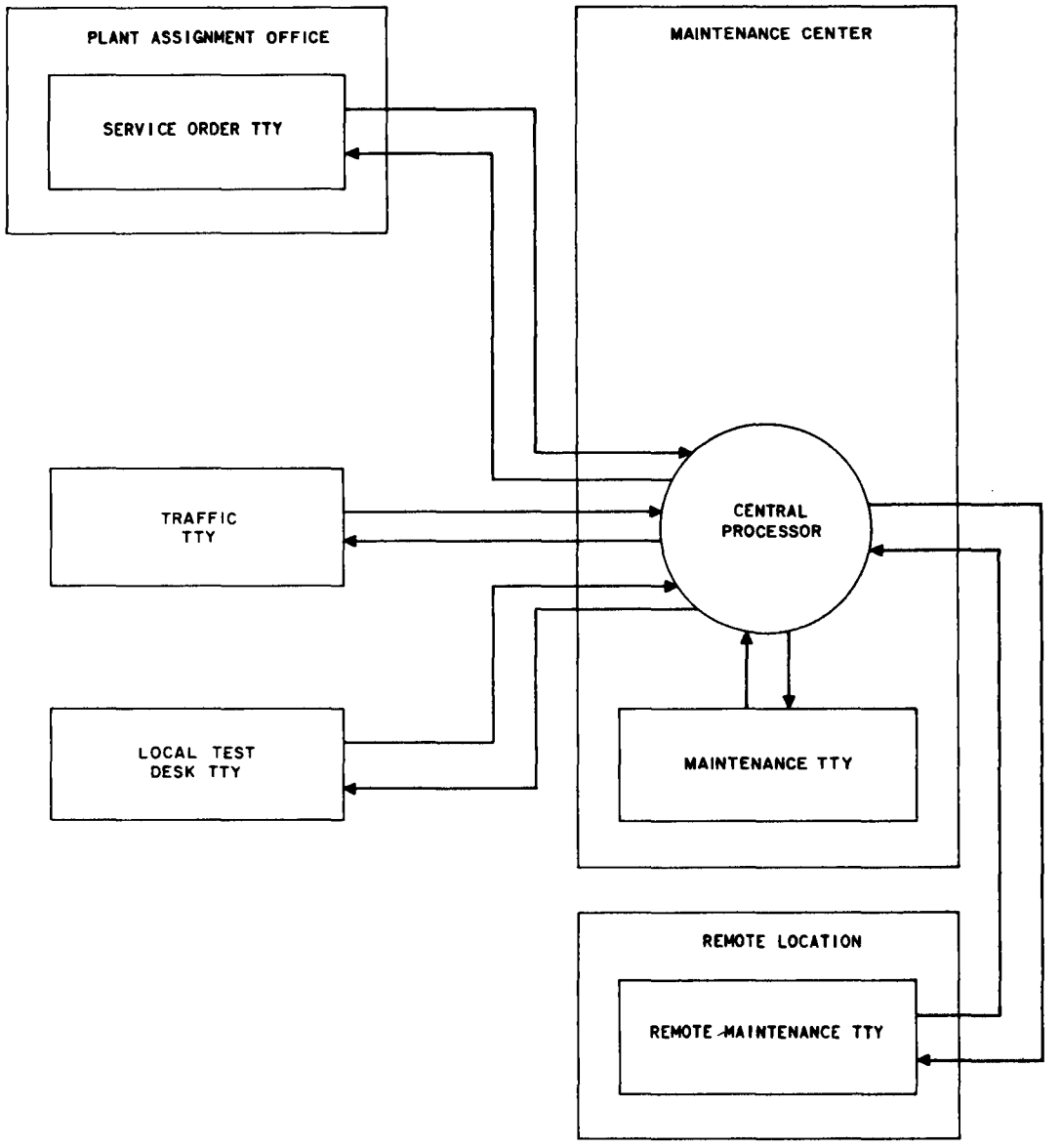

Fig. 4—Teletypewriter Arrangements

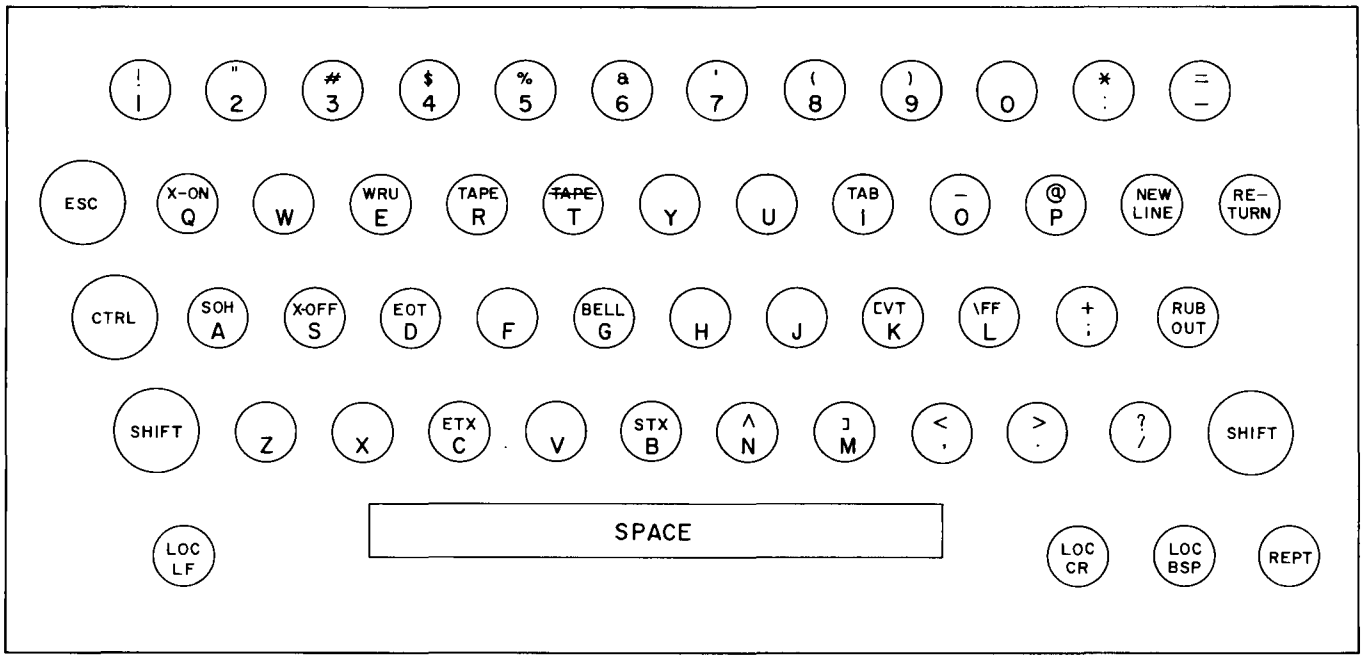

Fig. 5—Teletypewriter Keyboard

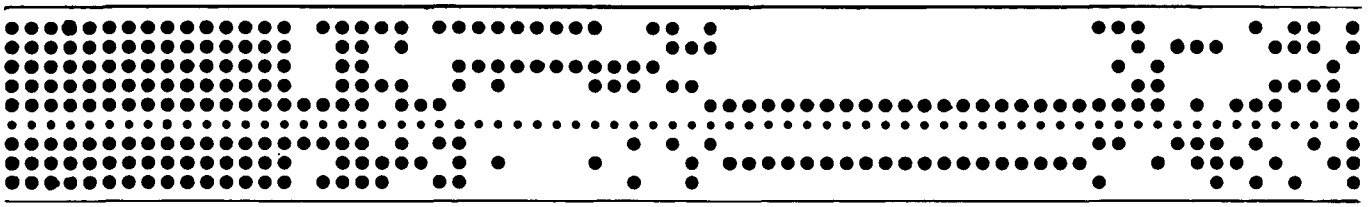

Fig. 6—Perforated Tape Used With Service Order Teletypewriter

THOUSANDS_____

HUNDREDS_____

ESS ORDER LOG

ESS ORDER NO.	DATE USED	USED BY	SERVICE ORDER NO.	DUE DATE	ACTIVATED DATE	ACTIVATED BY	REMARKS
00							
01							
02							
03							
04							
05							
06							
07							
08							
09							
10							
11							
12							
13							
14							
15							
16							
17							
18							
19							
20							
21							
22							
23							
24							
25							
26							
27							
28							
29							
30							
31							
32							
33							
34							
35							
36							
37							
38							
39							
40							
41							
42							
43							
44							
45							
46							
47							
48							
49							

Fig. 7—ESS Order Log

A. NOTES

1. The option symbol ◯ indicates that succeeding keywords on the flowchart are optional. Their use depends on the type and purpose of the message.

2. The "exclusive or" symbol ⊗ indicates that only one of the succeeding keywords may be used. For example, either BTN or BLN may be used, but not both. Since the ⊗ symbol is preceded by an ◯ symbol, a BTN or BLN entry is used only when required by the service order.

3. The "and" symbol ● indicates that all the succeeding keywords must be used. For example, SP and BSY must be used together; if one is used, the other must be used also. Since the ● symbol is preceded by an ◯ symbol, SP and BSY are used only when required by the service order.

4. The "nonexclusive or" symbol ⊕ indicates that one or more of the succeeding keywords may be used. For example, either or both ESM and SER keywords may be used. Since the symbol is preceded by an ◯ symbol, no entry is required unless required by the service order.

5. The execute symbol "!" indicates the end of the message. Normally the last line of the message is END!.

B. DEFINITIONS OF KEYWORDS

KEYWORD	DEFINITION
BLN	SPECIAL TOLL BILLING
BSY	BUSY OR REORDER
BTN	BILL TO NUMBER
ESM	CALL FORWARDING
LCC	LINE CLASS CODE
OE	OFFICE EQUIPMENT NUMBER GG = CONCENTRATOR GROUP (01 THROUGH 15) C = CONCENTRATOR (0 OR 1) W = SWITCH GROUP (0 THROUGH 2) S = SWITCH (0 THROUGH 7) I = INPUT LEVEL (0 THROUGH 7)
RAX	RATE AREA
RTI	DIRECT ROUTE INDEX
SER	SERIES COMPLETION DIRECTORY NUMBER
SP	SCAN POINT NUMBER SS = SCANNER NUMBER (00 THROUGH 15) RR = ROW NUMBER (00 THROUGH 31) PP = POINT IN ROW (00 THROUGH 15)
TN	TELEPHONE NUMBER
TYP	TYPE OF SERVICE ORDER

C. FLOW CHART EXAMPLE

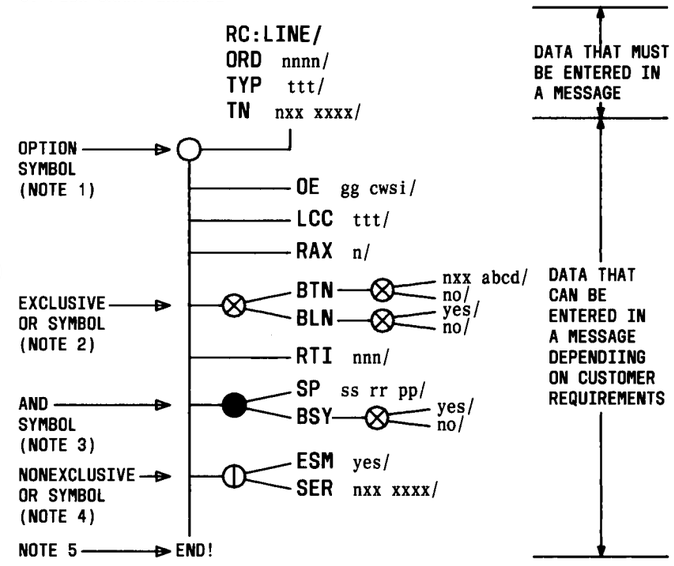

Fig. 8—Example of Flowchart

A. NOTES

1. OE is always required except for TNs on intercept or special routing. For ground start lines, use level 6 on switch 1, 2, 5, or 6; or use level 7 on any switch. For GST assignments, the service or circuit order must be coordinated with Central Office personnel to assure that the line ferrod is strapped for ground start service.

2. RAX is used with keyword LCC to determine the classes of service. If RAX is not used, the rate area is assumed to be 0.

3. For GST lines, select office equipment (OE) numbers described in Note 1.

4. RTI is used when the terminating major class is intercept, special routing, or denied service. If RTI is not specified and the major terminating class is intercept, the default value RTI 8 is assigned.

5. SP should be specified for:
   Individual lines requiring the remote make busy feature.
   Mobile radio lines.
   1A concentrator lines.
   Group alerting lines.
   Subscriber loop multiplexor lines.

6. DPCN is required for dial tone first coin lines. DPCN is used for coin first lines at the option of the telephone company.

7. An RMK keyword can be used to add remarks to the Telephone number Table Form ESS 3100-R. A remark may be either "general" or "predefined". A general remark can have a maximum of 13 alphanumeric characters, arranged optionally. A predefined remark selected from the following will be automatically dated.

REMARK	MEANING
BC	Business Change
BD	Business Disconnect
DLL	Dial Long Lines
DNA	Do Not Assign
ICP	Intercept
MAN	Manual Line
NP	Nonpublished
PC	Public Coin
PLA	Plant Assignment
RC	Resident Change

REMARK	MEANING
RD	Resident Disconnect
RSV	Reserve
SPC	Semipublic Coin
VAC	Vacant

8. When a call is being traced, the MN or MJ keyword provides for a minor or major alarm at the central office.

B. DEFINITIONS OF KEYWORDS

KEYWORD	DEFINITION
BLN	SPECIAL TOLL BILLING
BSY	BUSY OR REORDER
BTN	BILL TO NUMBER
DP	DISTRIBUTOR TRIPLET FOR SLEEVE LEAD FUNCTION. P = PERIPHERAL PULSE DISTRIBUTOR (0 OR 1) DDD = PERIPHERAL DECODER (000 THROUGH 255) T = TRIPLET (0 THROUGH 3)
DPCN	DISTRIBUTOR POINT FOR COIN LINE CIRCUIT P = PERIPHERAL PULSE DISTRIBUTOR (0 OR 1) DDD = PERIPHERAL DECODER (000 THROUGH 255) T = TRIPLET (0 THROUGH 3) O = POINT (0 THROUGH 2)
DPM	DISTRIBUTOR TRIPLET FOR MESSAGE REGISTERS. VALUES P DDD T ARE THE SAME AS FOR DP
DPU	DISTRIBUTOR TRIPLET FOR NOISE IMMUNITY LINE CIRCUIT. VALUES OF P DDD T SAME AS DP
EL	ESSENTIAL LINE CLASS A
ESC	THREEWAY CALLING
ESF	SPEED CALL, 2-DIGIT SERVICE
ESL	SPEED CALL, 1-DIGIT SERVICE
ESM	CALL FORWARDING
ESX	CALL WAITING SERVICE
GST	GROUND START
HLN	HOT LINE NUMBER
LCC	LINE CLASS CODE
MR	MESSAGE REGISTER
OE	OFFICE EQUIPMENT NUMBER GG = CONCENTRATOR GROUP (01 THROUGH 15) C = CONCENTRATOR (0 OR 1) W = SWITCH GROUP (0 THROUGH 2) S = SWITCH (0 THROUGH 7) I = INPUT LEVEL (0 THROUGH 7)
ORD	ORDER NUMBER
PLIT	PROHIBIT LINE INSULATION TEST
RAX	RATE AREA
RMK	REMARKS
ROH	RECEIVER OFF-HOOK TONE
RTI	DIRECT ROUTE INDEX
SER	SERIES COMPLETION DIRECTORY NUMBER
SOB	SERVICE OBSERVING FEATURE
SP	SCAN POINT NUMBER SS = SCANNER NUMBER (00 THROUGH 15) RR = ROW NUMBER (00 THROUGH 31) PP = POINT IN ROW (00 THROUGH 15)
SS	SPECIAL STUDIES
TN	TELEPHONE NUMBER
TRC	TRACE
TTC	TOUCH-TONE CALLING
TYP	TYPE OF SERVICE ORDER
WATS	WATS SERVICE

C. RC:LINE NEW FLOWCHART

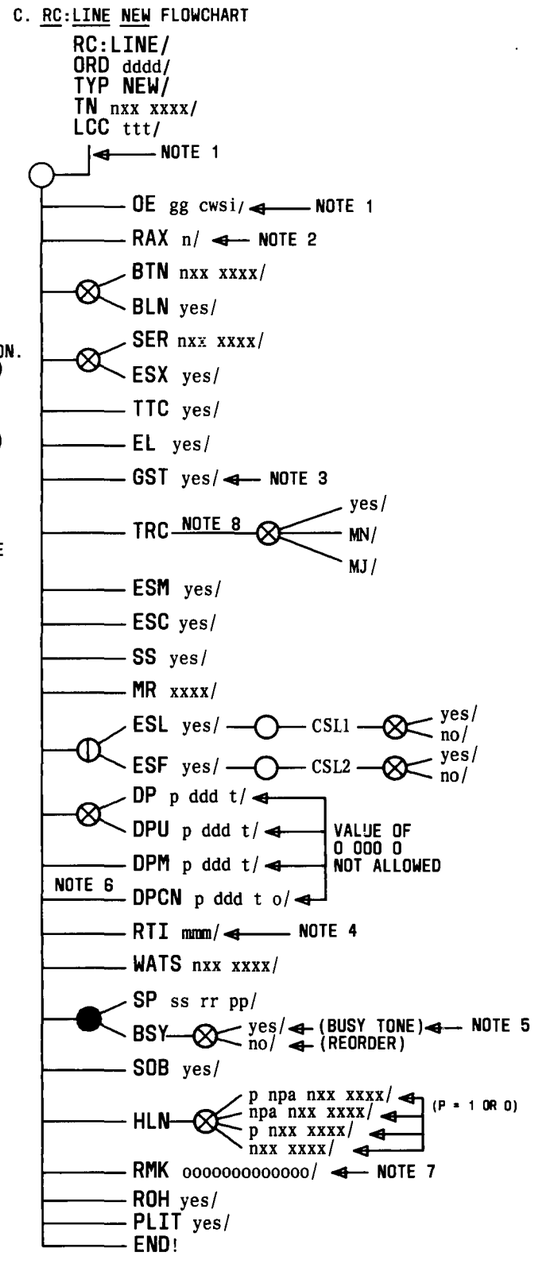

Fig. 9—RC:LINE, TYP NEW Message Flowchart

A. NOTES

1. OE is always required except for TNs on intercept or special routing. For ground start lines, use level 6 on switch 1, 2, 5, or 6; or use level 7 on any switch. For GST assignments, the service or circuit order must be coordinated with Central Office personnel to assure that the line ferrod is strapped for ground start service.
2. RAX is used with keyword LCC to determine the classes of service. If RAX is not used, the rate area is assumed to be 0.
3. For GST lines, select office equipment (OE) numbers described in Note 1.
4. RTI is used when the terminating major class is intercept, special routing, or denied service. If RTI is not specified and the major terminating class is intercept, the default value RTI 8 is assigned.
5. SP should be specified for:
   Individual lines requiring the remote make busy feature.
   Mobile radio lines.
   1A concentrator lines.
   Group alerting lines.
   Subscriber loop multiplexor lines.
6. DPCN is required for dial tone first coin lines. DPCN is used for coin first lines at the option of the telephone company.
7. An RMK keyword can be used to add remarks to the Telephone number Table Form ESS 3100-R. A remark may be either "general" or "predefined". A general remark can have a maximum of 13 alphanumeric characters, arranged optionally. A predefined remark selected from the following will be automatically dated.

REMARK	MEANING
BC	Business Change
BD	Business Disconnect
DLL	Dial Long Lines
DNA	Do Not Assign
ICP	Intercept
MAN	Manual Line
NP	Nonpublished
PC	Public Coin
PLA	Plant Assignment
RC	Resident Change
RD	Resident Disconnect
RSV	Reserve
SPC	Semipublic Coin
VAC	Vacant

8. When a call is being traced, the MN or MJ keyword provides for a minor or a major alarm at the central office.

B. DEFINITIONS OF KEYWORDS

KEYWORD	DEFINITION
BLN	SPECIAL TOLL BILLING
BSY	BUSY OR REORDER
BTN	BILL TO NUMBER
DP	DISTRIBUTOR TRIPLET FOR SLEEVE LEAD FUNCTION. P = PERIPHERAL PULSE DISTRIBUTOR (0 OR 1) DDD = PERIPHERAL DECODER (000 THROUGH 255) T = TRIPLET (0 THROUGH 3)
DPCN	DISTRIBUTOR POINT FOR COIN LINE CIRCUIT P = PERIPHERAL PULSE DISTRIBUTOR (0 OR 1) DDD = PERIPHERAL DECODER (000 THROUGH 255) T = TRIPLET (0 THROUGH 3) O = POINT (0 THROUGH 2)
DPM	DISTRIBUTOR TRIPLET FOR MESSAGE REGISTERS. VALUES P DDD T ARE THE SAME AS FOR DP
DPU	DISTRIBUTOR TRIPLET FOR NOISE IMMUNITY LINE CIRCUIT. VALUES OF P DDD T SAME AS DP
EL	ESSENTIAL LINE CLASS A
ESC	THREEWAY CALLING
ESF	SPEED CALL, 2-DIGIT SERVICE
ESL	SPEED CALL, 1-DIGIT SERVICE
ESM	CALL FORWARDING
ESX	CALL WAITING SERVICE
GST	GROUND START
HLN	HOT LINE NUMBER
IOE	NEW OFFICE EQUIPMENT NUMBER
LCC	LINE CLASS CODE
MR	MESSAGE REGISTER
NTN	NEW TELEPHONE NUMBER
OE	OFFICE EQUIPMENT NUMBER GG = CONCENTRATOR GROUP (01 THROUGH 15) C = CONCENTRATOR (0 OR 1) W = SWITCH GROUP (0 THROUGH 2) S = SWITCH (0 THROUGH 7) I = INPUT LEVEL (0 THROUGH 7)
ORD	ORDER NUMBER
PLIT	PROHIBIT LINE INSULATION TEST
RAX	RATE AREA
RMK	REMARKS
RTI	DIRECT ROUTE INDEX
ROH	RECEIVER OFF-HOOK TONE
SER	SERIES COMPLETION DIRECTORY NUMBER
SOB	SERVICE OBSERVING FEATURE
SP	SCAN POINT NUMBER SS = SCANNER NUMBER (00 THROUGH 15) RR = ROW NUMBER (00 THROUGH 31) PP = POINT IN ROW (00 THROUGH 15)
SS	SPECIAL STUDIES
TN	TELEPHONE NUMBER
TRC	TRACE
TTC	TOUCH-TONE CALLING
TYP	TYPE OF SERVICE ORDER
WATS	WATS SERVICE

C. RC:LINE CHANGES FLOWCHART

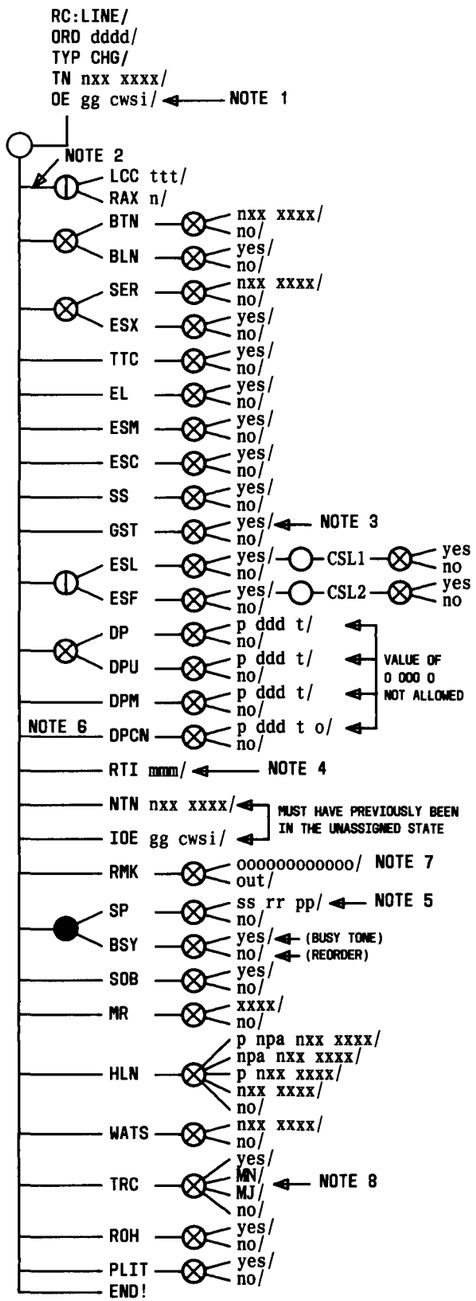

Fig. 10—RC:LINE, TYP CHG Message Flowchart

A. NOTES

1. An RMK keyword can be used to add remarks to the Telephone number Table Form ESS 3100-R. A remark may be either "general" or "predefined". A general remark can have a maximum of 13 alphanumeric characters, arranged optionally. A predefined remark selected from the following will be automatically dated.

REMARK	MEANING
BC	Business Change
BD	Business Disconnect
DLL	Dial Long Lines
DNA	Do Not Assign
ICP	Intercept
MAN	Manual Line
NP	Nonpublished
PC	Public Coin
PLA	Plant Assignment
RC	Resident Change
RD	Resident Disconnect
RSV	Reserve
SPC	Semipublic Coin
VAC	Vacant

If the RMK keywork is not included in the TYP OUT message, the remark, VAC, will be printed on Form ESS 3100-R and dated.

B. RC:LINE OUT FLOWCHART

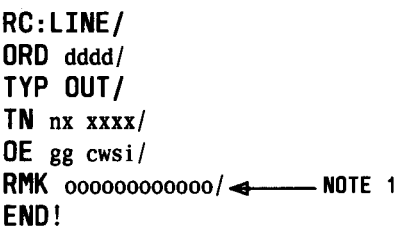

Fig. 11—RC:LINE, TYP OUT Message Flowchart

A. NOTES

1. OE is always required. For TNs on intercept or special routing, use RC:LINE, TYP NEW message.

2. RAX is used with keyword LCC to determine the classes of service. If RAX is not used, the rate area is assumed to be 0.

3. RTI is used when the terminating major class is intercept, special routing, or denied service. If RTI is not specified and the major terminating class is intercept, the default value RTI 8 is assigned.

4. SP should be specified for:
   Individual lines requiring the remote make busy feature.
   Mobile radio lines.
   1A concentrator lines.
   Group alerting lines.
   Subscriber loop multiplexor lines.

5. An RMK keyword can be used to add remarks to the Telephone number Table Form ESS 3100-R. A remark may be either "general" or "predefined". A general remark can have a maximum of 13 alphanumeric characters, arranged optionally. A predefined remark selected from the following will be automatically dated.

REMARK	MEANING
BC	Business Change
BD	Business Disconnect
DLL	Dial Long Lines
DNA	Do Not Assign
ICP	Intercept
MAN	Manual Line
NP	Nonpublished
PC	Public Coin
PLA	Plant Assignment
RC	Resident Change
RD	Resident Disconnect
RSV	Reserve
SPC	Semipublic Coin
VAC	Vacant

6. When a call is being traced, the MN or MJ keyword provides for a minor or a major alarm at the central office.

B. DEFINITIONS OF KEYWORDS

KEYWORD	DEFINITION
BSY	BUSY OR REORDER
DP	DISTRIBUTOR TRIPLET FOR SLEEVE LEAD FUNCTION. P = PERIPHERAL PULSE DISTRIBUTOR (0 OR 1) DDD = PERIPHERAL DECODER (000 THROUGH 255) T = TRIPLET (0 THROUGH 3)
DPM	DISTRIBUTOR TRIPLET FOR MESSAGE REGISTERS. VALUES P DDD T ARE THE SAME AS FOR DP
DPU	DISTRIBUTOR TRIPLET FOR NOISE IMMUNITY LINE CIRCUIT. VALUES OF P DDD T SAME AS DP
EL	ESSENTIAL LINE CLASS A
LCC	LINE CLASS CODE
MR	MESSAGE REGISTER
OE	OFFICE EQUIPMENT NUMBER GG = CONCENTRATOR GROUP (01 THROUGH 15) C = CONCENTRATOR (0 OR 1) W = SWITCH GROUP (0 THROUGH 2) S = SWITCH (0 THROUGH 7) I = INPUT LEVEL (0 THROUGH 7)
ORD	ORDER NUMBER
PLIT	PROHIBIT LINE INSULATION TEST
PTY	PARTY
RAX	RATE AREA
RMK	REMARKS
ROH	RECEIVER OFF-HOOK TONE
RTI	DIRECT ROUTE INDEX
SOB	SERVICE OBSERVING FEATURE
SP	SCAN POINT NUMBER SS = SCANNER NUMBER (00 THROUGH 15) RR = ROW NUMBER (00 THROUGH 31) PP = POINT IN ROW (00 THROUGH 15)
SS	SPECIAL STUDIES
TN	TELEPHONE NUMBER
TRC	TRACE
TTC	TOUCH-TONE CALLING
TYP	TYPE OF SERVICE ORDER

C. RC:TWOPTY NEW FLOWCHART

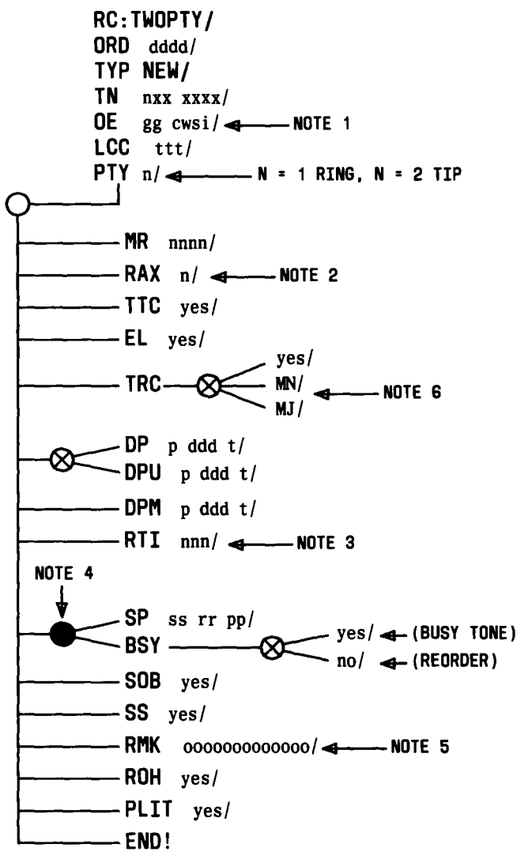

Fig. 12—RC:TWOPTY, TYP NEW Message Flowchart

A. NOTES

1. OE is always required. For TNs on intercept or special routing, use RC:LINE,TYP NEW message.

2. RAX is used with keyword LCC to determine the classes of service. If RAX is not used, the rate area is assumed to be 0.

3. RTI is used when the terminating major class is intercept, special routing, or denied service. If RTI is not specified and the major terminating class is intercept, the default value RTI 8 is assigned.

4. SP should be specified for:
   Individual lines requiring the remote make busy feature.
   Mobile radio lines.
   1A concentrator lines.
   Group alerting lines.
   Subscriber loop multiplexor lines.

5. NTN must have previously been in the unassigned state. Old TN will automatically go unassigned.

6. An RMK keyword can be used to add remarks to the Telephone number Table Form ESS 3100-R. A remark may be either "general" or "predefined". A general remark can have a maximum of 13 alphanumeric characters, arranged optionally. A predefined remark selected from the following will be automatically dated.

REMARK	MEANING
BC	Business Change
BD	Business Disconnect
DLL	Dial Long Lines
DNA	Do Not Assign
ICP	Intercept
MAN	Manual Line
NP	Nonpublished
PC	Public Coin
PLA	Plant Assignment
RC	Resident Change
RD	Resident Disconnect
RSV	Reserve
SPC	Semipublic Coin
VAC	Vacant

7. When a call is being traced, the MN or MJ keyword provides for a minor or major alarm at the central office.

B. DEFINITIONS OF KEYWORDS

KEYWORD	DEFINITION
BSY	BUSY OR REORDER
DP	DISTRIBUTOR TRIPLET FOR SLEEVE LEAD FUNCTION. P = PERIPHERAL PULSE DISTRIBUTOR (0 OR 1) DDD = PERIPHERAL DECODER (000 THROUGH 255) T = TRIPLET (0 THROUGH 3)
DPM	DISTRIBUTOR TRIPLET FOR MESSAGE REGISTERS. VALUES P DDD T ARE THE SAME AS FOR DP
DPU	DISTRIBUTOR TRIPLET FOR NOISE IMMUNITY LINE CIRCUIT. VALUES OF P DDD T SAME AS DP
EL	ESSENTIAL LINE CLASS A
LCC	LINE CLASS CODE
MR	MESSAGE REGISTER
NTN	NEW TELEPHONE NUMBER
OE	OFFICE EQUIPMENT NUMBER GG = CONCENTRATOR GROUP (01 THROUGH 15) C = CONCENTRATOR (0 OR 1) W = SWITCH GROUP (0 THROUGH 2) S = SWITCH (0 THROUGH 7) I = INPUT LEVEL (0 THROUGH 7)
ORD	ORDER NUMBER
PLIT	PROHIBIT LINE INSULATION TEST
PTY	PARTY
RAX	RATE AREA
RMK	REMARKS
ROH	RECEIVER OFF-HOOK TONE
RTI	DIRECT ROUTE INDEX
SOB	SERVICE OBSERVING FEATURE
SP	SCAN POINT NUMBER SS = SCANNER NUMBER (00 THROUGH 15) RR = ROW NUMBER (00 THROUGH 31) PP = POINT IN ROW (00 THROUGH 15)
SS	SPECIAL STUDIES
TN	TELEPHONE NUMBER
TRC	TRACE
TTC	TOUCH-TONE CALLING
TYP	TYPE OF SERVICE ORDER

C. RC:TWOPTY CHG FLOWCHART:

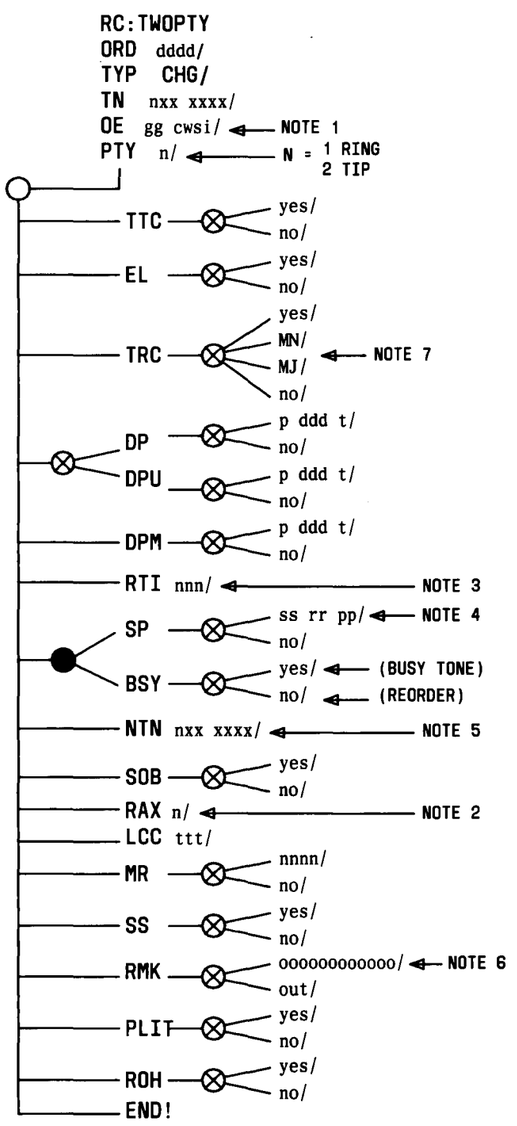

Fig. 13—RC:TWOPTY, TYP CHG Message Flowchart

A. NOTES

1. An RMK keyword can be used to add remarks to the Telephone number Table Form ESS 3100-R. A remark may be either "general" or "predefined". A general remark can have a maximum of 13 alphanumeric characters, arranged optionally. A predefined remark selected from the following will be automatically dated.

REMARK	MEANING
BC	Business Change
BD	Business Disconnect
DLL	Dial Long Lines
DNA	Do Not Assign
ICP	Intercept
MAN	Manual Line
NP	Nonpublished
PC	Public Coin
PLA	Plant Assignment
RC	Resident Change
RD	Resident Disconnect
RSV	Reserve
SPC	Semipublic Coin
VAC	Vacant

If the RMK keywork is not included in the TYP OUT message, the remark, VAC, will be printed on Form ESS 3100-R and dated.

B. RC:TWOPTY OUT FLOWCHART

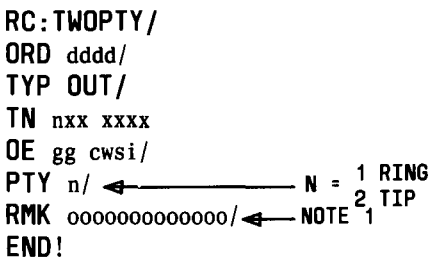

Fig. 14—RC:TWOPTY, TYP OUT Message Flowchart

A. NOTES

1. OE is always required, For TNs on intercept or special routing, use RC:LINE,TYP NEW message.

2. RAX is used with keyword LCC to determine the classes of service. If RAX is not used, the rate area is assumed to be 0.

3. RTI is used when the terminating major class is intercept, special routing, or denied service. If RTI is not specified and the major terminating class is intercept, the default value RTI 8 is assigned.

4. SP should be specified for:
   Individual lines requiring the remote make busy feature.
   Mobile radio lines.
   1A concentrator lines.
   Group alerting lines.
   Subscriber loop multiplexor lines.

5. An RMK keyword can be used to add remarks to the Telephone number Table Form ESS 3100-R. A remark may be either "general" or "predefined". A general remark can have a maximum of 13 alphanumeric characters, arranged optionally. A predefined remark selected from the following will be automatically dated.

REMARK	MEANING
BC	Business Change
BD	Business Disconnect
DLL	Dial Long Lines
DNA	Do Not Assign
ICP	Intercept
MAN	Manual Line
NP	Nonpublished
PC	Public Coin
PLA	Plant Assignment
RC	Resident Change
RD	Resident Disconnect
RSV	Reserve
SPC	Semipublic Coin
VAC	Vacant

6. If TTC YES is entered, the TTC feature is provided for all parties.

7. When a call is being traced, the MN or MJ keyword provides for a minor or a major alarm at the central office.

B. DEFINITIONS OF KEYWORDS

KEYWORD	DEFINITION
BSY	BUSY OR REORDER
DP	DISTRIBUTOR TRIPLET FOR SLEEVE LEAD FUNCTION. P = PERIPHERAL PULSE DISTRIBUTOR (0 OR 1) DDD = PERIPHERAL DECODER (000 THROUGH 255) T = TRIPLET (0 THROUGH 3)
DPU	DISTRIBUTOR TRIPLET FOR NOISE IMMUNITY LINE CIRCUIT. VALUES OF P DDD T SAME AS DP
EL	ESSENTIAL LINE CLASS A
LCC	LINE CLASS CODE
OE	OFFICE EQUIPMENT NUMBER GG = CONCENTRATOR GROUP (01 THROUGH 15) C = CONCENTRATOR (0 OR 1) W = SWITCH GROUP (0 THROUGH 2) S = SWITCH (0 THROUGH 7) I = INPUT LEVEL (0 THROUGH 7)
ORD	ORDER NUMBER
PLIT	PROHIBIT LINE INSULATION TEST
PTY	PARTY
RAX	RATE AREA
RMK	REMARKS
ROH	RECEIVER OFF-HOOK TONE
RTI	DIRECT ROUTE INDEX
SOB	SERVICE OBSERVING FEATURE
SP	SCAN POINT NUMBER SS = SCANNER NUMBER (00 THROUGH 15) RR = ROW NUMBER (00 THROUGH 31) PP = POINT IN ROW (00 THROUGH 15)
SS	SPECIAL STUDIES
TN	TELEPHONE NUMBER
TRC	TRACE
TTC	TOUCH-TONE CALLING
TYP	TYPE OF SERVICE ORDER

C. RC:MPTY NEW FLOWCHART

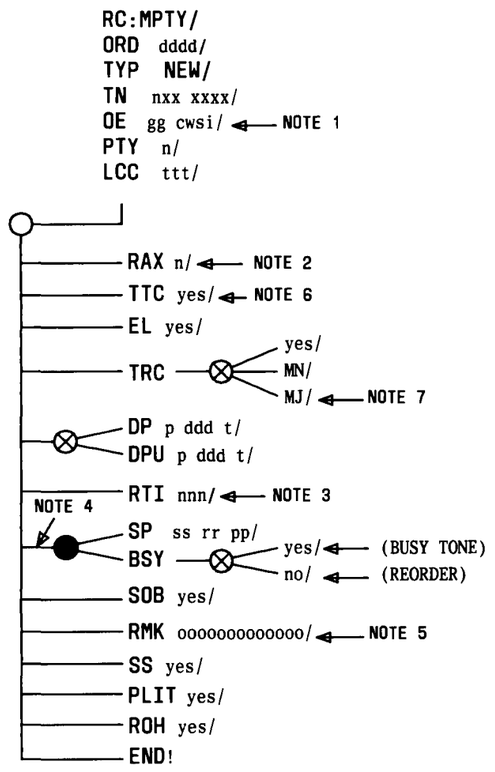

Fig. 15—RC:MPTY, TYP NEW Message Flowchart

A. NOTES

1. OE is always required. For TNs on intercept or special routing, use RC:LINE,TYP NEW message.

2. RAX is used with keyword LCC to determine the classes of service. If RAX is not used, the rate area is assumed to be 0.

3. RTI is used when the terminating major class is intercept, special routing, or denied service. If RTI is not specified and the major terminating class is intercept, the default value RTI 8 is assigned.

4. SP should be specified for:
   Individual lines requiring the remote make busy feature.
   Mobile radio lines.
   1A concentrator lines.
   Group alerting lines.
   Subscriber loop multiplexor lines.

5. NTN must have previously been in the unassigned state. Old TN will automatically go unassigned.

6. An RMK keyword can be used to add remarks to the Telephone number Table Form ESS 3100-R. A remark may be either "general" or "predefined". A general remark can have a maximum of 13 alphanumeric characters, arranged optionally. A predefined remark selected from the following will be automatically dated.

REMARK	MEANING
BC	Business Change
BD	Business Disconnect
DLL	Dial Long Lines
DNA	Do Not Assign
ICP	Intercept
MAN	Manual Line
NP	Nonpublished
PC	Public Coin
PLA	Plant Assignment
RC	Resident Change
RD	Resident Disconnect
RSV	Reserve
SPC	Semipublic Coin
VAC	Vacant

7. If TTC NO/ is entered for one party on a MPTY line, the TTC feature is removed for all all parties. If TTC YES/ is entered, the TTC feature is provided for all parties.

8. When a call is being traced, the MN or MJ keyword provides for a minor or a major alarm at the central office.

B. DEFINITIONS OF KEYWORDS

KEYWORD	DEFINITION
BSY	BUSY OR REORDER
DP	DISTRIBUTOR TRIPLET FOR SLEEVE LEAD FUNCTION. P = PERIPHERAL PULSE DISTRIBUTOR (0 OR 1) DDD = PERIPHERAL DECODER (000 THROUGH 255) T = TRIPLET (0 THROUGH 3)
DPU	DISTRIBUTOR TRIPLET FOR NOISE IMMUNITY LINE CIRCUIT. VALUES OF DDD T SAME AS DP
EL	ESSENTIAL LINE CLASS A
LCC	LINE CLASS CODE
OE	OFFICE EQUIPMENT NUMBER GG = CONCENTRATOR GROUP (01 THROUGH 15) C = CONCENTRATOR (0 OR 1) W = SWITCH GROUP (0 THROUGH 2) S = SWITCH (0 THROUGH 7) I = INPUT LEVEL (0 THROUGH 7)
ORD	ORDER NUMBER
PTY	PARTY
RAX	RATE AREA
RMK	REMARKS
RTI	DIRECT ROUTE INDEX
SOB	SERVICE OBSERVING FEATURE
SP	SCAN POINT NUMBER SS = SCANNER NUMBER (00 THROUGH 15) RR = ROW NUMBER (00 THROUGH 31) PP = POINT IN ROW (00 THROUGH 15)
SS	SPECIAL STUDIES
TN	TELEPHONE NUMBER
TRC	TRACE
TTC	TOUCH-TONE CALLING
TYP	TYPE OF SERVICE ORDER

C. RC:MPTY CHANGES FLOWCHART

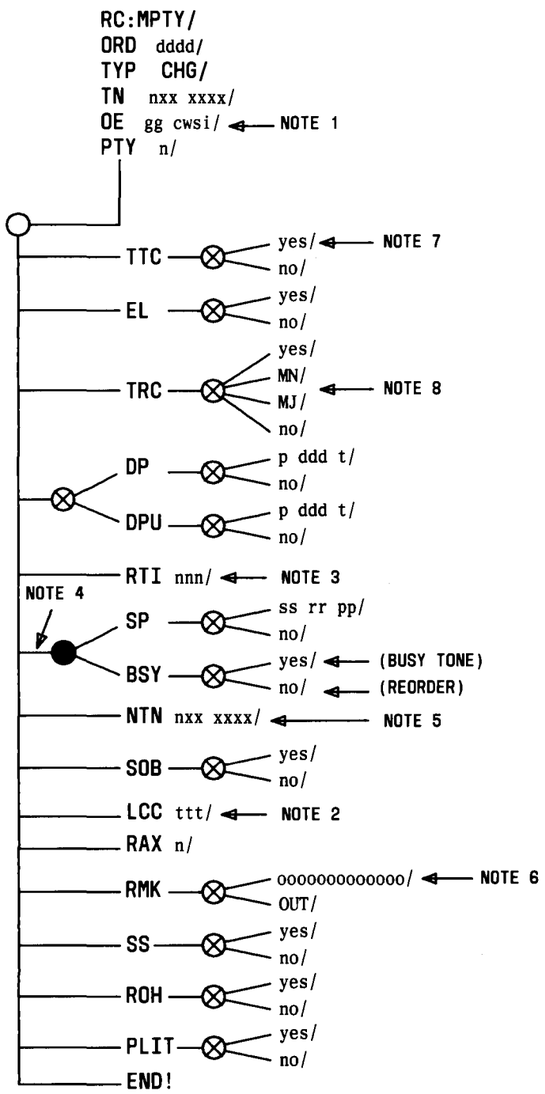

Fig. 16—RC:MPTY, TYP CHG Message Flowchart

A. NOTES

1. An RMK keyword can be used to add remarks to the Telephone number Table Form ESS 3100-R. A remark may be either "general" or "predefined". A general remark can have a maximum of 13 alphanumeric characters, arranged optionally. A predefined remark selected from the following will be automatically dated.

REMARK	MEANING
BC	Business Change
BD	Business Disconnect
DLL	Dial Long Lines
DNA	Do Not Assign
ICP	Intercept
MAN	Manual Line
NP	Nonpublished
PC	Public Coin
PLA	Plant Assignment
RC	Resident Change
RD	Resident Disconnect
RSV	Reserve
SPC	Semipublic Coin
VAC	Vacant

If the RMK keywork is not included in the TYP OUT message, the remark, VAC, will be printed on Form ESS 3100-R and dated.

RC:MPTY OUT FLOWCHART

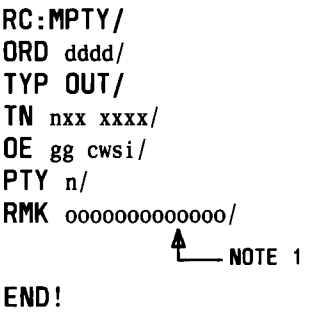

Fig. 17—RC:MPTY, TYP OUT Message Flowchart

A. NOTES

1. OE is always required. For ground start lines, use level 6 on switch 1, 2, 5, or 6; or use level 7 on any switch. For GST assignments, the service or circuit order must be coordinated with Central Office personnel to assure that the line ferrod is strapped for ground start service.
2. RAX is used with keyword LCC to determine the classes of service. If RAX is not used, the rate area is assumed to be 0.
3. For GST lines, select office equipment (OE) numbers described in Note 1.
4. Include this keyword only if the terminal assignment differs from the MLHG group assignment.
5. A terminal cannot have both a BTN and BLN assignment.
6. RTI is used when the terminating major class is intercept, special routing, or denied service. If RTI is not specified and the major terminating class is intercept, the default value RTI 8 is assigned.
7. Include LHT keyword if hunting is required from the terminal being assigned.
8. An RMK keyword can be used to add remarks to the Telephone number Table Form ESS 3100-R. A remark may be either "general" or "predefined". A general remark can have a maximum of 13 alphanumeric characters, arranged optionally. A predefined remark selected from the following will be automatically dated.

REMARK	MEANING
BC	Business Change
BD	Business Disconnect
DLL	Dial Long Lines
DNA	Do Not Assign
ICP	Intercept
MAN	Manual Line
NP	Nonpublished
PC	Public Coin
PLA	Plant Assignment
RC	Resident Change
RD	Resident Disconnect
RSV	Reserve
SPC	Semipublic Coin
VAC	Vacant

9. When a call is being traced, the MN or MJ keyword provides for a minor or a major alarm at the central office.

B. DEFINITIONS OF KEYWORDS

KEYWORD	DEFINITION
BLN	SPECIAL TOLL BILLING
BTN	BILL TO NUMBER
CSL2	CUSTOMER DIALED CHANGE TO 2-DIGIT SPEED CALLING LIST
CSL1	CUSTOMER DIALED CHANGE TO 1-DIGIT SPEED CALLING LIST
DP	DISTRIBUTOR TRIPLET FOR SLEEVE LEAD FUNCTION. P = PERIPHERAL PULSE DISTRIBUTOR (0 OR 1) DDD = PERIPHERAL DECODER (000 THROUGH 255) T = TRIPLET (0 THROUGH 3)
DPM	DISTRIBUTOR TRIPLET FOR MESSAGE REGISTERS. VALUES P DDD & T ARE THE SAME AS DP
DPU	DISTRIBUTOR TRIPLET FOR NOISE IMMUNITY LINE CIRCUIT. VALUES P DDD & T ARE THE SAME AS DP
EL	ESSENTIAL LINE CLASS A
ESC	THREEWAY CALLING
ESF	SPEED CALL 2-DIGIT SERVICE
ESL	SPEED CALL 1-DIGIT SERVICE
ESM	CALL FORWARDING
GST	GROUND START
HML	GROUP NUMBER. RANGE IS DECIMAL 0 THROUGH DEFINED OFFICE MAXIMUM (ABSOLUTE MAX = 63)
OE	OFFICE EQUIPMENT NUMBER GG = CONCENTRATOR GROUP (01 THROUGH 15) C = CONCENTRATOR (0 OR 1) W = SWITCH GROUP (0 THROUGH 2) S = SWITCH (0 THROUGH 7) I = INPUT LEVEL (0 THROUGH 7)
LCC	LINE CLASS CODE
LHT	LAST HUNT TERMINAL
MR	MESSAGE REGISTER
ORD	ORDER NUMBER
PLIT	PROHIBIT LINE INSULATION TEST
RAX	RATE AREA
ROH	RECEIVER OFF-HOOK TONE
RTI	DIRECT ROUTE INDEX
RMK	REMARKS
SOB	SERVICE OBSERVING FEATURE
SS	SPECIAL STUDIES
TER	TERMINAL NUMBER
TN	TELEPHONE NUMBER
TRC	TRACE
TTC	TOUCH-TONE CALLING
TYP	TYPE OF SERVICE ORDER

C. RC:MTL NEW FLOWCHART

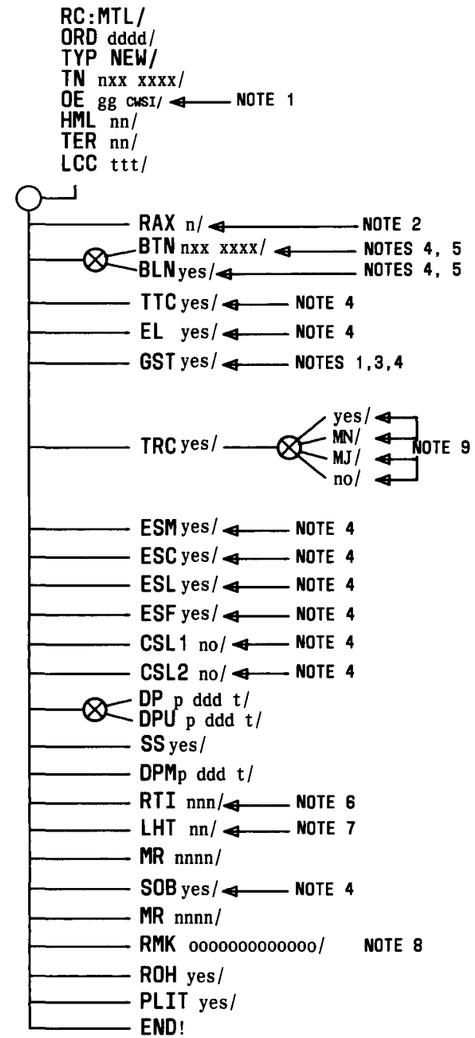

Fig. 18—RC:MTL, TYP NEW Message Flowchart

A. NOTES

1. The RC:MTL, TYP CHG messages change assignments for MLHG terminals. To identify the MLHG group assignments and existing assignments for the terminal being changed type:

   OP:OFR/
   GRP nn/
   TER nn/
   HDR yes/
   END!

2. OE is always required except for TNs on intercept or special routing.
3. Only selected OE or IOE terminals can be used for GST service. For GST terminals, use level 6 on switch 1, 2, 5, or 6; or use level 7 on any switch. GST assignments require coordination with Central Office personnel to assure proper strapping of line ferrods.
4. Include this keyword only if the terminal assignment differs from the MLHG group assignment.
5. A terminal cannot have both a BTN and BLN assignment.
6. RTI is used when the terminating major class is intercept, special routing, or denied service. If RTI is not specified and the major terminating class is intercept, the default value RTI 8 is assigned.
7. An RMK keyword can be used to add remarks to the Telephone number Table Form ESS 3100-R. A remark may be either "general" or "predefined". A general remark can have a maximum of 13 alphanumeric characters, arranged optionally. A predefined remark selected from the following will be automatically dated.
8. When a call is being traced, the MN or MJ keyword provides for a minor or a major alarm at the central office.

REMARK	MEANING
BC	Business Change
BD	Business Disconnect
DLL	Dial Long Lines
DNA	Do Not Assign
ICP	Intercept
MAN	Manual Line
NP	Nonpublished
PC	Public Coin
PLA	Plant Assignment
RC	Resident Change
RD	Resident Disconnect
RSV	Reserve
SPC	Semipublic Coin
VAC	Vacant

B. DEFINITIONS OF KEYWORDS

KEYWORD	DEFINITION
BLN	SPECIAL TOLL BILLING
BTN	BILL TO NUMBER
CSL2	CUSTOMER DIALED CHANGE TO 2-DIGIT SPEED CALLING LIST
CSL1	CUSTOMER DIALED CHANGE TO 1-DIGIT SPEED CALLING LIST
DP	DISTRIBUTOR TRIPLET FOR SLEEVE LEAD FUNCTION. P = PERIPHERAL PULSE DISTRIBUTOR (0 OR 1) DDD = PERIPHERAL DECODER (000 THROUGH 255) T = TRIPLET (0 THROUGH 3)
DPM	DISTRIBUTOR TRIPLET FOR MESSAGE REGISTERS. VALUES P DDD & T ARE THE SAME AS FOR DP
DPU	DISTRIBUTOR TRIPLET FOR NOISE IMMUNITY LINE CIRCUIT. VALUES P DDD & T ARE THE SAME AS DP
EL	ESSENTIAL LINE CLASS A
ESC	THREEWAY CALLING
ESF	SPEED CALL 2-DIGIT SERVICE
ESL	SPEED CALL 1-DIGIT SERVICE
ESM	CALL FORWARDING
GST	GROUND START
HML	GROUP NUMBER. RANGE IS DECIMAL 0 THROUGH DEFINED OFFICE MAXIMUM (ABSOLUTE MAX = 63)
IOE	NEW OFFICE EQUIPMENT NUMBER GG = CONCENTRATOR GROUP (01 THROUGH 15) C = CONCENTRATOR (0 OR 1) W = SWITCH GROUP (0 THROUGH 2) S = SWITCH (0 THROUGH 7) I = INPUT LEVEL (0 THROUGH 7)
LCC	LINE CLASS CODE
LHT	LAST HUNT TERMINAL
MR	MESSAGE REGISTER
NTN	NEW TELEPHONE NUMBER
OE	OFFICE EQUIPMENT NUMBER DEFINITION AND RANGE SAME AS IOE
ORD	ORDER NUMBER
PLIT	PROHIBIT LINE INSULATION TEST
RAX	RATE AREA
ROH	INHIBIT RECEIVER OFF HOOK TONE
RMK	REMARKS
RTI	DIRECT ROUTE INDEX
SOB	SERVICE OBSERVING FEATURE
SS	SPECIAL STUDIES
TER	TERMINAL NUMBER
TN	TELEPHONE NUMBER
TRC	TRACE
TTC	TOUCH-TONE CALLING
TYP	TYPE OF SERVICE ORDER

C. RC:MTL CHANGES FLOWCHART

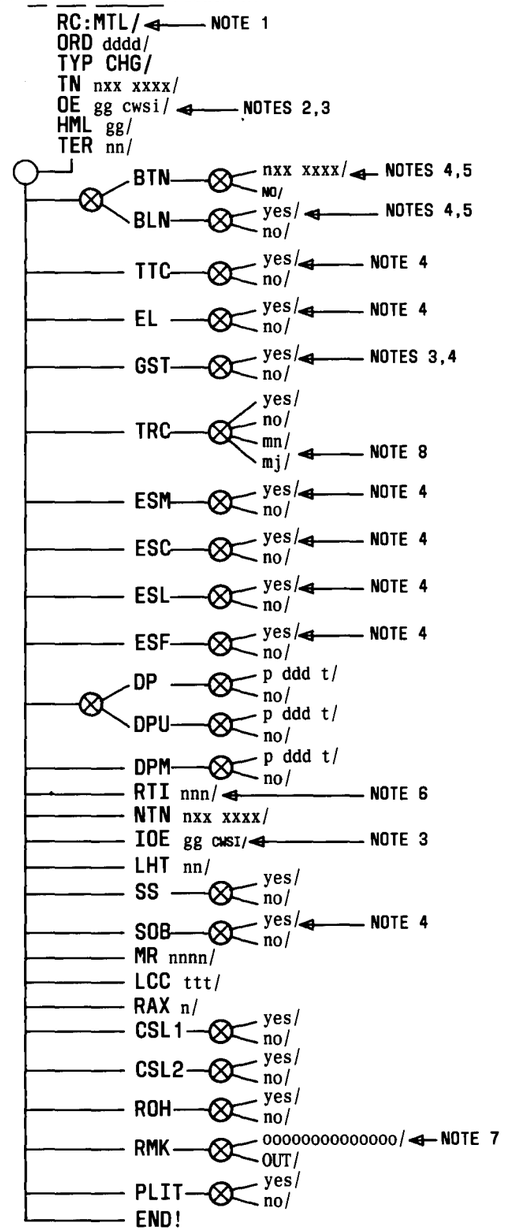

Fig. 19—RC:MTL, TYP CHG Message Flowchart

A. NOTES

1. An RMK keyword can be used to add remarks to the Telephone number Table Form ESS 3100-R. A remark may be either "general" or "predefined". A general remark can have a maximum of 13 alphanumeric characters, arranged optionally. A predefined remark selected from the following will be automatically dated.

REMARK	MEANING
BC	Business Change
BD	Business Disconnect
DLL	Dial Long Lines
DNA	Do Not Assign
ICP	Intercept
MAN	Manual Line
NP	Nonpublished
PC	Public Coin
PLA	Plant Assignment
RC	Resident Change
RD	Resident Disconnect
RSV	Reserve
SPC	Semipublic Coin
VAC	Vacant

If the RMK keywork is not included in the TYP OUT message, the remark, VAC, will be printed on Form ESS 3100-R and dated.

B. RC:MTL TYP OUT FLOWCHART

```
RC:MTL/
ORD ddd/
TYP OUT/
TN nx xxxx/
OE gg cwsi/
HML gg/
TER nn/
RMK oooooooooooo/ NOTE 1
END!
```

Fig. 20—RC:MTL, TYP OUT Message Flowchart

A. NOTES

1. Use the keyword, YES, if all terminals require the feature. Omit the keyword if some terminals do not require the feature. The feature can be provided for a terminal on an individual basis by an RC:MTL message.
2. Either BTN Nxx xxxx or BLN YES keyword is required, but only one of the keywords is allowed. BTN assigns the group billing number, however, each group terminal can be assigned a different BTN by an RC:MTL message. If BLN is used, each group terminal must be assigned a BLN number by an RC:MTL message.
3. If RAX is not included in the message, RAX 0 will be assigned.
4. The RMK keyword provides an optional remark on Form ESS 3105-R. The remark can be a maximum of 14 alphanumeric characters.

B. DEFINITIONS OF KEYWORDS

KEYWORD	DEFINITION
BLN	SPECIAL TOLL BILLING
BTN	BILL TO NUMBER
CSL2	CUSTOMER DIALED CHANGE TO 2-DIGIT SPEED CALLING LIST
CSL1	CUSTOMER DIALED CHANGE TO 1-DIGIT SPEED CALLING LIST
EHT	STOP HUNT TERMINAL
EL	ESSENTIAL LINE CLASS A
ESC	THREEWAY CALLING
ESF	SPEED CALL, 2-DIGIT SERVICE
ESL	SPEED CALL, 1-DIGIT SERVICE
GST	GROUND START
HML	GROUP NUMBER, RANGE IS DECIMAL 0 THROUGH DEFINED OFFICE MAXIMUM (ABSOLUTE MAX = 63)
HSZ	HUNT GROUP SIZE
LCC	LINE CLASS CODE
NST	NIGHT STOP TERMINAL
ORD	ORDER NUMBER
RAX	RATE AREA
RMK	REMARKS
SCHED	TRAFFIC SCHEDULE
SKEY	CONTROL KEY n = 1 for SPN associated with RMB key 1 = 2 for SPN associated with RMB key 2 = 3 for SPN associated with RMB key 3 = 4 for SPN associated with RMB key 4 = 5 for SPN associated with RMB key 5 = 6 for SPN associated with RMB key 6 = 7 for SPN associated with RMB key 7 = 8 for SPN associated with NST key = 9 for SPN associated with EHT key
SOB	SERVICE OBSERVING FEATURE
SPN	SCAN POINT NUMBER ASSOCIATED WITH SKEY FUNCTION ss = scanner number rr = row number pp = point number
SS	SPECIAL STUDIES
TTC	TOUCH-TONE CALLING
TYP	TYPE OF SERVICE ORDER

C. RC:MLHG NEW FLOWCHART

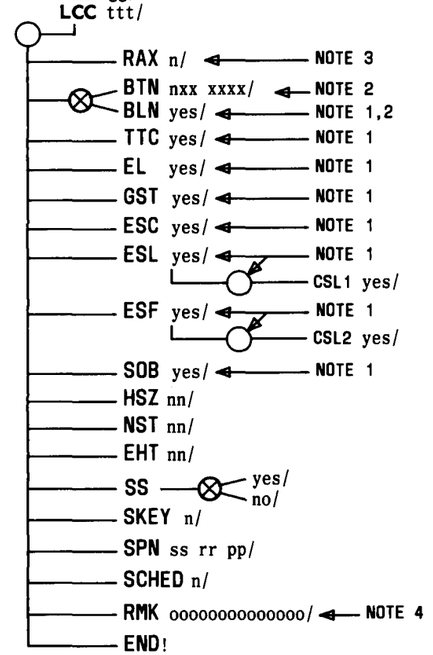

Fig. 21—RC:MLHG, TYP NEW Message Flowchart

A. NOTES

1. The TYP CHG keyword is used to change or remove MLHG assignments.
2. The YES keyword is used to assign all MLHG terminals the indicated feature. The NO keyword removes the feature from all MLHG terminals. If the NO keyword is used, the feature can be assigned to MLHG terminals on an individual terminal basis by using RC:MTL message.
3. The RMK keyword provides an optional remark on Form ESS 3105-R. The remark can be a maximum of 14 alphanumeric characters.

B. DEFINITIONS OF KEYWORDS

KEYWORD	DEFINITION
BLN	SPECIAL TOLL BILLING
BTN	BILL TO NUMBER
CSL2	CUSTOMER DIALED CHANGE TO 2-DIGIT SPEED CALLING LIST
CSL1	CUSTOMER DIALED CHANGE TO 1-DIGIT SPEED CALLING LIST
EHT	STOP HUNT TERMINAL
EL	ESSENTIAL LINE CLASS A
ESC	THREEWAY CALLING
ESF	SPEED CALL, 2-DIGIT SERVICE
ESL	SPEED CALL, 1-DIGIT SERVICE
GST	GROUND START
HML	GROUP NUMBER, MULTILINE
HSZ	HUNT GROUP SIZE
LCC	LINE CLASS CODE
NST	NIGHT STOP TERMINAL
ORD	ORDER NUMBER
RAX	RATE AREA
RMK	REMARKS
SCHED	TRAFFIC SCHEDULE
SOB	SERVICE OBSERVING FEATURE
SS	SPECIAL STUDIES
TTC	TOUCH-TONE CALLING
TYP	TYPE OF SERVICE ORDER

C. RC:MLHG CHANGES FLOWCHART

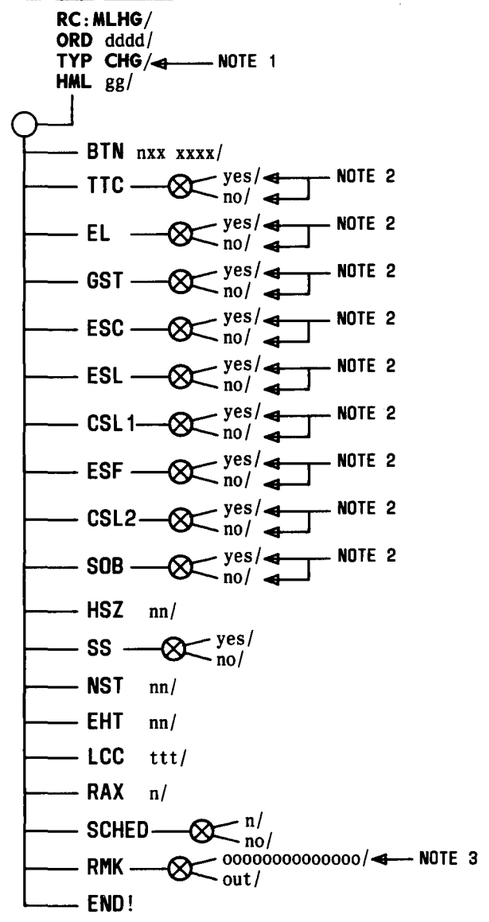

Fig. 22—RC:MLHG, TYP CHG Message Flowchart

A. NOTES

1. Before a MLHG is removed by a MLHG type OUT message, all group terminals should be removed from the group by RC:MTL type OUT messages.

2. This change is active immediately upon successful completion of the message.

B. DEFINITIONS OF KEYWORDS

KEYWORD	DEFINITION
ORD	ORDER NUMBER
TYP	TYPE OF SERVICE ORDER
HML	GROUP NUMBER, MULTILINE

C. RC:MLHG, TYP OUT FLOWCHART

RC:MLHG/◄— NOTES 1, 2
ORD dddd/
TYP OUT/
HML gg/
END!

Fig. 23—RC:MLHG, TYP OUT Message Flowchart

A. NOTE
1. All keywords are required.

B. DEFINITIONS OF KEYWORDS

KEYWORD	DEFINITION
CFN	CALL FORWARDING NUMBER
TN	TELEPHONE NUMBER

C. RC:CFN MESSAGE WILL ACTIVATE THE SERVICE WITH A CALL FORWARDING NUMBER, CHANGE THE NUMBER, OR DEACTIVATE THE SERVICE.

RC:CFN FLOWCHART

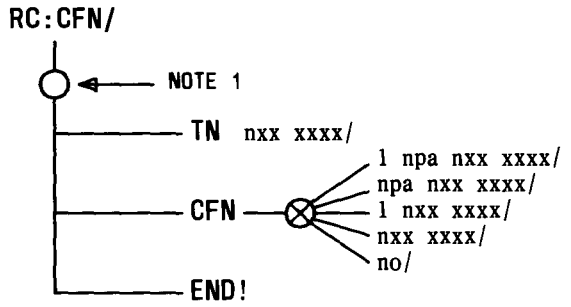

Fig. 24—RC:CFN Message Flowchart

A. NOTES

1. The customer must already have speed call 1-digit service (ESL) nn = 2 through 9, or speed call 2-digit service (ESF) nn = 20 through 49.

2. Refer to RC:LINE, RC:MLHG, or RC:MTL for information on activating 1- or 2-digit speed calling service.

3. All keywords are required.

B. DEFINITIONS OF KEYWORDS

KEYWORD	DEFINITION
ADN	ABBREVIATED DIAL NUMBER NN = 1-DIGIT (2 THROUGH 9) NN = 2-DIGIT (20 THROUGH 49)
DGS	SPEED CALL NUMBER
OE	OFFICE EQUIPMENT NUMBER
ORD	ORDER NUMBER
TN	TELEPHONE NUMBER

C. RC:SCN IS USED TO CHANGE THE SPEED CALLING LIST OF A CUSTOMER GIVEN THE TELEPHONE NUMBER.

RC:SCN FLOWCHART

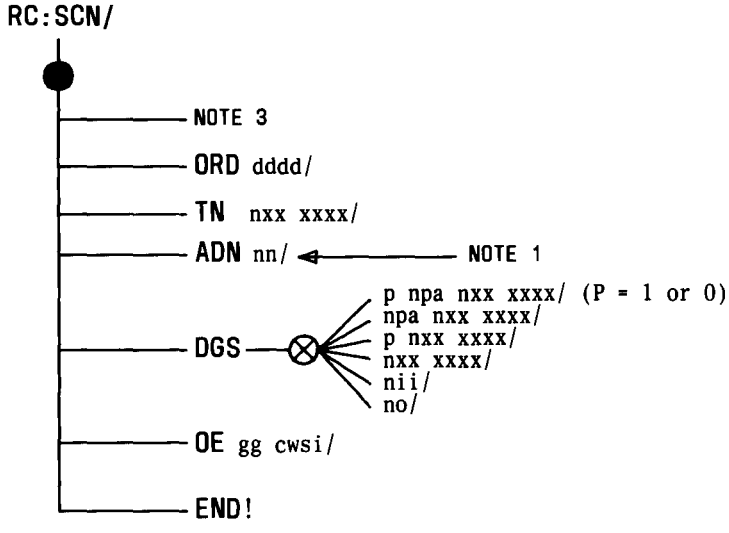

Fig. 25—RC:SCN Speed Calling Message Flowchart

```
ESS 3100-R                          NO. 3 ESS                          TN xxx-xxxx

BASE & CONTROL: xxxxxx          TELEPHONE NUMBER
OFFICE: xxxxxxxxxxxx          DATE mm/dd/yy  hh:mm:ss
-------------------------------------------------------------------------------
    !OFFICE! ! !   !   EQUIPMENT  !          !   !    !S!S!
    !EQUIP ! ! !   !   FEATURES   !MLH GROUP !   !SOFT!U!U!
    !------! ! !   !--------------+----------!   !MSG !P!P!
 TN !CGCS L!P!R! L !G TE!ECEC!EEB !H !T !L !R! R !REG !P!P!   REMARKS
 EU !OROWSE!T!A! C !SETS!SLSL!SSL !M !E !H !M! T !(MR)!L!L!    (13)
 LM !NPNGWV!Y!X! C !TLCX!M2F1!LCN !L !R !T !B! I !    !1!2!
----+------+-+-+---+----+----+----+--+--+--+-+---+----+-+-+-------------
```

TEL NUM - Telephone Number
OFFICE EQUIP - Office Equipment Number
- CON GRP - Concentrator Group
- CON - Concentrator
- SWG - Switch Group
- SW - Switch
- LEV - Level

PTY - Party Number
RAX - Rate Area
LCC - Line Class Code
EQUIPMENT FEATURES - Equipment Features
- GST - Ground Start
- EL - Essential Line
- TTC - TOUCH-TONE
- ESX - Call Waiting
- ESM - Call Forwarding
- CL2 - Change Speed Calling - Two Digit
- ESF - Speed Calling - Two Digit
- CL1 - Change Speed Calling - One Digit
- ESL - Speed Calling - One Digit
- ESC - 3-Way Calling
- BLN - Special Toll Billing

MLH GROUP - Multiline Hunt Group
- HML - Group Number
- TER - Multiline Hunt Group Terminal Number
- LHT - Last Hunt Terminal
- RMB - Random Make Busy

RTI - Route Index or Return Telephone Index
SOFT MSG REG (MR) - Software Message Register
SUPPL1 - Supplementary Information, Form 3107-1R
SUPPL2 - Supplementary Information, Form 3107-2R

Fig. 27—Example of Telephone Number Table—Form ESS 3100-R

ESS 3105-1(03)TG-3

MULTI-LINE HUNTING GROUP TABLE
NO. 3 ESS

DATE ___-___-___ (1 2 3 4 5)

BASE & CONTROL _____ (6 — 11)

ESS UNIT _____

PAGE 1 (17 — 19) OF 1

FORM CODE 52 (14 15)

MLHG NO. 03

GROUP INFORMATION

MULTI-LINE HUNT GRP. (20 21)	HIGHEST MEMBER NO. (22 23)	HUNT SIZE (24 25)	RATE AREA (26)	LINE CLASS CODE (27 29)	EQUIPMENT AND FEATURES: GST (30)	EL (31)	TTC (32)	CHF (33)	ESF (34)	CHL (35)	ESL (36)	ESC (37)	BLN (38)	BILLING NUMBER: OFFICE CODE (39 41)	TELEPHONE NUMBER (42 45)	NIGHT STOP HUNT TERM. (46 47)	STOP HUNT TERMINAL (EHT) (48 49)	TRAFFIC SCHEDULE (50)	REMARKS (64 79)	REVISE (80)
03	10	07	1	TCG			✓	✓	✓					481	6245	02	05			

MEMBER INFORMATION

MEMBER NUMBER	OFFICE CODE	TELEPHONE NUMBER	OFFICE EQUIP NUMB.: CONC. GROUP	CONC.	SW. GRP.	SWITCH	LEVEL	RATE AREA	LINE CLASS CODE	EQUIPMENT AND FEATURES: GST	EL	TTC	ESM	CHF	ESF	CHL	ESL	ESC	BLN	RMB	TLT	SUPPL. INFO. (3107-1)	SUPPL. INFO. (3107-2)	REMARKS
00	481	6200	04	0	1	4	2		TCK									✓						
01	481	6201	00	1	2	0	3		TLG															
02	481	6202	01	1	1	6	5		TLG															
03	481	6203	02	1	0	3	3		TCG															
04	481	6204	05	0	0	1	2		TCG															
05	481	6205	06	1	2	2	3		TCG									✓						
06	481	6206	00	0	0	4	5		TCG									✓						
07	481	6207	01	0	1	7	2		TLG															
08	481	6208	03	0	2	5	4		TCM															
09																								
10																								
11																								
12																								
13																								
14																								
15																								
16																								
17																								
18																								
19																								
20																								
21																								
22																								
23																								
24																								
25																								
26																								
27																								
28																								
29																								
30																								
31																								
32																								
33																								

Fig. 28—Example of Multiline Hunting Group Table—Form ESS 3105-TG3

```
ESS 3105-R                          NO. 3 ESS                    (HML) GRP xxx

BASE & CONTROL: xxxxxx     MULTI-LINE HUNTING GROUP TABLE
OFFICE: xxxxxxxxxxxx       DATE mm/dd/yy  hh:mm:ss

GROUP INFORMATION
-------------------------------------------------------------------------------
  !H !  ! !   !EQUIPMENT  !BILLING !  !  ! !              !       !
  !I !  ! !   !FEATURES   !NUMBER  !  !  ! !              !       !S
  !G !  ! !   !-----------+--------!N !  !S!              !       !P
  !H !HS! !   !   !   !   !   !    !IS!SH!C!    REMARKS   !   S   !A
H !EM!UI!R! L !G T!CEC!EEB! N ! TN !GT!TU!H!     (14)     !   S   !R
M !SE!NZ!A! C !SET!LSL!SSL! X ! EU !HO!ON!E!              !   B   !E
L !TM!TE!X! C !TLC!2F1!LCN! X ! LM !TP!PT!D!              !   A   !S
--+--+--+-+---+---+---+---+---+----+--+--+-+--------------+-------+--
  !  !  ! !   !   !   !   !   !    !  !  ! !              !       !

MEMBER INFORMATION
-------------------------------------------------------------------------------
  !   !    !OFFICE! !   ! EQUIPMENT  ! ! !S!S
  !   !    ! EQUIP! !   ! FEATURES   ! ! !U!U
  !   !    !------! !   !------------! ! !P!P
T ! N ! TN !CGCS L!R! L !G T!ECEC!EEB!R! !P!P
E ! X ! EU !OROWSE!A! C !SET!SLSL!SSL!M! !L!L
R ! X ! LM !NPNGWV!X! C !TLC!M2F1!LCN!B! !1!2
--+---+----+------+-+---+---+----+---+-+-+-+-
```

GROUP INFORMATION

- HML - Multiline Hunting Group Number (MLHG)
- HIGHEST MEM - Highest Member Number
- HUNT SIZE - Last Hunt Table Terminal Number of the MLHG
- RAX - Rate Area
- LCC - Line Class Code
- EQUIPMENT FEATURES
  - GST - Ground Start
  - EL - Essential Line
  - TTC - TOUCH-TONE
  - CL2 - Change Speed Calling - Two Digit
  - ESF - Speed Calling - Two Digit
  - CL1 - Change Speed Calling - One Digit
  - ESL - Speed Calling - One Digit
  - ESC - Three Way Calling
  - BLN - Special Toll Billing
- BILLING NUMBER
  - NXX - Office Code
  - TEL NUM - Telephone Number
- NIGHT STOP - Night Stop Terminal
- STOP HUNT - Stop Hunt Terminal
- SCHED - Traffic Schedule
- SSBA - Selection Status Block Address
- SPARES - Spare Members

MEMBER INFORMATION

- TER - Multiline Hunt Group Terminal Number
- NXX - Office Code
- TEL NUM - Telephone Number
- OFFICE EQUIP - Office Equipment Number
  - CON GRP - Concentrator Group
  - CON - Concentrator
  - SWG - Switch Group
  - SW - Switch
  - LEV - Level
- RAX - Rate Area
- LCC - Line Class Code
- EQUIPMENT FEATURES - Equipment Features
  - GST - Ground Start
  - EL - Essential Line
  - TTC - TOUCH-TONE
  - ESM - Call Forwarding
  - CL2 - Change Speed Calling - Two Digit
  - ESF - Speed Calling - Two Digit
  - CL1 - Change Speed Calling - One Digit
  - ESL - Speed Calling - One Digit
  - ESC - 3-Way Calling
  - BLN - Special Toll Billing
- RMB - Random Make Busy
- SUPPL1 - Supplementary Information, Form 3107-1R
- SUPPL2 - Supplementary Information, Form 3107-2R

Fig. 29—Example of Multiline Hunting Group Table—Form ESS 3105-R

DATE 1 2 3 4 5

SUPPLEMENTARY INFORMATION TABLE

NO. 3 ESS
3E3

ESS 3107-1B(04)TG-3

OFFICE CODE 231 (17–19)

HUNORED 89

BASE & CONTROL (6–11)

ESS UNIT

FORM CODE 56 (14–15)

TELEPHONE NUMBER	HOT LINE NUMBER				SERIES COMPLETE		SLEEVE LEAD (DP) / NOISE IMMUNITY (DPU)				MESSAGE REG (DPM) / COIN LINE (DPCN)				REORDER/ BUSY SCAN POINT (BSY)				BILLING NUMBER BTN / OUTWATS			COMMENTS	REVISE
	PREFIX	NPA	OFFICE CODE	TELEPHONE NUMBER	OFFICE CODE	TELEPHONE NUMBER	PER. PULSE DIST'L	PERIPHERAL DECODER	TRIPLET	TYPE	PER. PULSE DIST'L	PERIPHERAL DECODER	TRIPLET	POINT	TYPE	BUSY TONE	SCANNER	ROW	POINT	OFFICE CODE	TELEPHONE NUMBER	TYPE		
(20–23)	(24)	(25–27)	(28–30)	(31–34)	(35–37)	(38–41)	(42)	(43–45)	(46)	(47)	(48)	(49–51)	(52)	(53)	(54)	(55)	(56–57)	(58–59)	(60–61)	(62–64)	(65–68)	(69)		(80)
8957					231	8958														232	5411	B	ACE LCM	
8958					↓	8959																B		
8959					↓	8960																B		
8960					232	5411														↓	↓	B	↓ ↓	
8987							0	00	7	2S										232	9941	B	ROTL SEC	
8989					231	8990																	FETL 105	
8990					231	8989																	FETL 105	
8991							0	01	0	3S										232	9941	B	ROTL DATA	

Fig. 30—Example of Supplementary Information Table—Form ESS 3107-1TG3

DATE ___ 1 2 3 4 5

SUPPLEMENTARY INFORMATION TABLE

NO 3 ESS 3E3

ESS 3107-2B(03) TG-3

OFFICE CODE 231 (17 18)

BASE & CONTROL 99923Ø (6 11)

HUNDRED 89

ESS UNIT ___

FORM CODE 9 7 (14 15)

TELEPHONE NUMBER (20 23)	RETURN TELEPHONE NUMBER: PREFIX (24)	RETURN TELEPHONE NUMBER: NPA (25 27)	RETURN TELEPHONE NUMBER (28 34)	MESSAGE CLASS (36 38)	CONTR NUMBER (37)	PORT (38)	AUTOMATIC DIALUP (39)	TIME OUT (40 42)	ENTRY TYPES (43 44)	TONE (45)	NO DIAL BACK (46)	PRIORITY (47 48)	MEMBER NUMBER (49 51)	MITE TST DESK (52)	HAML (53)	OTHER FEATURES: ROH (54)	PLIT (55)	CALL TRACE (56)	SS (57)	SOB (58)	COMMENTS (59)
8939																	✓				COIN
8969																		MN			
8974																				✓	
8987			542-1222						10				000		✓		✓				ROTL SECURITY
8988																	✓				CONNECTION APPRAISAL
8989									34								✓				FETL TER 0
8990									35								✓				FETL TER 1
8991			542-1223	10	2!				03								✓				ROTL DATA

Fig. 31—Example of Supplementary Information Table—Form ESS 3107-2TG3

```
ESS 3107-1R                          NO. 3 ESS                    TN xxx-xxxx

BASE & CONTROL: xxxxxx        SUPPLEMENTARY INFO
OFFICE: xxxxxxxxxxxx       DATE mm/dd/yy  hh:mm:ss
-------------------------------------------------------------------------
    !   HOT LINE    !         !  DP    !  DPM     !  REORDER !  BILLING
    !    NUMBER     ! SERIES !-------+---------!   BUSY   !  NUMBER
    !               !COMPLETE!  DPU   !  DPCU    !   (BSY)  ! BTN/OWATS
    !--------------+--------+-------+---------+----------!----------
    !P!   !   !    !   !    !     ! !     ! ! ! !        !   !    !
    !R!   !   !    !   !    !     ! !     ! ! ! !        !   !    !
    !E!   !   !    !   !    !    T!T!    T! !T!B!        !   !    !T
 TN !F! N ! N ! TN ! N ! TN !P   R!Y!P   R!P!Y!U!S  R  P ! N ! TN !Y
 EU !I! P ! X ! EU ! X ! EU !PP  I!P!PP  I!N!P!S!C  O  N ! X ! EU !P
 LM !X! A ! X ! LM ! X ! LM !DD  P!E!DD  P!T!E!Y!N  W  T ! X ! LM !E
----+-+---+---+----+---+----+-----+-+-----+-+-+-+--------+---+----+-
```

TEL NUM - Associated Telephone Number (3100-R)
HOT LINE NUMBER
- PREFIX - Prefixing
- NPA - Numbering Plan Area
- NXX - Terminating Office Code
- TEL NUM - Telephone Number of Terminating Station

SERIES COMPLETE - Series Completion
- NXX - Office Code
- TEL NUM - Telephone Number of Billing Station

DP - Sleeve Lead Peripheral Decoder Point
DPU - Noise Immunity Peripheral Decoder Point
- PPD - Peripheral Pulse Distributor
- PD - Peripheral Decoder
- TRIP - Triplet
- TYPE - S = Sleeve Lead (DP)/N = Noise Immunity Circuit (DPU)

DPM - Message Register Peripheral Decoder Point
DPCU - Coin Line Peripheral Decoder Point
- PPD - Peripheral Pulse Distributor
- PD - Peripheral Decoder
- TRIP - Triplet
- PNT - Dial Tone First Coin Line, Point
- TYPE - M = Hardware Message Register (DPM)/C = Coin (DPCN)

REORDER BUSY (BSY) - Reorder or Busy Tone Scan Point
- BUSY - Busy Tone
- SCN - Scanner
- ROW - Row
- PNT - Point

BILLING NUMBER BTN/OWATS
- NXX - Billing Office Code
- TEL NUM - Telephone Number
- TYPE - B = Billing Number (BTN)/O = Outwats Number (OWATS)

Fig. 32—Example of Supplementary Information Table—Form ESS 3107-1R

ESS 3107-2R NO. 3 ESS TN xxx-xxxx

BASE & CONTROL: xxxxxx SUPPLEMENTARY INFO
OFFICE: xxxxxxxxxxxx DATE mm/dd/yy hh:mm:ss

| | | |

ESS 3171-R NO. 3 ESS OE xxxxxx

BASE & CONTROL: xxxxxx OFFICE EQUIPMENT NUMBER
OFFICE: xxxxxxxxxxx DATE mm/dd/yy hh:mm:ss

OFFICE EQUIP		LINES AND MLH GROUPS					TRUNKS AND SERVICE CKTS		
		DIRECTORY NUM				EQUIP LOC (EQL)	TRK ORDER CODE (TOC)	SUPV SP	
CGCS OROWSE NPNGWV	GRP-MEM PORT	PARTY 1/3/5/7	PARTY 2/4/6/8	GST	RAX	LCC	T-FF-B-LL-PP		SCN ROW PNT

OFFICE EQUIP - Office Equipment Number
  CON GRP - Concentrator Group
  CON - Concentrator
  SWG - Switch Group
  SW - Switch
  LEV - Level
GRP-MEM - Group and Member Number
PORT - Port Identification
LINES AND MLH GROUPS
  DIRECTORY NUM - Directory Number*
    PARTY 1 PARTY 2
    PARTY 3 PARTY 4
    PARTY 5 PARTY 6
    PARTY 7 PARTY 8
  GST - Ground Start
  RAX - Rate Area
  LCC - Line Class Code
TRUNKS AND SERVICE CKTS
  EQUIP LOC (EQL) - Equipment Location
    T - Frame Type**
    FF - Frame Number
    B - Bay
    LL - Level
    PP - Position
  TRK ORDER CODE (TOC) - Trunk Order Code
  SUPV SP - Supervisory Scan Point
    SCN - Scanner
    ROW - Row
    PNT - Point

* DIRECTORY NUM
  Includes autoconnect trigger numbers. There are a maximum of six autoconnect trigger numbers per Office Equipment number. For convenience, each will print in party positions 1 through 6.

** EQUIP LOC (EQL)
  T - Frame Type
    C - Control
    N - Network
    M - Miscellaneous
    T - Test

Fig. 34—Example of Office Equipment Number—Form ESS 3171-R

TABLE A

RC MESSAGE KEYWORDS

KEY-WORD	DESCRIPTION	USED FOR MESSAGE RC:						
		LINE	TWOPTY	MPTY	MLHG	MTL	SCN	CFN
ADN	Abbreviated Dial Number						X	
BLN	Bill Listed Number (See Glossary)	X			X	X		
BSY	Busy (See Glossary)	X	X	X				
BTN	Bill to Number (See Glossary)	X			X	X		
CFN	Call Forwarding Number							X
CHG	See Keyword TYP							
CSL1	Speed Call Change, 1-Digit Service (See Glossary)	X			X	X		
CSL2	Speed Call Change, 2-Digit Service (See Glossary)	X			X	X		
DGS	Speed Call Number						X	
DP	Distributor Point Triplet	X	X	X		X		
DPCN	Distributor Point Triplet for Coin Line Circuit	X						
DPM	Distributor Point Triplet for Message Registers	X	X			X		
DPU	Distributor Point Triplet for Noise Immunity Line Circuit	X	X	X		X		
EHT	Stop Hunt Terminal				X			
EL	Essential Line	X	X	X	X	X		
END!	End of Message	X	X	X	X	X	X	X
ESC	Threeway Calling (See Glossary)	X			X	X		
ESF	Speed Call 2-Digit Service (See Glossary)	X			X	X		
ESL	Speed Call 1-Digit Service (See Glossary)	X			X	X		
ESM	Call Forwarding (See Glossary)	X				X		

TABLE A (Contd)

RC MESSAGE KEYWORDS

KEY-WORD	DESCRIPTION	USED FOR MESSAGE RC:						
		LINE	TWOPTY	MPTY	MLHG	MTL	SCN	CFN
ESX	Call Waiting Service (See Glossary)	X						
GST	Ground Start	X			X	X		
HLN	Hot Line Number	X						
HML	Multiline Hunting Group Number				X	X		
HSZ	Last Huntable Terminal Number for Multiline Hunting Group				X			
IOE	New Office Equipment Number	X				X		
LCC	Line Class Code	X	X	X	X	X		
LHT	Last Hunt Terminal					X		
MR	Software Message Register	X	X			X		
NST	Night Stop Terminal				X			
NTN	New Telephone Number	X	X	X		X		
OE	Office Equipment	X	X	X		X	X	
ORD	Order Number	X	X	X	X	X		
OUT	See Keyword TYP							
PLIT	Prohibit Line Insulation Test	X	X	X		X		
PTY	Party Number		X	X				
RAX	Rate Area Data	X	X	X	X	X		
RMK	Remarks	X	X	X	X	X		
ROH	Receiver Off-Hook	X	X	X		X		
RTI	Route Index	X	X	X		X		
SCHED	Traffic Schedule				X			
SCN	Speed Call Number						X	

TABLE A (Contd)

RC MESSAGE KEYWORDS

KEY-WORD	DESCRIPTION	USED FOR MESSAGE RC:						
		LINE	TWOPTY	MPTY	MLHG	MTL	SCN	CFN
SER	Series Completion Directory Number (See Glossary)	X						
SKEY	Control Key				X			
SOB	Service Observing Feature	X	X	X	X	X		
SP	Scan Point Number	X	X	X				
SPN	Scan Point Number Association With SKEY Function				X			
SS	Special Studies	X	X	X	X	X		
TER	Multiline Hunting Group Member Number Assigned to Telephone Number					X		
TN	Telephone Number	X	X	X		X	X	X
TRC	Call Trace (See Glossary)	X	X	X		X		
TTC	TOUCH-TONE Calling	X	X	X	X	X		
TYP	Type or Service Order	X	X	X	X	X		
	NEW — New Entry							
	CHG — Change Existing Entry							
	OUT — Remove Existing Entry							
WATS	Outward WATS	X						

TABLE B

RECENT CHANGE SERVICE ORDER VERIFICATION MESSAGES
FROM SERVICE ORDER TTY

VERIFICATION MESSAGES*	RC MESSAGES	AFFECTED LINES, GROUPS, OR SERVICES
VER:LINE/	RC:LINE/	Single party lines
VER:TWOPTY/	RC:TWOPTY/	Two party lines
VER:MPTY/	RC:MPTY/	Multiparty lines
OP:OFR/	RC:MLHG/	Multiline hunt group
VER:MTL/	RC:MTL/	Line within a multiline hunt group
VER:SCN/	RC:SCN/	Customer speed calling list
VER:MRI xxxx/		Printout of software message register
VER:CFN/	RC:CFN/	Customer call forwarding

*Additional verification messages are included in IM-3H300.

TABLE C

OFFICE RECORDS ADMINISTRATION –
OUTPUT FORM LIST

FORM NO	FORM TITLE	REMARKS PERMITTED
3100-R	TELEPHONE NUMBER	YES
3105-R	MULTI-LINE HUNTING GROUP TABLE	YES
3107-1R	SUPPLEMENTARY INFO	NO
3107-2R	SUPPLEMENTARY INFO	NO
3171-R	OFFICE EQUIPMENT NUMBER	NO
3201-R	TRUNK ASSIGNMENTS	NO
3202-1R	TRUNK GROUP	NO
3202-3R	TRUNK GROUP	YES
3204-R	TRUNK FEATURES	NO
3209-R	ONE DIGIT TRANSLATION	YES
3300-R	3 & 6 DIGIT TRANSLATION	YES
3301-R	RATE & ROUTE	YES
3302-R	CHARGE	YES
3303-1R	ROUTE INDEX EXPANSION	YES
3303-2R	ROUTE INDEX EXPANSION	YES
3304-R	CODE INDEX	YES
3306-R	LINE CLASS CODE	YES
3307-R	INTL DIRECT DISTANCE DIALING	YES
3400-R	TRAFFIC SCHEDULE BLOCK TABLE	YES
3500-1R	GENERAL INFORMATION	NO
3500-2R	GENERAL INFORMATION TABLE	NO
3500-3R	GENERAL INFORMATION TABLE	YES
3501-R	OFFICE CODE TABLE	YES
3505-R	AUTOMATIC TRUNK TEST	YES
3506-R	ALARM MONITOR DATA	YES
3576-R	UNIVERSAL SCAN POINTS	NO
3890-R	UNASSIGNED TELEPHONE NUMBERS	YES
3891-R	MAIN STATION COUNTS	NO