T-CARRIER ADMINISTRATION SYSTEM

DATA BASE IMPLEMENTATION

CONTENTS PAGE

1. GENERAL 6

2. DATA BASE OVERVIEW 7

GENERAL 7

DETERMINING FACILITY OWNERSHIP . . 7

REQUIREMENTS 8

INFORMATION SOURCES 8

DATA ENTRY 9

A. SLR Method 9

B. EFA Method 9

DATA ERRORS 10

DATA BASE ADMINISTRATION 10

DATA BASE AUDIT 10

3. DATA REQUIREMENTS 10

REQUIREMENT TABLES 10

CODE CATALOG 12

A. General 12

B. Character Codes 12

C. Self-Checking Codes 13

HIERARCHICAL ENTRY REQUIREMENTS . . 14

DATA GROUPING REQUIREMENTS . . . 14

4. DATA ENTRY 14

GENERAL 14

CONTENTS PAGE

MAGNETIC TAPE 15

DBC (DATA BASE CONTROLLER) POSITION 16

EFAC (EQUIPMENT AND FACILITIES ADMINISTRATION CONTROLLER) POSITION . . . 17

CHOICE OF DATA ENTRY VIA DATA BASE MASKS OR MAGNETIC TAPE 18

5. DETAILED DESCRIPTIONS OF INPUT DATA . 19

T-CARRIER NETWORK DATA 19

A. Office Identification 20

B. Alias Codes 21

C. Cables 21

T-CARRIER DATA 21

A. SLR (System Layout Record) Method . 21

B. T-Carrier Data (EFA Method) . . . 23

TELEMETRY DATA 23

A. Telemetry Network Data 23

B. Telemetry Assignment Data . . . 24

C. Telemetry Status Assignments . . . 25

D. Telemetry Switch Point Assignments 26

ADMINISTRATIVE DATA 27

A. Corporate Structure Data 28

B. Network Portions Data 28

AT&T TECHNOLOGIES, INC. - PROPRIETARY

Printed in U.S.A.

CONTENTS PAGE

6. ERROR RESOLUTION 29
ERROR TYPES 29
ERROR FILE 30
ERROR REPORTS 30
SUPPLEMENTAL DATA BASE REPORTS . . 31
7. DATA BASE ADMINISTRATION 31
GENERAL 31
FMAC-M RESPONSIBILITIES 32
CPC RESPONSIBILITIES 32
LINES OF COMMUNICATION 32

Figures

1. Typical Four Span T-Carrier System Showing Partial Ownership and Pseudo Terminal 33
2. Table 01 Status Display Type (Notes) . 34
3. Table 02 Carrier Group Alarm (CGA) Status Assignment (Notes) 35
4. Table 03 Maintenance Line Status Indicator (MLSI) Status Assignment (Notes) . . 36
5. Table 04 Fuse Status Assignment (Notes) 37
6. Table 05 High-Capacity Frame Alarm Set Assignment (Notes) 38
7. Table 06 Miscellaneous Equipment Status Assignment (Notes) 39
8. Table 07 Miscellaneous Alarm Message Assignment (Notes) 40
9. Table 08 High-Capacity Alarm Set Assignment Frame Type (Notes) 41
10. Table 11 Switch Subgroup Type (Notes) 42

CONTENTS PAGE

11. Table 12 RAU Switch Point Assignment (Notes) 43
12. Table 13 RAU Shelf Assignment (Notes) 44
13. Table 14 ACO Switch Point Assignment (Notes) 45
14. Table 15 Miscellaneous Equipment Switch Point Assignment (Notes) 46
15. Table 25 Office Identification (Notes) . 47
16. Table 26 Cable Identification (Notes) . 48
17. Table 27 Alias Definition (Notes) . . . 49
18. Table 28 Remote Identification (Notes) . 50
19. Table 29 Network Portion Definition (Notes) 51
20. Table 31 Corporate Structure Department Definition (Notes) 51
21. Table 32 Corporate Structure Area Definition (Notes) 52
22. Table 33 Corporate Structure Division Definition (Notes) 53
23. Table 34 Corporate Structure District Definition (Notes) 54
24. Table 35 Corporate Structure Subdistrict Definition (Notes) 55
25. Table 36 Corporate Structure Office Definition (Notes) 56
26. Table 37 TCAS Data Port Definition (Notes) 57
27. Table 39 Remote Data Port Definition (Notes) 58
28. Table 40 Switch Machine Definition (Notes) 59
29. Table 41 Scan Point Assignment (Notes) 60

CONTENTS PAGE

30. Table 43 TASC Remote Identification (Notes) 61

31. Table 44 DACS Digroup Assignment (Notes) 62

32. Table 45 D5 Frame Digroup Assignment (Notes) 63

33. Table 50 System Identification (Notes) . 64

34. Table 51 System Area Mileage—Optional (Notes) 65

35. Table 52 System Circuit Order Data—Optional (Notes) 66

36. Table 53 System Issue Data—Optional (Notes) 66

37. Table 54 System Terminal (Notes) . . 67

38. Table 55 System Bank Terminating Assembly—Optional (Notes) 68

39. Table 56 System Terminal DSX—Optional (Notes) 69

40. Table 57 System Office Repeater DSX—Optional (Notes) 70

41. Table 58 System Office Repeater (Notes) 71

42. Table 59 System Cable and Manhole Repeater (Notes) 72

43. Table DF Derived Facility Assignment (Notes) 73

44. Table 60 Patch Line Identification (Notes) 74

45. Table 61 Patch Line Mileage—Optional . 75

46. Table 62 Patch Line Circuit Order Data—Optional 75

47. Table 63 Patch Line Issue Data—Optional 76

CONTENTS PAGE

48. Table 67 Patch Line Office Repeater DSX—Optional 76

49. Table 68 Patch Line Office Repeater—Optional (Note) 77

50. Table 69 Patch Line Cable and Manhole Repeater—Optional 78

51. Table 82 Repeater DSX Assignment (Notes) 79

52. Table 90 System Identification (Notes) . 80

53. Table 91 System Administrative Data (Notes) 81

54. Table 92 System Channel Assignment (Notes) 82

55. Table 93 Equipment Type Definition (Notes) 83

56. Table 94 System Terminal Assignment (Notes) 84

57. Table 95 Terminal DSX Assignment (Notes) 85

58. Table 96 Cable Span Assignment (Notes) 86

59. Table 97 Repeater Span Assignment (Notes) 87

60. Table 98 System Span Slot Assignment (Notes) 88

61. Table 99 Repeater Span Slot Assignment (Notes) 89

62. Hierarchial Order of Data Entry . . . 90

63. Example of T-Carrier System Layout Data in Magnetic-Tape Record Format 97

64. Examples of Data Record Entry for a Two-Span System Via Magnetic-Tape Record Format 97

65. Status Display Assignment (Mask 01) Record Format 98

CONTENTS PAGE

66. Carrier Group Alarm (CGA) Assignment (Mask 02) 98

67. Maintenance Line Status Indicator (MLSI) Assignment (Mask 03) 99

68. Fuse Status Assignment (Mask 04) . . 99

69. High-Capacity Frame Alarm Set Assignment (Mask 05) 100

70. Miscellaneous Equipment Status Assignment (Mask 06) 100

71. Miscellaneous Equipment Alarm Message Assignment (Mask 07) 101

72. High-Capacity Alarm Set Assignment Frame Type (Mask 08) 101

73. Switch Subgroup Type (Mask 11) . . . 102

74. RAU Switch Point Assignment (Mask 12) 102

75. RAU Shelf Assignment (Mask 13) . . 103

76. ACO Switch Point Assignment (Mask 14) 103

77. Miscellaneous Equipment Switch Point Assignment (Mask 15) 104

78. Office Identification (Mask 25) . . . 104

79. Cable Identification (Mask 26) 105

80. Alias Definition (Mask 27) 105

81. Remote Identification (Mask 28) . . . 106

82. Network Portion Definition (Mask 29) . 106

83. Corporate Structure Company Department Definition (Mask 31) 107

84. Corporate Structure Area Definition (Mask 32) 107

85. Corporate Structure Division Definition (Mask 33) 108

86. Corporate Structure District Definition (Mask 34) 108

87. Corporate Structure Subdistrict Definition (Mask 35) 109

88. Corporate Structure Office Definition (Mask 36) 109

89. TCAS Data Port Definition (Mask 37) . 110

90. Remote Data Port Definition (Mask 39) . 110

91. Switching Machine Definition (Mask 40) 111

92. Scan Point Assignment (Mask 41) . . 111

93. TASC Remote Identification (Mask 43) . 112

94. DACS Digroup Assignment (Mask 44) . 112

95. D5 Frame Digroup Assignment (Mask 45) 113

96. T-Carrier System Layout (SLR Method) (Mask 50) 113

97. Span Layout Page 1 (SLR Method (Mask 51) 114

98. Span Layout Page 2 (SLR Method) (Mask 52) 114

99. Span Layout Page 2 (SLR Method) (Mask 53) 115

100. Span Layout Page 2 (SLR Method) (Mask 54) 115

101. T-Carrier Patch Line Layout Page 1 (SLR Method) (Mask 60) 116

102. T-Carrier Patch Line Layout Page 2 (SLR Method) (Mask 61) 116

103. T-Carrier Patch Line Span Layout Page 2 (SLR Method) (Mask 62) 117

104. T-Carrier Patch Line Span Layout Page 2 (SLR Method) (Mask 63) 117

CONTENTS PAGE

105. T-Carrier Patch Line Span Layout Page 2 (SLR Method) (Mask 64) 118

106. Repeater DSX Assignment (Mask 82) . 118

107. System Identification (EFA Method) (Mask 90) 119

108. System Channel Assignment (EFA Method) (Mask 92) 119

109. Equipment Type Definition (EFA Method) (Mask 93) 120

110. System Terminals Assignment (EFA Method) (Mask 94) 120

111. Terminal DSX Assignment (EFA Method) (Mask 95) 121

112. Cable and Repeater Span Assignment (EFA Method) (Mask 96/97) 121

113. System Span Assignment (EFA Method) (Mask 98) 122

114. Repeater to Span Assignment (EFA Method) (Mask 99) 122

115. T-Carrier Two-Span System Block Diagram 123

116. SLR Card 124

117. SLR Group 125

118. Typical EFA D-Channel Bank Assignment Record 126

119. Typical EFA Span Assignment Record . 127

120. CGA Display Assignment Data — Table A (P/O TF608-034) 128

121. CGA Status and ACI Switch Assignment Data — Table B (P/O TF608-034) . . 129

122. CGA Display Assignment Data — Table C (P/O TF608-034) 130

123. MLSI Display Assignment Data 131

CONTENTS PAGE

124. MLSI Status Assignment Data 132

125. RAU Switch and Fuse Status Display Assignment Data (P/O TF608=040) . . 133

126. RAU Shelf to Repeater Shelf Assignment Data (P/O TF608-040) 134

127. Network Portions 135

128. General Errors 135

129. Hierarchical Errors for Delete 136

130. Hierarchical Errors for Change 136

131. Status Messages for Delete and Change 137

132. P/O Magnetic-Tape Data Base Error Report 137

133. P/O Data Base Controller Error Report . 138

134. Unsuccessful Data Base Deletions . . . 139

135. Unsuccessful Data Base Changes . . . 139

136. P/O Telemetry Assignment Report . . 140

137. Unmonitored Systems Report 140

Tables

A. Listing of Data Requirement Tables (DRT's) (Refer to Fig. 62) 141

B. Listing of Data Base Masks (Refer to Fig. 62) 146

C. Cross-Reference of Item Name Abbreviations to Code Catalog Item Numbers . 150

D. Code Catalog 153

E. Magnetic-Tape Requirements 292

F. Volume Header Label Requirements . . 293

G. File Header Label Requirements . . . 294

CONTENTS PAGE

H. File Trailer Label Requirements 296

1. GENERAL

1.01 This section contains the information on the methods to be used to implement and maintain a TCAS (T-Carrier Administration System) data base. The TCAS operations require an extensive and virtually error free data base; therefore, the information in this section will aid in organizing, entering, and maintaining that data base.

1.02 This practice is being reissued to incorporate Generic 4 maintenance release additions and changes and Generic 5 new features and changes to the data base. Revision arrows are used to emphasize the significant changes. Equipment Tests Lists are not affected. The Generic 4 maintenance release additions and changes are listed in Paragraph 1.03, and Generic 5 additions and changes are listed in Paragraph 1.04.

1.03 ***Generic 4 Maintenance Release:*** The following are the data base changes:

(a) Adds DACS (Digital Access Cross-Connect System) assignment DRT (Data Requirement Table) 44 (Fig. 31) and data base mask 44 (Fig. 94)

(b) Adds D5 digroup assignment DRT 45 (Fig. 32) and data base mask 45 (Fig. 95)

(c) Changes and adds the following data fields on the miscellaneous equipment alarm message assignment DRT 07 (Fig. 8) and data base mask 07 (Fig. 71):

(1) Changes the remote office identification to the miscellaneous equipment office identification

(2) Changes the status display, word, and bit data fields to miscellaneous equipment identification data fields which are used to identify the equipment for which the message is assigned

(3) Adds a 30-character alarm message data field.

(d) Adds a POP (point of presence) data field to the office identification DRT 25 (Fig. 15) and data base mask 25 (Fig. 78)

(e) Adds a switching machine type data field to the switching machine definition DRT 40 (Fig. 28) and data base mask 40 (Fig. 91)

(f) Adds the data base audit program (Par. 2.27)

(g) Adds data base procedures when facilities are either owned by user, owned by a common carrier company, or jointly owned by user and common carrier company (Par. 2.03)

(h) Changes the hierarchical order of data entry to include DACS digroup and D5 frame digroup assignments (Fig. 62).

1.04 ***Generic 5:*** The following are the data base additions and changes:

(a) ***Linking TCAS Centrals Feature:*** This feature enables each TCAS central unit to be interconnected with up to four other TCAS central units. This eases the inconvenience of operating with a split data base, but can also be used to provide administration of systems which are in any two TCAS data bases. The following are the specific changes provided by this feature:

(1) Adds the CTRL (control) TCAS data field to the office identification DRT 25 (Fig. 15) and data base mask 25 (Fig. 78). This data field is used to redirect alarm information from the telemetry and data link sources to a foreign TCAS if the system control office is controlled by the foreign TCAS.

(2) Changes the data port mask 37 (Fig. 89) to permit viewing of all 12 data ports at one time.

(3) Changes to the data port DRT 37 (Fig. 26) to permit specification of the TCAS-to-TCAS data link to the data port type data field.

(b) ***Monitoring Special Service Systems:*** This feature provides the capability to monitor system repeaters via the MLSI (maintenance line status indicator). This allows special service systems and systems with terminal equipment not normally accessible to be monitored at repeaters

instead of at terminals. It also allows the capability to assign SCCS (Switching Control Center System) scan points to both system and patch line repeaters, so that the MLSI monitoring can be provided in offices monitored via an SCCS data link. The following are the specific changes provided by this feature:

(1) Changes the scan point assignment mask 41 (Fig. 92) to include POS (position) and SD (side) data fields for repeater assignments and T/R (transmit/receive) FLG data field to specify either repeater or terminal assignment.

(2) Changes the scan point assignment DRT 41 (Fig. 29) SYS TERM (system terminal) and SYS TERM UNIT data fields to MON BAY (monitor bay) and UNIT/SHELF (unit/shelf) and adds the TERM/RPTR FLG (terminal/repeater flag) data field. These changes and addition are used for assignment and specification of either a repeater or a terminal.

(c) ***Enhanced Terminal Bay Patterning:*** This feature identifies the common bay failures associated with dense frame configurations such as DACS (Digital Access and Cross-Connect System), D5, and DCT (digital carrier terminal). The feature adds the D5CB, DIU1, and T1DA equipment codes to the TCAS code catalog item number 317 (Table D). Any entry in DRT or data mask TERM TYPE (terminal type) data field must have the first four characters as one of the equipment base codes listed in TCAS code catalog item number 317. If an unspecified terminal type is entered in the data field, the system will default to the DXCB (digital cross-connect common bay) general channel entry.

1.05 The TCAS data base is required to provide for centralized administration of service restoration and maintenance activities for all T-Carrier Systems in a large metropolitan network. The TCAS is used within a FMAC-M (Facilities and Maintenance Administration System-Metropolitan) environment and includes the following major features:

(a) **Monitoring** of T-Carrier System and patch line failures

(b) **Patterning** to common mode failures, such as cables, terminal bays, repeater shelves, and side systems

(c) **Sectionalization** measurements to localize a system failure to a specific terminal or span line

(d) **Trouble Case Administration** for system, patch line, and pattern failures

(e) **Patch Line Administration** for restoration

(f) **Reports** for network administration.

2. DATA BASE OVERVIEW

GENERAL

2.01 The initial TCAS computer hardware and software provides a disk memory that contains the programs and a basic data base shell. The data base will contain a minimum amount of data which is common to all TCAS locations. This includes the various CDT (computer display terminal) masks that are used by the DBC (data base controller), EFAC (equipment and facility administration controller) MC (maintenance controller), and MAC (maintenance alarm controller) positions.

2.02 The great bulk of data base information to be implemented is specific and different for each TCAS. The user is solely responsible for the preparation of this data and its entry into the data base. The type of data required would include, for example, system layout information for every T-Carrier System in the area to be administered by the TCAS.

DETERMINING FACILITY OWNERSHIP

2.03 ▶The ownership of the facilities in the TCAS data base is in the following categories:

(a) Wholly owned by the company with the TCAS

(b) Wholly owned by a common carrier company

(c) Partially owned by the company (with the TCAS) and the common carrier company.

2.04 Those facilities owned entirely by the common carrier company should either be deleted from the data base or should remain in the data base under a maintenance contract. Those facilities remaining in the data base may be flagged using the facility control office as reference.

2.05 Those facilities jointly owned by the TCAS owner and the common carrier company should be modified so that only the TCAS owner's facilities remain in the data base. A scheme for this modification is based on the use of a pseudo terminal in a POP office located at the TCAS owner's and common carrier facility boundary.

2.06 Figure 1A shows a typical four span T-Carrier System containing the TCAS owner's and common carrier facilities. Figure 1B shows which part of the facilities will remain in the data base and which facilities are replaced by a pseudo terminal in the data base.

2.07 The office identification DRT 25 (Fig. 15) or data base mask 25 (Fig. 78) provides a data entry space to indicate a POP office.◀

REQUIREMENTS

2.08 The data base information required by TCAS is divided into the following categories:

(a) ***T-Carrier Assignments:*** The following are the T-carrier data items:

(1) ***T-Carrier Network:*** This data identifies all offices and cables that exist in the T-carrier network.

(2) ***T-Carrier System Layout:*** This data specifies the routing, and EFAs (equipment and facility assignments) for each T-Carrier System in the network.

(3) ***T-Carrier System Patch Line Layout:*** This data specifies the routing and span layout for each patch line in the network.

(4) ***Repeater DSX (Digital Cross-Connects):*** This data specifies the repeater DSXs.

(b) ***Telemetry Assignments:*** This data consists of the following items:

(1) ***Telemetry Network:*** This data specifies telemetry network remotes and their associated data facilities.

(2) ***Telemetry Assignments:*** This data specifies the assignment of various equipment alarms to E-telemetry status points, and various switching functions to E-telemetry switch points.

(c) ***Administrative Assignments:*** This data consists of the following items:

(1) ***Corporate Structure:*** This data defines the user's organization for administrative report purposes.

(2) ***Network Portions:*** This data segments the T-carrier network into smaller network portions for the purpose of distributing trouble cases to specific MC or MAC positions.

INFORMATION SOURCES

2.09 The TCAS requires an extensive data base which comes from the following sources:

(a) T-carrier data from SLR (system layout records) and/or I/A (inventory/assignment) records maintained by the CPC (circuit provision center)

(b) Telemetry data from central office records

(c) Administrative data from user information.

2.10 The T-carrier data will constitute the bulk of the data base information. The following information is required from the SLR cards and I/A records:

(a) Terminal locations

(b) Equipment types

(c) Repeater locations

(d) Cable, case, socket, and side information for each span of a system

(e) Cable, case, socket, and side information for each span of a patch line

(f) DSX assignments.

2.11 The telemetry data originates from the line engineer as a part of the engineering of the TCAS equipment in the local central office. The scan point assignment information may be generated by

the line engineer, if direct cabled, or by the SCCS, if user provided cross-connections are used.

2.12 Administrative data for corporate structure and network portion specifications will originate within the FMAC-M.

DATA ENTRY

2.13 Data may be transcribed from source documents and recorded on magnetic tape (following specific format rules) for bulk input, or entered directly via CDT data base masks. If the CDT data base masks are to be used to enter the telemetry and administrative data, the DBC position must be used. Also, the T-carrier network data (office identifications, cable identifications, and alias definitions) must be entered from the DBC.

2.14 If the CDT data base masks are to be used to enter the T-carrier data, two different methods are provided. One is referred to as the SLR method which uses the SLR card as the data source, and the other is referred to as the EFA which uses the I/A record as the data source.

2.15 The EFA and SLR methods of entering T-carrier data cannot be interchangeably used for T1 and T1C Systems. The following are the basic restrictions for the use of the EFA and SLR methods:

(a) If the EFA method is used to enter T-carrier data for the initial data base load, and the SLR method is used to provide on-going data base updating, the EFA method must be discontinued.

(b) If the EFA method is used to enter T-carrier data for the initial data base load and the on-going data base updating, the SLR method must never be used to enter T-carrier data except for the entry of high-capacity system data.

2.16 The SLR method must always be used for the entry of all T-carrier data for high-capacity systems (T2-, T3-, T3C-, and T4-level Systems), even if the EFA method is used for entering T1 and T1C data. The assignment of T1 Systems to channels derived from T1C Systems is done from the EFAC. The assignment of T1 and T1C Systems to channels derived from high-capacity systems is part of the overall EFA process but can only be performed by magnetic tape entries.

2.17 The data for the T-carrier, telemetry, and administrative categories can be added, changed, or deleted by using the magnetic tape or DBC method of input. If the EFA method is used for T-carrier data, the magnetic tape or EFAC data base masks method of input should be used.

A. SLR Method

2.18 The SLR method requires the following data:

(a) System identification and control office

(b) Terminal bank location and type

(c) Location of each central office repeater on each span

(d) Cable and pair identity for each span and patch line in each direction

(e) Apparatus case, socket, and side assignment for each span and patch line in each direction

(f) DSX information, if provided.

2.19 Using the SLR method, the entered information must be complete for each system or the system data will be rejected by the TCAS. The systems can be incrementally added to the data base as monitoring arrangements are initialized in the remote offices. Changes must be made on a per system basis.

B. EFA Method

2.20 The EFA method uses the I/A records as the basic source information. The following is the basic information required:

(a) A list of controlled systems

(b) Terminal equipment locations and the associated system identification

(c) Span records which include the central office repeater location, cable identification, apparatus case, socket, side, and the associated system identification

(d) DSX locations and the associated identifications.

2.21 Using the EFA method, the entered data is stored in an EFA data base. When all the system data is complete, the data is transferred automatically to the SLR or working file. Most of the inventory data must be complete for all offices before a substantial number of systems can be transferred to the working file.

2.22 The EFA method utilizes the I/A records of the CPC. The use of the records provides the following advantages over the SLR method:

(a) The I/A records are always maintained by the CPC, even if the SLR cards are not issued.

(b) The I/A record formats offer significant transcription advantages for entry via either magnetic-tape or EFAC data base masks.

(c) The same EFAC data masks can be used for all on-going activities associated with additions, disconnects, and changes to the T-carrier data.

DATA ERRORS

2.23 All input data entered via magnetic tape or data base masks are extensively tested according to a specific set of requirements. If errors are detected, the data is rejected with no resulting effect on the working data base files.

2.24 The **/IN:DATA,ERROR** input command, used at the DBC or EFAC, places rejected data into an error file for report purposes. Various types of error reports are available for the analysis and resolution of problems. In addition, supplementary data base reports are available to help resolve inconsistencies in the data that may not be detected in the entry tests.

DATA BASE ADMINISTRATION

2.25 The initial implementation and on-going maintenance of a TCAS data base is a very large effort and should be properly planned for well in advance of the computer installation. The initial load of a complete data base for a large metropolitan area may require a person year or more of effort. Once the initial load is complete, a continuing effort of perhaps several persons days per week is required to keep the data base current. These activities will require cooperation and participation from several groups in the user's organization, most notably the FMAC-M, CPC, and central office engineering organizations.

2.26 The FMAC-M is the organization with prime responsibility for implementing and maintaining the data base. They should establish the proper techniques and procedures to insure that the initial load is successful and to insure that the data base is kept current as changes occur in the network.

DATA BASE AUDIT

2.27 ▶The data base audit program will perform the following functions:

(a) Trace and examine each of the 44 TCAS linked lists in both forward and backward directions

(b) Examine files sequentially and check for validity of pointers and indices

(c) Produce a list of discrepancies.

2.28 The program runs as automatic tasks (Tasks 119 and 120) that can be scheduled to daily and weekly. It can also be run on demand using a command from the SC (supervisory controller). The running of the tasks provides a Data Base Audit Results Report (R098)◀

3. DATA REQUIREMENTS

3.01 One of the most important aspects of providing data base information for TCAS is to have a thorough understanding of the various requirements that pertain to each type of data. The term "requirements" is used here in a very specific way and refers to the following attributes of the data:

(1) Required or optional

(2) Fixed or variable code

(3) Previous entry requirements

(4) Uniqueness

(5) Data groupings.

REQUIREMENT TABLES

3.02 Data requirements should not be confused with data record formats which pertain to

data entry via magnetic tape. For convenience, however, these two aspects are combined in tabular specifications given as DRTs (Data Requirement Tables) 01 through 99 (Figs. 2 through 61). Table A provides a listing of DRTs by data base categories. It is essential to understand these tables even if magnetic tape input methods are never used since the data requirements are independent of the method of input.

3.03 At the present time, there are 60 DRTs used to specify all TCAS data requirements. The DRT numbers assigned fall into logical groupings with missing number sets reserved for future TCAS applications. An individual table usually contains the requirements for more than one data item. For example, the primary piece of data specified by DRT 25 is the office identification; however, other subordinate data items such as the foreign office flag are also contained in this DRT.

3.04 For each DRT, the first column specifies a data item number for convenient reference, while the second column specifies the data item. In general, an item may consist of a qualifying label prefix followed by a hyphen and the generic item name. For example, item 5 on DRT 50 is the SYS CONT-OFF ID.

3.05 The four right-hand columns give the specific data requirements for each of the data items. These columns are each described below:

(a) **RQD** column specifies whether the data item is required. In some cases, the entire set of data associated with a DRT may not be required. For this case, the designation "optional" is included in the table title. The following are the requirement specifications:

(1) **Y** indicates a legitimate value must be present

(2) **N** indicates the value is optional (may be left blank).

(b) **CDE** column specifies the following item code (spelling) requirements:

(1) **F** indicates a fixed code as specified in the TCAS code catalog is required

(2) **V** indicates a variable (general alphanumeric) code is an acceptable subject only to the maximum character length specified in the TCAS code catalog (and provided for convenience in the column labeled CHR)

(3) **P** indicates the code must have been previously defined by the prior entry of the basic data item name as specified in the DRT given by the suffix digits.

(c) **PDS** identifies an item string which must have been previously defined by the entry of the item string data as specified in the table given by the suffix digits.

(d) **DAT** identifies an item string on which a duplicate assignment test is performed. The string, which is typically an equipment identification or circuit order number, must be unique.

3.06 The use of the DRTs is best explained by several very specific examples of data requirements as given below:

(a) The FOREIGN OFF FLG (item 3 in DRT 25) is a required item which must conform to a fixed code as specified in the TCAS code catalog. The code catalog specifies a Y (Yes) or N (No) as the only acceptable code values.

(b) The SYS TERM-BAY (item 7 in DRT 54) is a required item which can have a variable code of up to ten characters. An example would be RR101.14. In addition, this item is part of a string which is tested for uniqueness. The uniqueness requirement basically states that in that particular office (specified by item 6) the SYS TERM BAY (further specified by items 8 and 9) can be entered into the data base only once; that is, it cannot be assigned to two different systems.

(c) The set of data specified by DRT 52 is not required by TCAS. However, if an entry is made for this set of data then the CKT ORD NO is a required item that need only conform to a variable format with a maximum length of 18 characters. Although a fixed format is not required, there is a recommended format given in the code catalog. Note that the EFF DATE (effective or completion date) is not a required item; however, if it is included it must conform to a fixed format. The code catalog specifies an eight-character field with hyphen separators, such as 07-01-77.

3.07 When an item is specified in the DRTs as requiring a fixed code, then the code must conform precisely with that specified in the code catalog. For variable coded items the code catalog usually recommends a common language code. The TCAS fully supports and recommends common language codes, but does not require them. A variable coded item, in general, need only conform to a maximum number of characters as specified in the tables.

3.08 Each variable coded item in the DRTs is listed in the Code Catalog Cross-Reference Table (Table C) with the exact same abbreviated spelling as used in the DRTs for convenient reference.

3.09 It is absolutely essential that the detailed data requirements contained in the DRTs and the TCAS code catalog be thoroughly understood and precisely followed for a successful data base implementation.

CODE CATALOG

A. General

3.10 The TCAS code catalog provides coding standards which are intended to be used to encode all information that is:

(a) Communicated to or from personnel via keyboards, CDTs or printers,

(b) Communicated to other automated systems via data links or magnetic tape,

(c) Stored in the data base.

3.11 The basic code unit in TCAS is an item. Items are defined for TCAS to identify office identification, facility type, E2 display type, etc.

3.12 Two types of codes are used for each item. A character code is used for communication between the TCAS computer and the FMAC-M personnel or other automatic systems. A compact code is used to store information in the computer or its storage media. Both codes are provided for each item.

3.13 The character codes fall into two categories, variable and fixed character codes, depending upon the data type.

3.14 Variable character codes are used for those items whose values would intrinsically be variable; for example, offices, remote names, bay locations, etc. However, fixed codes are used for items whose values should basically be drawn from a closed set of codes; for example, display types, signal levels, etc. Character codes are the only type of code that should concern the user. The TCAS handles all compact code usage without user specifications.

3.15 The code catalog provides the following information:

(a) ***Item number:*** The following are the item assigned number ranges:

(1) 101-199 Location

(2) 201-299 System and Facility

(3) 301-399 Transmission Equipment

(4) 401-499 T-Carrier Administration System Equipment

(5) 501-599 E-Telemetry Equipment

(6) 601-699 Date and Time

(7) 701-799 Administration

(8) 801-899 Company Organization

(9) 901-999 Miscellaneous

(b) Item name

(c) Item name abbreviation

(d) Item description

(e) Item character code.

3.16 Table C provides a cross-reference of DRT item name abbreviations to DRT code catalog item numbers and Table D provides the code catalog.

B. Character Codes

3.17 The character code for an item specifies the character strings that can represent that item. For either variable or fixed character codes, the

character strings shall conform to the following general rules:

(a) Character codes shall not be longer than the maximum length

(b) Character codes shall not be shorter than the minimum length specified

(c) Character codes shall contain only the letters A to Z, the numerals 0 to 9, and the special characters period (.), plus (+), and minus (-).

(d) Leading and trailing blanks are allowable in character codes but are not significant.

(e) Leading zeros are allowable in character codes but are not significant, except for the last zero in an all zero code. For example, the codes **1A, 01A, 001A** are all considered equivalent, but the codes **0.2B, 0.02B, 0.002B** are considered distinct. The character codes will be used for all communication between the TCAS computer and the FMAC-M personnel and for all communication between the TCAS and other automated systems whether via magnetic tape, data link, or other media. Where convenient, the character codes can be used for internal storage in the computer or its storage media.

3.18 ***Variable Character Codes:*** Variable character codes, such as that for office identification, serve only to uniquely identify entities. For these codes, the particular characters are unimportant. These character codes need follow only the general rules given in paragraph 3.14. Where a common language code or other standard code is available, it is recommended, but not required. The user may use whatever codes it chooses for variable character codes. The user may even desire to allow more than one character code (i.e., aliases) for a given item in order to facilitate the conversion of manual records. This degree of flexibility should ease the task of providing TCAS data base inputs.

3.19 One word of caution applies in those cases where the user uses a nonstandard code for an item used in the identification of a piece of equipment. Care must be taken that the same codes are used in the circuit layout information and in the telemetry installation information. Normally, this will not be a problem since the identification used on the circuit layout records are those established at the time the equipment is installed. In cases where there may be a difference in coding, it is the responsibility of the user to specify the nonstandard codes used. Failure to comply with this requirement will result in a failure of the TCAS computer to properly correlate telemetry and circuit layout information.

3.20 ***Fixed Character Codes:*** Fixed character codes, such as that for T1 manhole repeater side, serve not only to identify entities, but also carry specific information in the coding that the computer requires for processing.

3.21 The character codes for fixed code items include the specific codes to be used. No variations are allowed from these codes except those provided by the general rules in paragraph 3.14.

C. Self-Checking Codes

3.22 The self-checking codes used for trouble case number and some other items are of the following form:

$$C_6\ C_5\ C_4\ C_3\ C_2\ C_1$$

where:

C_6 to c_1 = dedimal digits

$$\text{Mod}_{11}\ [W_0 + \sum_{1}^{6} W_i\ C_i] = 0$$

W_6 to W_1 = 10, 5, 8, 4, 2, 1

W_0 = constant for given item, $0 \leq W_0 \leq 10$.

The above codes have the following properties:

(a) There is a unique code set for each W_0

(b) Single digit errors are detectable

(c) Two digit transposition errors are detectable.

3.23 ***Converting to Character Code:*** To convert from N between 1 and 32767 to a self-checking number of weight W_0, proceed as follows:

Let:

$n_6\ n_5\ n_4\ n_3\ n_2$

be a five digit number equal to

$2N + 10000$

and compute

C_6 to c_1 = decimal digits

$$t + Mod_{11} = [11 - Mod_{11} \mid W_0 + \sum_{2}^{6} W_i\ n_i]$$

If t = 0 to 9,

$C_1 = t$

$C_i = n_i$ for i = 2 to 6

If t = 10

$C_1 = 8$

$C_2 = n_2 + 1$

$C_i = n_i$ for i = 3 to 6

HIERARCHICAL ENTRY REQUIREMENTS

3.24 Contained within the DRTs, are detailed specifications as to whether individual item names or item strings must have been previously specified by a prior entry. A summary overview of these specifications, referred to as the hierarchical entry requirements, are contained in Fig. 62. The hierarchical requirements are important to understand for two reasons discussed separately in paragraphs 3.25, 3.26, and 3.27.

3.25 First, the T-carrier network entries are required for purposes of verifying the accuracy of subsequently entered detailed data. For example, office names will appear tens of thousands of times on input of all data, yet the TCAS area may only include 100 legitimate office names. Prior input of these legitimate names can obviously be used to reject subsequent erroneous data.

3.26 Because of the special use of the T-carrier network data at the top of the hierarchy, it is important that special care be exercised in preparing and entering this data.

3.27 The second important aspect of the hierarchical requirements is that deletion of data base information requires following the exact inverse order used for additions. For example, an office cannot be deleted from the data base until all subordinate data has been deleted.

DATA GROUPING REQUIREMENTS

3.28 One basic data grouping requirement is that the set of data "items" specified in any of the tables must be entered as a set of data. For example, the FOREIGN OFF FLG, REPT DALY FLG, REPT WKLY FLG, and the ACO PMT'D FLG are entered as a set of data associated with the OFF ID entry on the office identification DRT 25. Another example would be on DRT 52 where the CKT ORD NO, EFF-DATE, and ISS NO are an associated set of SLR circuit order data. The entry technique would consist of providing the set of related data on one 80-character record on magnetic tape or usually one line on a CDT mask.

3.29 For the most part, each set of data specified by a particular table is independent and need not be further grouped except for the hierarchical entry requirements. There are two important exceptions to this. For T-Carrier Systems (and patch lines), the set of data that describes the system layout from end-to-end must be entered as a complete group of data. Partial system layout information, except for the omission of certain optional data, will not be accepted by TCAS. The entry technique consists of providing the T-carrier data specified by either DRTs 50 through 69, DF, and 82 (Fig. 33 through 51) for the SLR method, or DRTs 90 through 99 (Fig. 52 through 61) for the EFA method as a combined and ordered set of data records for magnetic-tape entry or via a system layout mask for the CDT.

4. DATA ENTRY

GENERAL

4.01 Data entry can be entered in the following manner:

(a) ***T-Carrier Network Data:*** Enter data via magnetic tape using DRTs format, and/or enter data via the DBC using the data base masks

(b) ***T-Carrier Data:*** Enter via magnetic tape using DRTs format, and/or if using the SLR method, enter data via the DBC using data base masks, and/or if using the EFA method, enter data via the EFAC using the EFA data base masks.

(c) ***Telemetry Data:*** Enter data via magnetic tape using DRTs format, and/or enter data via the DBC using the data base masks

(d) ***Administrative Data:*** Enter data via magnetic tape using DRT format, and/or enter data via the DBC using the data base masks.

MAGNETIC TAPE

4.02 The DRTs used for magnetic tape entry are listed in Table A by data type category.

4.03 The magnetic tape must contain specific requirements. The following listing of tables show these requirements:

(a) Magnetic tape - Table E

(b) Volume header label - Table F

(c) File header label - Table G

(d) File trailer label - Table H.

4.04 Preparation of data for entry via magnetic tape is discussed in detail in Practice 865-201-104. In general, the data is transcribed from source documents onto coding forms as precisely formatted 80-character records, keypunched onto cards, and put on magnetic tape in data blocks containing 25 such records. In addition, the tape must contain a header label properly identifying it as a data base tape for a specific TCAS location.

4.05 The specific format for each type of data record is conveniently included in the DRTs by the simple addition of processing control information, and the column labeled POS which precisely identifies the character position for the beginning of each data item field in the record. The processing control information includes a one-character DA BS ACTN CD followed by a fixed two-character RCD NO. The data base action code specifies whether the input is an A (add), D (delete), or C (change) operation. The record number directly corresponds to the table suffix number and conveniently identifies the type of data being input so that specific data items can be identified by their known field locations within each record type. For example, a Record 25 will contain an office identification and the set of related data specified in DRT 25.

4.06 Note from the DRTs that each magnetic-tape record is divided into either three or four major parts. The first part consists of the processing control information just described. The second part of each record contains the "primary key" information. This is the designation under which the record data is filed in TCAS. For example, the OFF ID is the primary key which locates a specific office record in the TCAS office file. Also contained in that record would be the various flags that were entered as defined in DRT 25.

4.07 For those DRTs in the 50 and 60 series which are divided into four parts, the third part contains the "secondary key" data. An example would be DRT 54 where the primary key identifies the system and the secondary key (items 5 and 6) specifies whether a particular Record 54 is for the A or Z end of the system. This allows the two D-banks to be separately identified on input and appropriately filed within the system record.

4.08 The last part of each table specifies the "data" that is associated with the record key. Examples would be the various flags specified in DRT 25 and the D-bank identification specified in DRT 54.

4.09 Figure 63 shows a sample of data records in magnetic-tape format. Individual items are shown with left-field justification, although this is not a requirement. The items, of course, must fall within the proper field boundaries as specified by the POS and CHR columns in the tables.

4.10 The concept of primary and secondary keys was previously described in conjunction with the way data is identified on input records and actually filed within TCAS. There are two other considerations related to keys which are important to understand which are described in paragraphs 4.11 and 4.12.

4.11 First, as previously discussed, the data base input for a T-Carrier System (or patch line) consists of a group of contiguous and ordered records that describe the complete layout of the system. An

example of magnetic tape records for a two-span system is given in Fig. 64. The inclusion of the primary key on each record allows the associated group of records to be identified while the secondary keys identify specific subsets of terminal and span line data within the group. This concept allows system data that does not precisely conform to the group completeness and group ordering requirements to be rejected as a group of erroneous data.

4.12 Second, "keys" have very important considerations for delete and change operations which are independent of whether the data is entered via magnetic-tape records, or via the DBC position or EFAC position. Delete and change operations are described in paragraphs 4.25 through 4.31.

4.13 A magnetic-tape data record change entry must contain a C (DA BS ACTN CD), followed by the RCD NO, key specification, and the new data. For example, C25XYABCDEF001YYYYTCASNXYABCDEF001 data entry would change the ACO PMTD FLG in the XYABCDEF001 office to an N.

4.14 A magnetic-tape data record deletion entry must contain a D (DA BS ACTN CD), followed by the RCD NO and the primary key. For example, the D25XYABCDEF1 data entry would delete the XYABCDEF1 office record.

4.15 The primary and secondary key data cannot be changed. For example, the ACO PMT'D FLG specified in DRT 25 can be originally entered as an N and later changed to a Y; however, the OFF ID cannot be changed. The change can only be accomplished by performing a delete, followed by an add for the new OFF ID.

4.16 The inclusion of the primary and secondary key information on all magnetic-tape records associated with T-Carrier System and patch line layout data allows individual data changes in those record groups to be made by the entry of a single data record. For example, if the terminal bank at the A end of a system is to be changed, a single record would be required which contained C54 (processing control) followed by the system identification (primary key), terminal end (secondary key), and the data (new D BK), all with the precise format and data requirements specified by DRT 54.

4.17 When a delete is entered, the record in TCAS, identified by the primary key, is entirely deleted. Hence, only the DA BS ACTN CD, RCD NO, and the primary key are required on the magnetic-tape deletion record.

4.18 For deletion and change entries, specific status conditions and hierarchical requirements will apply to the processing. For example, if a system is in a failed state, it cannot be deleted. A cable may not be deleted until all the systems and patch lines that reference that cable are first deleted.

DBC (DATA BASE CONTROLLER) POSITION

4.19 Detailed procedures for the operation of the DBC position, including all input commands, data base masks, and interactive operations are covered in Practice 190-200-310. In general, a particular type mask is requested by a specific input command, the data is transcribed from the source document onto the mask, and the data is directed into the TCAS data base by an **/IN: DATA** input command. In the event of an error, the data is redisplayed on the screen with the error flashing in intensity. The operator has an opportunity to edit and reenter the set of data, or to direct it to an error file for subsequent error report purposes.

4.20 Figures 65 through 114 show DBC add masks 01 through 82, and Table B is a listing of the data base masks by data type category. The first point to note about the masks is that they are user oriented and make extensive use of label fields. These attributes, combined with tabbing and protection of all nondata fields result in a high degree of input transcription accuracy.

4.21 In general, the mask numbers directly correspond to the magnetic-tape record numbers and the DRT numbers for individual data types. The parallelism between individual magnetic-tape records and lines on the CDT screen is obvious in most cases. For example, a line on Mask 25 contains the same information as a magnetic-tape DRT 25 previously described. Hence, for this particular mask, the data entry process is basically identical with the way data is transcribed onto coding forms for entry via magnetic tape, except that the CDT, of course, does offer the important advantages described in the paragraph 4.20.

4.22 For other types of data, however, the CDT masks offer additional advantages. For example, the entry of CGA ASGNMT data using Mask 02 would involve the following operations:

(a) The telemetry display for which assignments are to be made would be specified in the input command asking for the data base mask.

(b) When the mask is displayed, this data would be included in the mask header as **DISPLID** = ..., and the portion of the mask labeled telemetry display, word, and bit would be filled in by the computer in protected format at the time the mask is displayed.

(c) The data entry task would simply consist of entering the terminal location assignments as they appear on the assignment source document.

4.23 For T-Carrier System (or patch line) layout data, the entire set of data is entered into a single multiline (and usually multipage) mask. One difference between magnetic-tape records and the CDT mask is that the primary key is only entered once in the mask and most secondary key designations are automatically determined by the order of the data on the screen. These concepts combined with the protection of all nondata fields make many types of errors that can exist with magnetic-tape techniques impossible with the CDT.

4.24 Another very important advantage of the CDT method of entry is in the handling of data with errors. If an error is detected in the input data, the data is retained on the CDT screen with the specific data field in error flashing in intensity. If the error was simply due to a transcription mistake or the omission of required data, the operator has the opportunity to correct and reenter the data.

4.25 If the error cannot be corrected at that time, the entry may be directed to an error file. For the DBC position, the error file not only serves for error report purposes, but also allows the data to be retrieved onto the CDT mask for error editing at some later time after the error has been resolved. This is a very important capability for system layout data since only the individual item in error (such as a duplicate repeater assignment) needs to be changed rather than reentering the entire set of data.

4.26 A change in a data record can be performed by the use of a DBC mask. For example, if the ACO PMT'D FLG in the ABCDEFBD1 office is to be changed, the analogous change via the DBC position would consist of requesting a change mask specifically for the ABCDEFBD1 office. The mask would be similar to Mask 25 except that only one line of data specific to that office would be displayed. This line would show the data that presently exists in the data base and the operator would simply change the ACO PMT'D FLG from an N to a Y.

4.27 To perform a deletion entry, the analogous operation via the DBC position simply consists of an input command specifying the deletion of the office. No mask is required.

4.28 For changes to T-Carrier System and patch line data from the DBC position, all of the original system data is displayed in the mask at the time the mask is output by the computer. After the desired change is made, the data processing programs automatically pick out only the data that has been changed. Multiple data changes can also be made during the one mask operation.

4.29 When a delete operation is performed, the record in TCAS identified by the primary key and all the data contained in that record are deleted. Deletion of a T-Carrier System from the DBC position only involves a delete input command specifying the system identifications; a mask is not required.

4.30 Very specific status conditions must exist before certain entities can be deleted or changed. A typical example would be where a system could not be deleted if it is in a failed state.

4.31 Specific hierarchical requirements apply for both delete and change operations. For deletes, the exact inverse of the hierarchical order specified for additions must be adhered to. For example, a T-Carrier System may be deleted without any previous hierarchical requirements; however, a cable may usually not be deleted until all systems and patch lines that reference that cable are first deleted.

EFAC (EQUIPMENT AND FACILITIES ADMINISTRATION CONTROLLER) POSITION

4.32 Detailed procedures for the operation of the EFAC position, including all input commands, data base mask, and interactive operations are cov-

ered in Practice 190-200-311. The same exact masks used for initial loads can be used to update the data base. Masks 90 through 99 (Fig. 107 through 114) are used to enter EFA data.

4.33 The data is entered via EFAC masks which look like the CPC EFA documents from which the data will be transcribed. The masks consist of label fields (which are in protected format and cannot be overwritten) and data fields. When entering data, start entries with Mask 90 and then 91, followed by 92 through 99. Prior to these entries, data must have been previously entered on Masks 25 and 26 (Fig. 78 and 79) at the DBC.

4.34 The data must be entered from the top of the hierarchical chart (Fig. 62) to the bottom. For example, the cable and repeater span assignment must be entered prior to entering the system span assignments.

4.35 If there is a question as to what data format is required in a specific variable field, the code catalog can be referenced for the required information. Table C provides an index for referencing to the code catalog.

4.36 After the data has been successfully entered, it can be directed to the TCAS data base by the **/IN:DATA** input command.

4.37 The PXA (pending transaction administration) provides the ability of holding add, delete, and change assignments in the EFA files and then transferring this data to the data base after the work is completed and declared as IE (in effect).

4.38 The PXA inputs are entered at the top four lines of the EFAC position screen. The input command area is not part of the designated area used for displaying the masks.

4.39 The PXA provides updating capabilities in primary and secondary assignments. Primary assignments cover terminal units, span lines (slots), and derived channels on high-capacity systems. Secondary assignments cover system mileage, terminal DSX, office repeater, cable, repeater, case, side, and DSX-to-span assignments.

4.40 Each mask has option sets that can be used to make changes and deletions to the data base. The delete option has a restriction that specific hierarchical conditions be met in order to delete data base information (Fig. 62 shows the hierarchical order). The exact reverse hierarchic order must be followed. For example, the deletion of cable and repeater span assignment is not permitted if there is a system span assignment in the data base that is referenced from the cable and repeater span assignment.

CHOICE OF DATA ENTRY VIA DATA BASE MASKS OR MAGNETIC TAPE

4.41 The data base masks of the DBC and EFAC positions offer a number of advantages which are summarized as follows:

(a) The mask format is very easy to interpret and use in that it contains protected label fields and has well organized and spaced data fields.

(b) Transcription of data from source documents is assisted by concepts such as tabbing and automated handling of known data.

(c) Numerous categories of magnetic-tape type errors, such as key consistency, record group ordering, and data field placement cannot exist with the masks.

(d) Immediate feedback is provided for detectable type errors with an opportunity to edit on line, and data recall is available for later editing.

(e) For change operations, all associated data, including the data to be changed, is displayed, substantially reducing the opportunity for error.

4.42 In addition to these advantages, the data base masks provide a complete in-house operation where the FMAC-M does not have to establish technical and administrative arrangements to have tapes prepared. This consideration alone makes the data base masks the obvious choice for all data base transactions involving low volume data, such as office, cable and remote identifications, and changeable data such as corporate structure and network portion definitions.

4.43 For telemetry assignment data, the data base masks offer a unique advantage. When a particular display mask is requested, the computer prefills the display's word and bit data (or group, subgroup, and switch point for switches) so that the

user need only enter the equipment identification associated with each telemetry assignment point. This advantage, when combined with those previously listed, makes the data base masks a viable choice for also handling the initial load of telemetry assignment information even though the data may consist of 10,000 or more entries.

4.44 The term viable was used in that the magnetic-tape technique is also a viable method of handling the initial load for telemetry data. The main reason for this is that the source data is conveniently arranged on assignment drawings for direct and efficient keypunching.

4.45 The choice between the data base masks and magnetic tape for the initial load of telemetry assignment data basically depends on how the TCAS telemetry remote installations are scheduled. If all remotes are installed and checked out prior to the computer installation, the magnetic-tape method should be chosen so that all data can be efficiently entered as one bulk input. If the remotes are scheduled for completion on a phased basis, for example, one month following the computer installation, then the data base masks would appear to be the best method for entering telemetry assignment data rather than preparing a separate tape for each remote.

4.46 The major question involving the use of the DBC position versus magnetic-tape techniques, however, evolves around the T-carrier data. This is by far the great bulk of data that needs to be handled and represents between 80 to 90 percent of all input.

4.47 The magnetic tape for the initial load can be prepared in advance of TCAS installation for rapid bulk processing. The entire initial load would only require several days of processing time after the TCAS central was installed. The **major problem** with this approach, however, is that the data as it appears on the SLR cards and/or I/A records does **not** readily lend itself to direct keypunching. Because of this, an intermediate step has been used in practical situations to transcribe the data from SLRs and/or I/A records onto coding forms for keypunching. This single transcription step has been shown to take longer and be more error prone than direct entry via data base masks.

4.48 In addition to the transcription problem, since the objective is to prepare all of the data in advance of the central installation, the individual preparing the data cannot receive any feedback on the quality of the work as would be with the data base masks. As a result, experience has shown that a great deal of data can be prepared with mistakes or major conceptual errors due to a lack of understanding of the data requirements.

4.49 Off-line edit programs have been made available to modify magnetic-tape data which is incorrectly prepared. However, individual correction cards must be keypunched and corrections must be made on a system-by-system and record-by-record basis. In addition to specific individual data errors, experience has also shown that conceptual problems can occur in the data preparation which affect hundreds or thousands of systems and that the only viable way to correct these problems is to write a number of custom utility programs. In addition, all individual error corrections and utility programs must be run on vendor computers.

4.50 These problems with magnetic-tape techniques have led to the concept of using the data base masks for the initial load of SLR and/or I/A records data. Hence, the major question regarding the data base masks is whether the large quantities of SLR and/or I/A records data associated with an initial load can be handled in a reasonable time frame.

4.51 The data base masks are very viable for a phased remote installation program such as discussed above where the systems terminating in the initial remote offices would be entered first. The entire data base for a TCAS area with 4000 T-Carrier Systems could be completed in about 6 months. This approach should be given serious consideration by the user.

4.52 The data base masks should definitely be used for all data base update operations involving additions, deletions, and changes that occur to the network following the initial load.

5. DETAILED DESCRIPTIONS OF INPUT DATA

T-CARRIER NETWORK DATA

5.01 The T-carrier network data identifies all offices and cables that exist in the network. The

network data is required as an input prior to the entry of any detailed system layout data as shown in the hierarchical chart (Fig. 62). The following is the purpose of this data:

(a) It establishes allowable codes for offices and cables for the purpose of verifying references to those entities in subsequent entries of SLR and/or I/A records data.

(b) It provides a framework in which network performance statistics may be summarized and reported.

5.02 Since the data is used for subsequent verification purposes, it is important that it be prepared and entered with special care. Also, in order to perform effective verification, it is important that the data be prepared independent of SLR and/or I/A data. The objective is not to see that all SLR and/or I/A record data is accepted, but rather, that only accurate data is accepted.

5.03 In addition to offices and cables, information is also provided for establishing alternate codes (aliases) for item designations that might exist in outdated records.

A. Office Identification

5.04 Each legitimate office identification that may appear in SLRs and/or I/A records must be uniquely established according to the data requirements given in DRT 25. The term "legitimate" as used here must be clarified. If the office name has recently been changed, then some SLR and/or I/A records will contain the new name while older SLRs and I/A records may contain the old name. Both of the names are not legitimate; only the new name is legitimate. The fact that the older name exists is simply because the CPC has not had time to change all of the affected records. If both names were allowed into TCAS, the system would think these are physically different offices which would diminish the effectiveness of patterning and reports.

5.05 From a simplistic viewpoint, it would appear that a network containing 50 physical offices would require only 50 office record entries. However, TCAS permits the following different legitimate office identifications:

(a) System or span terminal offices

(b) System control offices

(c) Span control offices

(d) Office designations in the systems identification.

5.06 In some organizations, the same office identification, such as ABCDEFBD, would be used for all those previously mentioned office identifications and would require only a single office record entry. However, it is permitted to use identifications such as ABCDEFBD for the system and span terminal office, ABCDEFBDF11 as the designation in the system identification, and ABCDEFBDE01 as the system control office. For this example, three independent office entries would be required for each physical office.

5.07 In addition to the office identification, the following data is provided with each office identification entry:

(a) A specification as to whether the office is local or foreign. Foreign office designations apply to those offices which may appear in SLRs or I/A records as either system or span terminal offices, but which actually reside outside the user's area of responsibility. For T-carrier data, the data input requires identification of D-bank and office repeaters at local offices. This entry requirement is waived for foreign offices since the CPC may not actually have knowledge of this data.

(b) The intervals at which statistical reports are to be generated. The purpose of these reports are to provide the office with detailed T-carrier failure and patch line utilization data. Daily and weekly intervals may be specified.

(c) An ACO (alarm cutoff) permitted flag which indicates whether alarm cutoff operation is allowed for that office. (This flag is an optional item.)

5.08 The CPC, which maintains SLR, I/A records, and span records, is in the best position to provide a complete and compatible list of office identifications and to indicate whether they are local or foreign. The FMAC-M should provide information for the report interval and ACO permitted flags.

5.09 The specific magnetic-tape formats for office identification records are given in DRT 25 (Fig. 15). A sample record for adding an office would be **A25ABCDEFBDNYYYYYTCAS.**

5.10 The DBC mask for adding office identification data is Mask 25 (Fig. 78). The mask accommodates up to 14 separate entries. The previous sample entry is included in the mask.

B. Alias Codes

5.11 The alias codes may be defined for any data base item according to the requirements in DRT 27 (Fig. 17). One of the primary uses of aliases would be to assist in the entry and conversion of SLR or I/A record data that contains obsolete office codes. An example would be where SLRs issued prior to 1970 contain office designations such as ABCDEFBDOLD, while those issued after 1970 contain ABCDEFBDNEW. The establishment of an alias code, as specified by DRT 27, would allow the obsolete designations to be used on input. The designations would be converted in TCAS and on all subsequent output to the new or PRIME code.

5.12 Another use of aliases is to allow abbreviated designations to be used on input while the prime or full name would appear on all output. For example, aliases could allow a MC position to specify a system identification in an input request using simple two-letter aliases for the office identifications.

5.13 Preparation of a list of office aliases to allow entry of obsolete SLR or I/A record designations would be the responsibility of the CPC. Aliases to allow abbreviated entries could be the responsibility of the FMAC-M or the CPC.

5.14 The specific magnetic-tape formats for alias definition records are given in DRT 27. The ITEM NO (Item 1 in DRT 27) for all type data items are found in the TCAS code catalog. Two examples of office aliases for the uses just discussed are given as follows:

A27101ABCDEFBDOLDABCDEFBDNEW

A27101BD ABCDEF

5.15 The DBC mask for adding alias definition is Mask 27 (Fig. 80). The mask accommodates from 1 to 10 separate entries.

C. Cables

5.16 Each cable in the T-carrier network that appears in SLRs and/or I/A records must be uniquely identified according to the data requirements given in DRT 26 (Fig. 16). Generally, a cable is a sheath (or group of sheaths having a common designation) between two offices. A cable is identified by a transmitting office, receiving office, and cable designation. The identification also indicates the direction of transmission as being from the transmitting to the receiving office. For single cable T-carrier operation, each direction of transmission must be identified as a distinct cable by a separate cable record entry.

5.17 In addition to the cable identification, the span control office, which is responsible for service restoration of failed span lines in the cable, must be specified. The span designation is an optional item which can be used to identify a specific group of cables (such as those along the same route) or all cables between two offices. For example, span 14 may contain cables 101, 102, and 103.

5.18 The CPC, which maintains SLRs, I/A records, and span records, is in the best position to provide the required data.

5.19 The specific magnetic-tape format for cable identification is DRT 26 (Fig. 16). Sample records for single cable operation are given as follows:

A26ABCDEFBD1 ABCDEFBD2 101 ABCDEFBD2 14

A26ABCDEFBD2 ABCDEFBD1 101 ABCDEFBD1 14

5.20 The DBC mask 26 (Fig. 79) accommodates up to eight separate entries.

T-CARRIER DATA

A. SLR (System Layout Record) Method

5.21 The SLR method for entering T-carrier data is divided into the following three parts:

(a) System and span layout

(b) Patch line and span layout

(c) Repeater DSX assignments.

5.22 The TCAS requires complete system layout data for each system in the network for which the FMAC-M has responsibility. This will always include all monitored systems and will typically include all systems in the network.

5.23 Detailed requirements for SLR data are contained in DRTs 50 to 59 (Fig. 33 to 42), 60 to 69 (Fig. 44 to 50), DF (Fig. 43), and 82 (Fig. 51). The minimum set of data required for each system includes the system identification, system control office, and all D-bank, office repeater, cable and manhole repeater identifications. Certain other data contained in DRTs is optionally accommodated.

5.24 Sample data for a two-span system is given in the block diagram illustration of Fig. 115. The system terminal offices are designated SYS TERM A and SYS TERM Z. They arbitrarily establish the AZ direction of transmission. The system contains a series of bidirectional span lines which are cross-connected at intermediate offices. The span terminal offices for a particular span are designated as SPN TERM A and SPN TERM Z in accordance with the AZ direction of transmission for the system.

5.25 The equipment identifications are given in an abbreviated format for simplicity. For example, the D-bank in the ABCDA01 office is in bay 253.06, unit number 57. The first span office repeater in ABCDA01 is located in bay 237.44, shelf 6, position 1, and side 2. The cable designation for the first span is 504 (for each direction) while the manhole repeater string is located in apparatus case 1, socket 14, side 1 in the AZ direction and side 2 in the ZA direction.

5.26 The system layout data for this system is also shown recorded on a typical SLR card in Fig. 116. The system identification and system control office are recorded on line A. The system terminal offices and D-bank identifications are recorded on line C. Span line data is recorded on lines E through T.

5.27 There are a number of different type SLR cards used. This particular card has several items that require careful interpretation. First, the apparatus case identification is recorded in the column labeled SPAN, while the socket and side are in the column labeled CASE SKT. Second, the office repeater identification data recorded under the heading SPAN TERMINATION is completely redundant on the left and right side of the card as far as the TCAS requirements are concerned. An office repeater is a bidirectional device and need not be specified twice for input and output.

5.28 In addition to the required SLR data, the SLR card contains the following information that may be optionally input to TCAS. Cable pair data is recorded next to the CABLE designation. Administrative data recorded on line B and the last line of the card. Bank terminating assembly identifications for the system terminal offices recorded on line C. The SLR of Fig. 116 does not explicitly provide for recording DSX data; however, terminal DSX 1 identifications are usually entered in the BTA field, and office repeater DSX 1 identification are usually entered in the span termination column.

5.29 All system layout data associated with a particular system are required to be input as a contiguous and ordered group of data records. The order in which the data is to be entered is defined by Fig. 117. (Patch line records are added in the same order, excluding the system terminal records.) The order generally corresponds to the order in which data is recorded on SLRs. Note that certain records are optional; if this type of data is not provided, the entire record must be omitted.

5.30 The following additional rules are to be observed in preparing the data:

(a) The system identification is recorded on every record in the group. The primary reason for this requirement is that changes may be performed on an individual basis via the same record format.

(b) The D-bank data must be provided in AZ order. The system terminal is identified by an explicit specification of the end and office code. If bank terminating assembly or DSX 1 locations are provided, the end and office location must match that specified in the D-bank record.

(c) Each span line is identified by span terminal A and Z office codes corresponding to the AZ direction of transmission established by the system terminal records. The span line identification is recorded in each record in the span line subgroup. The end and direction codes are relative to the span terminal offices and must be entered in the specified order.

5.31 Figure 63 contains the complete set of magnetic-tape data records required for the example system illustrated in Fig. 115. It is essential to understand the relationships between the data shown in Fig. 115, 116, 117, and Mask 50 (Fig. 96) before attempting to enter the T-Carrier System data base information.

5.32 The TCAS requires complete patch line and span layout data for each patch line to be used for maintenance purposes in the network.

5.33 Detailed requirements for SLR patch line data are contained in DRTs 60 to 69 (Fig. 44 to 50). The required data for each patch line includes the control office, patch line identification, office repeater, cable and manhole repeater identifications, and DSX termination locations.

5.34 The entering of patch line and span layout data is similar to the entering of system and span layout data.

5.35 If existing T-carrier data has been entered to the data base, but at the time there was no DSXs and now there is a DSX, the DSX assignments can be bulk loaded by using DRT 82 (Fig. 51) or Mask 82 (Fig. 106). This permits the entering of DSX assignments without having to erase previously entered information.

B. T-Carrier Data (EFA Method)

5.36 The EFA method of entering T-carrier data uses the CPC I/A records as the source data. The data is entered into the data base using DRTs via magnetic tape and/or data base masks via the EFAC position. The EFA method permits data to be entered in a bulk form.

5.37 The typical types of I/A records used to provide data for EFA method entry are shown in Fig. 118 and 119. The I/A data for a single T-Carrier System will be typically contained on a dozen or so documents for each terminal office, intermediate office span, etc.

5.38 The data is entered using formats provided in DRTs 90 through 99 (Fig. 52 through 61) and Masks 90 through 99 (Fig. 107 through 114). The process is actually performed in two steps. The first step specifies the inventory of terminal equipment and span facilities that exist in the network; while the second step specifies the system to terminal and system to span line assignments. The add, change, and delete operations are performed using the same masks.

5.39 The EFA masks are relatively straightforward in appearance and use. They have a close resemblance to the I/A records maintained by the CPC. The data base information must be input in a logical order (see Fig. 62). The purpose for each level of entry to be in order is to validate or purify the data of the lower levels.

5.40 The user merely requests a specific mask in logical order and then fills in the blanks beside the field labels. Each mask is designed to hold multiple lines of input.

5.41 The PXA facilities are used for updating of the data base after the initial data base load. The PXA holds any current add, changes, or delete assignments in the EFA file and then transfers the data to the TCAS after the work is completed and declared IE.

TELEMETRY DATA

5.42 Telemetry data consists of telemetry network data that describes the telemetry remotes and their associated data facilities, and telemetry assignment data that specifies the assignment of telemetry status points to D-bank CGA (carrier group alarm), office repeater MLSI (maintenance line status indicator) and office repeater bay fuses, and the assignment of telemetry switch points to ACOs and RAUs (repeater access units).

A. Telemetry Network Data

5.43 Telemetry network data consists of parameters that describe the telemetry remotes and the associated data network. This data is required on a per remote basis so that the central can properly communicate with the remotes. Specific data requirements are given in DRT 28 (Fig. 18). Each of the data items in the DRT are discussed in the following paragraphs.

5.44 The remote identification must be a unique symbolic name. If there is only one remote unit in an office, the office identification can be used as the remote identification. For large offices which may require more than one remote unit, a suffix on

the office identification would be acceptable, e.g, ABCDEFBDRM2.

5.45 The office identification and relay rack bay number in which the remote unit is installed are also required. The code specified for the office must be the same as the code used to specify the office as a system or span terminal office in the system layout data. If the remote unit consists of more than one bay, then the first or basic remote bay should be specified.

5.46 Parameters 4 through 7 allow the central unit to properly communicate with each remote unit. In general, TCAS can have up to 128 E2/E2A remote units distributed over as many as 10 data networks. A TCT (telemetry-to-computer translator) provides the interface between the computer and a particular data network. For example, a TCAS installation may have 5 data networks (interfaced through TCT port numbers 1 to 5) each containing 6 to 8 remote units. Item 5 in DRT 28 is simply the TCT port number for the remote being described by the record 28 entry.

5.47 Items 6 and 7 specify the data network baud rate and whether the remote is an E2 or E2A type. In general, remote types should not be mixed on a data network. The E2 networks could have four networks operating at 600 baud and one E2A network operating at 1200 baud. A newer type E2A remote can be added to an E2 network; however, the record 28 entry for that remote must specify it as E2 and 600 baud.

5.48 Item 4 is the "remote address" and requires special interpretation. Each remote in a TCAS area can be given a unique "logical remote" number which is a decimal number in the range 1 to 128. In fact, this is the number which appears on office drawings for the new E2A remotes. However, for historical reasons associated with E2, the "remote address" must be input as an "octal + 1" designation derived as follows:

Logical Decimal 1 to 128

Decimal-1 0 to 127

3 digit octal 000 to 177

octal+1 111 to 288

5.49 A specific example would be E2A logical remote number 30 which equates to 29 on a 0-127 basis, 035 on an octal basis and 146 on an octal + 1 basis. Note that octal + 1 means + 1 in each of the 3 digits as defined here. The octal + 1 remote address must be computed in this manner for all E2A remotes. The octal + 1 address will usually appear directly on drawings for E2 remotes.

5.50 The remaining two items in DRT 28 specify hardware arrangements in the remote offices. The red monitored indication should be specified as Y if the channel bank red indications are wired to the remote in addition to CGAs (carrier group alarms). The DLM equipped flag should be specified as Y. A complete example entry in magnetic tape record format is given as follows:

A28ABCDEFBD ABCDEFBD 117.3 1461 1200E2AYY

5.51 The analogous entry via the DBC position is shown in Mask 28 (Fig. 81).

B. Telemetry Assignment Data

5.52 Telemetry assignment data consists of telemetry status assignments for CGAs, MLSIs, FUSEs frame alarm sets, equipment status, miscellaneous equipment status, miscellaneous alarm message, and user-defined alarm set message assignments, and switch point assignments for RAUs, and miscellaneous equipment switch points. The CGA and ACO assignment data originate on assignment drawing TF608-034, while FUSE and RAU assignment data originate on assignment drawing TF608-040 as a part of the job engineering for each office equipped with a remote. The final MLSI cross-connects are made by the user and the detailed assignment information is obtained from a form originated as a part of that function. Practice 865-201-111 gives a description of the various assignment forms.

5.53 In order to insure data base accuracy, the remote check-out procedure specified in Practice 365-330-200 must be performed prior to the entry of any status or switch assignment data recorded on the assignment drawings. ***Failure to perform this step can seriously effect the quality of TCAS.***

5.54 Detailed data requirements for CGA, MLSI, and FUSE status assignments are given in DRTs 02, 03, and 04 (Fig. 3,4, and 5), respectively. Data requirements for RAUs are given in DRTs 12

and 13 (Fig. 11 and 12) while ACO switch points are covered in DRT 14 (Fig. 13). Data requirements for miscellaneous equipment switch points are covered in DRT 15 (Fig. 14). The high-capacity frame alarm set, miscellaneous equipment status, miscellaneous alarm message, and user-defined alarm set message assignments data requirements are given in DRTs 05, 06, 07, and 08 (Fig. 6, 7, 8, and 9), respectively.

5.55 For each type of status or switch assignment data, a prerequisite data base input is required which specifies which status displays and which subgroups are valid for each telemetry remote. This concept is illustrated in the hierarchical chart of Fig. 62. These entries are used to compare the subsequent detailed assignment data for validation purposes. Data requirements for data base entries which validate status displays and switch subgroups are given in DRTs 01 and 11 (Fig. 2 and 10), respectively.

C. Telemetry Status Assignments

5.56 Before discussing specific examples, it is important to understand the organization of status assignment data in the telemetry remote. An E2 remote can monitor up to 4096 status indications. These are grouped for reporting purposes into 64 displays each containing 64 status points. A display, in turn, is divided into 4 words each containing 16 status assignment bits. Hence, a specific status assignment would be given in terms of a display, word, and bit.

5.57 All displays are not available for assignment purposes. Displays 1 through 4 are reserved for the telemetry system itself and display 6 must be reserved for DLM measurement results. The remaining displays can be used for telemetry status assignments. The E2A has the same organization except that it only has a total of 36 displays; 31 of which are assignable.

5.58 Sample CGA assignment data, as provided on TF608-034 forms for a particular remote, are given in Fig. 120 through 122. Table A in Fig. 120 provides an overview of the CGA display types that exist in that remote. The CGA displays are identified as types DAA, DAB, ..., DBS depending on the types of channel bank arrangements. (The terms display type, table type, and form type are used interchangeably in various documentation.)

5.59 Unfortunately, Table A in Fig. 120 does not directly give a one-to-one indication of exactly which displays are used. Table A in Fig. 120 specifies how many and what type assignment tables (Tables B, C, etc.) are used. In addition, Tables B, C, etc., can each accommodate two displays; however, only one may actually be used. The determination of the specific display numbers must be made by referring to Tables B, C, etc., of Fig. 121 and 122. It is important to only provide display assignment validation entries as specified in DRT 01 (Fig. 2) for displays that are actually used.

5.60 For the sample data in Fig. 121 and 122, Tables B and C are seen to include detailed assignment data for displays 8 and 9 while only display 10 is used on Table C of Fig. 122. Hence, three display assignment validation entries, as specified by DRT 01 (Fig. 2), are required. Assuming the remote identification is given as ABCDEFBD, these three entries would be given in magnetic tape input format as follows:

A01ABCDEFBD 8 DBQ

A01ABCDEFBD 9 DBQ

A01ABCDEFBD 10 DAA

5.61 The analogous entry via the DBC position is shown in Mask 01 (Fig. 65).

5.62 The detailed CGA status assignment information for displays 8, 9, and 10 would be found on Tables B of Fig. 121 and Table C of Fig. 122. The portion of Table C illustrated in Fig. 122 is for D1 banks where the CGA units are actually located in a different bay than the channel bank. Note that CGAs are only assigned to words 1 and 3 while the associated RED (red)indications are assigned to words 2 and 4. The TCAS only requires detailed CGA status assignment information as a data base input. If the RED indications in a particular office are wired to the telemetry system, TCAS is advised of this by a data base input setting the RED MOND FLG to a Y as specified in DRT 28 (Fig. 18).

5.63 The actual CGA status assignment data base input, specified in DRT 02 (Fig. 3), requires the D-bank bay and UNIT number, not the CGA bay. This CGA status assignment input is merged internally with the T-Carrier System containing the exact same D-bank as specified in DRT 54 (Fig. 37) for T-Carrier System data. This allows TCAS to directly identify the failed system when a CGA is reported by

the telemetry system. In magnetic tape format, the first line of assignment data in Fig. 122 would be given as:

A02ABCDEFBD 10101142.01 1

5.64 The analogous entry via the DBC position is shown in Mask 02 (Fig. 16).

5.65 For D3 channel banks, the CGA and RED indications are both provided in the channel bank itself. The same bay designations will therefore appear on the left and right side of the TF form or possibly omitted from the left side as indicated in Fig. 121. An entry for the first line of data from Fig. 121 would be given as:

A02ABCDEFBD 8 101141.24 1

5.66 The MLSI assignment data is provided on forms such as illustrated in Fig. 123 and 124 (Forms D and B Fig. 123 and 124 assignments). One major difference is that Form B is filled out by the user as part of the final MLSI cross-connect activity. Another difference is that there is only one "type" of MLSI display designated as "EAM".

5.67 For the data that would be provided for Fig. 123 and 124, a single display assignment entry for validation purposes would be given in magnetic tape record format as:

A01ABCDEFBD 5 EAM

5.68 The analogous entry via the DBC position is shown in Mask 01 (Fig. 65).

5.69 The detailed assignment information for MLSI is contained on Form B illustrated in Fig. 124. Note that Form B does not directly contain the telemetry display and word identification. These should be taken from Form D and transcribed onto Form B, as illustrated, before preparing the data base input. The data in magnetic tape format for the first line on Form B would be as follows:

A03ABCDEFBD 5 101237.44 2 6 2

5.70 The analogous entry via the DBC position is shown in Mask 03 (Fig. 67).

5.71 The objective of this input is to merge the telemetry status point to the failed patch line through the common repeater specified in this entry and the DRT 68 (Fig. 49) data for patch lines. Hence, it is essential that the repeater identification in these two records be identical.

5.72 Repeater bay fuse statuses are monitored in conjunction with the use of RAUs. Because of this relationship, FUSE status assignment data are discussed after the description of RAUs in the next section on switch assignments.

D. Telemetry Switch Point Assignments

5.73 Before discussing switch point assignments, the basic organization of telemetry switch point data should be understood. As with status points, an E2 remote can have up to 4096 separate switch points. However, the organization is different. For switches, there can be 16 groups of 16 subgroups each containing 16 switch points. Subgroups 1 and 2 and the last half of Subgroup 4 in Group 1 are dedicated to the common switching associated with RAUs as described later and cannot be assigned. Subgroup 3 and the first half of Subgroup 4 in Group 1 must be used for the first 23 assignable RAUs. The remaining subgroups can be used for additional RAU, ACO, and MPE switch point functions. The E2A has approximately one-half the capacity of E2.

5.74 Switch point assignment data for ACOs are obtained from the same TF608-034 forms containing the CGA status assignments. The specific switch subgroups used are not directly available from a table, such as Table A in Fig. 120, but must be found by scanning Tables B, C, etc., entries. For example, ACO assignments provided on Tables B and C in Fig. 121 and 122 are seen to be made in Group 1, Subgroups 5 and 6. Hence, ACO "subgroup function" validation entries must be made for these two switch subgroups. The entries in magnetic-tape data record format would be as follows:

A11ABCDEFBD 1 5 ACO

A11ABCDEFBD 1 6 ACO

5.75 The analogous entry via the DBC position is shown in Mask 11 (Fig. 73).

5.76 The detailed ACO switch point assignment data, as specified in DRT 14 (Fig. 13), is obtained directly from Tables B and C in Fig. 121 and 122. The ACO is on a per bay basis and hence one

entry appears for every six D3 banks and every three D1 banks. The first entry in magnetic-tape data record format for the D3 data in Fig. 121 would be:

A14ABCDEFBD 1 5 1 141.24

5.77 The analogous entry via the DBC position is shown in Mask 14 (Fig. 76).

5.78 To properly understand the RAU assignment data, it is necessary to understand the physical arrangements of RAUs in an office. The original concept was to mount an RAU in each repeater bay where a single data base input for each RAU, as specified by DRT 12 (Fig. 11), would allow the remote to access the RAU. The RAU, in turn, would be wired to the repeaters in the bay in a dedicated manner—the crossbar switches in RAU rows 1 and 2 to the repeaters in Shelf 1, etc.

5.79 In order to provide flexible RAU mounting arrangements with more than one RAU located in a bay (and not necessarily a repeater bay) and to allow one RAU to handle several partially equipped repeater bays, a two-step assignment procedure is now required. The entry specified by DRT 12 (Fig. 11) allows the remote to access the RAU while the entry specified by DRT 13 (Fig. 12) allows an RAU shelf (a pseudo shelf concept) to be assigned to any repeater shelf. The wiring between the RAU shelf and the repeaters in the repeater shelf is still dedicated.

5.80 The RAU assignment data is contained on TF608-040 forms as shown in Fig. 125 and 126. The FUSE and RAU assignment data are contained on this form in a manner roughly analogous to the way CGA and ACO data are contained on the TF608-034 forms. Although the form uses DBY for RAU and FUSE identification purposes, the DRT 11 (Fig. 10) requires that RAU be used in the SW SGRP TYPE item to specify RAU functions. The entry for the sample RAU data in Fig. 125 would be given in magnetic-tape record format as follows:

A11ABCDEFBD 1 3 RAU

5.81 The analogous entry via the DBC position is shown in Mask 11 (Fig. 73).

5.82 The RAU switch point assignment data, as specified by DRT 12 (Fig. 11), would be given in magnetic tape record format for the first entry in Fig. 125 as follows:

A12ABCDEFBD 1 3 2 143.01 100

5.83 The analogous entry via the DBC position is shown in Mask 12 (Fig. 74).

5.84 The RAU shelf to repeater shelf assignment data, as specified by DRT 13 (Fig. 12), is contained in Fig. 126. This input is required even though the RAU is actually mounted in the repeater bay in this example. The first entry in that DRT would be given in magnetic tape record format as:

A13ABCDEFBD 143.01 100 1143.01 1

5.85 The analogous entry via the DBC position is shown in Mask 13 (Fig. 75).

5.86 The FUSE status assignment data is contained on the TF608-040 form with RAU data when the RAU is installed. The repeater shelf fuses for all repeater shelves associated with an RAU are ordered together and assigned to a status point associated with the RAU unit. The TCAS will, of course, know the associated repeater bay(s) through the entry of DRTs 12 and 13 data (Fig. 11 and 12). The first line of fuse status assignment data given in Fig. 126 would be entered in magnetic-tape record format as:

A04ABCDEFBD 7 1 2 143.01 100

5.87 The analogous entry via the DBC position is shown in Mask 04 (Fig. 68).

5.88 Prior to the entry of detailed FUSE status assignment data, a display assignment validation entry, as specified in DRT 01 (Fig. 2), must be provided. Fuse displays are identified as display-type DBY. Hence, the entry in magnetic-tape record format for the example would be given as:

A01ABCDEFBD 7 DBY

5.89 The analogous entry via the DBC position is shown in Mask 01 (Fig. 65).

ADMINISTRATIVE DATA

5.90 Administrative data identify corporate entities in the served network that require re-

ports. It also specifies portions of that network that are to be controlled by each MC and MAC position at the FMAC-M. The data is not generally available from existing records, and may be provided as needs are identified. The FMAC-M should assume the responsibility for their provision.

A. Corporate Structure Data

5.91 The TCAS provides for the description of a user's organizational structure that permits certain statistical data (T-Carrier System failures, etc.) to be summarized at various levels in the hierarchy for report purposes. The general corporate structure entities accommodated are illustrated in Fig. 62 and are in accordance with those described in Practices 751-100-110 and 751-100-365.

5.92 The corporate structure data base information must be entered into TCAS in hierarchical order starting with the /**SET:TELCO** command. The departmental structure is entered using DRT 31 (Fig. 20). The departments, network operation department, engineering department, etc., must be selected carefully to ensure proper distribution of reports.

5.93 Below the departmental level, as many subordinate entities as are required may be defined. Each entity must be assigned a unique code and specify the higher level entity to which it is subordinate. From the departmental level to the office level, a six level structure has been accommodated as shown in Fig. 62. The detailed data requirements for each level are given in DRTs 31 through 36 (Fig. 20 through 25).

5.94 The lowest level in the network is the corporate structure office and its code must be entered as part of the data base implementation if corporate structure reports are required at any level. Network performance data is accumulated at the office level and may be summarized at any higher level. Reports will be produced for any level on a weekly, monthly, and/or quarterly basis depending on the report interval flags specified in accordance with DRTs 31 through 36 (Fig. 20 through 25).

5.95 Some sample corporate structure data in magnetic-tape format is given below:

A30NYNNNN

A31NYOPNNNNY

A32NYABCDEOPNNNYY

A33NYABCDEEAABCDENNYY

A 34NY **ABCDEEA01** ABCDEEANNYY

A3535NYABCDEEA01 **XX** ABCDEE A01NNNN

A36NYABCDEFBDF10ABCDEEA01XXNYYY

5.96 The analogous entries via the DBC position are shown in Masks 31 to 36 (Fig. 83 through 88).

5.97 The previous entries would indicate that reports would be compiled on a monthly and quarterly basis for the ABCDEEA01 district in the OPN department, where one of the offices in the district is the ABCDEFBDF10 office. Note that the hierarchical chain must be complete even if some entities do not actually exist. For example, the subdistrict entry in DRT 35 (Fig. 24) is used to simply link the offices to the district, even though the ABCDEEA01XX subdistrict does not exist.

B. Network Portions Data

5.98 The TCAS has the ability to distribute trouble cases opened on systems or cables located in a particular "portion" of the overall T-carrier network to a particular MC or MAC position. This type of work-load distribution is accomplished by simply assigning a specific set of system and/or span control offices to a particular CDT position by a data base entry as specified in DRT 29 (Fig. 19).

5.99 In addition to the primary CDT assignment, a secondary assignment can be specified in the event the primary CDT is down.

5.100 This type of work-load distribution is optional. If no data base entries are provided, work is distributed on a "least load" basis to the MC or MAC positions.

5.101 A sample network is shown in Fig. 127 which is divided into four portions for assignment to four CDT positions. The data base entries in magnetic-tape format to assign network portion 1 to CDT 1 are as follows:

A29ABCDEFBD1 1 2 A29ABCDEFBD2 1 2

A29ABCDEFBD3 1 3 A29ABCDEFBD4 1 3

A29ABCDEFBD5 1 4

A29ABCDEFBD6 1 4

5.102 The analogous entry via the DBC position is shown in Mask 29 (Fig. 82).

5.103 The previous data also illustrates the concept of distributing the load for CDT 1 fairly equally to CDT 2, 3, and 4 in the event CDT 1 is down.

6. ERROR RESOLUTION

6.01 Every data base transaction is tested for the following extensive set of data requirements prior to actual entry into the data base:

(a) Add transactions must meet the requirements listed in DRTs 01 through 99

(b) Delete transactions must be executed under favorable status conditions and conform to certain hierarchical constraints

(c) Change transactions must generally meet both delete and add requirements.

6.02 Any detected error results in the rejection of the entire transaction without effect on the data base. The transaction and the type of error are retained in internal error files for subsequent error reports.

6.03 In addition to detected errors, undetected equipment identification errors may occur, resulting in a failure to properly merge T-Carrier System layout and telemetry assignment data. Supplemental data base reports are provided to resolve this problem.

ERROR TYPES

6.04 Figure 128 lists general errors that are primarily applicable to add and change transactions. They result when the specific requirements listed in DRTs 01 through 99 are violated, as follows:

(a) **Spelling errors** result when an item code does not conform to its spelling requirements or when a required code is omitted. All items must be coded in accordance with the specifications in the TCAS code catalog. In addition to these requirements, certain codes must be established by the prior entry of a higher level record in the hierarchy. A spelling error detected for a lower level item may in fact indicate that the hierarchical entry rules have been violated.

(b) **Primary key errors** result when an attempt is made to add a record with a primary key that already exists in the data base or to delete a nonexistent record. Both cases also apply to changes.

(c) **Secondary key errors** apply only to system and patch line layout records. When adding data, the error indicates a violation of routing continuity. This may be a discontinuity in the span line route or, for local system terminal offices, nonmatching codes for the A system terminal and first span terminal office or for the Z system terminal and the last span terminal office. For change, the secondary key error results when the data does not exist in TCAS.

(d) **Incompatible item string errors** result when the hierarchical order of entry rules for adding records are violated. Specifically, they indicate that an item string has not been defined via the prior entry of a higher level record in the hierarchy.

(e) **Duplicate assignment errors** result from an attempt to specify certain equipment identifications and circuit-order numbers that have been previously recorded in the data base. When the error occurs in system layout data, the system or patch line to which the entry is already assigned is identified on the errors report.

(f) **Validation errors** are a miscellaneous class whose interpretation is a function of the type of record in the transaction. There are currently only the following three cases:

(1) When more than 128 remote identification records are entered.

(2) When the E2 DISPL specified in the status assignment records does not correlate with a legitimate display type for displays referenced by CGA, MLSI, or FUSE status assignment records.

(3) When the E2 SW SGRP specified in the switch point assignment records does not agree with a legitimate switch type for subgroups referenced by RAU or ACO switch assignment records.

6.05 Figure 129 lists hierarchical violations that may occur in delete transactions. These result from an attempt to delete a record that is referenced by one or more lower level records in the hierarchy. In order to execute the delete, it is first necessary either to delete or change the reference in each lower level record.

6.06 Hierarchical violations may also result from an attempt to change items that are directly or implicitly referenced by lower level records. These items and the type of dependent record are listed in Fig. 130. In order to execute the change, it is again necessary to first delete or change the reference in each lower level record.

6.07 Figure 131 lists status messages that may occur in delete or change transactions. They occur when the transaction is rejected because the data in question was of interest to one or more TCAS programs. They are not data base errors. The transaction may be reentered when the specified condition has been corrected.

6.08 Additional error types can occur when data base entries are made via magnetic tape with improperly prepared data. They are to be interpreted as follows:

(a) **DA BAS ACTN CD ERROR** indicates that the action code is illegal or missing.

(b) **RECORD NUMBER ERROR** indicates that the record type specified is illegal or missing.

(c) **MISSING RECORD** applies to record groups only and means that a required record is missing or out of order.

(d) **ILGL PRMRY KEY** applies only to record groups and means that the primary key field in one or more members of the group does not match the group header record.

(e) **ILGL SCDRY KEY** applies only to record groups, and means that the entry requirements for one or more records in the group have been violated.

ERROR FILE

6.09 In the event of an error, that particular page of the mask will be displayed again on the screen, and the data field (or items) in error will be highlighted by flashing in intensity. At this point, the user has the option of reviewing the data on the mask to see if an error has been made in transcribing the information from the original source document.

6.10 If the error(s) cannot be resolved, the data should be directed to the error file for later correction. To direct the data to the error file, the **/IN:DATA,ERROR** command should be entered. Once the data is directed to the error file, it will stay there until it is corrected and sent to the data base or until the error file is purged. Each data base record is assigned an unique number, for identification, when that data base is directed to the error file. This number is referred to as the ERN (error reference number).

6.11 A hard copy of the data errors can be obtained that consists of the specific data items entered in error. The error entered on the last mask is underlined, and the type of error is indicated by a footnote. The error report can be obtained by the **/OP:DATAERR** input command.

6.12 After the error has been resolved, the user makes the corrections on the masks and redirects the mask to the data base using the **/IN:DATA** input command.

ERROR REPORTS

6.13 For data base entries via magnetic tape, add transaction errors are reported by record type and in the format in which they were entered. Error messages appear on the error reports as indicated in Fig. 128. Misspelled items are clearly identified. Duplicate assignments in circuit layout data identify the associated system or patch line. A portion of a magnetic-tape error report for system data is shown in Fig. 132.

6.14 For data entered via the DBC and EFAC positions, the error reports are more explicit with regard to the type of errors. For example, if the error is due to a cable not being previously defined, it is

reported as CABLE NOT DEFINED. For magnetic tape-reports this would be referred to as an INCOMPATIBLE ITEM STRING associated with a DRT 59. A portion of a CDT error report for system data is shown in Fig. 133.

6.15 Delete transactions are reported by record type in magnetic-tape format only for deletions performed via either magnetic tape or the DBC and EFAC positions. All transactions, whether accepted or rejected, are reported. Spelling, primary key, and hierarchical errors and status messages may be reported. A sample report for unsuccessful deletions is shown in Fig. 134.

6.16 The FMAC-M must resolve rejections due to illegal status by reentering the transactions when the condition has cleared. In order to resolve hierarchical errors hierarchical reports are provided. These are referred to as DBL (data base list) reports. In the event of a data rejection, due to a hierarchical violation, a DBL of dependent data can easily be obtained to resolve the problem.

6.17 Rejected change transactions by magnetic tape, DBC, or EFAC inputs are reported to the user by record type in a magnetic tape format. These errors should be resolved as outlined in previous paragraphs for add and delete transactions. A sample change error report is shown in Fig. 135.

SUPPLEMENTAL DATA BASE REPORTS

6.18 Although considerable testing is performed on the input data to reject erroneous data, there is one type of serious error that can go undetected on input. This is where an acceptable but incorrect equipment identification is input for either an equipment to telemetry status assignment, or equipment to T-Carrier System assignment. In this case, the two entries cannot be merged to associate the telemetry status point to the T-Carrier System for failure monitoring purposes. Two reports are available which specifically provide for the detection of this type error.

6.19 **Telemetry Assignment Report** basically provides the same data as contained on the CGA or MLSI status assignment masks (Masks 02 and 03) except that the associated system or patch line is also identified. A sample report is contained in Fig. 136 for D-bank assignments. The absence of a system for Bay 101.04, Unit 2 could indicate that the system data for the system using that bank was entered incorrectly.

6.20 **Unmonitored Equipment Report** directly lists D-bank/digroup and office repeater identification appearing in system layout data which have no corresponding telemetry assignments. A typical report is shown in Fig. 137. By comparing the unmonitored equipment identifications to those in the telemetry assignment report, any incompatible or omitted equipment identifications can be identified.

6.21 **Switch Assignment Reports** list the RAU and ACO switch point assignments contained in the data base. The reports basically provide the same data as contained on Masks 12 and 14 except that for RAUs the associated repeater bay shelf (entered via Mask 13) is also identified. In addition, the RAU report includes fuse status assignment information originally entered via Mask 04.

6.22 After the initial data base load is complete, an efficient method is available for verifying the assignment of equipment to systems and patch lines. This is provided via the **Equipment Inventory Report** which lists the systems assigned to D-banks/digroups and office repeaters by office and bay in a well organized sorted format. A visual comparison of the system identifications typically recorded on the bays in an office to those listed in the equipment inventory report provides an excellent independent test of the data base accuracy. It is recommended that this audit be performed following the initial load and then periodically as required.

7. DATA BASE ADMINISTRATION

GENERAL

7.01 The TCAS requires a complete, accurate, and current data base in order to support the TCAS features described earlier. The extent to which these objectives are met has a very direct effect on the credibility, and therefore, value of the TCAS System. In order to accomplish these objectives, responsibilities for providing and correcting the data must be clearly delegated and lines of communication established. Typically, the responsible organizations are the FMAC-M and the CPC.

7.02 The FMAC-M is the organization with prime responsibility for providing the initial load

and ongoing maintenance of the TCAS data base. For most TCAS installations, the FMAC-M will simply obtain T-carrier SLR or I/A record data from the CPC and telemetry assignment data from the central office records and enter the data via the DBC and/or EFAC position—for both the initial load and for on-going maintenance. In some instances, magnetic-tape bulk input techniques may be desirable—particularly for the initial load.

7.03 The amount of add, delete, and change activity will vary considerably from one user to another. A large metropolitan area will grow at a rate of 1000 or more T-Carrier Systems per year. The amount of change activity could run from less than 500 to more than 5000 SLRs or I/A records issued per year depending on activities such as 201 repeater replacements and DSX installations.

7.04 To keep up with this volume of activity, and for the timely resolution of errors associated with incorrect data, proper administrative procedures and clear channels for interchanging data must be established between the FMAC-M, CPC, and central offices. Some specific responsibilities for the FMAC-M and CPC are identified below.

FMAC-M RESPONSIBILITIES

7.05 The FMAC-M should have the responsibility of providing and resolving errors in the telemetry assignment data. Specific responsibilities are as follows:

(a) To supervise the installation tests specified in Practice 365-330-200 and obtaining the assignment drawings after making any necessary corrections

(b) To arrange for the provision of any input tapes or for DBC and/or EFAC position entry, according to volume

(c) To resolve reported errors and to identify equipment identification errors by means of the unmonitored equipment and telemetry assignment reports

(d) To coordinate the resolution of equipment identification errors with the CPC and the central office forces.

7.06 The FMAC-M should provide and correct network portion and corporate structure data. The former is entirely an in-house matter. The latter requires that all organizations requiring reports are identified.

7.07 The FMAC-M must obtain all errors reports and return those for which the CPC is responsible. Attendant with this responsibility is that of monitoring the CPC response.

7.08 The FMAC-M must provide hierarchical reports associated with hierarchical violations in the network organization and system layout data for the CPC.

CPC RESPONSIBILITIES

7.09 The primary responsibility of the CPC is to provide and correct all office, cable, alias, and system layout data. Specific responsibilities are as follows:

(a) To arrange for the provision of initial load data in advance of the TCAS installation. A minimum of a 3-month lead time, and longer if only manual records are maintained, is required.

(b) To provide the FMAC-M with all changes in the T-carrier network in a timely fashion on a going forward basis. This includes SLRs for new systems and patch lines, disconnect orders, and clearly identified changes on existing facilities.

(c) To respond rapidly to errors reported in TCAS errors reports.

7.10 The CPC must assist the FMAC-M in resolving inconsistencies in equipment identifications in the system layout and telemetry assignment data. As the organization responsible for maintaining equipment inventories, they are in the best position to specify the correct codes for these entities.

LINES OF COMMUNICATION

7.11 The important interfaces that must be established are clearly between the FMAC-M and CPC and the FMAC-M and the central offices. During the initial installation of TCAS, special interfaces between these organizations will naturally be established. On-going operations may present certain difficulties and require the creation of contacts,

especially in the CPC. The following should be considered:

(a) In order to supervise installation acceptance tests and obtain assignment drawings for data base updates, the FMAC-M must be aware of any additions of T-carrier equipment in monitored offices. This will generally require that the central office management inform the FMAC-M of any such additions, or changes, on a regular basis.

(b) The CPC must arrange to provide all records for all additions and changes to the T-carrier network. The timing must coincide as closely as possible with the actual completion of the work.

(c) The FMAC-M must have a clearly identified contact in the CPC for the purpose of returning error reports. This contact must be familiar with TCAS error reports and their interpretation. Additionally, a system of numbering errors reports and monitoring error resolution is desirable.

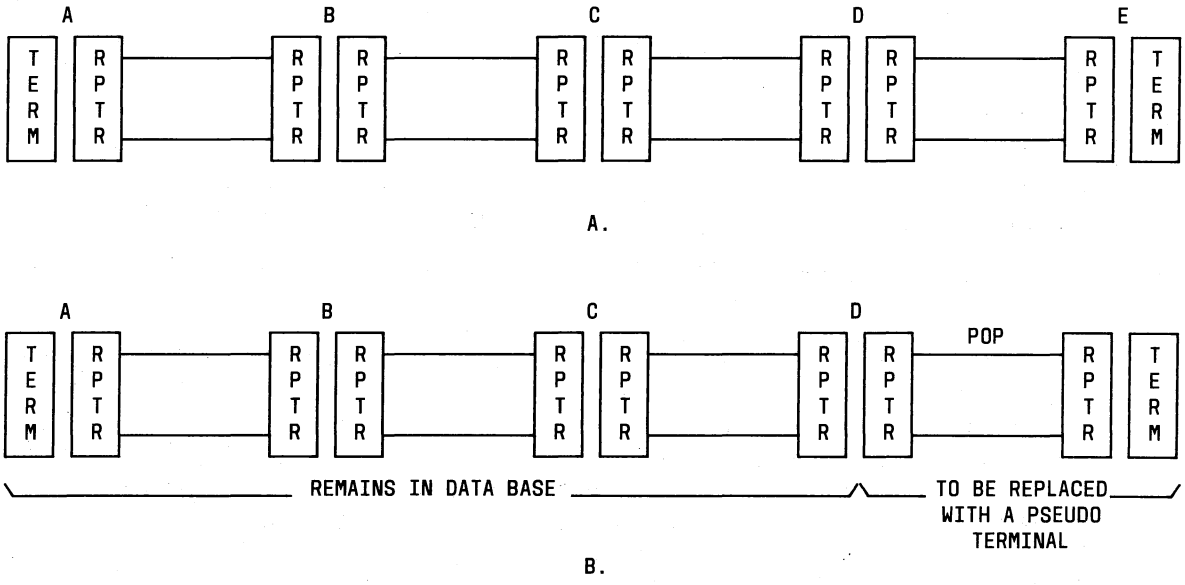

Fig. 1—Typical Four Span T-Carrier System Showing Partial Ownership and Pseudo Terminal

	ITEM (LABEL-ITEM NAME)	POS	CHR	RQD	CDE	PDS	DAT
	DA BS ACTN CD 01	01 02	01 02	Y Y	F F		
1 2	REM ID STAT DISPL	04 15	11 02	Y Y	P28 F		
3	STAT DISPL TYPE	17	03	Y	F		

NOTES:

1. One record is required for each status display in use at an E-telemetry remote. These records are used for data base purification and should not be provided for unused displays.
2. The records cannot be entered until after the remote has been defined by a Record 28 entry for hard-wired monitoring arrangements. In addition, Record 39 entries must be made before Record 01 entries for displays associated with E2A serial data ports.
3. REM ID and STAT DISPL identify an E-telemetry status display at a remote.
4. STAT DISPL TYPE specifies whether the status display type is applicable for CGA, MLSI, or FUSE assignments. Mixed displays are not permitted.

Fig. 2—Table 01 Status Display Type (Notes)

	ITEM (LABEL-ITEM NAME)	POS	CHR	RQD	CDE	PDS	DAT
	DA BS ACTN CD 02	01 02	01 02	Y Y	F F		
1 2 3 4	REM ID STAT DISPL STAT WD STAT BIT	04 15 17 18	11 02 01 02	Y Y Y Y	P28 F F F	P01 P01	
5 6	SYS TERM-BAY SYS TERM-UNIT	20 30	10 04	Y Y	V V		Y Y

NOTES:

1. One record is required for each CGA monitored via E-telemetry. These records are required for direct hard-wired monitoring via E2, E2A, or the E2A SDP; and for indirect monitoring via serial data ports on the E2A SDP.
2. REM ID, STAT DISPL, STAT WD, and STAT BIT identify a CGA status bit for assignment. The display must have been defined as a CGA status display type by a Record 01 entry.
3. SYS TERM-BAY and -UNIT specify the location of the system terminal within the office. The codes for these items must agree with the corresponding codes for these items in Record 54 or 94 for the system being monitored.

Fig. 3—Table 02 Carrier Group Alarm (CGA) Status Assignment (Notes)

	ITEM (LABEL-ITEM NAME)	POS	CHR	RQD	CDE	PDS	DAT
	DA BS ACTN CD	01	01	Y	F		
	03	02	02	Y	F		
1	REM ID	04	11	Y	P28	P01	
2	STAT DISPL	15	02	Y	F	P01	
3	STAT WD	17	01	Y	F		
4	STAT BIT	18	02	Y	F		
5	OFF RPTR-BAY	20	10	Y	V		Y
6	OFF RPTR-SHLF	30	04	Y	V		Y
7	OFF RPTR POS	34	02	Y	F		Y
8	OFF RPTR SD	36	01	Y	F		Y

NOTES:

1. One record is required for each MLSI monitored via E-telemetry. These records are required for both direct hard-wired monitoring via E2, E2A, or the E2A SDP; and for indirect monitoring via serial data ports on the E2A SDP.
2. REM ID, STAT DISPL, STAT WD, and STAT BIT identify a MLSI status bit for assignment. The display must have been defined as a MLSI status display type via a Record 01 entry.
3. OFF RPTR-BAY, OFF RPTR-SHLF, OFF RPTR POS and OFF RPTR SD identify the location of the patch line offic repeater within the office. The codes for these items and the SYS TERM-OFF ID specified by Record 28 for the remote must agree with the corresponding codes in Record 68 or 97 and 99 for the patch line being monitored.

Fig. 4—Table 03 Maintenance Line Status Indicator (MLSI) Status Assignment (Notes)

	ITEM (LABEL-ITEM NAME)	POS	CHR	RQD	CDE	PDS	DAT
	DA BS ACTN CD 04	01 02	01 02	Y Y	F F		
1 2 3 4	REM ID STAT DISPL STAT WD STAT BIT	04 15 17 18	11 02 01 02	Y Y Y Y	P28 F F F	P01 P01	
5 6	RAU-BAY RAU-UNIT	20 30	10 04	Y Y	V V		Y Y

NOTES:

1. One record is required for each RAU. This record is applicable for direct hard-wired monitoring via E2, E2A, or the E2A SDP. Fuse status information is not available with indirect monitoring via serial data ports on the E2A SDP.
2. REM ID, STAT DISPL, STAT WD, and STAT BIT identify a FUSE status bit for assignment. The display must have been defined as a FUSE status display type via a Record 01 entry.
3. RAU-BAY and -UNIT specify the location of the RAU associated with the repeater bay fuses in the office.

Fig. 5—Table 04 Fuse Status Assignment (Notes)

	ITEM (LABEL-ITEM NAME)	POS	CHR	RQD	CDE	PDS	DAT
	DA BS ACTN CD 05	01 02	01 02	Y Y	F F		
1 2 3	REM ID STAT DISPL STAT WD	04 15 17	11 02 01	Y Y Y	P28* F F	P01 P01	
4 5 6 7	FRAME ID PRE/USER DEF FLG FRAME TYPE CONT DISPL	18 28 29 36	10 01 07 02	Y Y Y N	V Y Y F		Y Y Y Y

NOTES:

1. One record is required for each high-capacity equipment alarm set to be processed by E-telemetry.
2. REM ID, STAT DISPL, and STAT WD identify a specific range of bits for an alarm set assignment. The display must have been defined as one of the high-capacity frame display types via a Record 01 entry, and the STAT WD provided must be consistent with the size of the alarm set. In cases where the alarm set spans two displays, CONT DISPL is the display number of the continuation display number of the continuation display to be used. This display must also have been defined via a Record 01 entry, with a display type identical to that of the STAT DISPL.
3. FRAME ID, PREV/USER DEF FLAG, and FRAME TYPE identifies the piece of equipment to be monitored by the E-telemetry remote and provides an access path to the associated alarm set messages.

* Use P28 for TCAS remote and P43 for a TASC remote.

Fig. 6—Table 05 High-Capacity Frame Alarm Set Assignment (Notes)

	ITEM (LABEL-ITEM NAME)	POS	CHR	RQD	CDE	PDS	DAT
	DA BS ACTN CD	01	01	Y	F		
	06	02	02	Y	F		
1	REM ID	04	11	Y	P28*	P01	
2	STAT DISPL	15	02	Y	F	P01	
3	STAT WD	17	01	Y	F		
4	STAT BIT	18	02	Y	F		
5	MISC EQPT 1	20	10	Y	V		Y
6	MISC EQPT 2	30	04	N	V		Y
7	HOLDING TIME – MINUTES	34	06	Y	F		

NOTES:

1. One record is required for each miscellaneous alarm to be monitored via E-telemetry.
2. REM ID, STAT DISPL, STAT WD, and STAT BIT identify a miscellaneous alarm status bit for assignment. The display must have been assigned as a miscellaneous status display type via a Record 01 entry.
3. MISC EQPT 1 and MISC EQPT 2 identify the equipment from which the miscellaneous alarm is to originate.
4. Holding time identifies an alarm holding time, used to minimize the effort required to process "hitting" alarms.

* Use P28 for a TCAS remote and P43 for a TASC remote.

Fig. 7—Table 06 Miscellaneous Equipment Status Assignment (Notes)

	ITEM (LABEL-ITEM NAME)	POS	CHR	RQD	CDE	PDS	DAT
	DA BS ACTN CD 07	01 02	01 02	Y Y	F F		
1 2 3	OFF ID MISC EQPT FLD 1 MISC EQPT FLD 2	04 15 25	11 10 04	Y Y N	P25 P06 P06	P06 P06 P06	
4 5 6 7 8	LOG ACTIVITY FLG BELL FLG AUTO TC FLG TBL CSE PRIORITY 30-CHAR. MESSAGE	29 30 31 32 34	01 01 01 02 30	Y Y Y N Y	F F F F V		

NOTES:

1. One record is required for each miscellaneous alarm message assignment.
2. OFF ID, MISC EQPT FLD 1, and MISC EQPT FLD 2 identify the equipment for which the message is to be assigned. The miscellaneous equipment must have been identified via a Record 06 entry.
3. LOG ACTIVITY FLAG, BELL FLAG, AUTO TC FLAG, and TBL CSE PRIORITY are used by alarm processing and trouble case administration.
4. The 30-character user-defined alarm message begins in column 34.

Fig. 8—Table 07 Miscellaneous Alarm Message Assignment (Notes)

	ITEM (LABEL-ITEM NAME)	POS	CHR	RQD	CDE	PDS	DAT
	DA BS ACTN CD 08	01 02	01 02	Y Y	F F		
1 2	FRAME TYPE ALARM NUMBER	04 11	07 03	Y Y	F F	P05	
3 4 5 6 7	LOG ACTIVITY FLG BELL FLG AUTO TC FLG TBL CSE PRIORITY DS1 FLG	14 15 16 17 19	01 01 01 02 01	Y Y Y N Y	F F F F F		

NOTES:

1. One record is required for each user-defined alarm message assignment.
2. FRAME TYPE and ALARM NUMBER establish an access path from an alarm set assignment to the alarm set message assignment.
3. The maintenance alarm set must have been previously been defined via a Record 05 entry.
4. LOG ACTIVITY FLG, BELL FLG, AUTO TC FLG, TBL CSE PRIORITY, and DS1 FLG are used by alarm processing.
5. The 40-character, user-defined alarm message begins in Column 20.

Fig. 9—Table 08 High-Capacity Alarm Set Assignment Frame Type (Notes)

	ITEM (LABEL-ITEM NAME)	POS	CHR	RQD	CDE	PDS	DAT
	DA BS ACTN CD 11	01 02	01 02	Y Y	F F		
1 2 3	REM ID SW GR SW SGRP	04 15 17	11 02 02	Y Y Y	P28 F F		
4	SW SGRP TYPE	19	03	Y	F		

NOTES:

1. One record is required for each switch subgroup actually in use in a telemetry remote office. These records are used for data base purification and should not be provided for unused switch subgroups.
2. REM ID, SW GR, and SW SGRP identify an E-telemetry switch subgroup at a remote.
3. SW SGRP TYPE specifies whether the switch subgroup type is for ACO or RAU functions. Mixed switch subgroups are not permitted.

Fig. 10—Table 11 Switch Subgroup Type (Notes)

	ITEM (LABEL-ITEM NAME)	POS	CHR	RQD	CDE	PDS	DAT
	DA BS ACTN CD 12	01 02	01 02	Y Y	F F		
1 2 3 4	REM ID SW GR SW SGRP SW PT	04 15 17 19	11 02 02 02	Y Y Y Y	P28 F F F	P11 P11 P11	
5 6	RAU-BAY RAU-UNIT	21 31	10 04	Y Y	V V		Y Y

NOTES:
1. One record is required for each RAU unit.
2. REM ID, SW GR, SW SGRP, and SW PT identify on RAU switch point for assignment. The switch subgroup must have been defined as a RAU switch subgroup type via a Record 11 entry.
3. RAU-BAY and -UNIT specify the location of the RAU within the office.

Fig. 11—Table 12 RAU Switch Point Assignment (Notes)

	ITEM (LABEL-ITEM NAME)	POS	CHR	RQD	CDE	PDS	DAT
	DA BS ACTN CD 13	01 02	01 02	Y Y	F F		
1 2 3 4	OFF ID RAU-BAY RAU-UNIT RAU SHLF	04 15 25 29	11 10 04 01	Y Y Y Y	P01 P12 P12 F	P12 P12 P12	
5 6	OFF RPTR-BAY OFF RPTR-SHLF	30 40	10 04	Y Y	V V		Y Y

NOTES:

1. One record is required for each RAU shelf to repeater shelf connection. A J98722F RAU has a maximum capacity of eight shelves and a J98722M RAU has a maximum capacity of twelve shelves. The repeater shelf need not be in the same bay as the RAU.
2. OFF ID, RAU-BAY, RAU-UNIT, and RAU SHLF identify a RAU shelf for assignment to an office repeater shelf. The RAU unit must have been defined by a Record 12 entry.
3. OFF RPTR-BAY and -SHLF specify the location of the repeater shelf within the office.

Fig. 12—Table 13 RAU Shelf Assignment (Notes)

	ITEM (LABEL-ITEM NAME)	POS	CHR	RQD	CDE	PDS	DAT
	DA BS ACTN CD 14	01 02	01 02	Y Y	F F		
1 2 3 4	REM ID SW GR SW SGRP SW PT	04 15 17 19	11 02 02 02	Y Y Y Y	P28 F F F	P11 P11 P11	
5	SW TERM-BAY	21	10	Y	V		Y

NOTES:

1. One record is required for each system terminal bay in an office equipped with ACO.
2. REM ID, SW GR, SW SGRP, and SW PT identify on ACO switch point for assignment. The switch subgroup must have been defined as an ACO switch subgroup type via a Record 11 entry.
3. SYS TERM-BAY specifies the location of the system terminal bay within the office whose alarm is to be ACO'd.

Fig. 13—Table 14 ACO Switch Point Assignment (Notes)

	ITEM (LABEL-ITEM NAME)	POS	CHR	RQD	CDE	PDS	DAT
	DA BS ACTN CD	01	01	Y	F		
	15	02	02	Y	F		
1	REM ID	04	11	Y	P28*	P11	
2	SW GR	15	02	Y	F	P11	
3	SW SGRP	17	02	Y	F	P11	
4	SW PT	19	02	Y	F		
5	MISC EQPT 1	21	10	Y	V		Y
6	MISC EQPT 2	31	04	N	V		Y

NOTES:
1. One record is required for each miscellaneous equipment assignment.
2. REM ID, SW GR, SW SGRP, and SW PT identify a switch point for this assignment. The switch subgroup must have been defined as a miscellaneous subgroup type via a Record 11 entry.
3. MISC EQPT 1 and MISC EQPT 2 identify the equipment for which the switch point is assigned.

* P28 for TCAS remote, P43 for TASC remote.

Fig. 14—Table 15 Miscellaneous Equipment Switch Point Assignment (Notes)

	ITEM (LABEL-ITEM NAME)	POS	CHR	RQD	CDE	PDS	DAT
	DA BS ACTN CD 25	01 02	01 02	Y Y	F F		
1	OFF ID	04	11	Y	V		
2	POP FLG	15	01	Y	F		
3	FOREIGN OFF FLG	16	01	Y	F		
4	REPT DALY FLG	17	01	Y	F		
5	REPT WKLY FLG	18	01	Y	F		
6	INDEX INPUT TYPE	19	04	Y	F		
7	ACO PMT'D FLG	23	01	N	F		
8	TRCC ID	24	11	V	P*		
9	TCAS ID	35	5	Y	F		

NOTES:

1. One record is required for each legitimate office name in the network. These records are used for data base purification and it is essential that only legitimate office identifications be provided. Separate entries are required for system identification offices, control offices, terminal offices, and span routing offices if different terminologies are used for these items.
2. OFF ID defines the office. All references to the office in associated records must agree with the code specified.
3. POP FLG specifies the point of presence offices.
4. FOREIGN OFF FLG classifies the office as being either local or foreign. Offices should only be designated as foreign where system layout data is not available to the user. Routing continuity and equipment assignments in system layout data are not required for foreign offices. Once establised, the foreign office flag cannot be changed.
5. REPT DALY FLG and REPT WKLY FLG specify the intervals at which office statistics reports are to be produced for the office.
6. INDEX INPUT TYPE specifies whether the office is monitored by TCAS or TASC or whether manually gathered CGA register data is to be entered weekly (WREG) or monthly (MREG) for performance index reports.
7. ACO PMT'D FLG specifies on a per office basis whether alarm cutoff (for early installations) or alarm disable is permitted.
8. TRCC ID specifies the FMAC-M to which the office is assigned.
9. TCAS ID specifies the TCAS central unit to which the office is assigned. (TCAS1, TCAS2, TCAS3, or TCAS4).

Fig. 15—Table 25 Office Identification (Notes)

	ITEM (LABEL-ITEM NAME)	POS	CHR	RQD	CDE	PDS	DAT
	DA BS ACTN CD 26	01 02	01 02	Y Y	F F		
1 2 3	TRMTG-OFF ID RCVG-OFF ID CA DESIG	04 15 26	11 11 05	Y Y Y	P25 P25 V		
4 5	CA CONT-OFF ID ROUTE DESIGN	31 42	11 06	Y N	P25 V		

NOTES:

1. One record is required for each direction of transmission for each cable in the network. (Two records are required for single cable operation.) These records are used for data base purification and it is essential that only legitimate cable identification be provided.
2. TRMTG-OFF ID, RCVG-OFF ID, and CA DESIG identify a cable in the direction of transmission from the transmitting office to the receiving office. All references to the cable in associated system layout records must agree with these codes.
3. CA CONT-OFF ID specifies the office that is responsible for restoration and maintenance of the T-carrier span lines in the cable.
4. ROUTE DESIG is an optional identifier for the group of cables in a route.

Fig. 16—Table 26 Cable Identification (Notes)

	ITEM (LABEL-ITEM NAME)	POS	CHR	RQD	CDE	PDS	DAT
	DA BS ACTN CD 27	01 02	01 02	Y Y	F F		
1 2	ITEM NO ALIAS-VRBL CD	04 08	04 12	Y Y	F V	P	
3	PRIME-VRBL CD	20	12	Y	P	P	

NOTES:

1. One record is required for each item alias.
2. ITEM NO and ALIAS-VRBL CD specify an alternative code for an established item. The alias may appear in the input data but is translated to the prime code for internal use and on all output.
3. ITEM NO and PRIME-VRBL CD name the established item.
4. Alias records must be entered after the prime name has been established and before data records containing aliases are entered.

Fig. 17—Table 27 Alias Definition (Notes)

	ITEM (LABEL-ITEM NAME)	POS	CHR	RQD	CDE	PDS	DAT
	DA BS ACTN CD 28	01 02	01 02	Y Y	F F		
1	REM ID	04	11	Y	V		
2	SYS TERM-OFF ID	15	11	Y	P34		
3	REM-BAY	26	10	Y	V		
4	REM ADDR	36	03	Y	F		
5	TCT NO	39	02	Y	F		
6	DATA RATE	41	04	Y	F		
7	REM TYPE	45	03	Y	F		
8	RED MOND FLG	48	01	N	F		
9	DLM EQP'T FLG	49	01	N	F		

NOTES:

1. One record is required for each telemetry remote in the network.
2. REM ID identifies an E-telemetry remote. All references to the remote in associated status and switch assignment records must agree with the code specified in this record.
3. SYS TERM-OFF ID identifies the office for which the remote is providing direct hard-wired monitoring. The code for this item must agree with those specified in the corresponding codes in Records 54 and 94 for the systems being monitored.
4. REM-BAY specifies the location of the basic remote bay in the office.
5. REM ADDR thru REM TYPE specify the physical parameters required to communicate with the remote.

Fig. 18—Table 28 Remote Identification (Notes)

	ITEM (LABEL-ITEM NAME)	POS	CHR	RQD	CDE	PDS	DAT
	DA BS ACTN CD 29	01 02	01 02	Y Y	F F		
1	SYS CONT-OFF ID	04	11	Y	P25		
2 3	PRMRY-CDT NO DFLT-CDT NO	15 17	02 02	N N	F F		

NOTES:
1. One record is required for each system control office in the network when trouble case distribution by network protions is desired.
2. SYS CONT-OFF ID identifies a control office to be assigned to a Maintenance Controller CDT position for trouble case distribution.
3. PRMRY-CD NO is the position to which trouble cases associated with the office are assigned if the CDT is available (UP).
4. DFLT-CDT NO is the position to which the trouble cases are assigned if the primary CDT is not available (DOWN).

Fig. 19—Table 29 Network Portion Definition (Notes)

	ITEM (LABEL-ITEM NAME)	POS	CHR	RQD	CDE	PDS	DAT
	DA BS ACTN CD 31	01 02	01 02	Y Y	F F		
1 2	TELCO DEPT	04 08	04 03	Y Y	F V	P*5	
3 4 5 6	REPT DALY FLG REPT WKLY FLG REPT MTHLY FLG REPT QTRLY FLG	11 12 13 14	01 01 01 01	Y Y Y Y	F F F F		

NOTES:
1. TELCO and DEPT identify a department within the company. Enter one record for each department that requires reports.
2. REPT DALY FLG thru REPT QTRLY FLG specify the intervals at which reports are produced for the department.

Fig. 20—Table 31 Corporate Structure Department Definition (Notes)

	ITEM (LABEL-ITEM NAME)	POS	CHR	RQD	CDE	PDS	DAT
	DA BS ACTN CD 32	01 02	01 02	Y Y	F F		
1	AREA	04	05	Y	V		
2	DEPT	09	03	Y	P31		
3	REPT WKLY FLG	12	01	Y	F		
4	REPT MTHLY FLG	13	01	Y	F		
5	REPT QTRLY FLG	14	01	Y	F		
6	AREA CODE	15	03	N	F		
7	EXCHANGE	18	03	N	F		
8	TEL NO	21	04	N	F		

NOTES:

1. One record is required for each area requiring reports.
2. AREA identifies an area within the department. If area is divided into regions and territories, use regions or territories code in place of area code.
3. DEPT must have been defined via a Record 31 entry.
4. REPT WKLY FLG thru REPT QTRLY FLG specify the intervals at which reports are to be produced for the area.
5. AREA CODE, EXCHANGE, and TEL NO identify a dialup printer destination number for dialout report purposes. The AREA CODE must be legitimate and is required if a dialout destination is provided. The EXCHANGE and TEL NO must be 3- and 4-character numerics, respectively.
6. Name and address information may be specified as described on Record 31.

Fig. 21—Table 32 Corporate Structure Area Definition (Notes)

	ITEM (LABEL-ITEM NAME)	POS	CHR	RQD	CDE	PDS	DAT
	DA BS ACTN CD	01	01	Y	F		
	33	02	02	Y	F		
1	DIV	04	07	Y	V		
2	AREA	11	05	Y	P32		
3	REPT WKLY FLG	16	01	Y	F		
4	REPT MTHLY FLG	17	01	Y	F		
5	REPT QTRLY FLG	18	01	Y	F		
6	AREA CODE	19	03	N	Y		
7	EXCHANGE	22	03	N	Y		
8	TEL NO	25	04	N	Y		

NOTES:

1. One record is required for each division requiring reports.
2. DIV identifies a division with the area.
3. AREA must have been defined via a Record 32 entry.
4. REPT WKLY FLG thru REPT QTRLY FLG specify the intervals at which reports are to be produced for the area.
5. AREA CODE, EXCHANGE, and TEL NO identify a dialup printer destination number for dialout report purposes. The AREA CODE must be legitimate and is required if a dialout destination is provided. The EXCHANGE and TEL NO must be 3- and 4-character numerics, respectively.
6. Name and address information may be specified as described on Record 31.

Fig. 22—Table 33 Corporate Structure Division Definition (Notes)

	ITEM (LABEL-ITEM NAME)	POS	CHR	RQD	CDE	PDS	DAT
	DA BS ACTN CD 34	01 02	01 02	Y Y	F F		
1	DIST	04	09	Y	V		
2	DIV	13	07	Y	P33		
3	REPT WKLY FLG	20	01	Y	F		
4	REPT MTHLY FLG	21	01	Y	F		
5	REPT QTRLY FLG	22	01	Y	F		
6	AREA CODE	23	03	N	F		
7	EXCHANGE	26	03	N	F		
8	TEL NO	29	04	N	F		

NOTES:

1. One record is required for each district requiring reports.
2. DIST identifies a district within a division.
3. DIV must have been defined via a Record 33 entry.
4. REPT WKLY FLG thru REPT QTRLY FLG specify the intervals at which reports are to be produced for the district.
5. AREA CODE, EXCHANGE, and TEL NO identify a dialup printer destination number for dialout report purposes. The AREA CODE must be legitimate and is required if a dialout destination is provided. The EXCHANGE and TEL NO must be 3- and 4-character numerics, respectively.
6. Name and address information may be specified as described on Record 31.

Fig. 23—Table 34 Corporate Structure District Definition (Notes)

	ITEM (LABEL-ITEM NAME)	POS	CHR	RQD	CDE	PDS	DAT
	DA BS ACTN CD	01	01	Y	F		
	35	02	02	Y	F		
1	SUBDIST	04	11	Y	V		
2	DIST	15	09	Y	P34		
3	REPT WKLY FLG	24	01	Y	F		
4	REPT MTHLY FLG	25	01	Y	F		
5	REPT QTRLY FLG	26	01	Y	F		
6	AREA CODE	27	03	N	F		
7	EXCHANGE	30	03	N	F		
8	TEL NO	33	04	N	F		

NOTES:

1. One record is required for each subdistrict requiring reports.
2. SUBDIST identifies a subdistrict within a district.
3. DIST must have been defined via a Record 34 entry.
4. REPT WKLY FLG thru REPT QTRLY FLG specify the intervals at which reports are to be produced for the subdistrict.
5. AREA CODE, EXCHANGE, and TEL NO identify a dialup printer destination number for dialout report purposes. The AREA CODE must be legitimate and is required if a dialout destination is provided. The EXCHANGE and TEL NO must be 3- and 4-character numerics, respectively.
6. Name and address information may be specified as described on Record 31.

Fig. 24—Table 35 Corporate Structure Subdistrict Definition (Notes)

	ITEM (LABEL-ITEM NAME)	POS	CHR	RQD	CDE	PDS	DAT
	DA BS ACTN CD	01	01	Y	F		
	36	02	02	Y	F		
1	SYS CONT-OFF ID	04	11	Y	P25		
2	SUBDIST	15	11	Y	P35		
3	REPT DALY FLG	26	01	Y	F		
4	REPT WKLY FLG	27	01	Y	F		
5	AREA CODE	28	03	N	F		
6	EXCHANGE	31	03	N	F		
7	TEL NO	34	04	N	F		

NOTES:

1. One record is required for each system control office for which statistics are to be included in higher level corporate structure reports.
2. SYS CONT-OFF ID identifies a control office within the subdistrict.
3. SUBDIST must have been defined by a Record 35 entry.
4. REPT DALY FLG and REPT WKLY FLGs must be supplied; however, corporate structure-type reports are not presently provided at the control office level and the flags may be set to either Y or N.
5. AREA CODE, EXCHANGE, and TEL NO identify a dialup printer destination number for dialout report purposes. The AREA CODE must be legitimate and is required if a dialout destination is provided. The EXCHANGE and TEL NO must be 3- and 4-character numberics, respectively.
6. Name and address information may be specified as described on Record 31.

Fig. 25—Table 36 Corporate Structure Office Definition (Notes)

	ITEM (LABEL-ITEM NAME)	POS	CHR	RQD	CDE	PDS	DAT
	DA BS ACTN CD 37	01 02	01 02	Y Y	F F		
1	TCAS DA PORT NO	04	02	Y	F		
2 3	TCAS DA PORT TYPE OSS/SYS TERM-OFF ID	06 10	04 11	Y N	F P25		Y Y

NOTES:
1. One record is required for each data port connection to a SCCS or CMS.
2. TCAS DA PORT NO identifies a logical data port in the range 1-12.
3. TCAS DA PORT TYPE specifies whether the data port is used for a SCCS, CMS, TASC, or TCAS-TCAS (LNKx) data line.
4. OSS-OFF ID specifies the location of the SCCS, TASC, or other TCAS when the record pertains to a OSS data link. (Optional with LNKx).
5. SYS TERM-OFF ID specifies the location of 4 ESS Switch Digital Terminals (DT) when the record pertains to a CMS data link. The code specified for the item must agree with the corresponding codes in Records 54/94 for the systems being monitored by the CMS. (No entry with LNKx entry.)

Fig. 26—Table 37 TCAS Data Port Definition (Notes)

	ITEM (LABEL-ITEM NAME)	POS	CHR	RQD	CDE	PDS	DAT
	DA BS ACTN CD 39	01 02	01 02	Y Y	F F		
1 2	REM ID REM DA PORT NO	04 15	11 01	Y Y	P28 F		
3 4	SW MACH SYS TERM-OFF ID	16 27	11 11	Y Y	V P25		Y

NOTES:

1. One record is required for each serial data port of an E2A SDP which is connected via a data link to a 1/1A ESS or 2ESS switch.
2. REM ID and REM DA PORT NO identify an E2A serial data port. Serial data ports 1, 2 and 3 are associated in the E2A remote with status displays 17-32, 33-48, and 49-64, respectively. Status displays associated with an SDP must not have been previously defined by Record 01 entries. Following the Record 39 entry, the appropriate Records 01, 02 and 03 entries must be provided. The ESS switch scan points in the range 0-1023 for each office must be mapped into the appropriate 16 displays prior to entry.
3. SW MACH identifies the ESS switch.
4. SYS TERM-OFF ID identifies the system terminal office for systems monitored via the SDP. The code specified for this item must agree with the corresponding codes in Records 54 and 94 for the systems being monitored via the SDP.

Fig. 27—Table 39 Remote Data Port Definition (Notes)

	ITEM (LABEL-ITEM NAME)	POS	CHR	RQD	CDE	PDS	DAT
	DA BS ACTN CD 40	01 02	01 02	Y Y	F F		
1 2	SCCS-OFF ID SW MACH	04 15	11 11	Y Y	P25 V	P37	
3 4 5	SYS TERM-OFF ID SW MACH TYPE PRIM SW MACH FLG	26 37 43	11 01 01	Y Y Y	P25 F F		Y Y Y

NOTES:

1. One record is required for each switch entity which provides terminal office monitoring via the SCCS (except as specified below for the PRIM SW MACH FLG).
2. SYS TERM-OFF ID identifies the system terminal office for systems monitored via the switching entity. The code specified for this item must agree with the corresponding codes in Records 54 and 94 for the systems being monitored via the ESS switch.
3. SW MACH TYPE identifies the type of switching machine or intelligent frame being entered. It must be one of the following: DACS, DS, DCT, 1ESS, 1A ESS, OR 2B ESS.
4. PRIM SW MACH FLG specifies whether the switching entity is to be used at the exclusive source of monitoring in a multi-entity office. If the flag is set to YES only, the one Record 40 can be entered and all CGAs in the terminal office should be connected to this switching entity. Duplicate assignment testing will be applied to the subsequent Record 41 entries resulting in a more accurate data base. Data received over the SCCS data link for other switching entities associated with the same terminal office will be ignored by TCAS. The PRIM SW MACH FLG does not apply to DACS or D5 frames.

Fig. 28—Table 40 Switch Machine Definition (Notes)

	ITEM (LABEL-ITEM NAME)	POS	CHR	RQD	CDE	PDS	DAT
	DA BS ACTN CD	01	01	Y	F		
	41	02	02	Y	F		
1	SCCS-OFF ID	04	11	Y	P25	P40	
2	SW MACH ID	15	11	Y	P40	P40	
3	SNPT	26	04	Y	F		
4	MOND BAY	30	10	Y	V		Y
5	UNIT/SHLF	40	04	Y	V		Y
6	POS	44	2	N	F		Y
7	SD	46	1	N	F		Y
8	TERM/RPTR FLG	47	1	Y	F		

NOTES:

1. One record is required for each scan point assignment associated with the switching machines defined by Record 40 entries.
2. SCCS-OFF ID, SW MACH, and SNPT identify a scan point of an ESS switch for monitoring provided via the SCCS. Scan points must be provided in the range 0-1023.
3. MOND BAY, UNIT/SHLF, POS, and SD identify the monitored equipment. If monitoring a system terminal, only MOND BAY and UNIT/SHLF need to be specified and the TERM/RPTR FLG should be T. If a repeater is to be monitored, MOND BAY, UNIT/SHLF, POS, and SD should be specified and the TERM/RPTR FLG should be R.
4. The duplicate assignment testing is only provided if the ESS switch has been identified as the primary switching machine in Record 40.

Fig. 29—Table 41 Scan Point Assignment (Notes)

	ITEM (LABEL-ITEM NAME)	POS	CHR	RQD	CDE	PDS	DAT
	DA BS ACTN CD 43	01 02	01 02	Y Y	F F		
1 2	TASC – OFF ID STATION NO.	04 15	11 03	Y Y	P25 F	P37	
3 4	REM ID SYS TERM-OFF ID	18 29	11 11	Y Y	V P25		Y Y

NOTES:

1. One Record is required for each TASC remote in a TASC network which is to be used by TCAS for telemetry operations.
2. TASC OFF ID and STATION NO. uniquely identify a TASC remote. The TASC OFF ID identifies a specific TASC network and must have been defined via a Record 37 entry.
3. REMOTE ID is a TCAS identifier used to reference the remote defined by the TASC OFF ID and the STATION NO.
4. SYS TERM-OFF ID identifies the office for which the remote is providing direct hard-wired monitoring and must have been defined via a Record 25 entry.

Fig. 30—Table 43 TASC Remote Identification (Notes)

	ITEM (LABEL-ITEM NAME)	POS	CHR	RQD	CDE	PDS	DAT
	DA BS ACTN CD	01	01	Y	F		
	44	02	02	Y	F		
1	SCCS-OFF ID	04	11	Y	P25	P40	
2	SW MACH	15	11	Y	P40	P40	
3	DACS DGRP	26	03	Y	F		
4	TERM BAY	29	10	Y	V		Y
5	TERM UNIT	39	04	Y	V		Y

NOTES:

1. One record is required for each DACS frame digroup assignment. This assignment is required for monitoring via the SCCS link.
2. SCCS-OFF ID, SW MACH, and DACS DGRP identify a digroup in a DACS frame for assignment. The SW MACH must have been specified as DACS in Record 40 entry.
3. TERM BAY and TERM UNIT specify the location of the DACS frame within the office. The codes specified for these items must agree with the corresponding codes in Records 54/94 for the system being monitored.

Fig. 31—Table 44 DACS Digroup Assignment (Notes)

TPA729875

	ITEM (LABEL-ITEM NAME)	POS	CHR	RQD	CDE	PDS	DAT
	DA BS ACTN CD	01	01	Y	F		
	45	02	02	Y	F		
1	SCCS-OFF ID	04	11	Y	P25	P40	
2	SW MACH	15	11	Y	P40	P40	
3	D5 DGRP	26	04	Y	F		
4	TERM BAY	30	10	Y	V		Y
5	TERM UNIT	40	04	Y	V		Y

NOTES:

1. One record is required for each D5 frame digroup assignment. This assignment is required for monitoring via the SCCS link.
2. SCCS-OFF ID, SW MACH, and D5 DGRP identify a digroup in a D5 frame for assignment. The SW MACH must have been specified as D5 in Record 40 entry.
3. TERM BAY and TERM UNIT specify the location of the D5 frame within the office. The codes specified for these items must agree with the corresponding codes in Records 54/94 for the system being monitored.

Fig. 32—Table 45 D5 Frame Digroup Assignment (Notes)

	ITEM (LABEL-ITEM NAME)	POS	CHR	RQD	CDE	PDS	DAT
	DA BS ACTN CD 50	01 02	01 02	Y Y	F F		
1 2 3 4	SYS DESIG SYS TYPE END A-OFF ID END Z-OFF ID	04 09 15 26	05 06 11 11	Y Y Y Y	V V P25 P25		
5 6 7	SYS CONT-OFF ID DIG SIG LEV SYS PRIORITY	37 48 52	11 04 02	Y N N	P25 F F		

NOTES:

1. The record 50 series (50-59) are used with the SLR method of data base implementation for T-carrier systems. One appropriate record set is required for each system.
2. SYS DESIG, SYS TAPE, END A-OFF ID, and END Z-OFF ID identify the system.
3. SYS CONT-OFF ID identifies the office responsible for sectionalization, restoration and periodic maintenance.
4. DIG SIG LEV identifies whether the system is T1 (DS1), T1C (DS1C), etc. This item is optional but defaults to DS1 if not provided.
5. SYS PRIORITY is an optional item and specifies a trouble case priority in the event of a failure of the system.

Fig. 33—Table 50 System Identification (Notes)

	ITEM (LABEL-ITEM NAME)	POS	CHR	RQD	CDE	PDS	DAT
	DA BS ACTN CD 51	01 02	01 02	Y Y	F F		
1 2 3 4	SYS DESIG SYS TYPE END A-OFF ID END Z-OFF ID	04 09 15 26	05 06 11 11	Y Y Y Y	P50 P50 P25 P25	P50 P50 P50 P50	
5 6 7 8 9 10 11	AREA AREA-MI AREA AREA-MI AREA AREA-MI TOT-MI	37 42 47 52 57 62 67	05 05 05 05 05 05 05	N N N N N N N	V F V F V F F		

NOTES:

1. AREA and AREA-MI specify the mileage of the system route in an area. Up to three areas may be provided.
2. TOT-MI specifies the total mileage of the system route.

Fig. 34—Table 51 System Area Mileage—Optional (Notes)

	ITEM (LABEL-ITEM NAME)	POS	CHR	RQD	CDE	PDS	DAT
	DA BS ACTN CD	01	01	Y	F		
	52	02	02	Y	F		
1	SYS DESIG	04	05	Y	P50	P50	
2	SYS TYPE	09	06	Y	P50	P50	
3	END A-OFF ID	15	11	Y	P25	P50	
4	END Z-OFF ID	26	11	Y	P25	P50	
5	CKT ORD NO	37	18	Y	V		Y
6	EFF-DATE	55	08	N	F		
7	ISS NO	63	02	N	F		

NOTES:
1. CKT ORD NO is the circuit order number associated with the system and must be unique.
2. EFF-DATE and ISS NO are optional items usually provided on SLRs.

Fig. 35—Table 52 System Circuit Order Data—Optional (Notes)

	ITEM (LABEL-ITEM NAME)	POS	CHR	RQD	CDE	PDS	DAT
	DA BS ACTN CD	01	01	Y	F		
	53	02	02	Y	F		
1	SYS DESIG	04	05	Y	P50	P50	
2	SYS TYPE	09	06	Y	P50	P50	
3	END A-OFF ID	15	11	Y	P25	P50	
4	END Z-OFF ID	26	11	Y	P25	P50	
5	ISS-DATE	37	08	N	F		
6	ISSD BY-INTLS	45	03	N	F		
7	ENGRD BY-INTLS	48	03	N	F		

NOTE: ISS-DATE, ISSD BY INTLS, and ENGRD BY-INTLS are optional items usually provided on SLRs.

Fig. 36—Table 53 System Issue Data—Optional (Notes)

	ITEM (LABEL-ITEM NAME)	POS	CHR	RQD	CDE	PDS	DAT
	DA BS ACTN CD	01	01	Y	F		
	54	02	02	Y	F		
1	SYS DESIG	04	05	Y	P50	P50	
2	SYS TYPE	09	06	Y	P50	P50	
3	END A-OFF ID	15	11	Y	P25	P50	
4	END Z-OFF ID	26	11	Y	P25	P50	
5	SYS-END	37	01	Y	F		
6	SYS TERM-OFF ID	38	11	Y	P25		Y
7	SYS TERM-BAY	49	10	Y	V		Y
8	SYS TERM-UNIT	59	04	Y	V		Y
9	TERM TYPE	63	10	N	F		

NOTES:

1. SYS END and SYS TERM-OFF ID identify the A or Z system terminal and name the corresponding terminal office. The OFF ID may differ with that specified in the system identification. The code must agree, however, with the corresponding code specified in Record 28, Record 39 or Record 40, depending on the method of monitoring.
2. SYS TERM-BAY and -UNIT specify the terminal equipment location within the office. The codes specified for these items must agree with the corresponding codes specified in Record 02 or Record 41 depending on the method or monitoring. This data is required and must be unique for local offices. It is optional for foreign offices.
3. TERM TYPE specifies the terminal equipment type. The first four characters must be compatible with standard common language codes for terminals.

Fig. 37—Table 54 System Terminal (Notes)

	ITEM (LABEL-ITEM NAME)	POS	CHR	RQD	CDE	PDS	DAT
	DA BS ACTN CD	01	01	Y	F		
	55	02	02	Y	F		
1	SYS DESIG	04	05	Y	P50	P50	
2	SYS TYPE	09	06	Y	P50	P50	
3	END A-OFF ID	15	11	Y	P25	P50	
4	END Z-OFF ID	26	11	Y	P25	P50	
5	SYS-END	37	01	Y	F		
6	SYS TERM-OFF ID	38	11	Y	P25		
7	BK TERM ASSY-BAY	49	10	Y	V		
8	BK TERM ASSY-SHLF	59	04	Y	V		
9	BK TERM ASSY POS	63	02	Y	F		

NOTES:

1. SYS-END and SYS TERM-OFF ID are as specified in Record 54.
2. BK TERM ASSY-BAY, -SHLF, and BK TERM ASSY POS specify the bank terminating assembly in the office.

Fig. 38—Table 55 System Bank Terminating Assembly—Optional (Notes)

	ITEM (LABEL-ITEM NAME)	POS	CHR	RQD	CDE	PDS	DAT
	DA BS ACTN CD 56	01 02	01 02	Y Y	F F		
1 2 3 4	SYS DESIG SYS TYPE END A-OFF ID END Z-OFF ID	04 09 15 26	05 06 11 11	Y Y Y Y	P50 P50 P25 P25	P50 P50 P50 P50	
5 6	SYS-END SYS TERM-OFF ID	37 38	01 11	Y Y	F P25		
7 8 9	DSX-BAY DSX-SHLF DSX POS	49 59 63	10 04 02	Y N N	V V F		

NOTES:

1. SYS-END and SYS TERM-OFF ID are as specified in Record 54.
2. DSX-BAY, -SHLF, and DSX POS specify the terminal DSX location within the office.

Fig. 39—Table 56 System Terminal DSX—Optional (Notes)

	ITEM (LABEL-ITEM NAME)	POS	CHR	RQD	CDE	PDS	DAT
	DA BS ACTN CD 57	01 02	01 02	Y Y	F F		
1 2 3 4	SYS DESIG SYS TYPE END A-OFF ID END Z-OFF ID	04 09 15 26	05 06 11 11	Y Y Y Y	P50 P50 P25 P25	P50 P50 P50 P50	
5 6 7	SPN TERM A-OFF ID SPN TERM Z-OFF ID SPN TERM-END	37 48 59	11 11 01	Y Y Y	P25 P25 F		
8 9 10	DSX-BAY DSX-SHLF DSX POS	60 70 74	10 04 02	N N N	V V F		

NOTES:

1. SPN TERM A-OFF ID, SPN TERM Z-OFF ID, and SPN TERM-END are as specified in Record 58.
2. DSX-BAY, -SHLF, and DSX POS identify the office repeater DSX location at the specified span line terminal office.

Fig. 40—Table 57 System Office Repeater DSX—Optional (Notes)

	ITEM (LABEL-ITEM NAME)	POS	CHR	RQD	CDE	PDS	DAT
	DA BS ACTN CD	01	01	Y	F		
	58	02	02	Y	F		
1	SYS DESIG	04	05	Y	P50	P50	
2	SYS TYPE	09	06	Y	P50	P50	
3	END A-OFF ID	15	11	Y	P25	P50	
4	END Z-OFF ID	26	11	Y	P25	P50	
5	SPN TERM A-OFF ID	37	11	Y	P25		Y
6	SPN TERM Z-OFF ID	48	11	Y	P25		Y
7	SPN TERM-END	59	01	Y	F		Y
8	OFF RPTR-BAY	60	10	Y	V		Y
9	OFF RPTR-SHLF	70	04	Y	V		Y
10	OFF RPTR POS	74	02	Y	F		Y
11	OFF RPTR SD	76	01	Y	F		Y

NOTES:

1. SPN TERM A-OFF ID and SPN TERM Z-OFF ID identify a span line in the system route. Routing continuity is required for adjacent span lines. Also, for local system terminal offices, the codes for the first and last span line terminal offices in the route must agree with those specified for the A and Z system terminal offices specified in Record 54, respectively.
2. SPN TERM-END specifies the A or Z span line terminal office.
3. OFF RPTR-BAY, -SHLF, OFF RPTR POS, and OFF RPTR SD specify the office repeater location at the span line terminal office. This data is required and must be unique for local offices. It is optional for foreign offices.

Fig. 41—Table 58 System Office Repeater (Notes)

	ITEM (LABEL-ITEM NAME)	POS	CHR	RQD	CDE	PDS	DAT
	DA BS ACTN CD	01	01	Y	F		
	59	02	02	Y	F		
1	SYS DESIG	04	05	Y	P50	P50	
2	SYS TYPE	09	06	Y	P50	P50	
3	END A-OFF ID	15	11	Y	P25	P50	
4	END Z-OFF ID	26	11	Y	P25	P50	
5	SPN TERM A-OFF ID	37	11	Y	P25	P26	Y
6	SPN TERM Z-OFF ID	48	11	Y	P25	P26	Y
7	DIRN	59	02	Y	F	P26	Y
8	CA DESIG	61	05	Y	P26	P26	Y
9	CA PR	66	05	N	F		
10	MH RPTR CSE	71	04	Y	V		Y
11	MH RPTR SKT	75	02	Y	F		Y
12	MH RPTR SD	77	01	Y	F		Y

NOTES:

1. SPN TERM A-OFF ID, and SPN TERM Z-OFF ID identify a span line in the system route as specified in Record 58.
2. DIRN specifies the AZ or ZA direction or transmission with respect to the span line terminal office.
3. CA DESIG and CA PR identify the cable and pair assignments for the transmission path specified by DIRN. The cable designation must be defined in a Record 26 for the span line terminal offices and direction or transmission.
4. MH RPTR CSE, MH RPTR SKT, and MH RPTR SD specify the manhole repeater assignment for the transmission path specified by DIRN. The assignment must be unique within the cable.

Fig. 42—Table 59 System Cable and Manhole Repeater (Notes)

	ITEM (LABEL-ITEM NAME)	POS	CHR	RQD	CDE	PDS	DAT
	DA BS ACTN CD	01	01	Y	F		
	DF	02	02	Y	F		
1	LC-SYS DESIG	04	05	Y	P50	P50	Y
2	LC-SYS TYPE	09	06	Y	P50	P50	Y
3	LC END A-OFF ID	15	11	Y	P25	P50	Y
4	LC END Z-OFF ID	26	11	Y	P25	P50	Y
5	HC END A-OFF ID	37	11	Y	P25	P50	
6	HC END Z-OFF ID	48	11	Y	P25	P50	
7	DIRN	59	02	Y	F		
8	HC-SYS DESIG	61	05	Y	P50	P50	
9	HC-SYS TYPE	66	06	Y	P50	P50	
10	HC-CHAN	72	05	Y	V		

NOTES:

1. LC-SYS DESIG, -SYS TYPE, LC END A-OFF ID, and LC END Z-OFF ID identify an LC (low-capacity) digital system. The digital signal level of the LC system must be less than that of the HC system. Once an LC system is assigned to a HC system channel, all subsequent LC systems assigned must be at the same digital signal level; i.e., channel assignments must be homogeneous.
2. DIRN is a fixed code and must be specified as BW for both ways.
3. HC-SYS DESIG, -SYS TYPE, HC END A-OFF ID, and HC END Z-OFF ID identify a high-capacity digital system. The digital signal level of the HC system as specified in Record 50 must be greater than DS1.
4. HC-CHAN identifies the HC system channel for assignment. One DF Record is required for each HC system channel assigned to an LC system. The number of records cannot exceed the capacity of the HC system.

Fig. 43—Table DF Derived Facility Assignment (Notes)

	ITEM (LABEL-ITEM NAME)	POS	CHR	RQD	CDE	PDS	DAT
	DA BS ACTN CD 60	01 02	01 02	Y Y	F F		
1 2 3 4	SYS DESIG SYS TYPE END A-OFF ID END Z-OFF ID	04 09 15 26	05 06 11 11	Y Y Y Y	V V P25 P25		
5 6 7	PTCH LN CONT-OFF ID DIG SIG LEV PTCH LN CL	37 48 52	11 04 01	Y N Y	P25 F F		

NOTES:

1. The record 60 series (60-69) are used for patch lines with the SLR method of data base implementation. One appropriate record set is required for each patch line.
2. Patch line records are identical to system records, on a one-to-one basis, with the following two exceptions.
   (a) PTCH LN CL in Record 60 replaces SYS PRIORITY in Record 50.
   (b) Records 54 thru 56, which specify system terminal equipment assignments, are not applicable to patch lines and are omitted in the Record 60 series.

Fig. 44—Table 60 Patch Line Identification (Notes)

	ITEM (LABEL-ITEM NAME)	POS	CHR	RQD	CDE	PDS	DAT
	DA BS ACTN CD	01	01	Y	F		
	61	02	02	Y	F		
1	SYS DESIG	04	05	Y	P60	P60	
2	SYS TYPE	09	06	Y	P60	P60	
3	END A-OFF ID	15	11	Y	P25	P60	
4	END Z-OFF ID	26	11	Y	P25	P60	
5	AREA	37	05	N	V		
6	AREA-MI	42	05	N	F		
7	AREA	47	05	N	V		
8	AREA-MI	52	05	N	F		
9	AREA	57	05	N	V		
10	AREA-MI	62	05	N	F		
11	TOT-MI	67	05	N	F		

Fig. 45—Table 61 Patch Line Mileage—Optional

	ITEM (LABEL-ITEM NAME)	POS	CHR	RQD	CDE	PDS	DAT
	DA BS ACTN CD	01	01	Y	F		
	62	02	02	Y	F		
1	SYS DESIG	04	05	Y	P60	P60	
2	SYS TYPE	09	06	Y	P60	P60	
3	END A-OFF ID	15	11	Y	P25	P60	
4	END Z-OFF ID	26	11	Y	P25	P60	
5	CKT OAD NO	37	18	Y	F		Y
6	EFF-DATE	55	08	N	V		
7	ISS NO	63	02	N	F		

Fig. 46—Table 62 Patch Line Circuit Order Data—Optional

	ITEM (LABEL-ITEM NAME)	POS	CHR	RQD	CDE	PDS	DAT
	DA BS ACTN CD 63	01 02	01 02	Y Y	F F		
1 2 3 4	SYS DESIG SYS TYPE END A-OFF ID END Z-OFF ID	04 09 15 26	05 06 11 11	Y Y Y Y	P60 P60 P25 P25	P60 P60 P60 P60	
5 6 7	ISS-DATE ISSD BY-INTLS ENGRD BY-INTLS	37 45 48	08 03 03	N N N	F F F		

Fig. 47—Table 63 Patch Line Issue Data—Optional

	ITEM (LABEL-ITEM NAME)	POS	CHR	RQD	CDE	PDS	DAT
	DA BS ACTN CD 67	01 02	01 02	Y Y	F F		
1 2 3 4	SYS DESIG SYS TYPE END A-OFF ID END Z-OFF ID	04 09 15 26	05 06 11 11	Y Y Y Y	P60 P60 P25 P25	P60 P60 P60 P60	
5 6 7	SPN TERM A-OFF ID SPN TERM Z-OFF ID SPN TERM-END	37 48 59	11 11 01	Y Y Y	P25 P25 F		
8 9 10	DSX-BAY DSX-SHELF DSX POS	60 70 74	10 04 02	N N N	V V F		

Fig. 48—Table 67 Patch Line Office Repeater DSX—Optional

	ITEM (LABEL-ITEM NAME)	POS	CHR	RQD	CDE	PDS	DAT
	DA BS ACTN CD 68	01 02	01 02	Y Y	F F		
1 2 3 4	SYS DESIG SYS TYPE END A-OFF ID END Z-OFF ID	04 09 15 26	05 06 11 11	Y Y Y Y	P60 P60 P25 P25	P60 P60 P60 P60	
5 6 7	SPN TERM A-OFF ID SPN TERM Z-OFF ID SPN TERM-END	37 48 59	11 11 01	Y Y Y	P25 P25 F		Y Y Y
8 9 10 11	OFF RPTR-BAY OFF RPTR-SHLF OFF RPTR POS OFF RPTR SD	60 70 74 76	10 04 02 01	Y Y Y Y	V V F F		Y Y Y Y

NOTE:
The codes specified for the office repeater must agree with those in the corresponding entry as specified in Record 03 for the repeater being monitored by a MLSI.

Fig. 49—Table 68 Patch Line Office Repeater—Optional (Note)

	ITEM (LABEL-ITEM NAME)	POS	CHR	RQD	CDE	PDS	DAT
	DA BS ACTN CD	01	01	Y	F		
	69	02	02	Y	F		
1	SYS DESIG	04	05	Y	P60	P60	
2	SYS TYPE	09	06	Y	P60	P60	
3	END A-OFF ID	15	11	Y	P25	P60	
4	END Z-OFF ID	26	11	Y	P25	P60	
5	SPN TERM A-OFF ID	37	11	Y	P25	P26	Y
6	SPN TERM Z-OFF ID	48	11	Y	P25	P26	Y
7	DIRN	59	02	Y	F	P26	Y
8	CA DESIG	61	05	Y	P26	P26	Y
9	CA PR	66	05	N	F		
10	MH RPTR CSE	71	04	Y	V		Y
11	MH RPTR SKT	75	02	Y	F		Y
12	MH RPTR SD	77	01	Y	F		Y

Fig. 50—Table 69 Patch Line Cable and Manhole Repeater—Optional

	ITEM (LABEL-ITEM NAME)	POS	CHR	RQD	CDE	PDS	DAT
	DA BS ACTN CD 82	01 02	01 02	Y Y	F F		
1 2 3	OFF ID DSX-BAY DSX-SHLF	04 15 25	11 10 04	Y Y Y	P25 V V		
4 5 6 7 8 9	OFF RPTR-EQPT TYPE SLOT GR OFF RPTR-BAY OFF RPTR-SHLF OFF RPTR POS OFF RPTR SD	29 33 35 45 49 51	04 02 10 04 02 01	Y Y Y Y N N	F F V V F F		

NOTES:

1. OFF ID, DSX-BAY, and -SHLF define a repeater DSX panel.
2. OFF RPTR-EQPT TYPE specifies the first four characters or common language equipment codes for repeaters. Applicable codes are TIMR for 206 and 220, and TIST for 201.
3. SLOT GP specifies whether the record is for the lower shelf, upper shelf, or slot 25. The codes LS and US identify the lower and upper repeater shelves, respectively. The code 25 identifies the 25th slot for dedicated 201 repeaters.
4. OFF RPTR-BAY and -SHLF identify the applicable repeater shelf. OFF RPTR POS and OFF RPTR SD must also be included when identifying the 25th repeater.

Fig. 51—Table 82 Repeater DSX Assignment (Notes)

	ITEM (LABEL-ITEM NAME)	POS	CHR	RQD	CDE	PDS	DAT
	DA BS ACTN CD	01	01	Y	F		
	90	02	02	Y	F		
1	SYS DESIG	04	05	Y	V		
2	SYS TYPE	09	06	Y	V		
3	END A-OFF ID	15	11	Y	P25		
4	END Z-OFF ID	26	11	Y	P25		
5	SYST CONT-OFF ID	37	11	Y	P25		
6	DIG SIG LEV	48	04	N	F		
7	PTCH LN CL	52	01	N	F		

NOTES:

1. The Record 90 series (90-99) are used with the EFA method of data base implementation for T-carrier systems and patch lines. EFA is applicable to T1 and T1C level systems.
2. SYS DESIG, SYS TYPE, END A-OFF ID, and END Z-OFF ID identify the system.
3. SYS CONT-OFF ID identifies the office responsible for sectionalization, restoration and maintenance.
4. DIG SIG LEV identifies whether the system is T1 (DS1) or T1C (DS1C). This item is optional but defaults to DS1 if not provided.
5. PTCH LN CL is left blank for systems. It must be provided for patch lines and identifies a patch line as a maintenance line (M), backbone (B), etc.

Fig. 52—Table 90 System Identification (Notes)

	ITEM (LABEL-ITEM NAME)	POS	CHR	RQD	CDE	PDS	DAT
	DA BS ACTN CD 91	01 02	01 02	Y Y	F F		
1 2 3 4	SYS DESIG SYS TYPE END A-OFF ID END Z-OFF ID	04 09 15 26	05 06 11 11	Y Y Y Y	P90 P90 P25 P25	P90 P90 P90 P90	
5 6 7 8 9 10 11 12 13	TOT-MI AREA AREA-MI AREA AREA-MI AREA AREA-MI DSGNR-INTLS SYS PRIORITY	37 42 47 52 57 62 67 72 75	05 05 05 05 05 05 05 03 02	N N N N N N N N N	F V F V F V F F F		

NOTES:
1. TOT-MI specifies the total mileage of the system route.
2. AREA and AREA-MI specify the mileage of the system route in an area. Up to three areas may be provided.
3. DSGNR-INTLS is an optional item.
4. SYS PRIORITY is an optional item and specifies a trouble case priority in the event of a failure of the system.

Fig. 53—Table 91 System Administrative Data (Notes)

	ITEM (LABEL-ITEM NAME)	POS	CHR	RQD	CDE	PDS	DAT
	DA BS ACTN CD 92	01 02	01 02	Y Y	F F		
1	HC-SYS DESIG	04	05	Y	P90	P90	
2	HC-SYS TYPE	09	06	Y	P90	P90	
3	HC END A-OFF ID	15	11	Y	P25	P90	
4	HC END Z-OFF ID	26	11	Y	P25	P90	
5	HC-CHAN	37	05	Y	V		
6	LC-SYS DESIG	42	05	Y	P90	P90	Y
7	LC-SYS TYPE	47	06	Y	P90	P90	Y
8	LC END A-OFF ID	53	11	Y	P25	P90	Y
9	LC END Z-OFF ID	64	11	Y	P25	P90	Y

NOTES:

1. HC-SYS DESIG, -SYS TYPE, HC END A-OFF ID, and HC END OFF-Z ID identify a high-capacity digital system. The digital signal level of the HC system as specified in Record 90 must be greater than DS1.
2. HC-CHAN identifies the HC system channel for assignment. One Record 92 is required for each HC system channel assigned to an LC system. The number of records cannot exceed the capacity of the HC system.
3. LC-SYS DESIG, -SYS TYPE, LC END A-OFF ID, and LC END Z-OFF ID identify a low-capacity digital system. The digital signal of the LC system must be less than that of the HC system. Once an LC system is assigned to an HC system channel, all subsequent LC systems assigned must be at the same digital signal level; i.e., channel assignments must be homogeneous.

Fig. 54—Table 92 System Channel Assignment (Notes)

	ITEM (LABEL-ITEM NAME)	POS	CHR	RQD	CDE	PDS	DAT
	DA BS ACTN CD 93	01 02	01 02	Y Y	F F		
1 2 3	OFF ID BAY UNIT/SHLF	04 15 25	11 10 04	Y Y Y	P25 V V		
4	EQPT TYPE	29	10	Y	F		

NOTES:

1. One record is required for each terminal unit, repeater shelf, and DSX shelf in the network.
2. OFF ID, BAY, and UNIT identify a terminal unit.
3. OFF ID, BAY, and SHLF identify a repeater or DSX shelf.
4. EQPT TYPE specifies the equipment type. The first four characters of the code used must be consistent with common language equipment type designations.

Fig. 55—Table 93 Equipment Type Definition (Notes)

	ITEM (LABEL-ITEM NAME)	POS	CHR	RQD	CDE	PDS	DAT
	DA BS ACTN CD	01	01	Y	F		
	94	02	02	Y	F		
1	SYS TERM-OFF ID	04	11	Y	P25	P93	
2	SYS TERM-BAY	15	10	Y	P93	P93	
3	SYS TERM-UNIT	25	04	Y	P93	P93	
4	SYS DESIG	29	05	Y	P90	P90	Y
5	SYS TYPE	34	06	Y	P90	P90	Y
6	END A-OFF ID	40	11	Y	P25	P90	Y
7	END Z-OFF ID	51	11	Y	P25	P90	Y

NOTES:

1. One record is required for each terminal assignment.
2. SYS TERM-OFF ID, -BAY, and -UNIT identify a terminal unit for assignment. The codes must agree with the corresponding codes specified by a Record 93 entry and the equipment type must be applicable to terminal units.
3. SYS DESIG, SYS TYPE, END A-OFF ID, and END Z-OFF ID identify the system assigned to the terminal unit. The system must have been previously defined by a Record 90 entry and not have been defined as a patch line.
4. The first eight characters of the SYS TERM-OFF ID must agree with the first eight characters of the END A-OFF ID or END Z-OFF ID for the system.

Fig. 56—Table 94 System Terminal Assignment (Notes)

	ITEM (LABEL-ITEM NAME)	POS	CHR	RQD	CDE	PDS	DAT
	DA BS ACTN CD	01	01	Y	F		
	95	02	02	Y	F		
1	OFF ID	04	11	Y	P25	P93 P93	Y
2	DSX-BAY	15	10	Y	P93	P93	
3	DSX-SHLF	25	04	Y	P93	P93	
4	DSX POS	29	02	Y	F		
5	SYS TERM-BAY	31	10	Y	V	P93	Y
6	SYS TERM-UNIT	41	04	Y	V	P93	Y
7	MLDM-CHAN	45	05	N	V		

NOTES:

1. One record is required for each terminal DSX assignment.
2. OFF ID, DSX-BAY, -SHLF, and DSX POS identify a terminal DSX for assignment. The first three codes must agree with the corresponding codes specified by a Record 93 entry and the Record 93 equipment type must be applicable to DSX. The DSX shelf must not have been previously assigned to a span as a repeater DSX.
3. SYS TERM-BAY and -UNIT specify a terminal unit for assignment to a terminal DSX. The codes must agree with the corresponding codes specified by a Record 93 entry and the Record 93 equipment type must be applicable to terminals.
4. The MLDM-CHAN field is left blank for T1 terminal to DSX assignments and for the assignment of the HC side of a terminal muldem to a DSX. The MLDM-CHAN is specified when a Record 95 is used to specify the assignment of the LC side of a terminal muldem to a DSX. One record is required for each LC channel.

Fig. 57—Table 95 Terminal DSX Assignment (Notes)

	ITEM (LABEL-ITEM NAME)	POS	CHR	RQD	CDE	PDS	DAT
	DA BS ACTN CD	01	01	Y	F		
	96	02	02	Y	F		
1	SPN DESIG	04	11	Y	V		Y
2	SPN TERM A-OFF ID	15	11	Y	P25	P26 P93	
3	SPN TERM Z-OFF ID	26	11	Y	P25	P26	
4	CA DESIG	37	05	Y	P26	P26	Y
5	CA PR	42	05	N	F		
6	MH RPTR CSE	47	04	Y	V		Y
7	MH RPTR SD	51	01	Y	F		Y
8	DSX-BAY	52	10	N	V	P93	Y
9	DSX-SHLF	62	04	N	V	P93	Y
10	DED RPTR FLG	66	01	N	F		

NOTES:

1. A span is defined in TCAS as a group of 25 bidirectional span slots. SPN DESIG is a span identifier which must be unique between a pair of offices.
2. SPN TERM A-OFF ID and SPN TERM Z-OFF ID define the span office pair and specify a direction of transmission between A and Z. Two Record 96s are required to specify the cable facilities in each direction and the DSX at each span terminal.
3. CA DESIG, CA PR, MH RPTR CSE, and MH RPTR SD specify the interoffice facilities for the specified direction of transmission. CA PR identifies the first pair in the 25-pair complement.
4. DSX-BAY and -SHLF identify the DSX shelf at the A span end. The codes for these items must have been previously specified by a Record 93 and the equipment type must be applicable for DSX.
5. DED RPTR FLG specifies whether the office repeaters are grouped in dedicated arrangements or randomly assigned to the span slots. A dedicated arrangement has the set of repeaters on a pair of shelves assigned to the 25 span slots in a uniform sequential manner. If the DED RPTR FLG is set to Y (standard) or X (special), two entries are required as specified in Table 97 for defining the repeater shelves. (One additional entry is required for the 25th 201-type repeater.) If the flag is set to N, 25 separate entries are required as specified in Table 99. Separate DED RPTR FLGs are required for each end of the span.

Fig. 58—Table 96 Cable Span Assignment (Notes)

	ITEM (LABEL-ITEM NAME)	POS	CHR	RQD	CDE	PDS	DAT
	DA BS ACTN CD	01	01	Y	F		
	97	02	02	Y	F		
1	SPN DESIG	04	11	Y	P96	P96	
2	SPN TERM A-OFF ID	15	11	Y	P25	P96 P93	Y Y
3	SPN TERM Z-OFF ID	26	11	Y	P25	P96	
4	SLOT GR	37	02	Y	F		
5	OFF RPTR-BAY	39	10	Y	P93	P93	Y Y
6	OFF RPTR-SHLF	49	04	Y	P93	P93	Y Y
7	OFF RPTR POS	53	02	N	F		Y
8	OFF RPTR SD	55	01	N	F		Y

NOTES:

1. SPN DESIG, SPN TERM A-OFF ID, and SPN TERM Z-OFF ID are as specified in Table 96. SLOT GP defines a slot group (all the slots associated with a repeater shelf) for dedicated repeater arrangements. The codes LS and US identify the lower and upper repeater shelves, respectively. The codes MS or 25 identify the 25th slot for dedicated 201 repeaters.
2. OFF RPTR-BAY and -SHLF identify an office repeater shelf. These codes must agree with those specified by a Record 93 entry and the equipment type must be applicable for office repeaters. OFF RPTR POS and OFF RPTR SD additionally define a specific repeater for the 25th slot for 201 repeaters.
3. Record 97 data will not be accepted unless the dedicated repeater flag as defined in Record 96 is specified as a Y (standard) or X (special).

Fig. 59—Table 97 Repeater Span Assignment (Notes)

	ITEM (LABEL-ITEM NAME)	POS	CHR	RQD	CDE	PDS	DAT
	DA BS ACTN CD	01	01	Y	F		
	98	02	02	Y	F		
1	SPN DESIG	04	11	Y	P96	P96	
2	SPN TERM A-OFF ID	15	11	Y	P25	P96	
3	SPN TERM Z-OFF ID	26	11	Y	P25	P96	
4	SLOT GR	37	02	Y	F		
5	SYS DESIG	39	05	Y	P90	P90	Y
6	SYS TYPE	44	06	Y	P90	P90	Y
7	END A-OFF ID	50	11	Y	P25	P90	Y
8	END Z-OFF ID	61	11	Y	P25	P90	Y

NOTES:

1. One record is required for each system to span slot assignment.
2. SPN DESIG, SPN TERM A-OFF ID, and SPN TERM Z-OFF ID are as defined in Record 96 except that the order of the span terminal offices is unimportant.
3. SLOT defines a specific bidirectional span slot in the range of 1-25.
4. SYS DESIG, SYS TYPE, END A-OFF ID, and END Z-OFF ID identify the system or patch line assigned to the span slot. The system or patch line must have been previously defined by a Record 90 entry.

Fig. 60—Table 98 System Span Slot Assignment (Notes)

TPA722004

	ITEM (LABEL-ITEM NAME)	POS	CHR	RQD	CDE	PDS	DAT
	DA BS ACTN CD	01	01	Y	F		
	99	02	02	Y	F		
1	SPN DESIG	04	11	Y	P96	P96	
2	SPN TERM A-OFF ID	15	11	Y	P25	P96 P93	
3	SPN TERM Z-OFF ID	26	11	Y	P25	P96	
4	SLOT	37	02	Y	F		
5	OFF RPTR-BAY	39	10	Y	P93	P93	Y
6	OFF RPTR-SHLF	49	04	Y	P93	P93	Y
7	OFF RPTR POS	53	02	Y	F		Y
8	OFF RPTR SD	55	02	Y	F		Y

NOTES:

1. SPN DESIG, SPN TERM A-OFF ID, and SPN TERM Z-OFF ID are specified in Record 96. SLOT defines specific span slot in the range 1-25.
2. OFF RPTR-BAY, -SHLF, OFF RPTR POS, and OFF RPTR SD define an undedicated office repeater at OFF A for assignment to a span slot. The office repeater shelf must have been previously defined by a Record 93 entry and the equipment type must be applicable for office repeaters.
3. Record 99 data is only applicable and will only be accepted when the dedicated repeater flag is specified as N (nondedicated).

Fig. 61—Table 99 Repeater Span Slot Assignment (Notes)

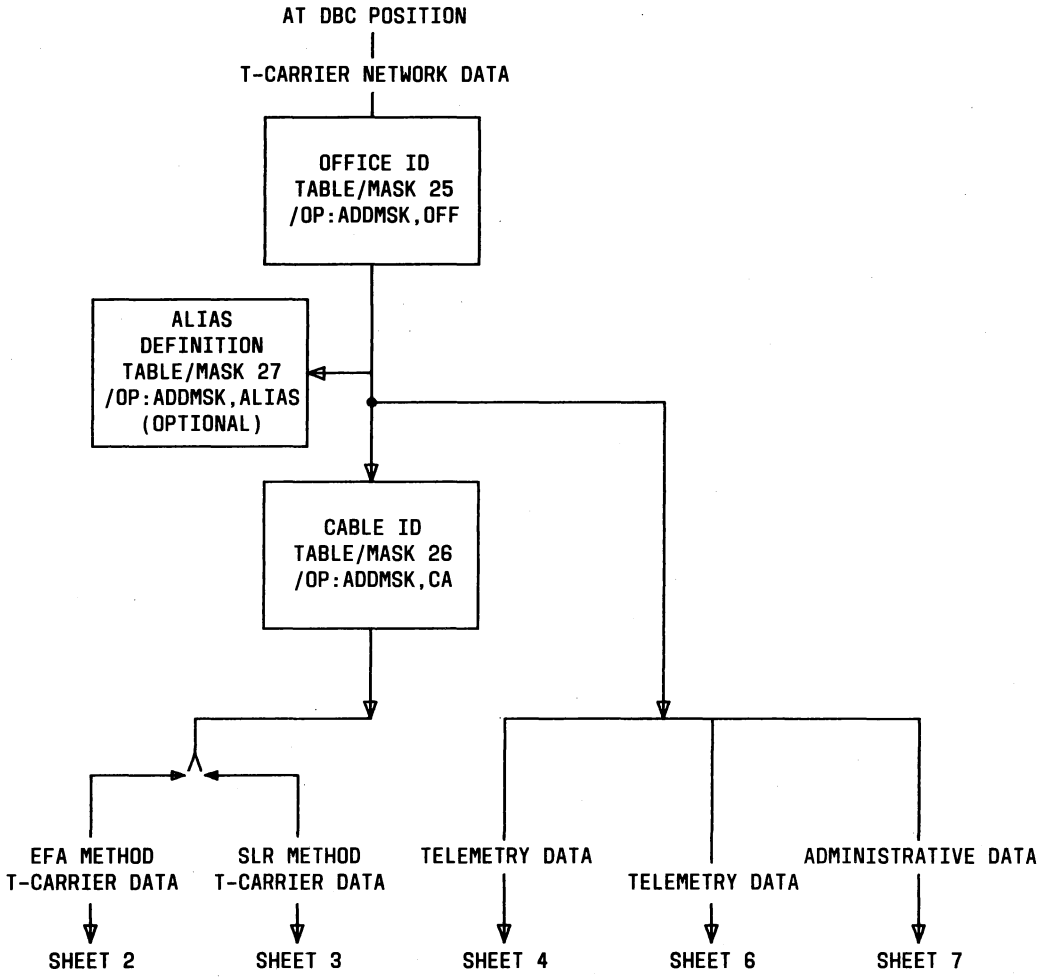

Fig. 62—Hierarchial Order of Data Entry (Sheet 1 of 7)

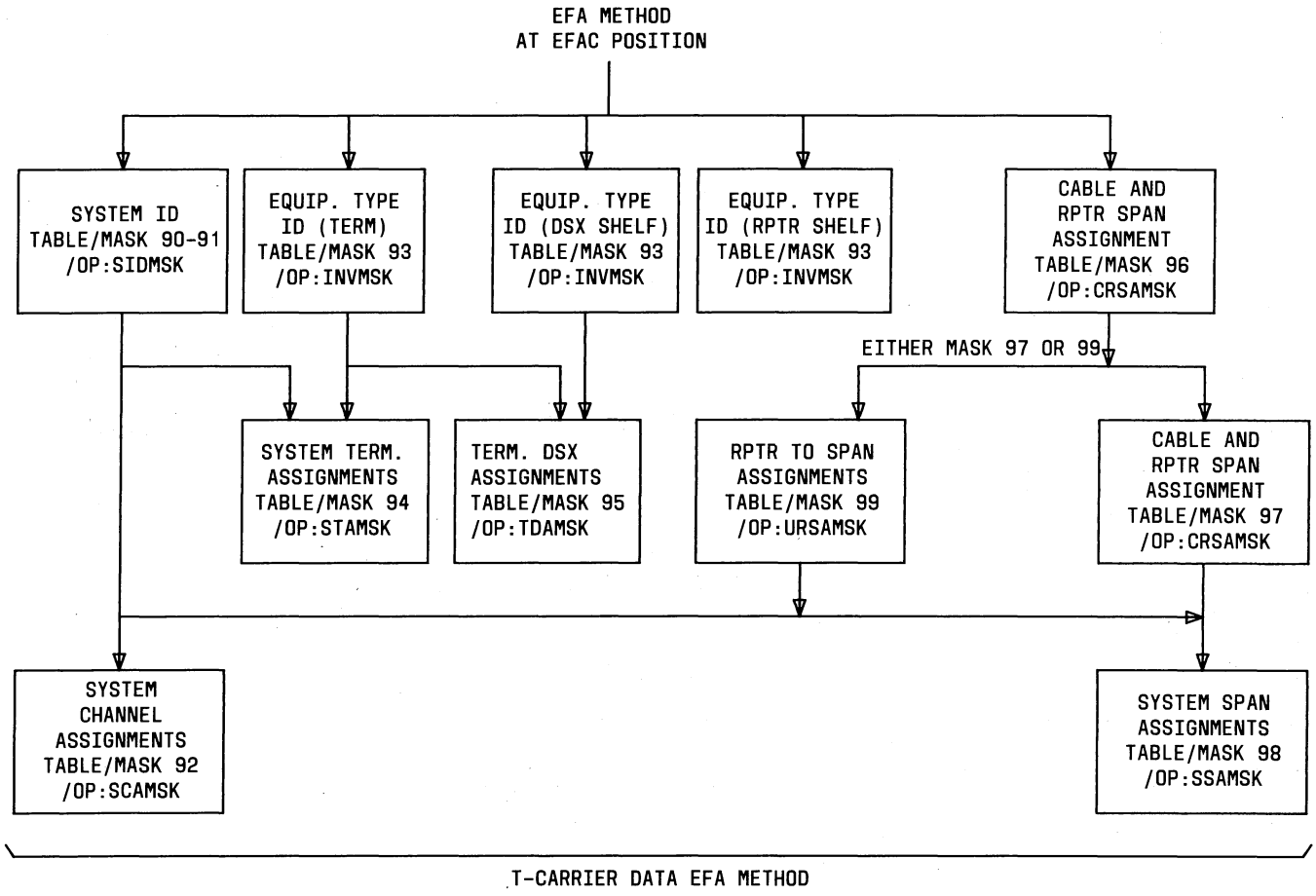

Fig. 62—Hierarchial Order of Data Entry (Sheet 2 of 7)

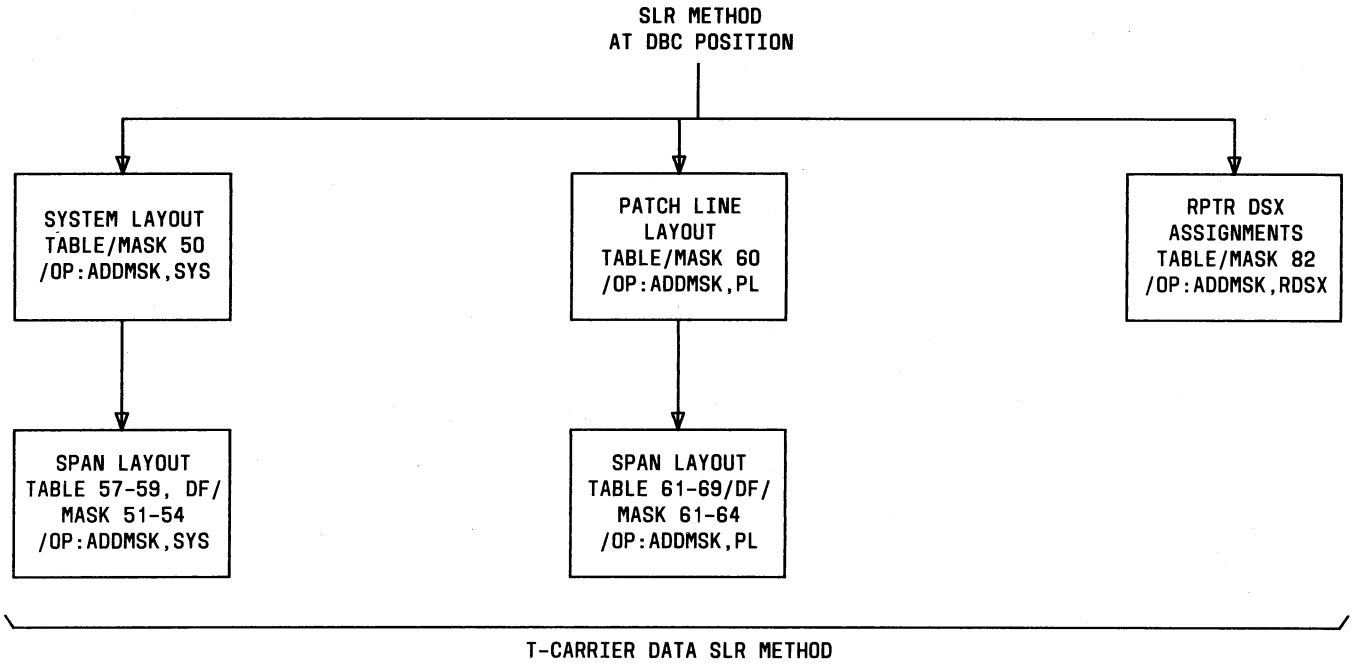

Fig. 62—Hierarchial Order of Data Entry (Sheet 3 of 7)

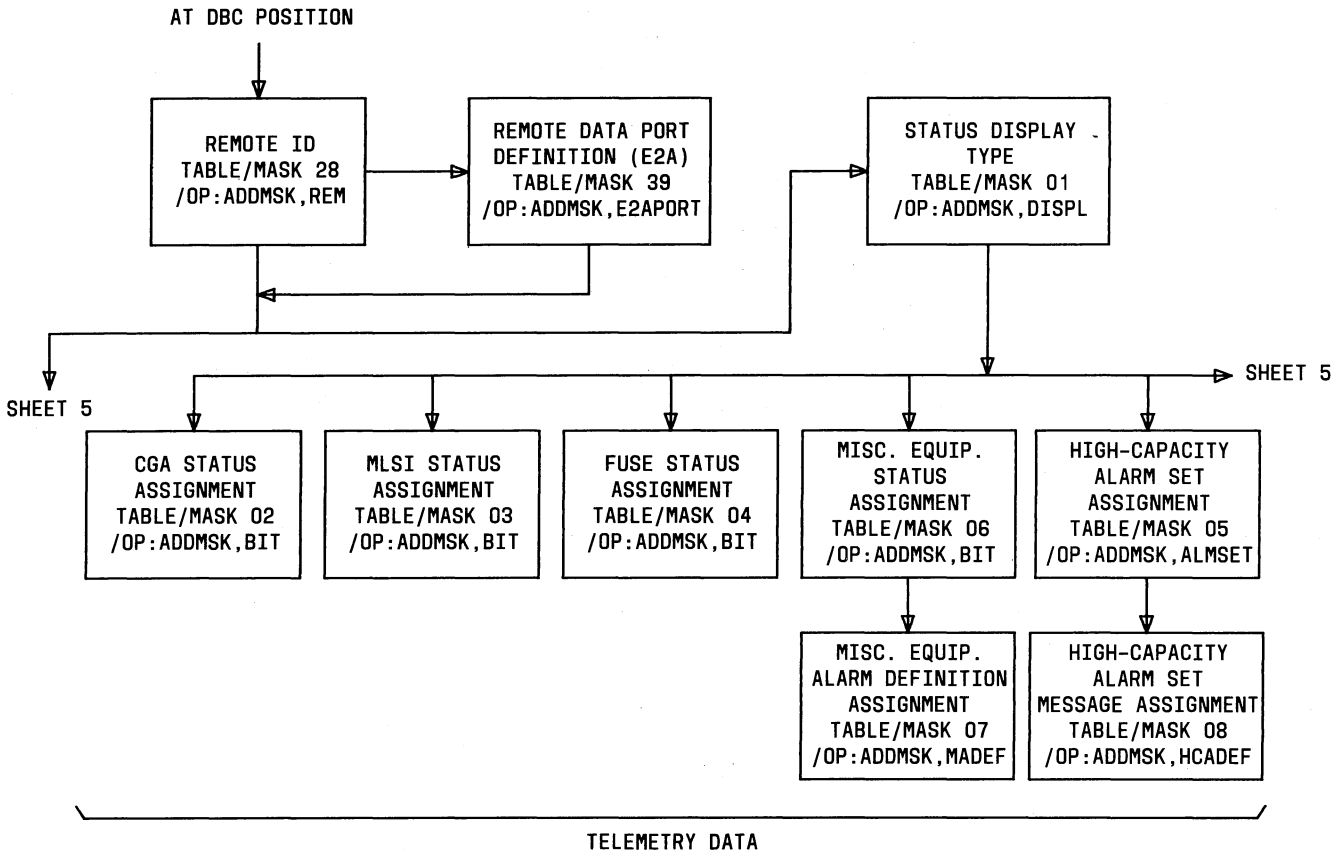

Fig. 62—Hierarchial Order of Data Entry (Sheet 4 of 7)

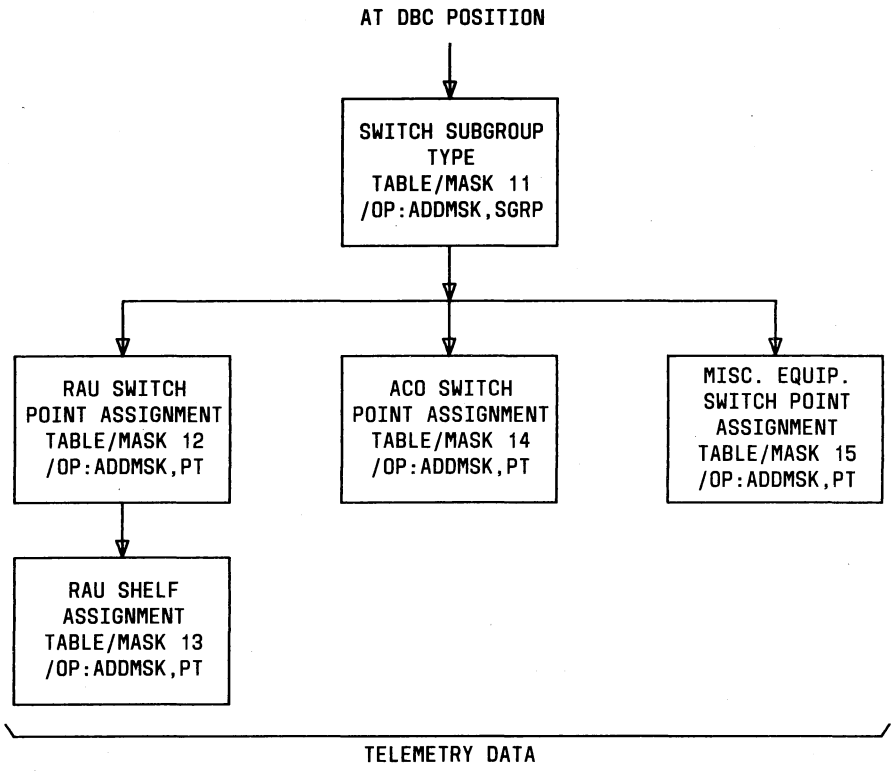

Fig. 62—Hierarchial Order of Data Entry (Sheet 5 of 7)

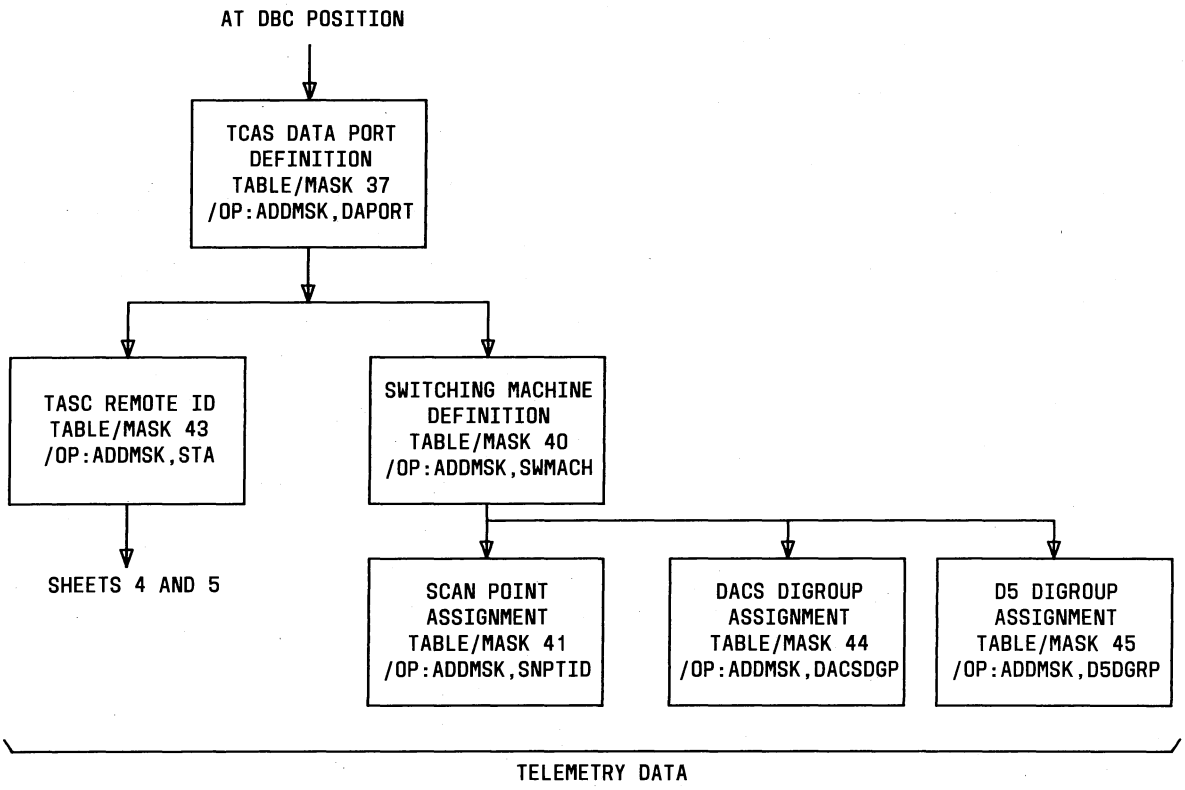

Fig. 62—Hierarchial Order of Data Entry (Sheet 6 of 7)

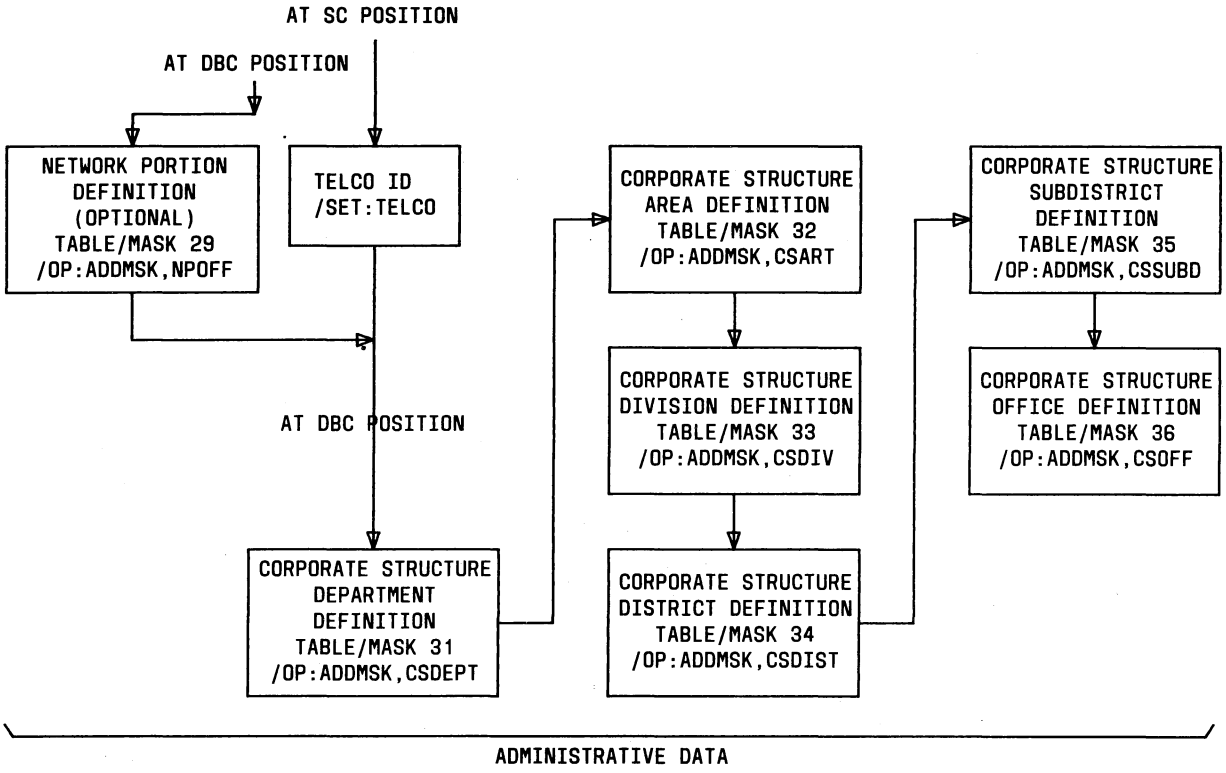

Fig. 62—Hierarchial Order of Data Entry (Sheet 7 of 7)

```
A50101 T1 ABCDCA01 WXYZCA11 ABCDCA01T0
A51101 T1 ABCDCA01 WXYZCA11 OPRBY7.0                    7.0
A52101 T1 ABCDCA01 WXYZCA11 2TF993       07-01-84 1
A53101 T1 ABCDCA01 WXYZCA11 05-15-84GRRGRR
A54101 T1 ABCDCA01 WXYZCA11 AABCDCA01   253.06    57
A55101 T1 ABCDCA01 WXYZCA11 AABCDCA01   237.44    6     2
A54101 T1 ABCDCA01 WXYZCA11 ZWXYZCA11   101.14    14
A55101 T1 ABCDCA01 WXYZCA11 ZWXYZCA11   108.10    3     3
A58101 T1 ABCDCA01 WXYZCA11 ABCDCA01    ABCKCA11 A237.44   6 1 2
A59101 T1 ABCDCA01 WXYZCA11 ABCDCA01    ABCKCA11 AZ504 007641 141
A59101 T1 ABCDCA01 WXYZCA11 ABCDCA01    ABCKCA11 ZA504 004641 142
A58101 T1 ABCDCA01 WXYZCA11 ABCDXA01    ABCKCA11 Z116.37   6   1 0
A58101 T1 ABCDCA01 WXYZCA11 ABCKCA01    WXYZCA11 A116.33   1   2 1
A59101 T1 ABCDCA01 WXYZCA11 ABCKCA01    WXYZCA11 AZ500 007787 3 1
A59101 T1 ABCDCA01 WXYZCA11 ABCKCA01    WXYZCA11 ZA500 004737 3 2
A58101 T1 ABCDCA01 WXYZCA11 ABCKCA01    WXYZCA11 Z108.10 3 3   1
```

Fig. 63—Example of T-Carrier System Layout Data in Magnetic-Tape Record Format

```
A25ABCDSTBD1   NYYYYN
A26ABCDSTBD1   ABCDSTBD   500   ABCDSTBD2   10
A54101   T1   ABCDSTBD1   ABCDSTBD5   AABCDSTBD1   101.15   3
```

Fig. 64—Examples of Data Record Entry for a Two-Span System Via Magnetic-Tape Record Format

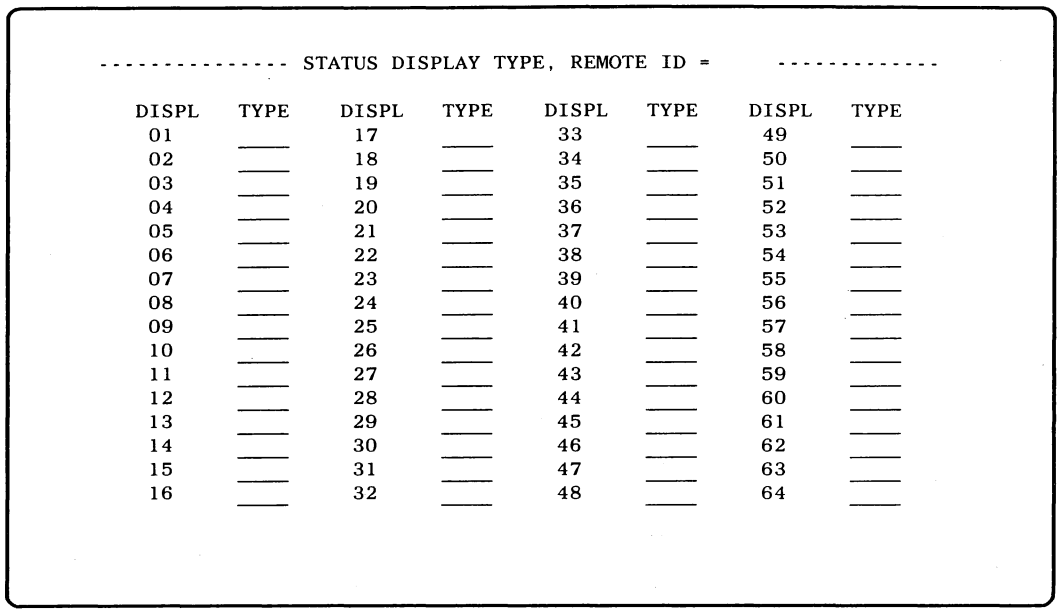

---------- STATUS DISPLAY TYPE, REMOTE ID = ----------

DISPL	TYPE	DISPL	TYPE	DISPL	TYPE	DISPL	TYPE
01	____	17	____	33	____	49	____
02	____	18	____	34	____	50	____
03	____	19	____	35	____	51	____
04	____	20	____	36	____	52	____
05	____	21	____	37	____	53	____
06	____	22	____	38	____	54	____
07	____	23	____	39	____	55	____
08	____	24	____	40	____	56	____
09	____	25	____	41	____	57	____
10	____	26	____	42	____	58	____
11	____	27	____	43	____	59	____
12	____	28	____	44	____	60	____
13	____	29	____	45	____	61	____
14	____	30	____	46	____	62	____
15	____	31	____	47	____	63	____
16	____	32	____	48	____	64	____

Fig. 65—Status Display Assignment (Mask 01) Record Format

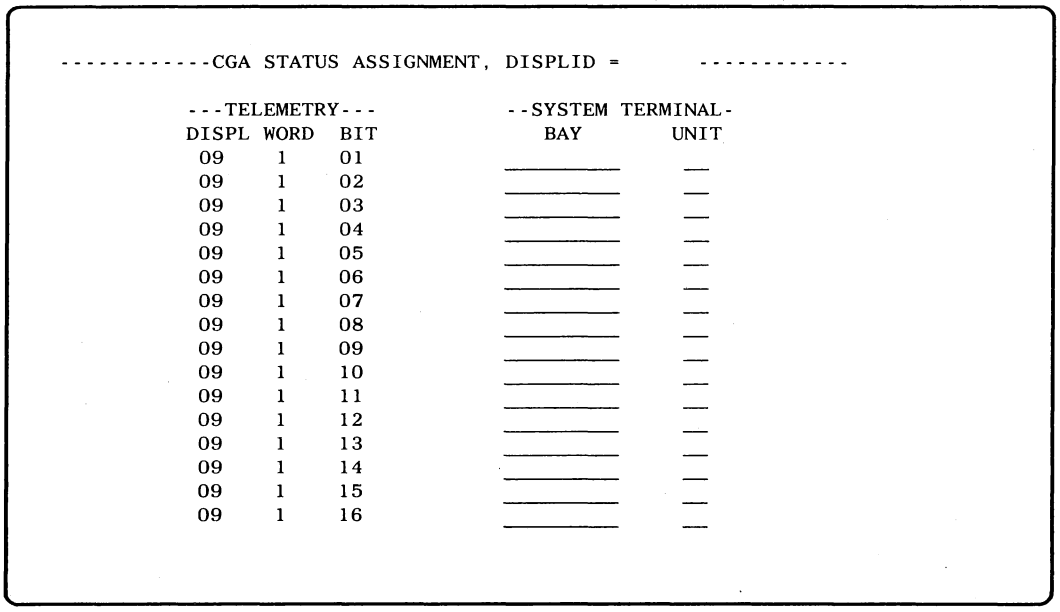

----------CGA STATUS ASSIGNMENT, DISPLID = ----------

---TELEMETRY---			--SYSTEM TERMINAL-	
DISPL	WORD	BIT	BAY	UNIT
09	1	01	_____	__
09	1	02	_____	__
09	1	03	_____	__
09	1	04	_____	__
09	1	05	_____	__
09	1	06	_____	__
09	1	07	_____	__
09	1	08	_____	__
09	1	09	_____	__
09	1	10	_____	__
09	1	11	_____	__
09	1	12	_____	__
09	1	13	_____	__
09	1	14	_____	__
09	1	15	_____	__
09	1	16	_____	__

Fig. 66—Carrier Group Alarm (CGA) Assignment (Mask 02)

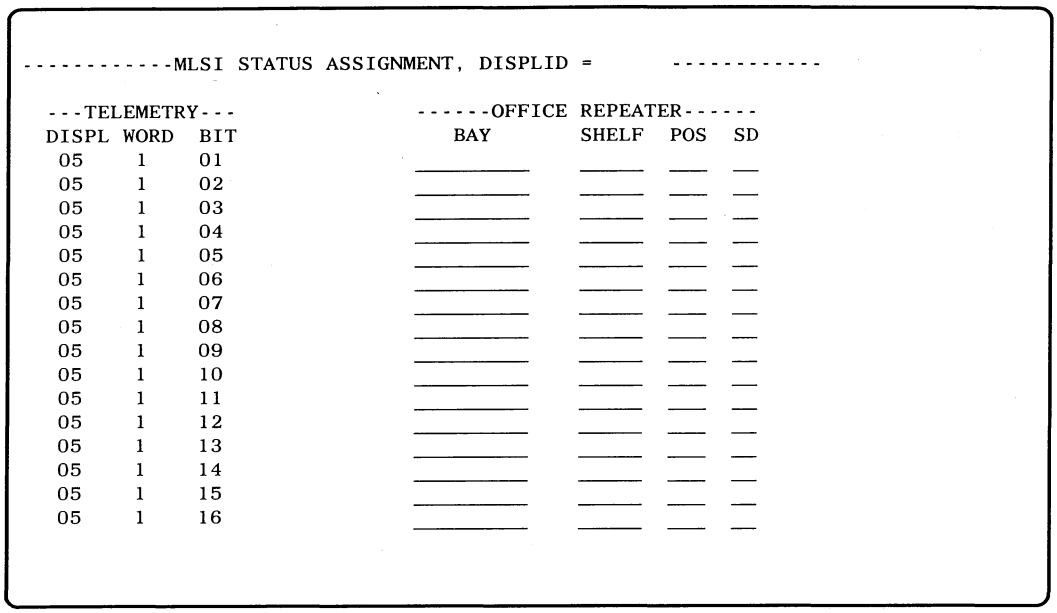

----------MLSI STATUS ASSIGNMENT, DISPLID = ----------

---TELEMETRY---			------OFFICE REPEATER------			
DISPL	WORD	BIT	BAY	SHELF	POS	SD
05	1	01	_____	_____	___	___
05	1	02	_____	_____	___	___
05	1	03	_____	_____	___	___
05	1	04	_____	_____	___	___
05	1	05	_____	_____	___	___
05	1	06	_____	_____	___	___
05	1	07	_____	_____	___	___
05	1	08	_____	_____	___	___
05	1	09	_____	_____	___	___
05	1	10	_____	_____	___	___
05	1	11	_____	_____	___	___
05	1	12	_____	_____	___	___
05	1	13	_____	_____	___	___
05	1	14	_____	_____	___	___
05	1	15	_____	_____	___	___
05	1	16	_____	_____	___	___

Fig. 67—Maintenance Line Status Indicator (MLSI) Assignment (Mask 03)

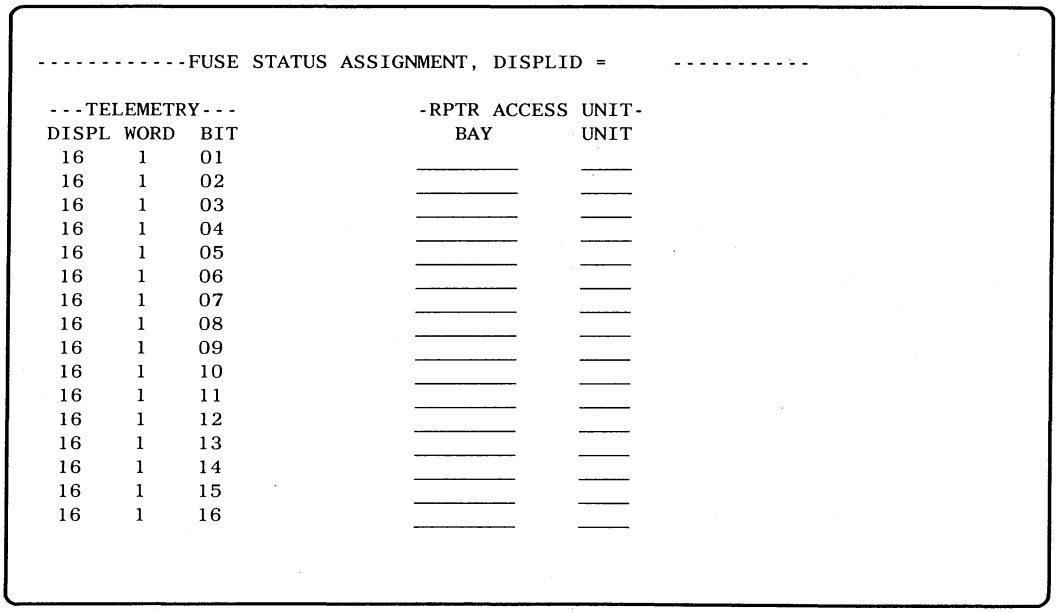

----------FUSE STATUS ASSIGNMENT, DISPLID = ----------

---TELEMETRY---			-RPTR ACCESS UNIT-	
DISPL	WORD	BIT	BAY	UNIT
16	1	01	_____	_____
16	1	02	_____	_____
16	1	03	_____	_____
16	1	04	_____	_____
16	1	05	_____	_____
16	1	06	_____	_____
16	1	07	_____	_____
16	1	08	_____	_____
16	1	09	_____	_____
16	1	10	_____	_____
16	1	11	_____	_____
16	1	12	_____	_____
16	1	13	_____	_____
16	1	14	_____	_____
16	1	15	_____	_____
16	1	16	_____	_____

Fig. 68—Fuse Status Assignment (Mask 04)

```
---------- HIGH CAPACITY ALARM SET ASSIGNMENT, DISPLID =     ------

 ---TELEMETRY---                 ----- HC ALARM SET ASSIGNMENT ----
 DISPL      WORD                  FRAME        P/U      FRAME     CONT
                                                FLAG      TYPE     DISPL
 01          1                   __________     _       ______    _______
 01          2                   __________     _       ______    _______
 01          3                   __________     _       ______    _______
 01          4                   __________     _       ______    _______
```

Fig. 69—High-Capacity Frame Alarm Set Assignment (Mask 05)

```
------------MISC EQPT STATUS ASSIGNMENT, DISPLID =      -------

 ---TELEMETRY---            --MISC EQUIPMENT--     HOLDING
 DISPL WORD  BIT              IDENTIFICATION         TIME
  17    1    01             ____________ ____      ________
  17    1    02             ____________ ____      ________
  17    1    03             ____________ ____      ________
  17    1    04             ____________ ____      ________
  17    1    05             ____________ ____      ________
  17    1    06             ____________ ____      ________
  17    1    07             ____________ ____      ________
  17    1    08             ____________ ____      ________
  17    1    09             ____________ ____      ________
  17    1    10             ____________ ____      ________
  17    1    11             ____________ ____      ________
  17    1    12             ____________ ____      ________
  17    1    13             ____________ ____      ________
  17    1    14             ____________ ____      ________
  17    1    15             ____________ ____      ________
  17    1    16             ____________ ____      ________
```

Fig. 70—Miscellaneous Equipment Status Assignment (Mask 06)

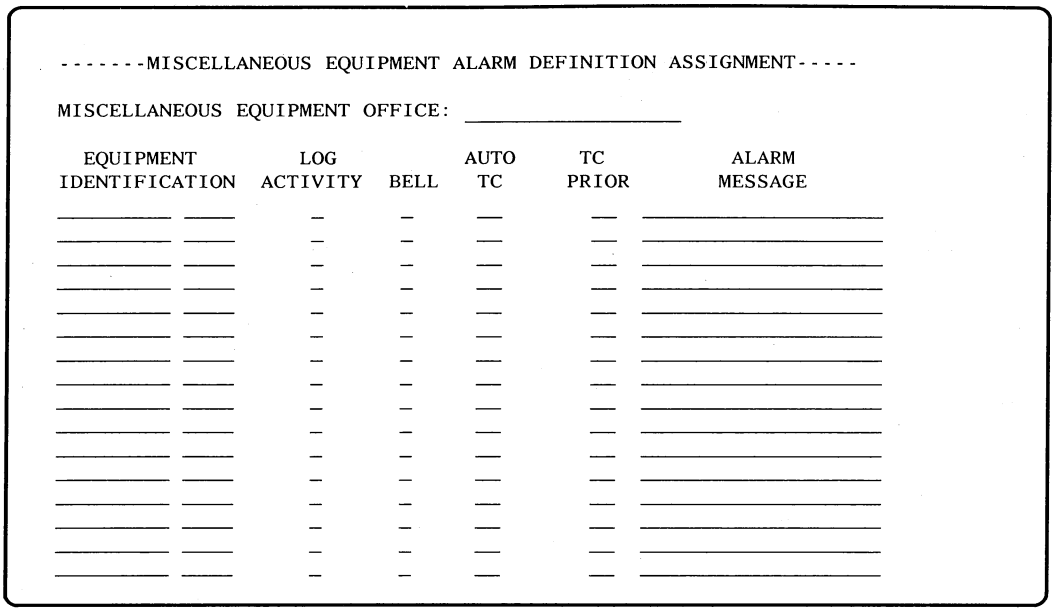

Fig. 71—Miscellaneous Equipment Alarm Message Assignment (Mask 07)

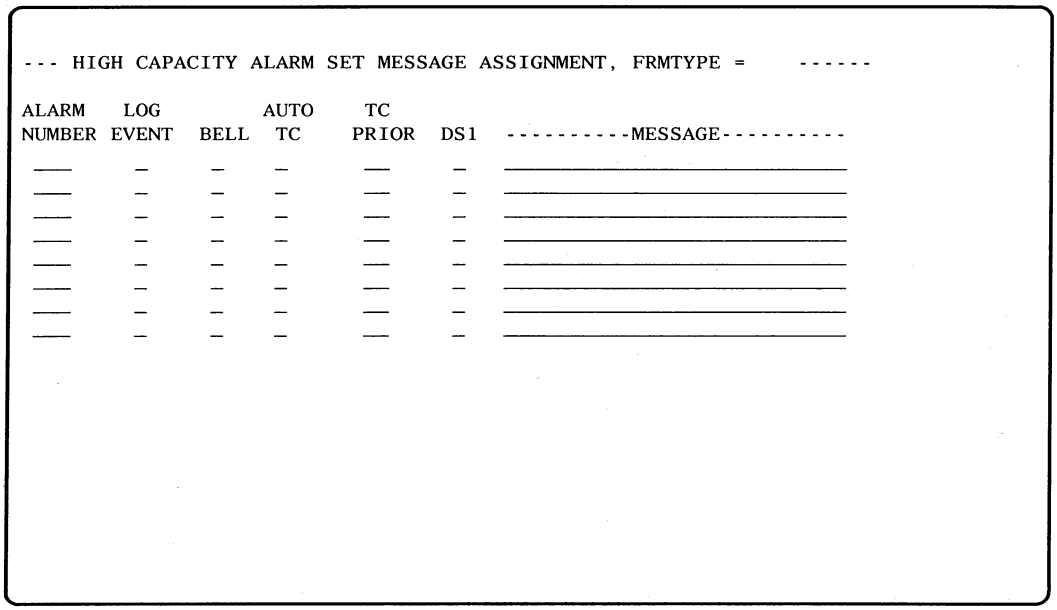

Fig. 72—High-Capacity Alarm Set Assignment Frame Type (Mask 08)

---------- SWITCH SUBGROUP TYPE, REMOTE ID = _____ --------

GROUP	SGRP	TYPE	GROUP	SGRP	TYPE	GROUP	SGRP	TYPE	GROUP	SGRP	TYPE
01	01		02	01		03	01		04	01	
01	02		02	02		03	02		04	02	
01	03		02	03		03	03		04	03	
01	04		02	04		03	04		04	04	
01	05		02	05		03	05		04	05	
01	06		02	06		03	06		04	06	
01	07		02	07		03	07		04	07	
01	08		02	08		03	08		04	08	
01	09		02	09		03	09		04	09	
01	10		02	10		03	10		04	10	
01	11		02	11		03	11		04	11	
01	12		02	12		03	12		04	12	
01	13		02	13		03	13		04	13	
01	14		02	14		03	14		04	14	
01	15		02	15		03	15		04	15	
01	16		02	16		03	16		04	16	

Fig. 73—Switch Subgroup Type (Mask 11)

---------- RAU SWITCH POINT ASSIGNMENT, SGRPID = ----

---TELEMETRY---			-RPTR ACCESS UNIT-	
GROUP	SGRP	POINT	BAY	UNIT
01	05	01		
01	05	02		
01	05	03		
01	05	04		
01	05	05		
01	05	06		
01	05	07		
01	05	08		
01	05	09		
01	05	10		
01	05	11		
01	05	12		
01	05	13		
01	05	14		
01	05	15		
01	05	16		

Fig. 74—RAU Switch Point Assignment (Mask 12)

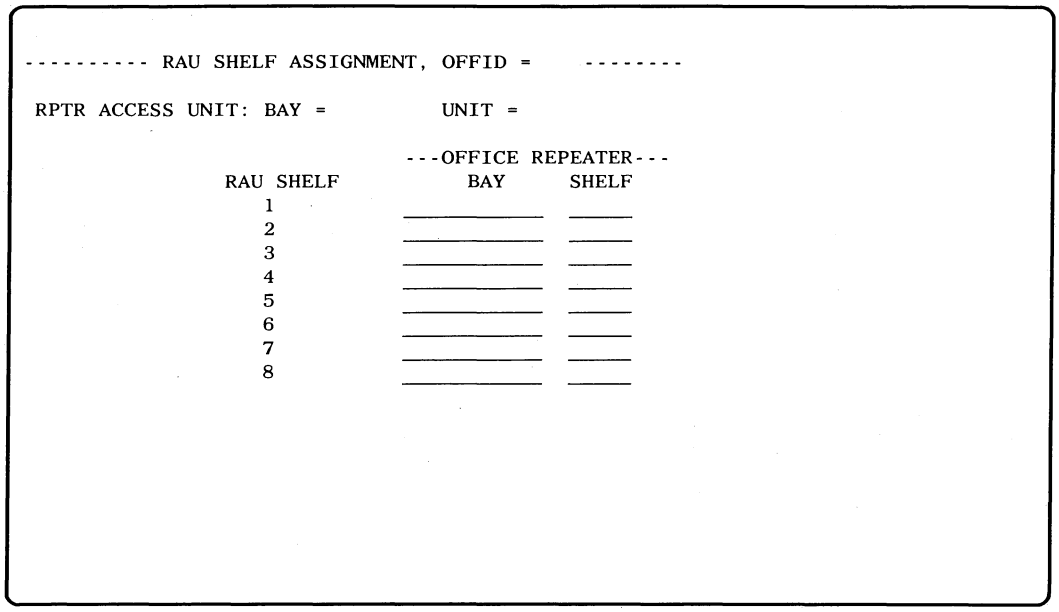

---------- RAU SHELF ASSIGNMENT, OFFID = --------

RPTR ACCESS UNIT: BAY = UNIT =

RAU SHELF	---OFFICE REPEATER--- BAY	SHELF
1		
2		
3		
4		
5		
6		
7		
8		

Fig. 75—RAU Shelf Assignment (Mask 13)

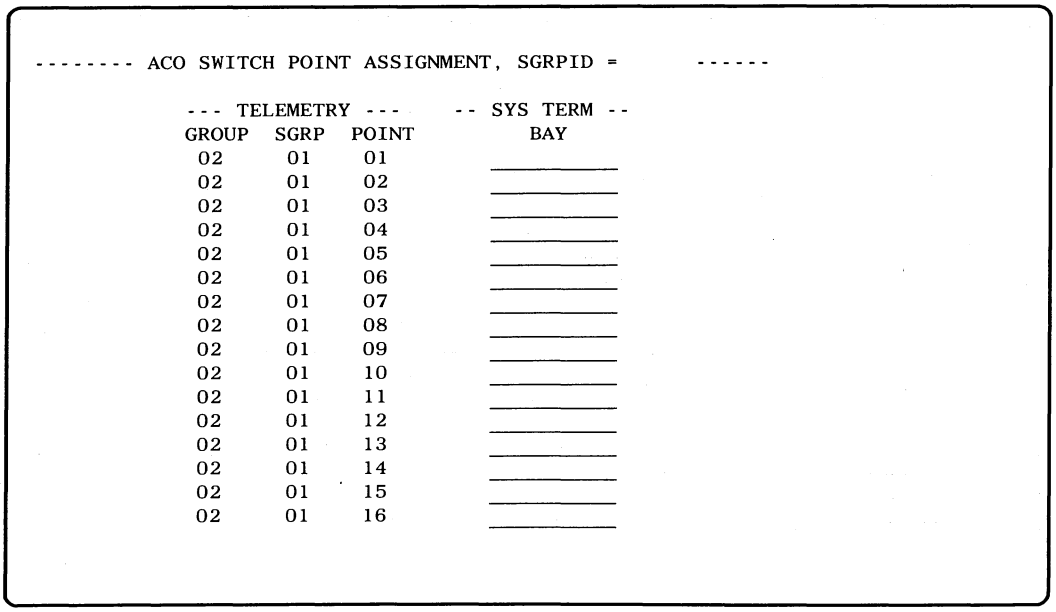

-------- ACO SWITCH POINT ASSIGNMENT, SGRPID = ------

--- TELEMETRY --- GROUP	SGRP	POINT	-- SYS TERM -- BAY
02	01	01	
02	01	02	
02	01	03	
02	01	04	
02	01	05	
02	01	06	
02	01	07	
02	01	08	
02	01	09	
02	01	10	
02	01	11	
02	01	12	
02	01	13	
02	01	14	
02	01	15	
02	01	16	

Fig. 76—ACO Switch Point Assignment (Mask 14)

```
------ MISC EQPT SWITCH POINT ASSIGNMENT SGRPID =       ------

            ---TELEMETRY---          --- MISC EQPT ---
            GROUP SGRP POINT          IDENTIFICATION
              01    02   01          ________  _______
              01    02   02          ________  _______
              01    02   03          ________  _______
              01    02   04          ________  _______
              01    02   05          ________  _______
              01    02   06          ________  _______
              01    02   07          ________  _______
              01    02   08          ________  _______
              01    02   09          ________  _______
              01    02   10          ________  _______
              01    02   11          ________  _______
              01    02   12          ________  _______
              01    02   13          ________  _______
              01    02   14          ________  _______
              01    02   15          ________  _______
              01    02   16          ________  _______
```

Fig. 77—Miscellaneous Equipment Switch Point Assignment (Mask 15)

```
------------------------OFFICE IDENTIFICATION--------------------------

                              TRCC ID =

     OFFICE      POP FOREIGN REPORTS FLAGS INDEX INPUT   ACO    CTRL
IDENTIFICATION   FLG OFFICE   DAILY  WKLY      TYPE     PMT'D  TCAS

_______________  ___ _______ _______ _____ ___________ _____  ____
_______________  ___ _______ _______ _____ ___________ _____  ____
_______________  ___ _______ _______ _____ ___________ _____  ____
_______________  ___ _______ _______ _____ ___________ _____  ____
_______________  ___ _______ _______ _____ ___________ _____  ____
_______________  ___ _______ _______ _____ ___________ _____  ____
_______________  ___ _______ _______ _____ ___________ _____  ____
_______________  ___ _______ _______ _____ ___________ _____  ____
_______________  ___ _______ _______ _____ ___________ _____  ____
_______________  ___ _______ _______ _____ ___________ _____  ____
_______________  ___ _______ _______ _____ ___________ _____  ____
_______________  ___ _______ _______ _____ ___________ _____  ____
_______________  ___ _______ _______ _____ ___________ _____  ____
```

Fig. 78—Office Identification (Mask 25)

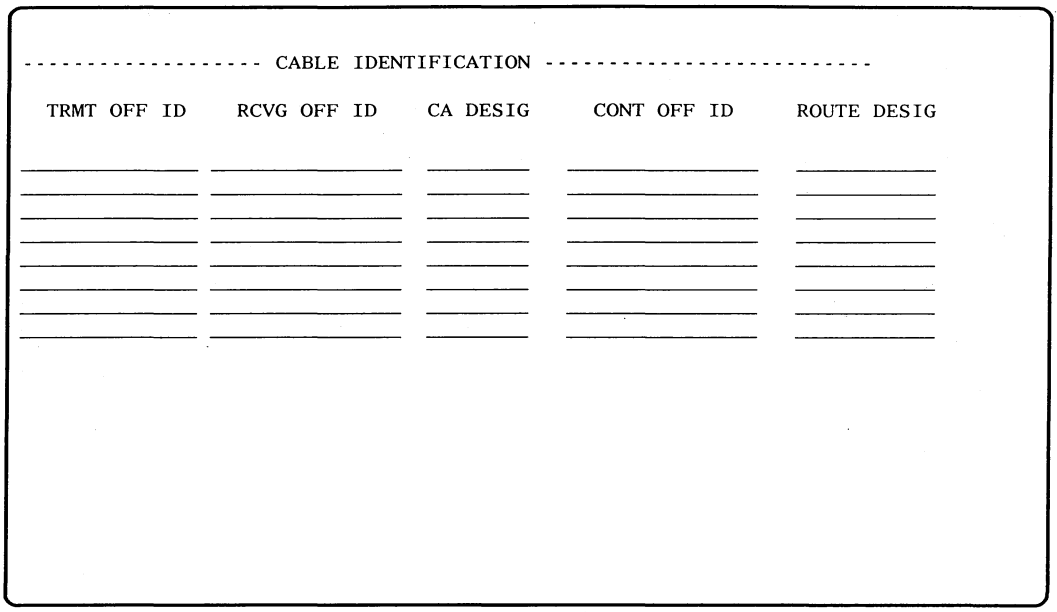

Fig. 79—Cable Identification (Mask 26)

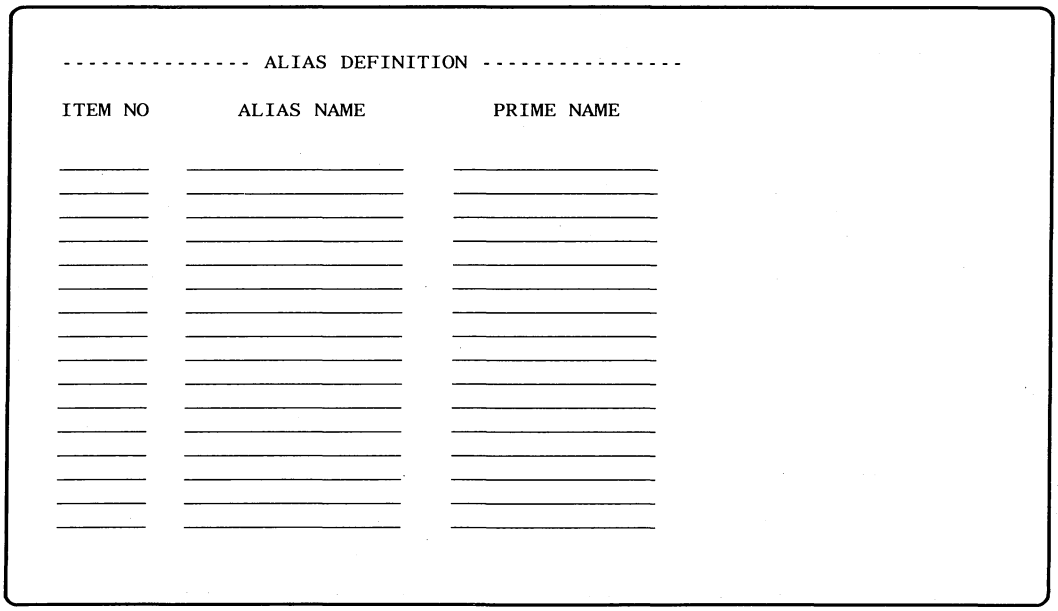

Fig. 80—Alias Definition (Mask 27)

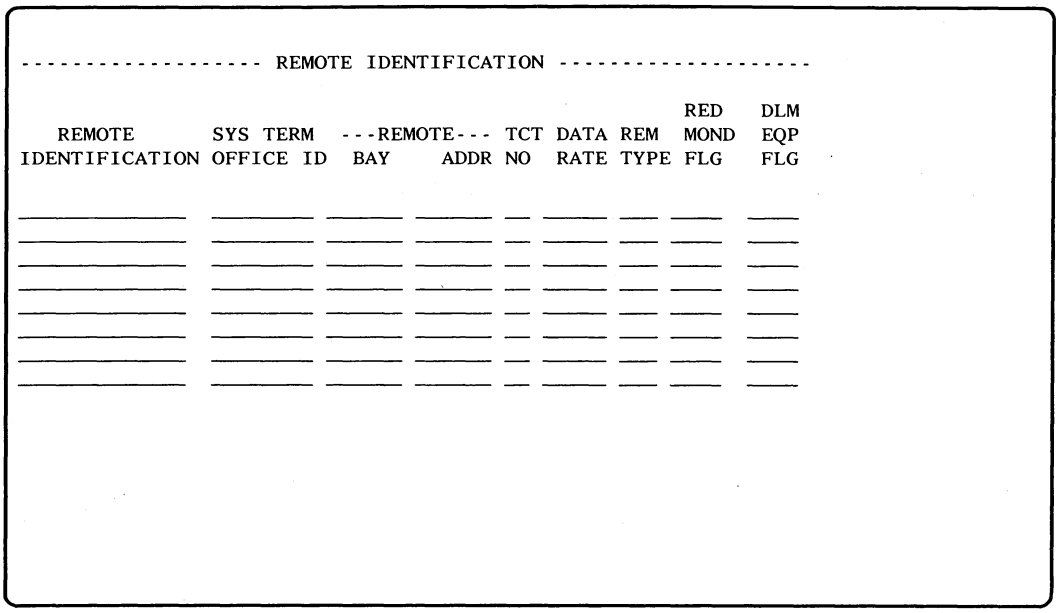

Fig. 81—Remote Identification (Mask 28)

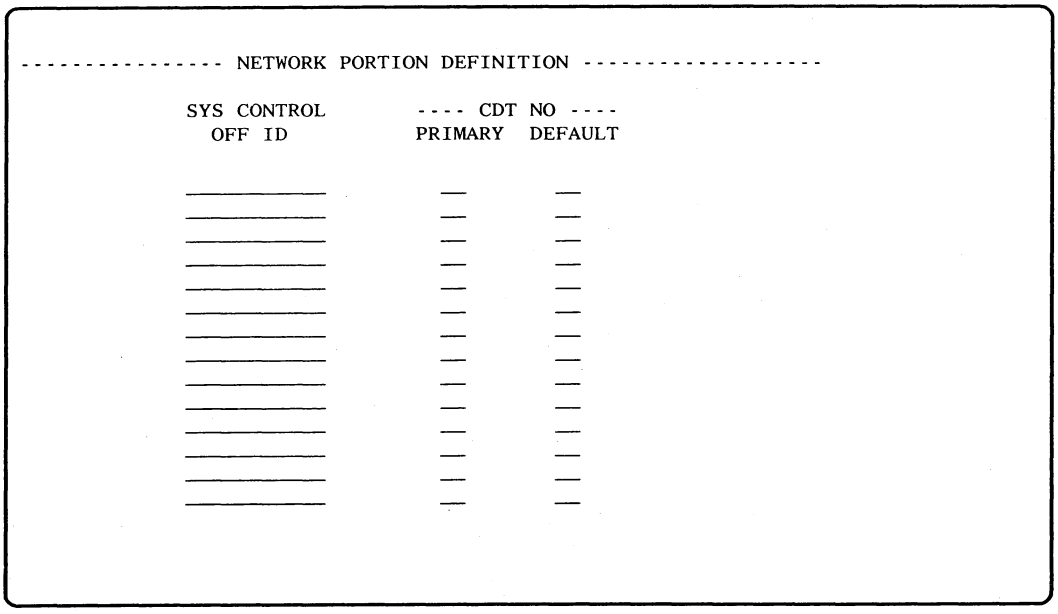

Fig. 82—Network Portion Definition (Mask 29)

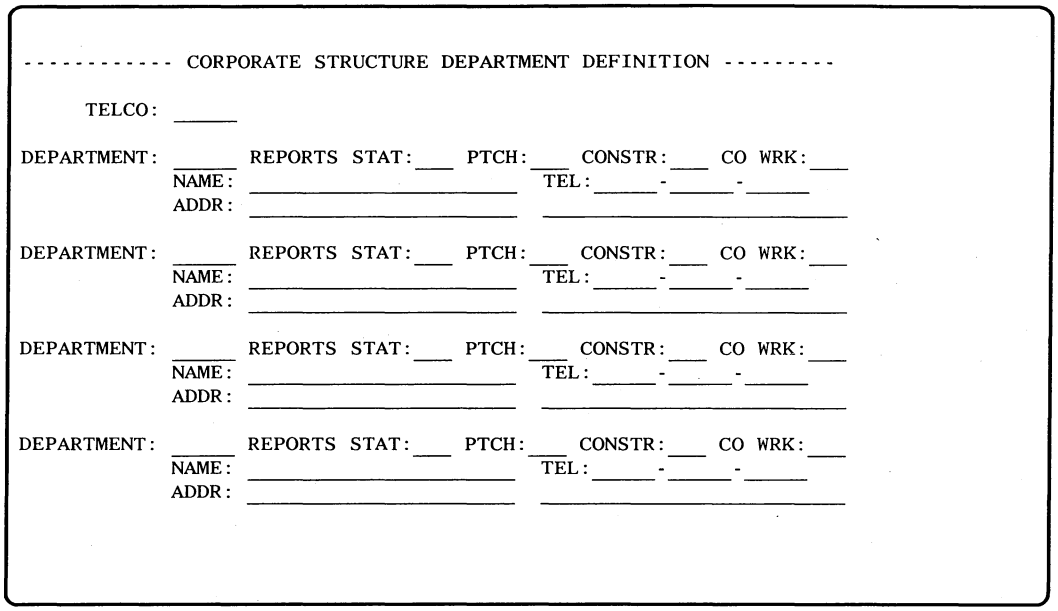

Fig. 83—Corporate Structure Company Department Definition (Mask 31)

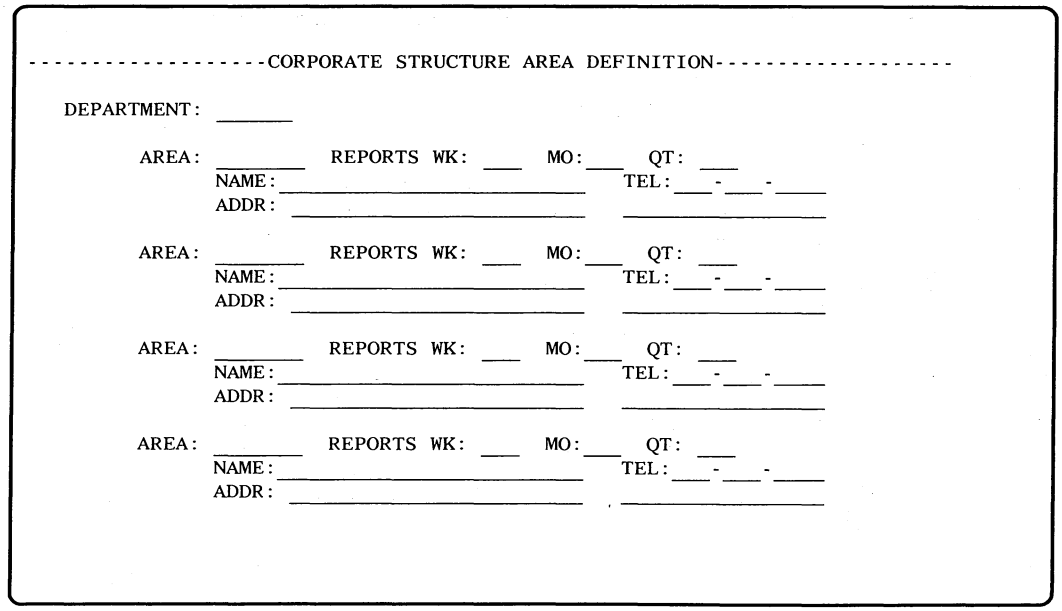

Fig. 84—Corporate Structure Area Definition (Mask 32)

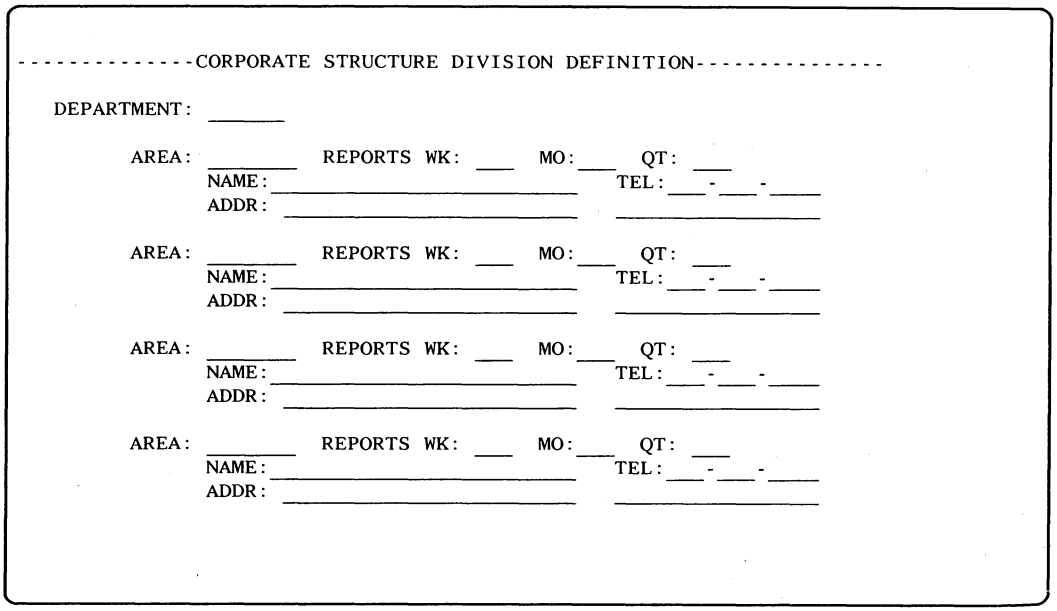

Fig. 85—Corporate Structure Division Definition (Mask 33)

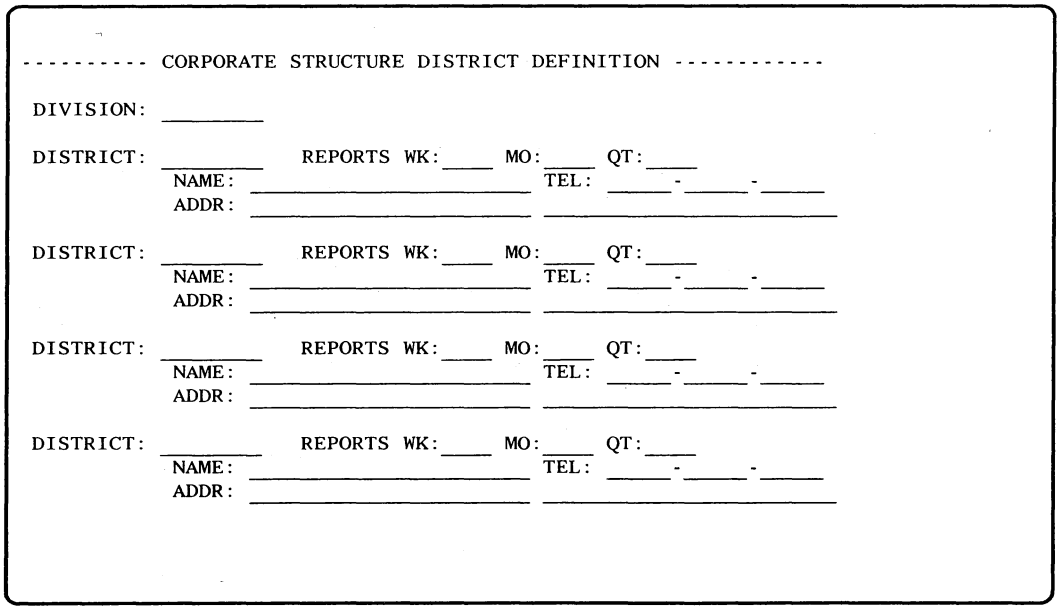

Fig. 86—Corporate Structure District Definition (Mask 34)

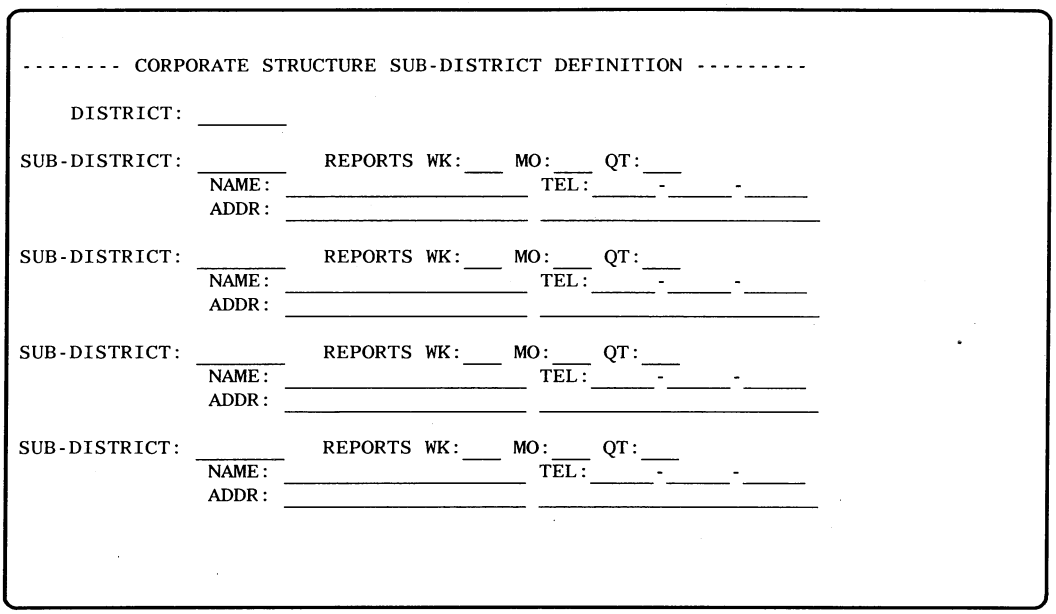

Fig. 87—Corporate Structure Subdistrict Definition (Mask 35)

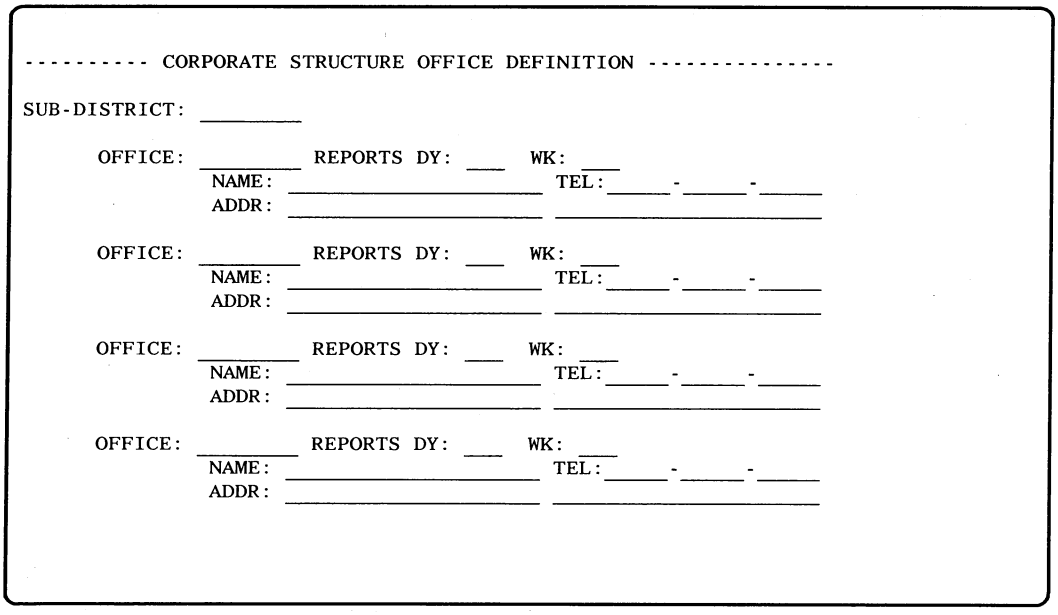

Fig. 88—Corporate Structure Office Definition (Mask 36)

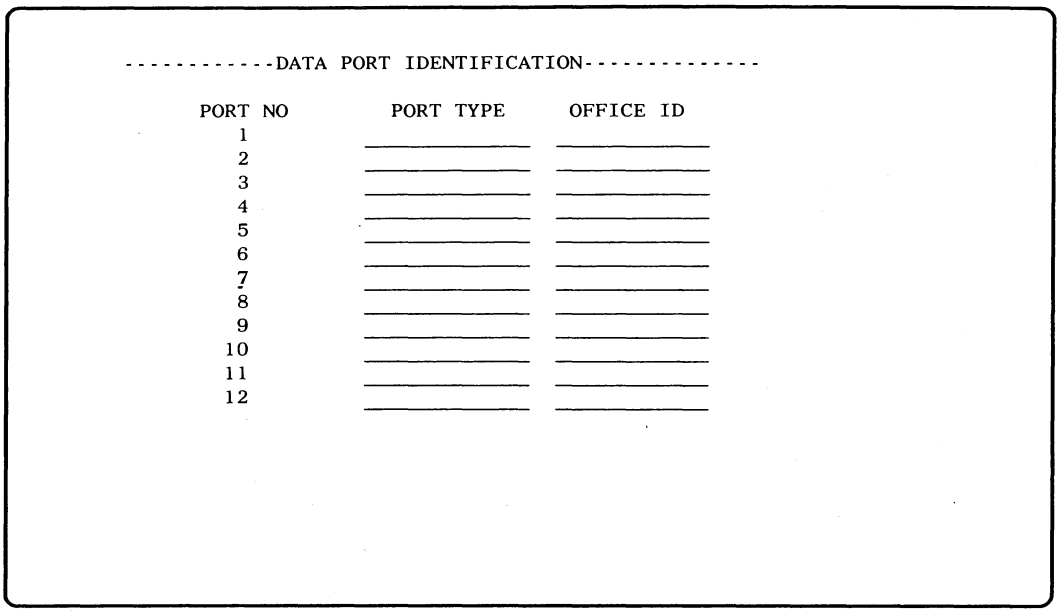

Fig. 89—TCAS Data Port Definition (Mask 37)

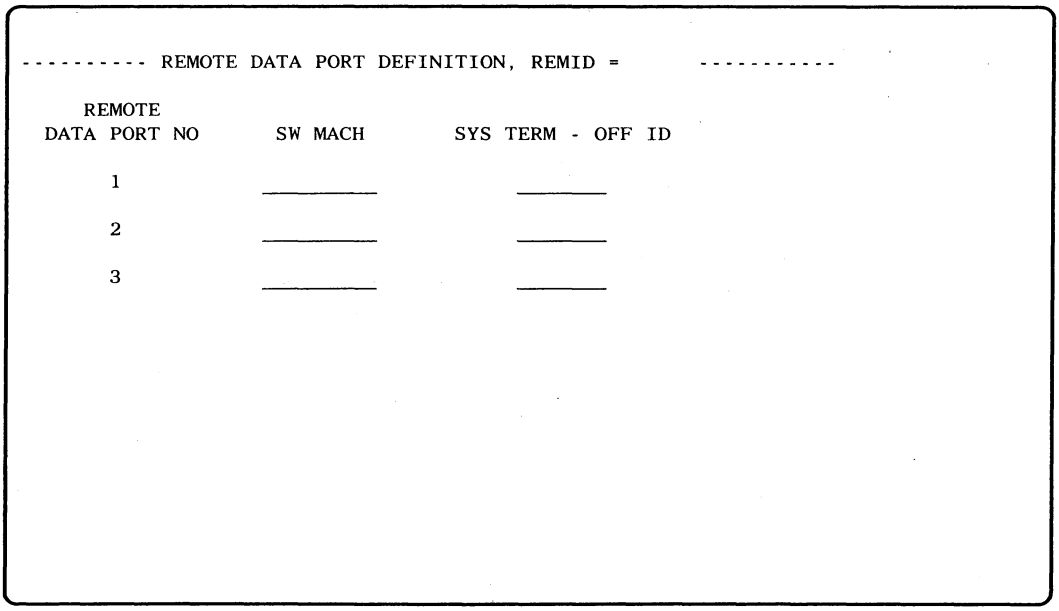

Fig. 90—Remote Data Port Definition (Mask 39)

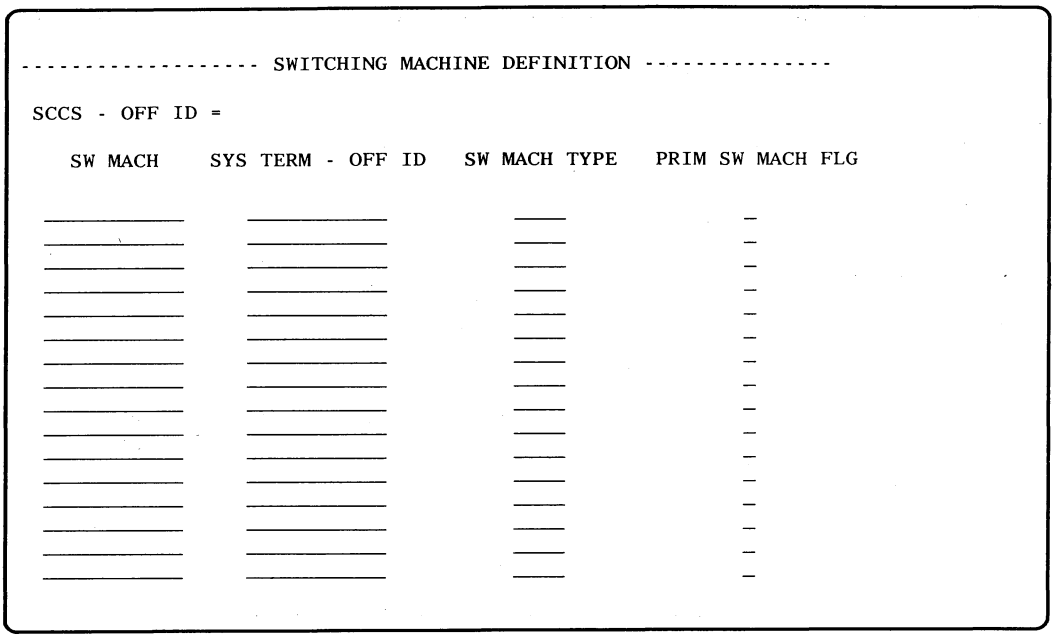

Fig. 91—Switching Machine Definition (Mask 40)

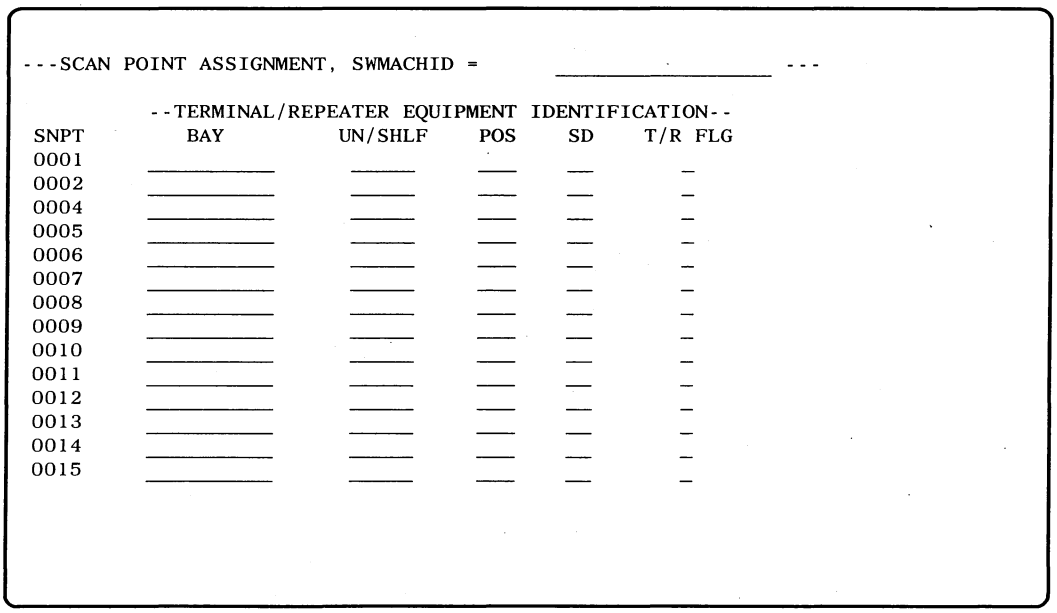

Fig. 92—Scan Point Assignment (Mask 41)

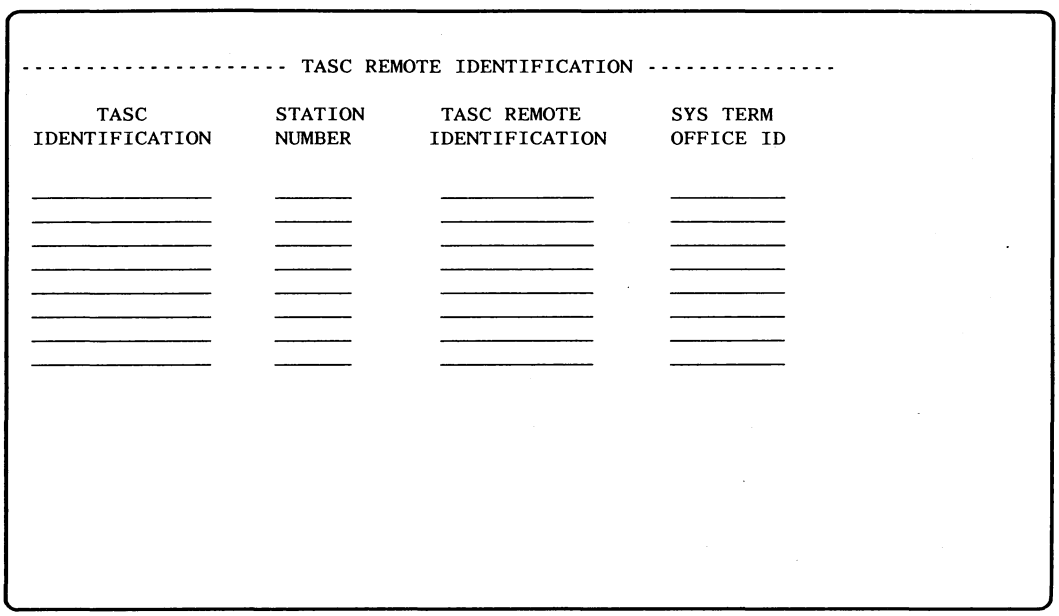

Fig. 93—TASC Remote Identification (Mask 43)

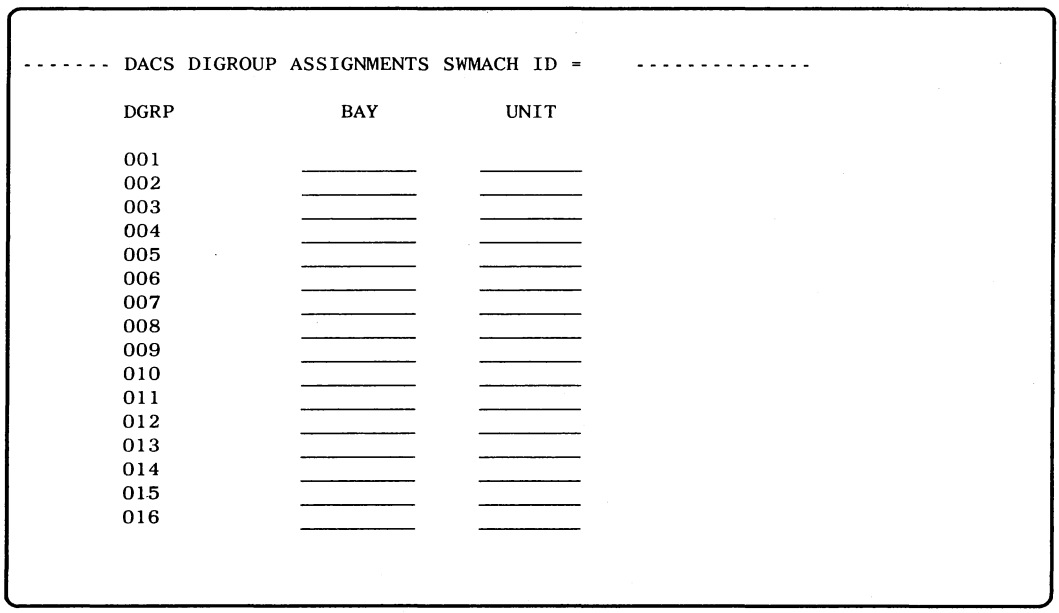

Fig. 94—DACS Digroup Assignment (Mask 44)

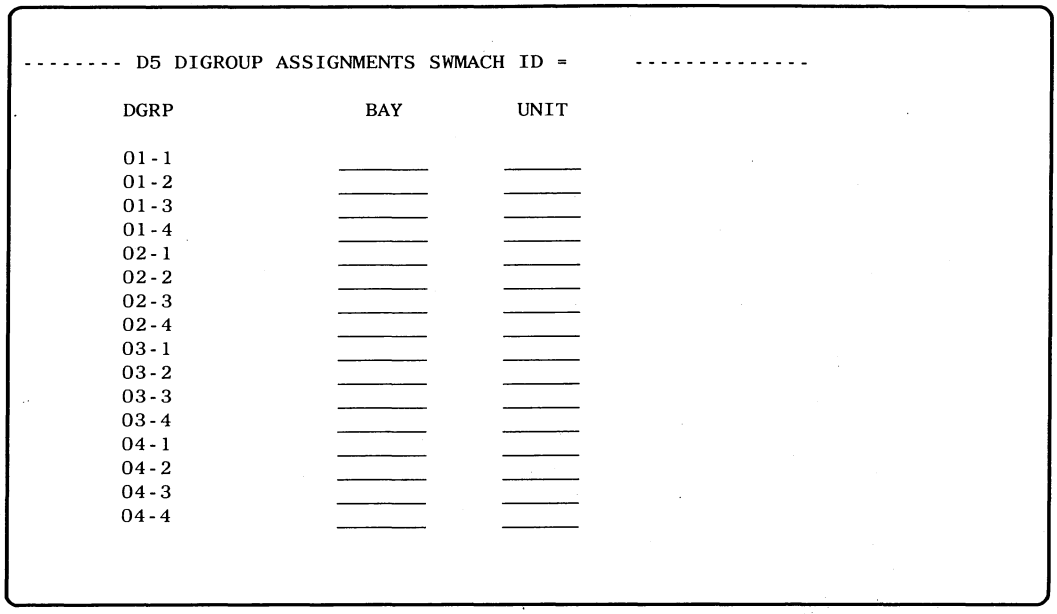

-------- D5 DIGROUP ASSIGNMENTS SWMACH ID = ----------

DGRP	BAY	UNIT
01-1		
01-2		
01-3		
01-4		
02-1		
02-2		
02-3		
02-4		
03-1		
03-2		
03-3		
03-4		
04-1		
04-2		
04-3		
04-4		

Fig. 95—D5 Frame Digroup Assignment (Mask 45)

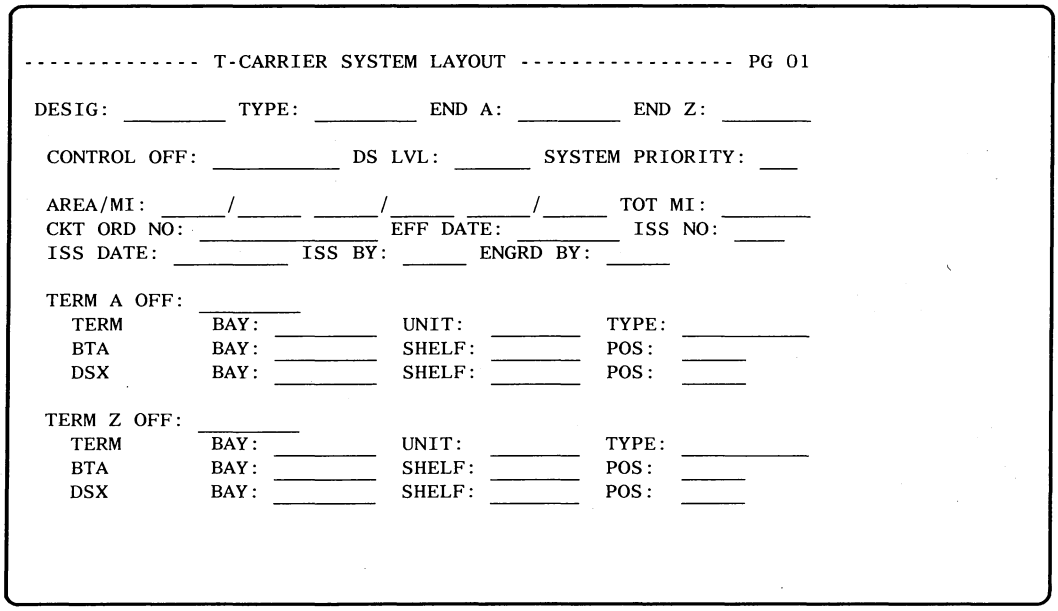

---------- T-CARRIER SYSTEM LAYOUT ---------- PG 01

DESIG: _____ TYPE: _____ END A: _____ END Z: _____

CONTROL OFF: _____ DS LVL: _____ SYSTEM PRIORITY: ___

AREA/MI: _____/_____ _____/_____ _____/_____ TOT MI: _____
CKT ORD NO: _____ EFF DATE: _____ ISS NO: ____
ISS DATE: _____ ISS BY: _____ ENGRD BY: _____

TERM A OFF: _____

TERM	BAY:	_____	UNIT: _____	TYPE:	_____
BTA	BAY:	_____	SHELF: _____	POS:	_____
DSX	BAY:	_____	SHELF: _____	POS:	_____

TERM Z OFF: _____

TERM	BAY:	_____	UNIT: _____	TYPE:	_____
BTA	BAY:	_____	SHELF: _____	POS:	_____
DSX	BAY:	_____	SHELF: _____	POS:	_____

Fig. 96—T-Carrier System Layout (SLR Method) (Mask 50)

```
---------- SPAN LAYOUT, SYSID =                          ---- PG 02

 SPAN TERM OFF: _____________

  END A    DSX       BAY: _______ SHELF: ____ POS: ___
  END A    OFF RPTR  BAY: _______ SHELF: ____ POS: ___ SD: __
  DIRN AZ  CA DESIG: ___ PAIR: ___  CASE: ___ SKT: ___ SD: __
  DIRN ZA  CA DESIG: ___ PAIR: ___  CASE: ___ SKT: ___ SD: __
  END Z    OFF RPTR BAY: _______ SHELF: ____ POS: ___ SD: __
  END Z    DSX       BAY: _______ SHELF: ____ POS: ___

SPAN TERM OFF: _____________

  END A    DSX       BAY: _______ SHELF: ____ POS: ___
  END A    OFF RPTR  BAY: _______ SHELF: ____ POS: ___ SD: __
  DIRN AZ  CA DESIG: ___ PAIR: ___  CASE: ___ SKT: ___ SD: __
  DIRN ZA  CA DESIG: ___ PAIR: ___  CASE: ___ SKT: ___ SD: __
  END Z    OFF RPTR BAY: _______ SHELF: ____ POS: ___ SD: __
  END Z    DSX       BAY: _______ SHELF: ____ POS: ___
```

Fig. 97—Span Layout Page 1 (SLR Method (Mask 51)

```
-------- SPAN LAYOUT, SYSID =                           --- PG 02

 SPAN TERM OFF: __________

  END A    DSX       BAY: __________ SHELF: _______ POS: ___
  HIGH CAPACITY SYS DESIG: ____ TYPE: _________ CHAM: _______
  END Z    DSX       BAY: __________ SHELF: _______ POS: ___

SPAN TERM OFF: _____________

  END A    DSX       BAY: __________ SHELF: ______ POS: ___
  END A    OFF RPTR  BAY: __________ SHELF: ______ POS: ___ SD: __
  DIRN AZ  CA DESIG: ___ PAIR: ___  CASE: ______ SKT: ___ SD: __
  DIRN ZA  CA DESIG: ___ PAIR: ___  CASE: ______ SKT: ___ SD: __
  END Z    OFF RPTR BAY: _________ SHELF: ______ POS: ___ SD: __
  END Z    DSX       BAY: _________ SHELF: ______ POS: ___

SPAN TERM OFF: _____________
```

Fig. 98—Span Layout Page 2 (SLR Method) (Mask 52)

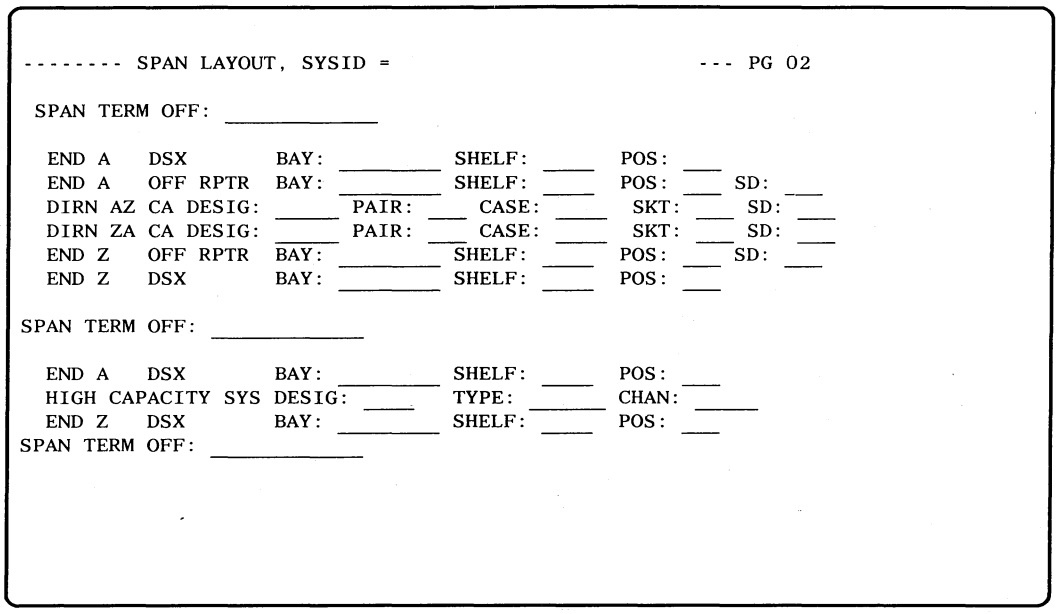

Fig. 99—Span Layout Page 2 (SLR Method) (Mask 53)

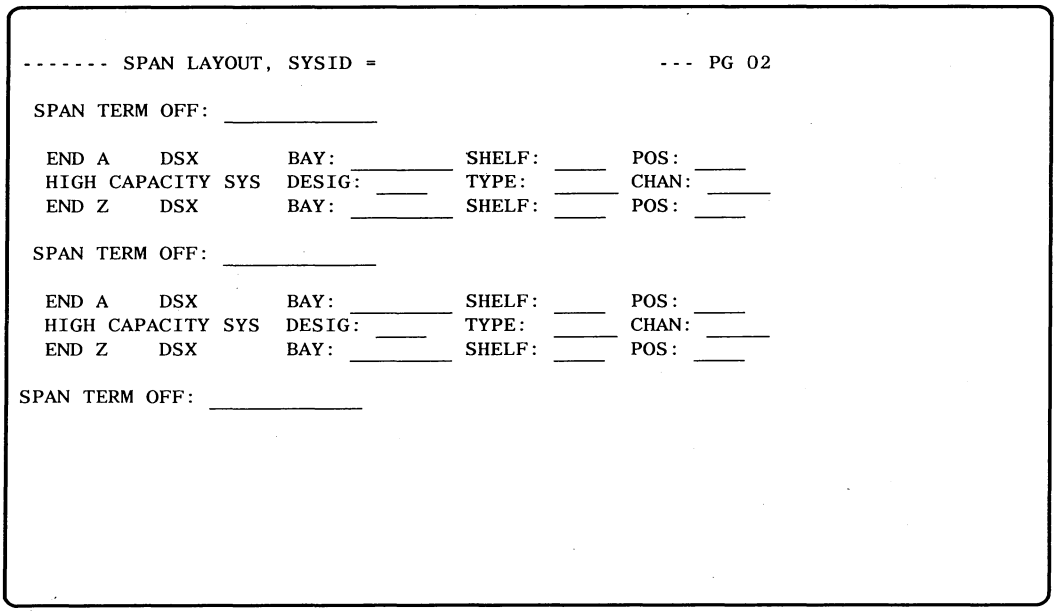

Fig. 100—Span Layout Page 2 (SLR Method) (Mask 54)

```
------------ T-CARRIER PATCH LINE LAYOUT -------------- PG 01

 DESIG: _______  TYPE: _______  END A: _______  END Z: ______

  CONTROL OFF: _________  DS LVL: _____  PATCH LINE CLASS: ___
  AREA/MI: _____/_____  ____/_____  _____/_____  TOT MI: _____
  CKT ORD NO: _____________  EFF DATE: _____  ISS NO: ___
  ISS DATE: _____  ISS BY: ____  ENGRD BY: ____

 SPAN TERM OFF: __________

  END A    DSX       BAY: _____  SHELF: ____  POS: ____
  END A    OFF RPTR  BAY: _____  SHELF: ____  POS: ____  SD: ___
  DIRN AZ  CA DESIG: ____  PAIR: ___  CASE: ___  SKT: ___  SD: ___
  DIRN ZA  CA DESIG: ____  PAIR: ___  CASE: ___  SKT: ___  SD: ___
  END Z    OFF RPTR  BAY: _____  SHELF: ____  POS: ____  SD: ___
  END Z    DSX       BAY: _____  SHELF: ____  POS: ____

SPAN TERM OFF: _____________
```

Fig. 101—T-Carrier Patch Line Layout Page 1 (SLR Method) (Mask 60)

```
------ SPAN LAYOUT, PLID =                          ---- PG 02

 SPAN TERM OFF: _____________

  END A    DSX       BAY: ________  SHELF: ____  POS: ____
  END A    OFF RPTR  BAY: ________  SHELF: ____  POS: ____  SD: ___
  DIRN AZ  CA DESIG: _____  PAIR: ____  CASE: ___  SKT: ____  SD: ___
  DIRN ZA  CA DESIG: _____  PAIR: ____  CASE: ___  SKT: ____  SD: ___
  END Z    OFF RPTR  BAY: ________  SHELF: ____  POS: ____  SD: ___
  END Z    DSX       BAY: ________  SHELF: ____  POS: ____

SPAN TERM OFF: _____________

  END A    DSX       BAY: ________  SHELF: ____  POS: ____
  END A    OFF RPTR  BAY: ________  SHELF: ____  POS: ____  SD: ___
  DIRN AZ  CA DESIG: _____  PAIR: ____  CASE: ___  SKT: ____  SD: ___
  DIRN ZA  CA DESIG: _____  PAIR: ____  CASE: ___  SKT: ____  SD: ___
  END Z    OFF RPTR  BAY: ________  SHELF: ____  POS: ____  SD: ___
  END Z    DSX       BAY: ________  SHELF: ____  POS: ____

SPAN TERM OFF: _____________
```

Fig. 102—T-Carrier Patch Line Layout Page 2 (SLR Method) (Mask 61)

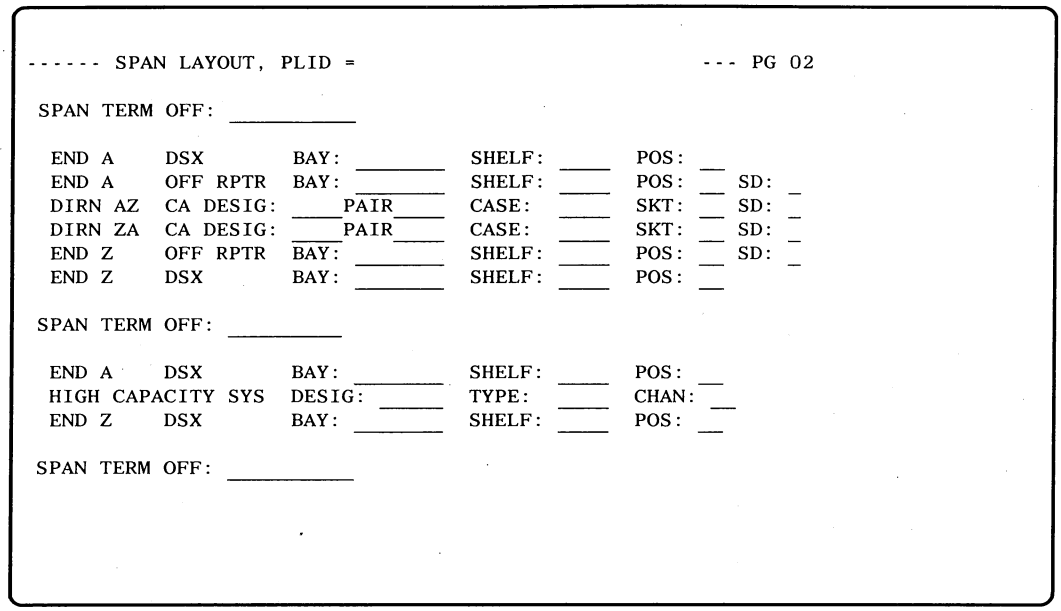

Fig. 103—T-Carrier Patch Line Span Layout Page 2 (SLR Method) (Mask 62)

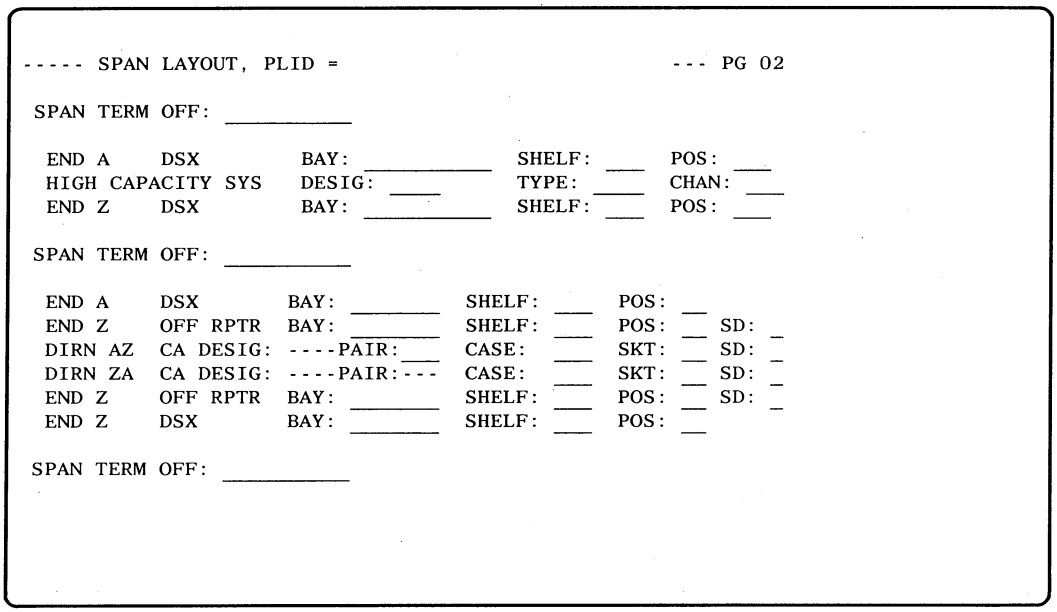

Fig. 104—T-Carrier Patch Line Span Layout Page 2 (SLR Method) (Mask 63)

```
------ SPAN LAYOUT, PLID =                                  --- PG 02

 SPAN TERM OFF: ____________

  END A     DSX       BAY: _______  SHELF: _____  POS:  ____
  HIGH CAPACITY SYS DESIG: _____  TYPE:  _____  CHAN: ____
  END Z     DSX       BAY: _______  SHELF: _____  POS:  ____

 SPAN TERM OFF: __________

  END A     DSX       BAY: _______  SHELF: _____  POS:  ____
  HIGH CAPACITY SYS DESIG: _____  TYPE:  _____  CHAN: ____
  END Z     DSX       BAY: _______  SHELF: _____  POS:  ____

SPAN TERM OFF: ____________
```

Fig. 105—T-Carrier Patch Line Span Layout Page 2 (SLR Method) (Mask 64)

```
-------------- REPEATER DSX ASSIGNMENTS ----------------

 OFF ID: __________

   DSX BAY      SHLF     RPTR TYPE       RPTR BAY    SHLF   POS   SD

 __________   _______    _______    LS   _______   _____   ___   __
                                   US   _______   _____   ___   __
                                   25   _______   _____   ___   __

 __________   _______    _______    LS   _______   _____   ___   __
                                   US   _______   _____   ___   __
                                   25   _______   _____   ___   __

 __________   _______    _______    LS   _______   _____   ___   __
                                   US   _______   _____   ___   __
                                   25   _______   _____   ___   __

 __________   _______    _______    LS   _______   _____   ___   __
                                   US   _______   _____   ___   __
                                   25   _______   _____   ___   __
```

Fig. 106—Repeater DSX Assignment (Mask 82)

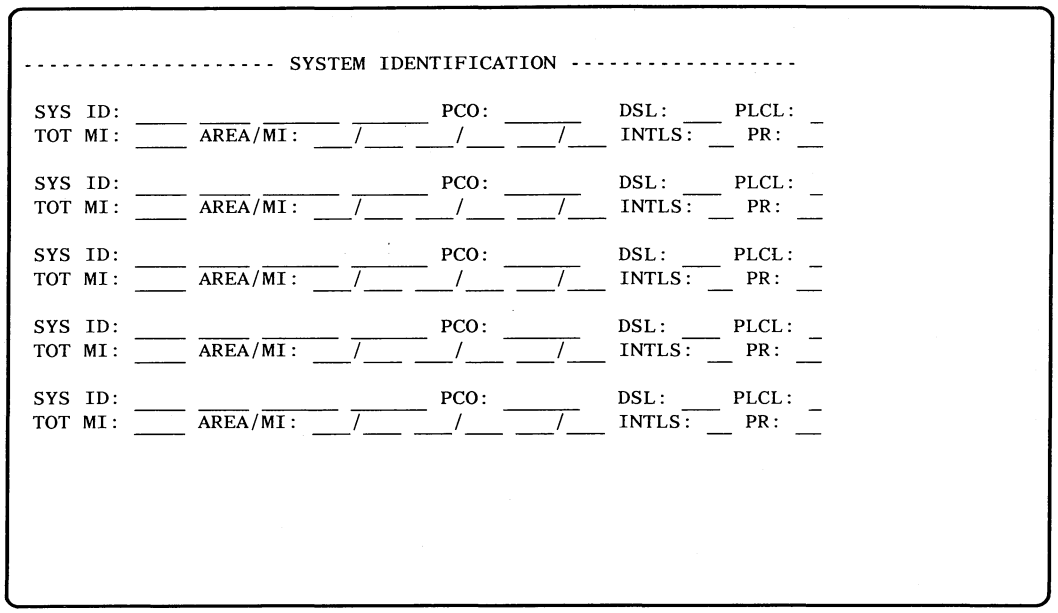

Fig. 107—System Identification (EFA Method) (Mask 90)

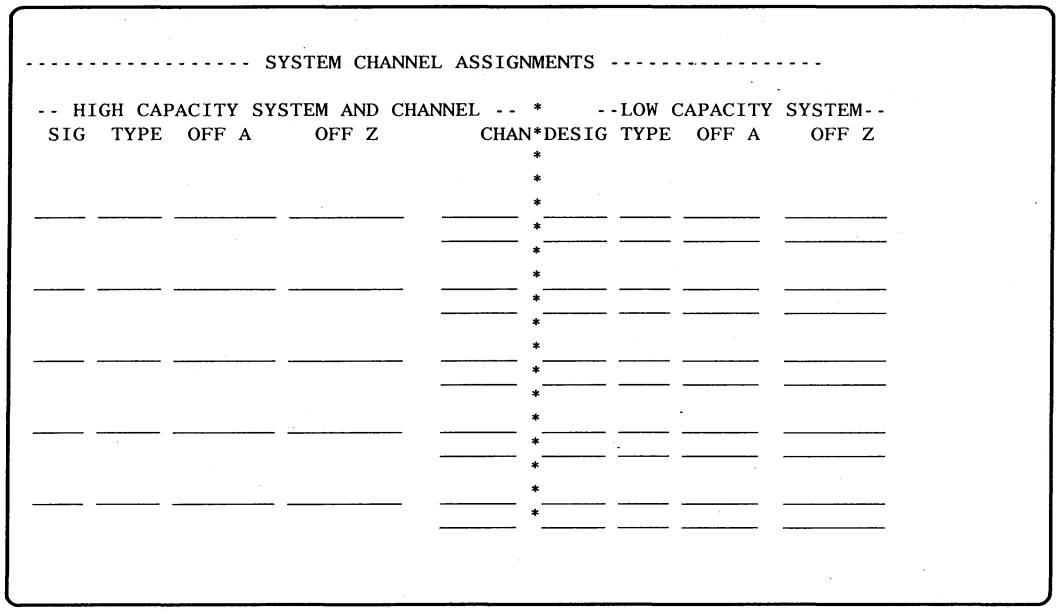

Fig. 108—System Channel Assignment (EFA Method) (Mask 92)

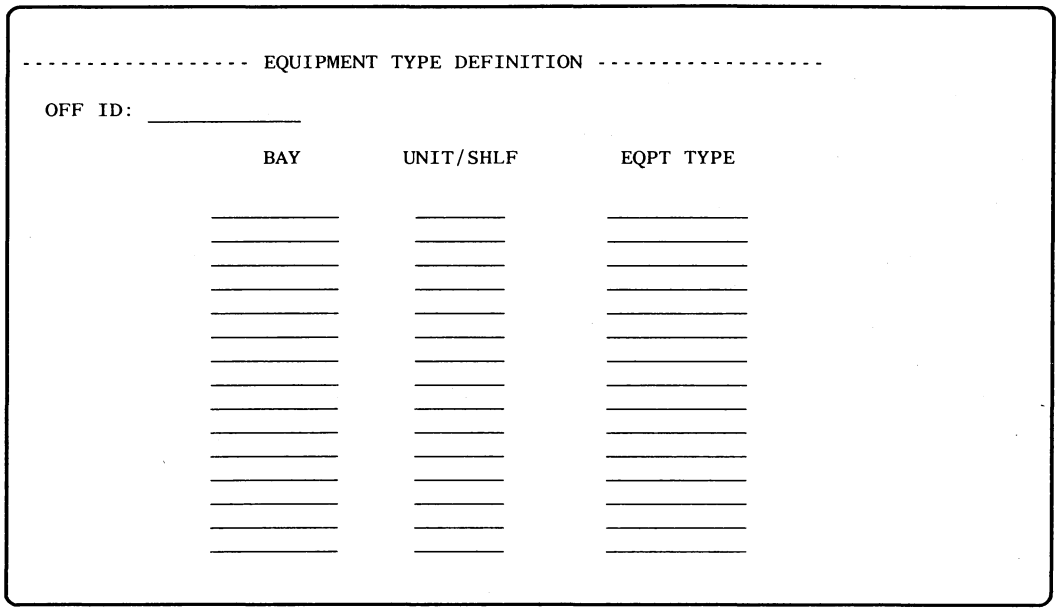

Fig. 109—Equipment Type Definition (EFA Method) (Mask 93)

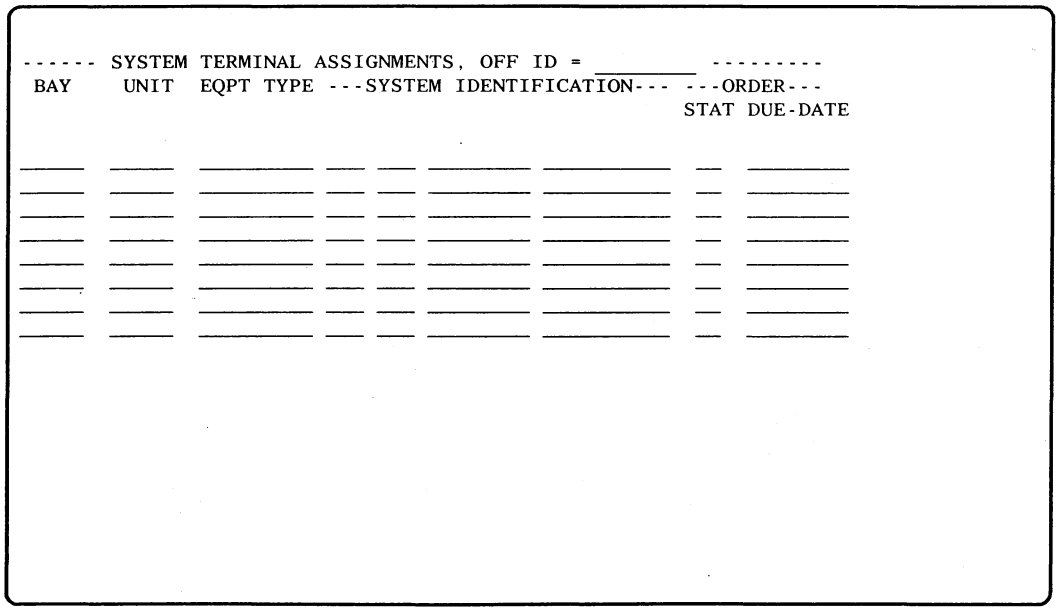

Fig. 110—System Terminals Assignment (EFA Method) (Mask 94)

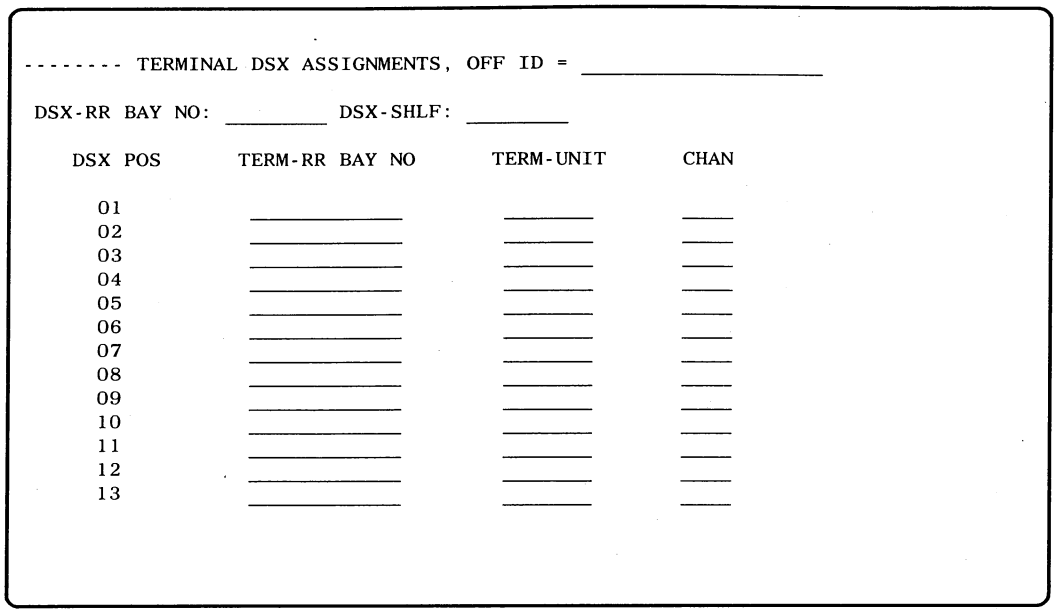

-------- TERMINAL DSX ASSIGNMENTS, OFF ID = _____

DSX-RR BAY NO: _____ DSX-SHLF: _____

DSX POS	TERM-RR BAY NO	TERM-UNIT	CHAN
01			
02			
03			
04			
05			
06			
07			
08			
09			
10			
11			
12			
13			

Fig. 111—Terminal DSX Assignment (EFA Method) (Mask 95)

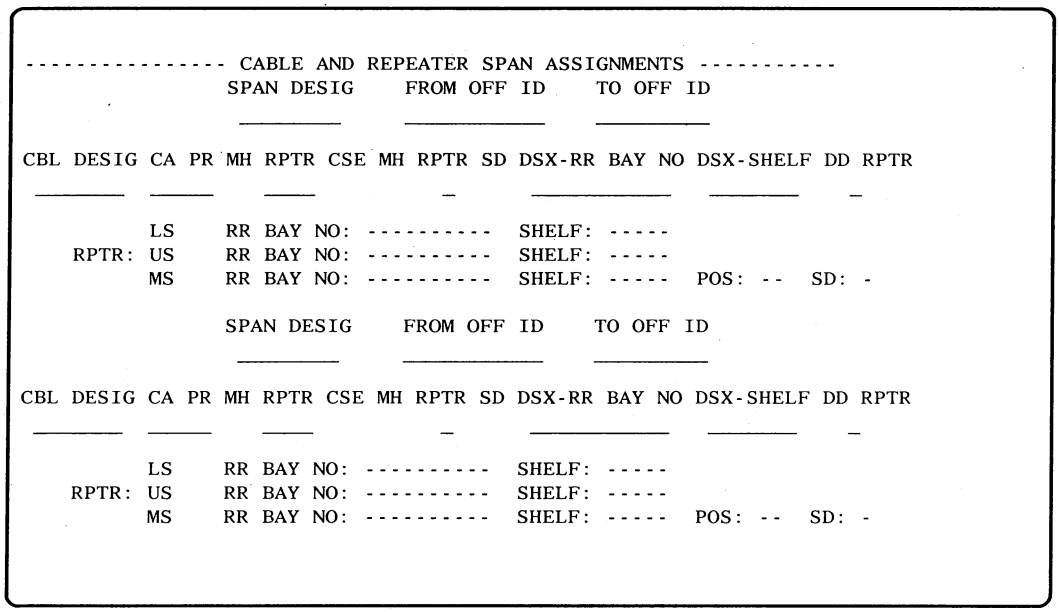

---------- CABLE AND REPEATER SPAN ASSIGNMENTS ----------

SPAN DESIG _____ FROM OFF ID _____ TO OFF ID _____

CBL DESIG	CA	PR	MH	RPTR	CSE	MH	RPTR	SD	DSX-RR BAY NO	DSX-SHELF	DD	RPTR
_____	_____		____		_				_____	_____		_

LS RR BAY NO: ---------- SHELF: -----
RPTR: US RR BAY NO: ---------- SHELF: -----
MS RR BAY NO: ---------- SHELF: ----- POS: -- SD: -

SPAN DESIG _____ FROM OFF ID _____ TO OFF ID _____

CBL DESIG	CA	PR	MH	RPTR	CSE	MH	RPTR	SD	DSX-RR BAY NO	DSX-SHELF	DD	RPTR
_____	_____		____		_				_____	_____		_

LS RR BAY NO: ---------- SHELF: -----
RPTR: US RR BAY NO: ---------- SHELF: -----
MS RR BAY NO: ---------- SHELF: ----- POS: -- SD: -

Fig. 112—Cable and Repeater Span Assignment (EFA Method) (Mask 96/97)

```
--- SYSTEM SPAN ASSIGNMENTS, SPN ID = ___ _____ _____ ---------
   ---- RPTR AT OFF A -----            --- RPTR AT OFF Z ----
   RPTR  RR BAY NO  SHELF              RPTR  RR BAY NO  SHELF
    LS   ---------  -----               LS   --------  -----
    US   ---------  -----               US   --------  -----
    DSX  ---------  -----               DSX  --------  -----
SLT     --- SYSTEM IDENTIFICATION ----       ORD STAT ORD DUE-DATE
01      --- ----- -------- -----------          --      ----------
02      --- ----- -------- -----------          --      ----------
03      --- ----- -------- -----------          --      ----------
04      --- ----- -------- -----------          --      ----------
05      --- ----- -------- -----------          --      ----------
06      --- ----- -------- -----------          --      ----------
07      --- ----- -------- -----------          --      ----------
08      --- ----- -------- -----------          --      ----------
09      --- ----- -------- -----------          --      ----------
10      --- ----- -------- -----------          --      ----------
11      --- ----- -------- -----------          --      ----------
12      --- ----- -------- -----------          --      ----------
13      --- ----- -------- -----------          --      ----------
```

Fig. 113—System Span Assignment (EFA Method) (Mask 98)

```
--------------------- REPEATER TO SPAN ASSIGNMENTS ------------

                SPN DESIG     FROM OFF ID     TO OFF ID

                _______       ____________    ____________

    SLT         RR BAY NO         SHELF       POS     SD
    01          _________         _____       ___     __
    02          _________         _____       ___     __
    03          _________         _____       ___     __
    04          _________         _____       ___     __
    05          _________         _____       ___     __
    06          _________         _____       ___     __
    07          _________         _____       ___     __
    08          _________         _____       ___     __
    09          _________         _____       ___     __
    10          _________         _____       ___     __
    11          _________         _____       ___     __
    12          _________         _____       ___     __
    13          _________         _____       ___     __
```

Fig. 114—Repeater to Span Assignment (EFA Method) (Mask 99)

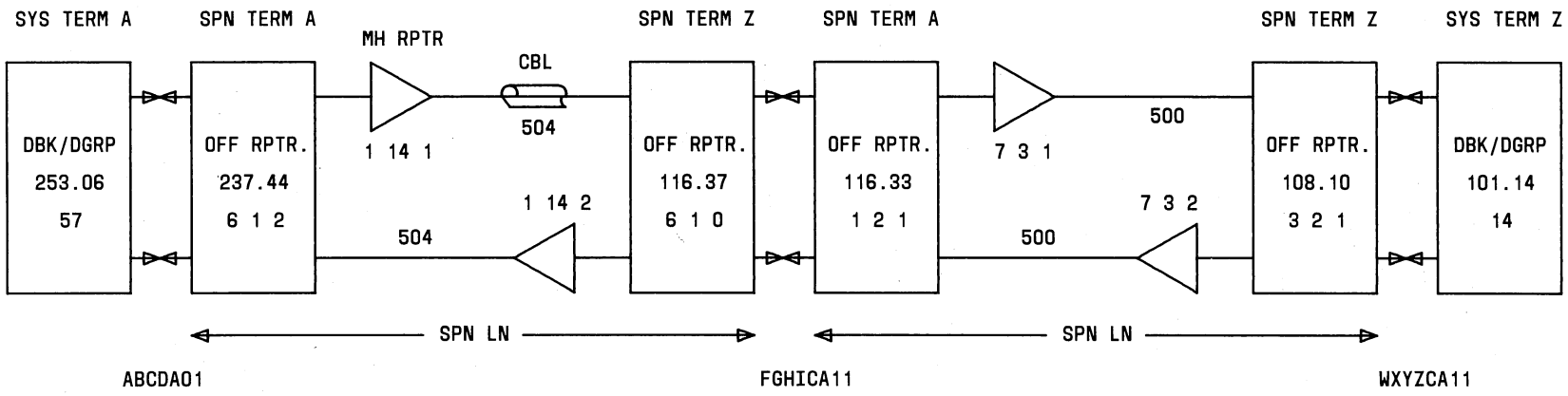

Fig. 115—T-Carrier Two-Span System Block Diagram

E-4940 (11-66)

T CARRIER—SYSTEM LAYOUT RECORD

BSP 365-000-010

A	CHANNEL GROUP: 101 T1 ABCD CA 01 WXYZ CA11								CONTROL OFFICE: ABCD CA01 TO										
B	AREA MI.: OPRBY7.0	AREA MI.	AREA MI.	TOTAL MI.: 7.0	CKT. ORDER NO.: ZTF993	DATE IN EFFECT: 7-1-76	ISSUE NO.: 1	CARD NO.: OF											
C	OFFICE A: CNCRCA01	TERM BAY: 253.0657	BTA: 237.446	POSITION: 2	OFFICE B: WXYZ CA11	TERM BAY: 101.14 14	BTA: 108.103	POSITION: 3											
D	TRANS. FROM A		CASE SKT	SPAN TERMINATION				OFFICE OR STATION			TRANS. FROM B		CASE SKT	SPAN TERMINATION					
				INPUT		OUTPUT								INPUT		OUTPUT			
	CABLE	PAIR		RR BAY NO POS		RR BAY NO POS					CABLE	PAIR		RR BAY NO POS		RR BAY NO POS			
	1	2	3	4		5		SPAN	6	SPAN	7	8	9	10		11			
E						237.44	6-1-2	ABCD CA01						237.44	6-1-2				
F	504	764	14-1					1		1	504	464	14-2						
G				116.37	6-1	116.33	1-2-1	FGHI CA11						116.33	1-2-1	116.37	6-1		
H	500	778	3-1					7		7	500	478	3-2						
I				108.10	3-2-1			WXYZ CA11								108.10	3-2-1		
J																			
K																			
L																			
M																			
N																			
O																			
P																			
Q																			
R																			
S																			
T																			

ISS. DATE 5-15-76 ISS. BY GRR ENGRD. BY GRR REF. NO.

Fig. 116—SLR Card

A54101 T1 ABCDSTBD1 ABCDSTBD5 AABCDSTBD1 101.15 3
SYS ADMIN DATA

50: SYS ID
51: SYS AR MI (OPT)
52: SYS CKT ORD NO (OPT)
53: SYS ISS DA (OPT)

SYS TERM A DATA

54: D BK/DGRP
55: BK TERM ASSY (OPT)
56: D BK/DGRP DSX1 (OPT)

SYS TERM Z DATA

54: D BK /DGRP
55: BKTERM ASSY (OPT)
56: D BK/DGRP DSX 1 (OPT)

SPN TERM A & SPN LN AZ DATA

57: SYS OFF RPTR DSX 1 (OPT)
58: SYS OFF RPTR
59: SYS CBL & MH RPTR

SPN LN ZA & SPN TERM Z DATA

59: SYS CBL & MH RPTR
58: SYS OFF RPTR
57: SYS OFF RPTR DSX 1 (OPT)

SPN TERM A & SPN LN AZ DATA

.
.
.

Fig. 117—SLR Group

T1 CARRIER
D-BANK ASSIGNMENTS

OFFICE: ABCDCA01

BAY	UNIT	SYSTEM
253.06	57	101 T1- ABCDCA01 WXYTCA11
	56	102 T1- ABCDCA01 WXYTCA11
	55	101 T1- ABCDCA01 FGHICA11
253.05	54	102 T1- ABCDCA01 FGHICA11
	53	101 T1- ABCDCA01 MNOPCAMA
	52	
253.04	51	
	50	
	49	

Fig. 118—Typical EFA D-Channel Bank Assignment Record

T1 CARRIER
SPAN ASSIGNMENTS

OFFICE A: ABCDCA01	OFFICE B: FGHICA11
US RPTR SH: 237.44 6	US RPTR SH: 116.37 6
LS RPTR SH: 237.44 5	LS RPTR SH: 116.37 5
DSX: 292.01 4	DSX: 140.01 5

AB CABLE: 504 CASE: 1 SIDE: 1 PAIRS: 751-775
BA CABLE: 504 CASE: 1 SIDE: 2 PAIRS: 451-475

SLOT	SYSTEM
1	101 T1- ABCDCA01 FGHICA11
2	102 T1- ABCDCA01 FGHICA11
3	114 T1- MNOPCA01 WXYZCA11
4	
5	
6	
7	
8	
9	
10	
11	
12	
13	
14	101 T1- ABCDCA01 WXYZCA11
15	
16	
17	
18	
19	
20	
21	
22	
23	
24	
25	912 T1ML MNOPCAMA RACDCAMA

Fig. 119—Typical EFA Span Assignment Record

TABLE A																		
IDENT NO.	LINE NO.	FORM TYPE	ED1P118-10		E2A BASIC REMOTE RR NO.		CONN JUNCT PNL				LMCD		REM IND UN				TABLE XREF
							L1 OR L3		L2 OR L4				CGA		RED		
			FIG	EQPT FIG			RR NO.	UNIT	RR NO.	UNIT	RR NO.	UNIT	RR NO.	UNIT	RR NO.	UNIT	
	1 2 3	DBQ	72	B3	143.22		142.26	150	142.26	100	143.24	100					B
	4 5 6	DAA	1	B2	143.22		142.24	151	142.26	101	143.24	101					C
	7 8 9																
	10 11 12																
	13 14 15																
	16 17 18																
	19 20 21																
	22 23 24																
	25																
IDW	LNR	FMTY	EFG	EQFIG	E2BAS	E2REM	CJP1R	C1UN	CJP2R	C2UN	LMRR	LMUN	CGARR	CGUN	REDRR	RDRR	TXREF

Fig. 120—CGA Display Assignment Data — Table A (P/O TF608-034)

TABLE B

		2CJP= 100 1EQUIPMENT TYPE= D3 CGA														2CJP= 150 1EQUIPMENT TYPE= D3 BK													
					STATUS						SWITCH								STATUS						SWITCH					
IDENT NO.	LINE NO.	LMCD	RELAY RACK NUMBER	UNIT NO.	FUNC NAME	S1	S1R	TLM DS	TLM W	TLM B1	FUNC NAME	RS	RSR	TLM GR	TLM SG	TLM SP	LMCD	RELAY RACK NUMBER	UNIT NO.	FUNC NAME	S1	S1R	TLM DS	TLM W	TLM B1	FUNC NAME	RS	RSR	TLM GR	TLM SG	TLM SP
	1	A			CGA	A1	A33	8	1	01								141.24	1	RED	A1	A33	8	2	01	ACO	C1	C33	1	5	11
	2	A			CGA	A2	A34	8	1	02								141.24	2	RED	A2	A34	8	2	02	ACO					
	3	A			CGA	A3	A35	8	1	03								141.24	3	RED	A3	A35	8	2	03	ACO					
	4	A			CGA	A4	A36	8	1	04								141.24	4	RED	A4	A36	8	2	04	ACO					
	5	A			CGA	A5	A37	8	1	05								141.24	5	RED	A5	A37	8	2	05	ACO					
	6	A			CGA	A6	A38	8	1	06								141.24	6	RED	A6	A38	8	2	06	ACO					
	7	A			CGA	A7	A39	8	1	07								142.23	1	RED	A7	A39	8	2	07	ACO	C2	C34	1	5	2
	8	A			CGA	A8	A40	8	1	08								142.23	2	RED	A8	A40	8	2	08	ACO					
	9	A			CGA	A9	A41	8	1	09								142.23	3	RED	A9	A41	8	2	09	ACO					
	10	A			CGA	A10	A42	8	1	10								142.23	4	RED	A10	A42	8	2	10	ACO					
	11	A			CGA	A11	A43	8	1	11								142.23	5	RED	A11	A43	8	2	11	ACO					
	12	A			CGA	A12	A44	8	1	12								142.23	6	RED	A12	A44	8	2	12	ACO					
	13	A			CGA	A13	A45	8	1	13								142.27	1	RED	A13	A45	8	2	13	ACO	C3	C35	1	5	3
	14	A			CGA	A14	A46	8	1	14								142.27	2	RED	A14	A46	8	2	14	ACO					
	15	A			CGA	A15	A47	8	1	15								142.27	3	RED	A15	A47	8	2	15	ACO					
	16	A			CGA	A16	A48	8	1	16								142.27	4	RED	A16	A48	8	2	16	ACO					
	17	B			CGA	A17	A49	8	3	01								142.27	5	RED	A17	A49	8	4	01	ACO					
	18	B			CGA	A18	A50	8	3	02								142.27	6	RED	A18	A50	8	4	02	ACO					
	19	B			CGA	A19	A51	8	3	03								142.18	1	RED	A19	A51	8	4	03	ACO	C4	C36	1	5	4
	20	B			CGA	A20	A52	8	3	04								142.18	2	RED	A20	A52	8	4	04	ACO					
	21	B			CGA	A21	A53	8	3	05								142.18	3	RED	A21	A53	8	4	05	ACO					
	22	B			CGA	A22	A54	8	3	06								142.18	4	RED	A22	A54	8	4	06	ACO					
	23	B			CGA	A23	A55	8	3	07								142.18	5	RED	A23	A55	8	4	07	ACO					
	24	B			CGA	A24	A56	8	3	08								142.18	6	RED	A24	A56	8	4	08	ACO					
	25	B			CGA	A25	A57	8	3	09								142.20	1	RED	A25	A57	8	4	09	ACO	C5	C37	1	5	5
	26	B			CGA	A26	A58	8	3	10								142.20	2	RED	A26	A58	8	4	10	ACO					
	27	B			CGA	A27	A59	8	3	11								142.20	3	RED	A27	A59	8	4	11	ACO					
	28	B			CGA	A28	A60	8	3	12								142.20	4	RED	A28	A60	8	4	12	ACO					
	29	B			CGA	A29	A61	8	3	13								142.20	5	RED	A29	A61	8	4	13	ACO					
	30	B			CGA	A30	A62	8	3	14								142.20	6	RED	A30	A62	8	4	14	ACO					
	31	B			CGA	A31	A63	8	3	15								142.22	1	RED	A31	A63	8	4	15	ACO	C6	C38	1	5	6
	32	B			CGA	A32	A64	8	3	16								142.22	2	RED	A32	A64	8	4	16	ACO					
	33	C			CGA	C1	C33	9	1	01								142.22	3	RED	B1	B33	9	2	01	ACO					
	34	C			CGA	C2	C34	9	1	02								142.22	4	RED	B2	B34	9	2	02	ACO					
	35	C			CGA	C3	C35	9	1	03								142.22	5	RED	B3	B35	9	2	03	ACO					
	36	C			CGA	C4	C36	9	1	04								142.22	6	RED	B4	B36	9	2	04	ACO					

Fig. 121—CGA Status and ACI Switch Assignment Data — Table B (P/O TF608-034)

TABLE C

		2CJP= 101 D1 CGA														2CJP= 151													
		1EQUIPMENT TYPE=														1EQUIPMENT TYPE= D1 BK													
IDENT NO.	LINE NO.	LMCD	RELAY RACK NUMBER	UNIT NO.	STATUS						SWITCH						LMCD	RELAY RACK NUMBER	UNIT NO.	STATUS						SWITCH					
					FUNC NAME	S1	S1R	TLM			FUNC NAME	RS	RSR	TLM						FUNC NAME	S1	S1R	TLM			FUNC NAME	RS	RSR	TLM		
								DS	W	B1				GR	SG	SP							DS	W	B1				GR	SG	SP
	1	A	142.05	1	CGA	A1	A33	10	1	01								142.01	1	RED	A1		10	2	01	ACO	B1	B33	1	5	11
	2	A	142.05	2	CGA	A2	A34	10	1	02								142.01	2	RED	A2		10	2	02	ACO					
	3	A	142.05	3	CGA	A3	A35	10	1	03								142.01	3	RED	A3		10	2	03	ACO					
	4	A	142.05	4	CGA	A4	A36	10	1	04								142.03	4	RED	A4		10	2	04		B2	B34	1	5	12
	5	A	142.05	5	CGA	A5	A37	10	1	05								142.03	5	RED	A33		10	2	05						
	6	A	142.05	6	CGA	A6	A38	10	1	06								142.03	6	RED	A34		10	2	06						
	7	A	142.05	7	CGA	A7	A39	10	1	07								142.07	7	RED	A35		10	2	07		B3	B35	1	5	13
	8	A	142.05	8	CGA	A8	A40	10	1	08								142.07	8	RED	A36		10	2	08						
	9	A	142.05	9	CGA	A9	A41	10	1	09								142.07	9	RED	A5		10	2	09						
	10	A	142.05	10	CGA	A10	A42	10	1	10								142.09	10	RED	A6		10	2	10		B4	B36	1	5	14
	11	A	142.05	11	CGA	A11	A43	10	1	11								142.09	11	RED	A7		10	2	11						
	12	A	142.05	12	CGA	A12	A44	10	1	12								142.09	12	RED	A8		10	2	12						
	13	A	142.15	13	CGA	A13	A45	10	1	13								142.11	13	RED	A37		10	2	13		B5	B37	1	5	15
	14	A	142.15	14	CGA	A14	A46	10	1	14								142.11	14	RED	A38		10	2	14						
	15	A	142.15	15	CGA	A15	A47	10	1	15								142.11	15	RED	A39		10	2	15						
	16	A	XXXX	XX	CGA	A16	A48	XX	1	16								XXXX	XX	RED	A40		XX	2	16		XX	XX	X	X	X
	17	B	142.15	16	CGA	A17	A49	10	1	01								142.13	16	RED	A9		10	4	01		B6	B38	1	5	16
	18	B	142.14	17	CGA	A18	A50	10	1	02								142.13	17	RED	A10		10	4	02						
	19	B	142.15	18	CGA	A19	A51	10	1	03								142.13	18	RED	A11		10	4	03						
	20	B	142.15	19	CGA	A20	A52	10	1	04								142.17	19	RED	A12		10	4	04		B7	B39	1	6	1
	21	B	142.15	20	CGA	A21	A53	10	1	05								142.17	20	RED	A41		10	4	05						
	22	B	142.15	21	CGA	A22	A54	10	1	06								142.17	21	RED	A42		10	4	06						
	23	B	142.15	22	CGA	A23	A55	10	1	07								142.19	22	RED	A43		10	4	07		B8	B40	1	6	2
	24	B	142.15	23	CGA	A24	A56	10	1	08								142.19	23	RED	A44		10	4	08						
	25	B	142.15	24	CGA	A25	A57	10	1	09								142.19	24	RED	A13		10	4	09						
	26	B	142.25	25	CGA	A26	A58	10	1	10								142.21	25	RED	A14		10	4	10		B9	B41	1	6	3
	27	B	142.25	26	CGA	A27	A59	10	1	11								142.21	26	RED	A15		10	4	11						
	28	B	142.25	27	CGA	A28	A60	10	1	12								142.21	27	RED	A16		10	4	12						
	29	B			CGA	A29	A61	10	1	13										RED	A45		10	4	13		B10	B42	1	6	4
	30	B			CGA	A30	A62	10	1	14										RED	A46		10	4	14						
	31	B			CGA	A31	A63	10	1	15										RED	A47		10	4	15						
	32	B	XXXX	XX	CGA	A32	A64	XX	1	16								XXXX	XX	RED	A48		XX	4	16		XX	XX	X	X	X
	33	C			CGA	C1	C33	11	1	01										RED	A17		11	2	01		B11	B43	1	6	5
	34	C			CGA	C2	C34	11	1	02										RED	A18		11	2	02						
	35	C			CGA	C3	C35	11	1	03										RED	A19		11	2	03						
	36	C			CGA	C4	C36	11	1	04										RED	A20		11	2	04		B12	B44	1	6	6

Fig. 122—CGA Display Assignment Data — Table C (P/O TF608-034)

FORM D

E TYPE TELEMETRY BASIC REMOTE
RR BAY NO.
OFFICE I.D.

MLSI SHELF			MLSI X-CONN		TELEMETRY			NOTES
RR BAY NO.	UNIT NO.	TERM. STRIP	DETR		DISPLAY			
			GRP	RR BAY NO.	WORD	NO	TYPE	
		A	A		1,2		EAM	
		B	B					
		A	A		3,4			
		B	B					
		A	A		1,2		EAM	
		B	B					
		A	A		3,4			
		B	B					
		A	A		1,2		EAM	
		B	B					
		A	A		3,4			
		B	B					
		A	A		1,2		EAM	
		B	B					
		A	A		3,4			
		B	B					
		A	A		1,2		EAM	
		B	B					
		A	A		3,4			
		B	B					

Fig. 123—MLSI Display Assignment Data

FORM B

MLSI SHELF J98722E
RR BAY NO.
UNIT NO.

OFFICE LOC. I.D.

MLSI SHELF		MLSI X-CONN			MLSI	REPEATER				MONITORED LINE					MLSI		
SLOT	CPI CKT	DETR			BPDS	RR BAY NO.	SHLF	POS	SD	DESIG	TYPE	A OFFICE I.D.	Z OFFICE I.D.	ADJACENT SPAN OFFICE	SD NO.	TLM	
		CKT	GRP	RR BAY NO.	CKT											WO	BIT
1	1	1	A													A	1
	2	2	A													B	1
2	1	3	A													A	2
	2	4	A													B	2
3	1	5	A													A	3
	2	6	A													B	3
4	1	7	A													A	4
	2	8	A													B	4
5	1	9	A													A	5
	2	10	A													B	5
6	1	11	A													A	6
	2	12	A													B	6
7	1	13	A													A	7
	2	14	A													B	7
8	1	15	A													A	8
	2	16	A													B	8
9	1	1	B													A	9
	2	2	B													B	9
10	1	3	B													A	10
	2	4	B													B	10
11	1	5	B													A	11
	2	6	B													B	11
12	1	7	B													A	12
	2	8	B													B	12
13	1	9	B													A	13
	2	10	B													B	13
14	1	11	B													A	14
	2	12	B													B	14
15	1	13	B													A	15
	2	14	B													B	15
16	1	15	B													A	16
	2	16	B													B	16

Fig. 124—MLSI Status Assignment Data

TABLE D ASSIGNMENT TABLE DBY

IDENT NO.	LINE NO.	LMCD	RELAY RACK NUMBER	UNIT NO.	STATUS						SWITCH					
					FUNC NAME	S1	S1R	TLM DS	TLM W	TLM B1	FUNC NAME	RS	RSR	TLM GR	TLM SG	TLM SP
	1				XXX	A1	A33	7	1	1	XXX	1	33	1	3	1
	2		143.01	100	SF1	A2	A34	7	1	2	BS1	2	33	1	3	2
	3		143.03	101	SF2	A3	A35	7	1	3	BS2	3	33	1	3	3
	4		143.05	102	SF3	A4	A36	7	1	4	BS3	4	33	1	3	4
	5		143.07	103	SF4	A5	A37	7	1	5	BS4	5	33	1	3	5
	6		143.09	104	SF5	A6	A38	7	1	6	BS5	6	33	1	3	6
	7				SF6	A7	A39	7	1	7	BS6	7	33	1	3	7
	8				SF7	A8	A40	7	1	8	BS7	8	33	1	3	8
	9				SF8	A9	A41	7	1	9	BS8	9	33	1	3	9
	10				SF9	A10	A42	7	1	10	BS9	10	33	1	3	10
	11				SF10	A11	A43	7	1	11	BS10	11	33	1	3	11
	12				SF11	A12	A44	7	1	12	BS11	12	33	1	3	12
	13				SF12	A13	A45	7	1	13	BS12	13	33	1	3	13
	14				SF13	A14	A46	7	1	14	BS13	14	33	1	3	14
	15				SF14	A15	A47	7	1	15	BS14	15	33	1	3	15
	16				SF15	A16	A48	7	1	16	BS15	16	33	1	3	16
	17				SF16	A17	A49	7	2	01	BS16	17	64	1	4	1
	18				SF17	A18	A50	7	2	02	BS17	18	64	1	4	2
	19				SF18	A19	A51	7	2	03	BS18	19	64	1	4	3
	20				SF19	A20	A52	7	2	04	BS19	20	64	1	4	4
	21				SF20	A21	A53	7	2	05	BS20	21	64	1	4	5
	22				SF21	A22	A54	7	2	06	BS21	22	64	1	4	6
	23				SF22	A23	A55	7	2	07	BS22	23	64	1	4	7
	24				SF23	A24	A56	7	2	08	BS23	24	64	1	4	8
	25				XXX	A25	A57	7	2	09	XXX	25	64			
	26				XXX	A26	A58	7	2	10	XXX	26	64			
	27				XXX	A27	A59	7	2	11	XXX	27	64			
	28				XXX	A28	A60	7	2	12	XXX	28	64			
	29				XXX	A29	A61	7	2	13	XXX	29	64			
	30				XXX	A30	A62	7	2	14	XXX	30	64			
	31				XXX	A31	A63	7	2	15	XXX	31	64			
	32				XXX	A32	A64	7	2	16	XXX	32	64			

TABLE E ASSIGNMENT TABLE DBY

IDENT NO.	LINE NO.	LMCD	RELAY RACK NUMBER	UNIT NO.	STATUS						SWITCH					
					FUNC NAME	S1	S1R	TLM DS	TLM W	TLM B1	FUNC NAME	RS	RSR	TLM GR	TLM SG	TLM SP
	1				SF24	B1	B33	7	1	1	BS24	1	58			1
	2				SF25	B2	B34	7	1	2	BS25	2	58			2
	3				SF26	B3	B35	7	1	3	BS26	3	58			3
	4				SF27	B4	B36	7	1	4	BS27	4	58			4
	5				SF28	B5	B37	7	1	5	BS28	5	58			5
	6				SF29	B6	B38	7	1	6	BS29	6	58			6
	7				SF30	B7	B39	7	1	7	BS30	7	58			7
	8				SF31	B8	B40	7	1	8	BS31	8	58			8
	9				SF32	B9	B41	7	1	9	BS32	9	59			9
	10				SF33	B10	B42	7	1	10	BS33	10	59			10
	11				SF34	B11	B43	7	1	11	BS34	11	59			11
	12				SF35	B12	B44	7	1	12	BS35	12	59			12
	13				SF36	B13	B45	7	1	13	BS36	13	59			13
	14				SF37	B14	B46	7	1	14	BS37	14	59			14
	15				SF38	B15	B47	7	1	15	BS38	15	59			15
	16				SF39	B16	B48	7	1	16	BS39	16	59			16
	17				SF40	B17	B49	7	4	1	BS40	17	60			1
	18				SF41	B18	B50	7	1	2	BS41	18	60			2
	19				SF42	B19	B51	7	1	3	BS42	19	60			3
	20				SF43	B20	B52	7	1	4	BS43	20	60			4
	21				SF44	B21	B53	7	1	5	BS44	21	60			5
	22				SF45	B22	B54	7	1	6	BS45	22	60			6
	23				SF46	B23	B55	7	1	7	BS46	23	60			7
	24				SF47	B24	B56	7	1	8	BS48	24	60			8
	25				SF48	B25	B57	7	1	9	BS49	25	61			9
	26				SF49	B26	B58	7	1	10	BS50	26	61			10
	27				SF50	B27	B59	7	1	11	BS51	27	61			11
	28				SF51	B28	B60	7	1	12	BS52	28	61			12
	29				SF52	B29	B61	7	1	13	BS53	29	61			13
	30				SF53	B30	B62	7	1	14	BS54	30	61			14
	31				SF54	B31	B63	7	1	15	BS55	31	61			15
	32				SF55	B32	B64	7	1	16	BS56	32	61			16

Fig. 125—RAU Switch and Fuse Status Display Assignment Data (P/O TF608=040)

TABLE G ASSIGNMENT TABLE DBY						
IDENT NO.	LINE NO.	RAU			REPEATER	
		RR NO.	UNIT	SHELF	RR NO.	SHELF
	1	143.01	100	1	143.01	1
	2			2		2
	3			3		3
	4			4		4
	5			5		5
	6			6		6
	7					
	8					
	9	143.03	101	1	143.03	1
	10			2		2
	11			3		3
	12			4		4
	13			5		5
	14			6		6
	15					
	16					
	17	143.05	102	1	143.05	1
	18			2		2
	19			3		3
	20			4		4
	21			5		5
	22			6		6
	23					
	24					
	25	143.07	103	1	143.07	1
	26			2		2
	27			3		3
	28			4		4
	29			5		5
	30			6		6
	31					
	32					

TABLE – ASSIGNMENT TABLE DBV						
IDENT NO.	LINE NO.	RAU			REPEATER	
		RR NO.	UNIT	SHELF	RR NO.	SHELF
	1	143.09	104	1	143.09	1
	2			2		2
	3			3		3
	4			4		4
	5			5		5
	6			6		6
	7					
	8					
	9			9		
	10			10		
	11			11		
	12			12		
	13			13		
	14			14		
	15			15		
	16			16		
	17			17		
	18			18		
	19			19		
	20			20		
	21			21		
	22			22		
	23			23		
	24			24		
	25			25		
	26			26		
	27			27		
	28			28		
	29			29		
	30			30		
	31			31		
	32			32		

Fig. 126—RAU Shelf to Repeater Shelf Assignment Data (P/O TF608-040)

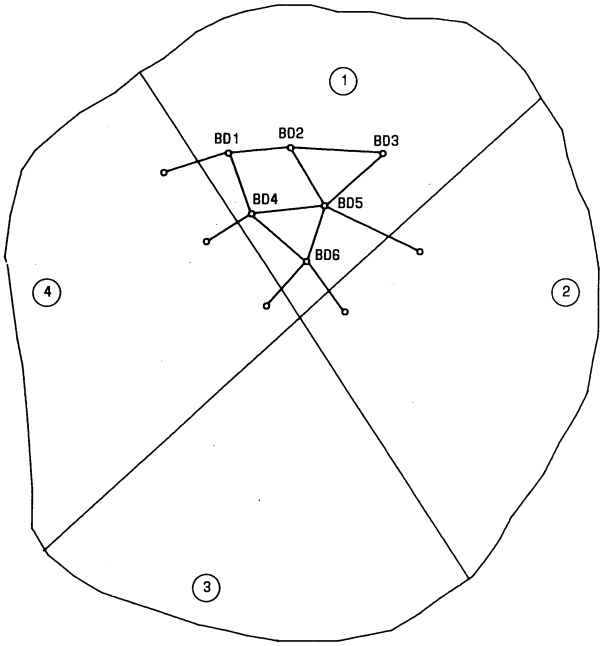

Fig. 127—Network Portions

ERROR MESSAGE	APPLICABLE TO ADD	DLT	CHG
SPELLING ERROR	X	X	X
PRIMARY KEY ERROR	X	X	X
SECONDARY KEY ERROR	X		X
INCOMPATIBLE ITEM STRING	X		X
DUPLICATE ASSIGNMENT	X		X
VALIDATION ERROR	X		X

Fig. 128—General Errors

RECORD	ERROR MESSAGE
OFF ID	"DEPENDENT DATA IN FILE: CONTROLLED SYSTEMS"
OFF ID	"DEPENDENT DATA IN FILE: TERMINATING SYSTEMS"
OFF ID	"DEPENDENT DATA IN FILE: CONTROLLED CABLES"
OFF ID	"DEPENDENT DATA IN FILE: TERMINATING CABLES"
OFF ID	"DEPENDENT DATA IN FILE: CONTROLLED PATCH LINES"
OFF ID	"DEPENDENT DATA IN FILE: CORPORATE STRUCTURE"
OFF ID	"DEPENDENT DATA IN FILE: REMOTES"
OFF ID	"DEPENDENT DATA IN FILE: NETWORK PORTIONS"
CBL ID	"DEPENDENT DATA IN FILE: PATCH LINES"
CBL ID	"DEPENDENT DATA IN FILE: SYSTEMS"
REM ID	"DEPENDENT DATA IN FILE: DETAIL DISPLAYS"
DISPL ASGNMT	"DEPENDENT DATA IN FILE: DISPLAY ASSIGNMENTS"
CRP STR ID	"DEPENDENT DATA IN FILE: CORPORATE STRUCTURE"

Fig. 129—Hierarchical Errors for Delete

RECORD	ITEM	ERROR MESSAGE
OFF ID	CONT-OFF ID	"DEPENDENT DATA IN FILE: TERMINATING SYSTEMS"
OFF ID	CONT-OFF ID	"DEPENDENT DATA IN FILE: TERMINATING CABLES"
CBL ID	SPN CONT-OFF ID	"DEPENDENT DATA IN FILE: PATCH LINES"
CBL ID	SPN CONT-OFF ID	"DEPENDENT DATA IN FILE: SYSTEMS"
REM ID	REMOTE-OFF ID	"DEPENDENT DATA IN FILE: DETAIL DISPLAYS"
DISPL ASGNMT	TABLE TYP	"DEPENDENT DATA IN FILE:DISPLAY ASSIGNMENTS"

Fig. 130—Hierarchical Errors for Change

RECORD	ERROR MESSAGE
CBL ID	"ILLEGAL STATUS: TROUBLE CASE OPEN"
SYS LO	"ILLEGAL STATUS: TROUBLE CASE OPEN"
SYS LO	"ILLEGAL STATUS: ON DISPLAY"
SYS LO	"ILLEGAL STATUS: ON PATCH"
SYS LO	"ILLEGAL STATUS: ALARM ACTIVE"
SYS LO	"ILLEGAL STATUS: PART OF PATTERN"
PL LO	"ILLEGAL STATUS: TROUBLE CASE OPEN"
PL LO	"ILLEGAL STATUS: TROUBLE CASE OPEN"
PL LO	"ILLEGAL STATUS: ALARM ACTIVE"
PL LO	"ILLEGAL STATUS: RESERVED FOR PATCH"
REMOTE	"ILLEGAL STATUS: DOWN"
DISPL ASGNMT	"ILLEGAL STATUS: ALARM ACTIVE"

Fig. 131—Status Messages for Delete and Change

```
SYSTEM IDENTIFICATION    11-17-84

A50101  T1  ABCDSTBD1 ABCDSTBD2 ABCDSTBD1

A51101  T1  ABCDSTBD1 ABCDSTBD2                              9.2

A52101  T1  ABCDSTBD1 ABCDSTBD2  84-14116

A54101  T1  ABCDSTBD1 ABCDSTBD2  AABCDSTBD1  101.01  1

***DUPLICATE ASGMNT 11-17-84 (105 T1 ABCDSTBD5 ABCDSTBD2 )
A54101  T1  ABCDSTBD1 ABCDSTBD2  ZABCDSTBD2  110.12  2
```

Fig. 132—P/O Magnetic-Tape Data Base Error Report

```
  11-17-84  100E048
                      --- SYSTEM LAYOUT ---

DESIG: 101  TYP: T1  TERM A: ABCDSTBD1  TERM Z: ABCDSTBD2

SYS CONT: ABCDSTBD1   SYS PRIOR:

AREA/MI:       /            /           /  TOT MI: 9.1

CKT ORD NO: 84-14116       EFF DATA:       ISS NO:

ISS DATE:         ISS BY:    ENGRD BY:   SLR REF NO:


TERM A: ABCDSTBD1

D BK/DGRP     RR BAY NO: 101.01     UN/SHLF NO: 1

BK TERM ASSY RR BAY NO:             UN/SHLF NO:       POS:

DSX 1         RR BAY NO:            UN/SHLF NO:       POS:


TERM Z: ABCDSTBD2

(101 T1  ABCDSTBD1  ABCDSTBD2)
   D BK/DGRP    RR BAY NO: 110.12  UN/SHLF NO: 2
                           6-------            6---

BK TERM ASSY RR BAY NO:             UN/SHLF NO:

DSX 1         RR BAY NO:            UN/SHLF NO:


TYPES OF ERRORS:
1. SPELLING  3. DUP SYSTEM  5. DUP CKT ORDER NO.
6. DUP EQUIPMENT ASSIGNMENT
```

Fig. 133—P/O Data Base Controller Error Report

```
          ------ UNSUCCESSFUL DB DELETIONS ------

    D50101  T1     ABCDSTBD1  ABCDSTBD3
      PRIMARY KEY ERROR  11-17-84

    D50101  T1     ABCDSTBD1  ABCDSTBD4
      PRIMARY KEY ERROR  11-17-84

    D50101  T1     ABCDSTBD1  ABCDSTBD5
      ILLEGAL STATUS:  ACTIVE ALARM 11-17-84

    D50101  T1     ABCDSTBD1  ABCDSTBD6
      SPELLING ERROR  11-17-84

    D02ABCDSTBD1  20111
      PRIMARY KEY ERROR  11-17-84

    D26500  ABCDSTBD1  ABCDSTBD2
      DEPENDENT DATA IN FILE:  SYSTEMS 11-17-84
```

Fig. 134—Unsuccessful Data Base Deletions

```
            ------ UNSUCCESSFUL DB CHANGES ------

C54101 T1  ABCDSTBD1  ABCDSTBD2  ZABCDSTBD2  110.12  3
  SPELLING ERROR

C58101 T1  ABCDSTBD1  ABCDSTBD3  ABCDSTBD1 ABCDSTBD2  A114.19 17 140
  PRIMARY KEY ERROR  11-17-84

C52101 T1  ABCDSTBD1  ABCDSTBD5  84-14116
  DUPLICATE ASSIGNMENT

C26500 ABCDSTBD1  ABCDSTBD2  ABCDSTBD1
  DEPENDENT DATA IN FILE:  SYSTEMS

C60800 ABCDSTBD1  ABCDSTBD2  ABCDSTBD2
  ILLEGAL STATUS:  RESERVED FOR PATCH
```

Fig. 135—Unsuccessful Data Base Changes

```
11-17-84   16:20:14                                              PAGE 1
                  T1 SYSTEM/PATCH LINE TELEMETRY ASSIGNMENTS
OFFICE: ABCDSTBD1       E2 RR BAY NO: 120.14        REMOTE ID:  ABCDSTBD1

  E-TELEMETRY                UNIT
DISPL WORD BIT  RR BAY NO SHELF POS SD      IDENTIFICATION
  7     1    1  101.01      1          101   T1   ABCDSTBD1   ABCDSTBD2
  7     1    2  101.01      2          101   T1   ABCDSTBD1   ABCDSTBD3
  7     1    3  101.01      3          101   T1   ABCDSTBD1   ABCDSTBD4
  7     1    4  101.02      1          101   T1   ABCDSTBD1   ABCDSTBD5
  7     1    5  101.02      2          101   T1   ABCDSTBD1   ABCDSTBD6
  7     1    6  101.02      3          101   T1   ABCDSTBD1   ABCDSTBD7
  7     1    7  101.03      1          102   T1   ABCDSTBD1   ABCDSTBD2
  7     1    8  101.03      2          102   T1   ABCDSTBD1   ABCDSTBD3
  7     1    9  101.03      3          103   T1   ABCDSTBD1   ABCDSTBD2
  7     1   10  101.04      1          104   T1   ABCDSTBD1   ABCDSTBD2
  7     1   11  101.04      2          UNASSIGNED
  7     1   12  101.04      3          101   T1   ABCDSTBD1   ABCDSTBD8
  7     1   13  101.05      1          102   T1   ABCDSTBD1   ABCDSTBD8
  7     1   14  101.05      2          107   T1   ABCDSTBD1   ABCDSTBD2
  7     1   15  101.05      3          101   T1   ABCDSTBD1   ABCDSTBD9
  7     1   16                         UNASSIGNED
```

Fig. 136—P/O Telemetry Assignment Report

```
11-17-84   23:43:48                                              PAGE 1

                UNMONITORED T1 SYSTEM TERMINALS

                          FOR OFFICE: ABCDSTBD1
   SYSTEM IDENTIFICATION                  BANK BAY RR BAY NO    UNIT
  101  T1     ABCDSTBD1    ABCDSTBD2        110.01               1
  102  T1     ABCDSTBD1    ABCDSTBD2        110.01               2
  103  T1     ABCDSTBD1    ABCDSTBD2        110.01               3
  101  T1     ABCDSTBD1    ABCDSTBD3        110.01               2
  101  T1     ABCDSTBD1    ABCDSTBD4        110.01               1
  102  T1     ABCDSTBD1    ABCDSTBD4        110.01               2
  103  T1     ABCDSTBD1    ABCDSTBD4        110.01               3
```

Fig. 137—Unmonitored Systems Report

TABLE A

LISTING OF DATA BASE REQUIREMENT TABLES (DRT'S) (REFER TO FIG. 62)

DATA TYPE	TABLE	TITLE	FIG.
NETWORK	25	Office Identification	15
	26	Cable Identification	16
	27	Alias Definition (Optional)	17
EFA METHOD T-CARRIER	90	System Identification	52
	91	System Administrative	53
	92	System Channel Assignment	54
	93	Equipment Type Definition	55
	94	System Terminal Assignment	56
	95	Terminal DSX Assignment	57
	96	Cable Span Assignment	58
	97	Repeater Span Assigments	59
	98	System Span Slot Assignment	60
	99	Repeater Span Slot Assignment	61
SLR METHOD T-CARRIER	50	System Identification	33
	51	System Area Mileage (Optional)	34

TABLE A (Contd)

LISTING OF DATA BASE REQUIREMENT TABLES (DRT'S) (REFER TO FIG. 62)

DATA TYPE	TABLE	TITLE	FIG.
SLR METHOD T-CARRIER	52	System Circuit Order	35
	53	System Issue	36
	54	System Terminal	37
	55	System Bank Terminating Assembly (Optional)	38
	56	System Terminal DSX (Optional)	39
	57	System Office Repeater DSX (Optional)	40
	58	System Office Repeater	41
	59	System Cable and Manhole Repeater	42
	DF	Derived Facility Assignment	43
	60	Patch Line Identification	44
	61	Patch Line Mileage (Optional)	45
	62	Patch Line Circuit Order (Optional)	46
	63	Patch Line Issue (Optional)	47

TABLE A (Contd)

LISTING OF DATA BASE REQUIREMENT TABLES (DRT'S) (REFER TO FIG. 62)

DATA TYPE	TABLE	TITLE	FIG.
SLR METHOD T-CARRIER	67	Patch Line Office Repeater DSX (Optional)	48
	68	Patch Line Office Repeater (Optional)	49
	69	Patch Line Cable and Manhole repeater (Optional)	50
	82	Repeater DSX Assignment	51
TELEMETRY REMOTE IDENTIFICATION	01	Status Display Type	2
	02	CGA Status Assignment	3
	03	MLSI Status Assignment	4
	04	Fuse Status Assignment	5
	05	High-Capacity Frame Alarm Set Assignment	6
	06	Miscellaneous Equipment Status Assignment	7
	07	Miscellaneous Equipment Alarm Definition Assignment	8
	08	User-Defined Alarm Set Message Assignment	9
	11	Switch Subgroup Type	10

TABLE A (Contd)

LISTING OF DATA BASE REQUIREMENT TABLES (DRT'S) (REFER TO FIG. 62)

DATA TYPE	TABLE	TITLE	FIG.
TELEMETRY SWITCH SUBGROUP	12	RAU Switch Point Assignment	11
	13	RAU Shelf Assignment	12
	14	ACO Switch Point Assignment	13
	15	Miscellaneous Equipment Switch Point Assignment	14
TELEMETRY DATA PORT	28	Remote Identification	18
	37	TCAS Data Port Definition	26
	39	Remote Data Port Definition	27
	40	Switch Machine Definition	28
	41	Scan Point Assignment	29
	43	TASC Remote Identification	30
	44	DACS Digroup Assignment	31
	45	D5 Frame Digroup Assignment	32
ADMINISTRATIVE	29	Network Portion Definition	19
	31	Corporate Structure Department Definition	20

TABLE A (Contd)

LISTING OF DATA BASE REQUIREMENT TABLES (DRT'S) (REFER TO FIG. 62)

DATA TYPE	TABLE	TITLE	FIG.
ADMINISTRATIVE	32	Corporate Structure Area Definition	21
	33	Corporate Stucture Division Definition	22
	34	Corporate Structure District Definition	23
	35	Corporate Structure Subdistrict Definition	24
	36	Corporate Structure office Definition	25

TABLE B

LISTING OF DATA BASE MASKS (REFER TO FIG. 62)

DATA TYPE	MASK	TITLE	FIG.
NETWORK	25	Office Identification	78
	26	Cable Identification	79
	27	Alias Definition (Optional)	80
EFA METHOD T-CARRIER	90	System Identification	107
	92	System Channel Assignment	108
	93	Equipment Type Definition	109
	94	System Terminal Assignment	110
	95	Terminal DSX Assignment	111
	96	Cable and Repair Span Assignment	112
	98	System Span Assignment	113
	99	Repeater to Span Slot Assignment	114
SLR METHOD T-CARRIER	50	T-Carrier System Layout	96
	51	System Layout Page 1	97
	52	System Layout Page 2	98
	53	System Layout Page 2	99

TABLE B (Contd)

LISTING OF DATA BASE MASKS (REFER TO FIG. 62)

DATA TYPE	MASK	TITLE	FIG.
SLR METHOD T-CARRIER	54	System Layout Page 2	100
	60	T-Carrier Patch Line Layout Page 1	101
	61	T-Carrier Patch Line Layout Page 2	102
	62	T-Carrier Patch Line Layout Page 2	103
	63	T-Carrier Patch Line Layout	104
	64	T-Carrier Patch Line Layout	105
	82	Repeater DSX Assignment	106
TELEMETRY REMOTE IDENTIFICATION	01	Status Display Assignment	65
	02	CGA Assignment	66
	03	MLSI Assignment	67
	04	Fuse Status Assignment	68
	05	High-Capacity Alarm Set Assignment	69
	06	Miscellaneous Equipment Status Assignment	70

TABLE B (Contd)

LISTING OF DATA BASE MASKS (REFER TO FIG. 62)

DATA TYPE	MASK	TITLE	FIG.
	07	Miscellaneous Equipment Alarm Definition Assignment	71
	08	High-Capacity Alarm Set Assignment Frame Type	72
TELEMETRY SWITCH SUBGROUP	11	Switch Subgroup Type	73
	12	RAU Switch Point Assignment	74
	13	RAU Shelf Assignment	75
	14	ACO Switch Point Assignment	76
	15	Miscellaneous Equipment Switch Point Assignment	77
TELEMETRY DATA PORT	28	Remote Identification	81
	37	TCAS Data Port Definition	89
	39	Remote Data Port Definition	90
	40	Switching Machine Definition	91
	41	Scan Point Assignment	92
	43	TASC Remote Identification	93
	44	DACS Digroup Assignment	94

TABLE B (Contd)

LISTING OF DATA BASE MASKS (REFER TO FIG. 62)

DATA TYPE	MASKS	TITLE	FIG.
	45	D5 Digroup Assignment	95
ADMINISTRATIVE	29	Network Portion Definition	82
	31	Corporate Structure Department Definition	83
	32	Corporate Structure Area Definition	84
	33	Corporate Stucture Division Definition	85
	34	Corporate Structure District Definition	86
	35	Corporate Structure Sub-District Definition	87
	36	Corporate Structure Office Definition	88

▶TABLE C◀

CROSS-REFERENCE OF DATA REQUIREMENT TABLES (DRTs) ITEM NAME ABBREVIATIONS TO CODE CATALOG ITEM NUMBERS

ITEM NAME ABBR.	ITEM NUMBER	ITEM NAME ABBR.	ITEM NUMBER
ACO EQP'D FLG	112	DEPT	802
ACO EXCT-D FLG	973	DIALOGUE	750
ACO PMT'D FLG	114	DIG SIG LEV	701
ACTN CD	719	DIRN	704
ALIAS FLG	951	DISC PRTN	769
ALM PLG FLG	513	DIST	805
ALM NO	528	DIV	804
ALM STAT	923	DLM ABV FLG	972
ALM TH STAT	926	DLM AC FLG	967
AREA	803	DLM ALL1 FLG	965
AREA CODE	793	DLM AVAIL FLG	958
ASCII	902	DLM BUSY FLG	959
AUTO SECTNLZN FLG	957	DLM CM FLG	968
AUTO TC FLG	488	DLM EQPT FLG	115
AZ LM FLG	961	DLM ESOVF FLG	966
BAY	102	DLM EVOVF FLG	963
BELL FLG	489	DLM EVT	782
BLK NO	752	DLM LG FLG	969
BTA POS	309	DLM MEAS ABT'D FLG	960
BTH ENDS RPTD STAT	917	DLM MF FLG	970
CA DESIG	205	DLM QRSS FLG	971
CA PR	203	DLM RED FLG	987
CBL PATT NOW FLG	980	DLM T1 FLG	964
CBL PATT REC FLG	979	DLM YEL FLG	988
CBL PATT TDY FLG	978	DSX POS	308
CDT NO	728	DS1 FLG	485
CGA FREQ	711	DY	602
CGA MOND FLG	110	DY OF MO	609
CGA RATE TH STAT	921	DY OF WK	610
CGA STAT	932	E FAC FAIL TYP	753
CHAN	204	E ODD DA WD	516
CHAR CT	938	E REM FAIL TYP	754
CHAR FMT	739	EQPT CL	729
CKT ORD NO	705	EQPT TYPE	311
CMT NO	720	END	703
CMPTR STAT	758	ENT STAT	910
COMP CD WD CT	934	ERR FILE FLG	773
CONTR TYP	772	ERR REF NO	768
CPR LEV NO	913	EXCHANGE	794
CTR	741	E2 DISPL TYP	508
CXR REF NO	915	FRAC OF SYS	778
DA BS ACTN CD	734	FAIL RATE	742
DATA RATE	511	FILE MNGR WD	906
DATE	601	FILE NM	929
DED RPTR FLG	206	FILE NO	904

TABLE C (Contd)

CROSS-REFERENCE OF DATA REQUIREMENT TABLES (DRTs)
ITEM NAME ABBREVIATIONS TO CODE CATALOG ITEM NUMBERS

ITEM NAME ABBR.	ITEM NUMBER	ITEM NAME ABBR.	ITEM NUMBER
FXD CD	931	OFF Z ACO'D FLG	986
FXD FRM TYP	319	OP FLG	722
FOREIGN OFF FLG	106	OPT SET NM	746
FUNC	402	OPT SET SEQ NO	935
HOLDING MIN	619	PATT GR NO	714
HR	614	PATT VRFD FLG	977
HR OF DY	611	POS	104
IDX	907	POS CTR	781
INDEX INPUT TYPE	796	PRIM SW MACH FLG	788
INTLS	708	PRMTR CHG	760
ISS NO	707	PRMTR LBL FLD	779
ITEM NM ABBR	737	PRMTR NO	762
ITEM NO	736	PROG NO	749
ITEM STRING MNEMONIC	912	PTCH DN STAT	944
ITEM STRG NO	911	PTCH LN ALM	941
KYWD	747	PTCH LN CL	702
LEAST LD INHD FLG	727	PTCH LN REF NO	744
LN NO	733	PTCH LN STAT	780
LGCL REM	928	PTCH STAT	922
LOG ACTIVITY FLG	487	PTCH TYP	774
LP BK LOCN	770	PTCH UP STAT	943
LP BK MODE	771	QUE NO	936
MAGC TP LBL	756	RAU SHLF	519
MAN OPN PATT FLG	976	RCD NO	751
MH RPTR CSE	305	RCD TYP	735
MH RPTR SD	303	RED ALM STAT	924
MH RPTR SKT	306	RED MOND FLG	111
MI	706	RELATIVE TRACK	908
MIN	605	BAY	102
MIN OF HR	612	REM ADDR	501
MISC EQPT FLD 1	117	REM DA PORT NO	522
MISC EQPT FLD 2	118	REM ID	509
MLSI MOND FLG	113	REM MOND FLG	111
MNEMONIC MO OF YR	608	REM OOS FLAG	517
MO	603	REM TYPE	512
MON DISPL UPD INT	777	REPT CONST FLG	996
NO TBL FND FLG	974	REPT COWRK FLG	997
NTC NO	721	REPT DAILY FLG	764
NUM MO OF YR	607	REPT MTHLY FLG	766
OCTAL	901	REPT PATCH FLG	995
OFF A ACO'D FLG	985	REPT QTRLY FLG	767
OFF ID	101	REPT STAT FLG	994
OFF RCD DWG NO	730	REPT WKLY FLG	765
OFF RPTR POS	302	REM TYPE	512
OFF RPTR SD	303	RK IN TBL CSE	718

TABLE C (Contd)

CROSS-REFERENCE OF DATA REQUIREMENT TABLES (DRTs)
ITEM NAME ABBREVIATIONS TO CODE CATALOG ITEM NUMBERS

ITEM NAME ABBR.	ITEM NUMBER	ITEM NAME ABBR.	ITEM NUMBER
RLTV WD	909	SW PT	507
RPLY TYP	937	SW MACH	207
ROUTE DESIG	893	SW SGRP TYPE	518
RPT NO	740	SYS DESIG	201
RSTN PTCH STAT	954	SYS EXPRNC CGA FLG	984
RSV STAT	942	SYS PRIORITY	717
SCHED CHG	759	SYS REF NO	743
SCHED TASK	763	SYS STAT	757
SCHED TASK NO	761	SYS TH TM INT	776
SD	105	SYS TYPE	202
SD SYS PATT FLG	981	TABLE NO	732
SEC OF MIN	613	TABLE IDX	933
SEG NO	905	TBL CSE NO	716
SECTNLZN IN PROG	955	TBL FND FLG	975
SECTNLZN TCO FLG	956	TCAS DA PORT NO	520
SGL OTG TH	920	TCAS DA PORT TYPE	521
SH CTR	755	TCAS ID	209
SH OTG TH STAT	919	TELCO TBL TYP	724
SHLF	103	TCS DISPL STAT	918
SHLF PATT FLG	982	TCT NO	510
SLOT	310	TELCO	801
SLOT GR	313	TEL NO	795
SLR REF NO	709	TERM BAY PATT FLG	983
SNPT	523	TERM MOND FLG	952
SPN DESIG	713	TERM TYPE	317
SPN LN CL	712	TLC ST # BLDG	116
STAT BIT	504	TH GR	748
STAT DISPL	502	TLM ADT STAT	927
STAT DISPL PLG FLG	514	TLM RPTD STAT	925
STAT DISPL TYPE	731	TM	602
SW GR	505	UCL FLG	775
STAT DISPL PLG FLG	514	UNAV SLOT	314
SW GRP	506	UNIT	103
SW PT	507	UNMOND STAT	945
STAT WD	503	VD FOR EQPT ID	107
TASC STA NO	525	VD FOR SPN CONT ID	109
SUBDISTRICT	806	VD FOR SYS CONT ID	108
SW GR	505	VERB	745
SW SGRP	506	VRBL CD	738
SW PRIOR	710	WD NO	930
		YR	606
		ZA LM FLG	962

->TABLE D<-

TCAS CODE CATALOG

ITEM NUMBER: 101

Item Name: OFFICE IDENTIFICATION

Item Name Abbreviation: OFF ID

Item Description: Identifies a building subdivision or nonbuilding location.

Item Character Code:

Category: Variable

Code is: Recommended code is CCLI (common language identification) per Practice 795-100-100.

Example: ABCDCA01F11
Where: ABCD is a place
CA is a state
01 is a building (Building 1)
F11 is a building subdivision (Frame 11)

ITEM NUMBER: 102

Item Name: RELAY RACK BAY NUMBER (D BANK)

Item Name Abbreviation: BAY

Item Description: Identifies the position of a relay rack bay within a given building.

Item Character Code:

Category: Variable

Code is: Recommended code is the the relay rack number per Practice 800-610-156.

Example: 1401.22
Where: 14 is the floor
01 is line-up
22 is the bay within the line-up

->TABLE D (Contd)<-

TCAS CODE CATALOG

ITEM NUMBER: 103

Item Name: SHELF or UNIT

Item Name Abbreviation: SHLF or UNIT

Item Description: Identifies a shelf or unit of equipment within a relay rack as it is identified at the installation.

Item Character Code:

Category: Variable

Code is: Recommended code for shelf is the common language bay shelf code per Practice 751-100-165. There is no recommended code for unit.

Example: 6 for shelf 6 within a repeater bay.
110 for D1 unit within an office.
4 for D3 unit within a bay.
6 for repeater shelf 6 within a bay.
1-12 for M1C muldem within a bay.

ITEM NUMBER: 104

Item Name: POSITION

Item Name Abbreviation: POS

Item Description: Identifies the position of a circuit pack on a shelf.

Item Character Code:

Category: Fixed code

Code is: A decimal code from 000 to 999. The recommended subset of these codes is the proposed common language - Bay Shelf position Code per Practice 751-100-165.

Example: 009 for position 9

->TABLE D (Contd)<-

TCAS CODE CATALOG

ITEM NUMBER: 105

Item Name: SIDE

Item Name Abbreviation: SD

Item Description: Identifies the side of a given circuit pack.

Item Character Code:

Category: Fixed code

Code is: The Common Language-Repeater Side Code per Practice 751-100-350. The following are the codes:

0 side not required
1 side 1
2 side 2

Example: 2 for side 2 of a 201 repeater

ITEM NUMBER: 106

Item Name: FOREIGN OFFICE FLAG

Item Name Abbreviation: FOREIGN OFF FLG

Item Description: Identifies an office where the SLR equipment assignment information is not available to the user. An example might be an independent company office.

Item Character Code:

Category: Fixed

Code is: Y for foreign
N for not foreign

Example: Y for foreign

->TABLE D (Contd)<-

TCAS CODE CATALOG

ITEM NUMBER: 107

Item Name: VAILD FOR EQUIPMENT IDENTIFICATION

Item Name Abbreviation: VD FOR EQPT ID

Item Description: Indicates whether a given office identification is valid for either routing or D bank/digroup identification on a system layout record.

Item Character Code:

Category: Fixed code

Code is: Y for valid and N for not valid

Example: Y for vaild

ITEM NUMBER: 108

Item Name: VALID FOR SYSTEM CONTROL IDENTIFICATION

Item Name Abbreviation: VD FOR SYS CONT ID

Item Description: Indicates whether an office identification is valid as a system control office.

Item Character Code:

Category: Fixed code

Code is: Y for valid and N for not valid

Example: Y for valid

->TABLE D (Contd)<-

TCAS CODE CATALOG

ITEM NUMBER: 109

Item Name: VALID FOR SPAN CONTROL IDENTIFICATION

Item Name Abbreviation: VD FOR SPN CONT ID

Item Description: Indicates whether an office identification is valid as a span control office.

Item Character Code:

Category: Fixed code

Code is: Y for valid and N for not valid

Example: Y for valid

ITEM NUMBER: 110

ITEM NAME: CGA MONITORED FLAG

ITEM NAME ABBREVIATION: CGA MOND FLG

ITEM DESCRIPTION: Indicates whether D bank/digroup CGA alarms are monitored in a given office.

ITEM CHARACTER CODE:

CATEGORY: Fixed code

CODE IS: Y for monitored and N for not monitored

EXAMPLE: Y for monitored

->TABLE D (Contd)<-

TCAS CODE CATALOG

ITEM NUMBER: 111

Item Name: RED MONITORED FLAG

Item Name Abbreviation: RED MOND FLG

Item Description: Indicates whether D bank/digroup red alarms are monitored in a given office.

Item Character Code:

Category: Fixed code

Code is: Y for monitored and N for not monitored

Example: Y for monitored

ITEM NUMBER: 112

Item Name: ACO EQUIPPED FLAG

Item Name Abbreviation: ACO EQP'D FLG

Item Description: Indicates whether D bank/digroup ACO's are controlled in a given office.

Item Character Code:

Category: Fixed code

Code is: Y for controlled and N for not controlled

Example: Y for controlled

->TABLE D (Contd)<-

TCAS CODE CATALOG

ITEM NUMBER: 113

Item Name: MLSI MONITORED FLAG

Item Name Abbreviation: MLSI MOND FLG

Item Description: Indicates whether the maintenance line status indicators are monitored in a given office.

Item Character Code:

Category: Fixed code

Code is: Y for monitored and N for not monitored

Example: Y for monitored

ITEM NUMBER: 114

Item Name: ALARM CUTOFF PERMITTED FLAG

Item Name Abbreviation: ACO PMT'D FLAG

Item Description: Indicates whether the T-Carrier System terminal bay ACOs are controlled by the TCAS for a given office. The ACO feature, which applied on a per bay basis, has been rated MD (manufacture discontinued). The same flag is used to specify whether the new alarm disable feature is applicable on a per office basis.

Item Character Code:

Category: Fixed

Code is: Y for controlled

N for not controlled

->TABLE D (Contd)<-

TCAS CODE CATALOG

ITEM NUMBER: 115

Item Name: DIRECTED LINE MONITOR EQUIPPED FLAG

Item Name Abbreviation: DLM EQPT FLG

Item Description: Indicates whether a telemetry remote is equipped with a DLM (directed line monitor).

Item Character Code:

Category: Fixed

Code is: Y for equipped
N for not equipped

Example: Y for equipped.

ITEM NUMBER: 116

Item Name: PLACE, STATE, BUILDING

Item Name Abbreviation: TLC ST # BLDG

Item Description: Indicates a building location within a city and state.

Item Character Code:

Category: Variable

Code is: Recommended code is CCLI (common language identification) per Practice 795-100-100.

Example: ABCDCA01
Where: ABCD is a place
CA is a state
01 is a building (Building 1)

->TABLE D (Contd)<-

TCAS CODE CATALOG

ITEM NUMBER: 117

Item Name: MISCELLANEOUS EQUIPMENT FIELD 1

Item Name Abbreviation: MISC EQPT FLD 1

Item Description: Identifies a miscellaneous equipment item.

Item Character Code:

Category: Variable

Code is: There is no recommended code. Use a reasonable code for identification (up to 10 character spaces).

Example: SMOKE DECT for a smoke detector

ITEM NUMBER: 118

Item Name: MISCELLANEOUS EQUIPMENT FIELD 2

Item Name Abbreviation: MISC EQPT FLD 2

Item Description: Identifies a specific nomenclature about a miscellaneous equipment item.

Item Character Code:

Category: Variable (optional)

Code is: There is no recommended code. Use a reasonable code for identification (up to 4 character spaces).

Example: 3A12 for a specific identification for a smoke detector

->TABLE D (Contd)<-

TCAS CODE CATALOG

ITEM NUMBER: 201

Item Name: SYSTEM DESIGNATION

Item Name Abbreviation: SYS DESIG

Item Description: Identifies a particular carrier system of a given type between two given terminal locations.

Item Character Code:

Category: Variable

Code is: Recommended code is the common language facility designation per Practices 795-450-100, 795-450-104, 795-450-106, 795-450-107,and 795-450-108.

Example: 101 for a T1-Carrier System between two given offices.

ITEM NUMBER: 202

Item Name: SYSTEM TYPE

Item Name Abbreviation: SYS TYPE

Item Description: Identifies the type of carrier system connecting two terminal locations.

Item Character Code:

Category: Variable

Code is: Recommended code is the common language facility type per Practices 795-450-100, 795-450-104, 795-450-106, 795-450-107, and 795-450-108.

Example: T1- for T1 Carrier.

->TABLE D (Contd)<-

TCAS CODE CATALOG

ITEM NUMBER: 203

Item Name: CABLE PAIR

Item Name Abbreviation: CA PR

Item Description: Identifies a pair within a given cable.

Item Character Code:

Category: Fixed

Code is: A number between 0 and 32767

Example: 55 (indicated cable pair 55)

ITEM NUMBER: 204

Item Name: CHANNEL

Item Name Abbreviation: CHA

Item Description: Identifies a particular assignable channel of a high-capacity carrier system between two muldem offices.

Item Character Code:

Category: Variable

Code is: Recommended code is the common language channel/pair assignments per Practices 795-450-100, 795-450-104, 795-450-106, 795-450-107, and 795-450-108.

Example: 2 (indicates a 2nd channel of a T2 carrier)

->TABLE D (Contd)<-

TCAS CODE CATALOG

ITEM NUMBER: 205

Item Name: CABLE DESIGNATION

Item Name Abbreviation: CA DESIG

Item Description: Identifies a particular cable of a group of cables between two given locations.

Item Character Code:

Category: Variable

Code is: Recommended code is common language facility designations per Practices 795-450-100 and 795-450-101.

Example: 100 (indicates cable 100)

->TABLE D (Contd)<-

TCAS CODE CATALOG

ITEM NUMBER: 206

Item Name: DEDICATED REPEATER FLAG

Item Name Abbreviation: DED RPTR FLG

Item Description: Identifies the group of 25 span slots in a span terminate on a pair of office repeater shelves in a uniform dedicated way.

Item Character Code:

Category: Fixed

Code is: Y for standard dedication which is for 206, 220, and 221 type repeaters where the 13 repeaters on the "lower" shelf are wired with position 1 to slot 1, position 2 to slot 2, etc.; and the 12 repeaters on the "upper" shelf are wired with position 1 to slot position 14, position 2 to slot 15, etc. Standard dedication for 201 repeaters is where the 6 repeaters on the lower shelf are wired with position 1 side 1 to slot 1, position 1 sise 2 to slot 2, etc., and the 6 repeaters on the upper shelf are wired with position 1 side 1 to slot 13,position 1 side 1 to slot 14, etc. The 201 repeater for the 25th slot is specified independently.

X for special dedication which is only applicable to 206 repeater arrangements where position 1 on the lower shelf is wired to slot 1, position 1 on the upper shelf is wired to slot 2, position 2 on the lower shelf is wired to slot 3, etc.

N for nondedicated which is applicable where neither of the above arrangements exist.

Example: Y for a standard dedication arrangement.

->TABLE D (Contd)<-

TCAS CODE CATALOG

ITEM NUMBER: 207

Item Name: SWITCHING MACHINE

Item Name Abbreviation: SW MACH

Item Description: Identifies an ESS switching machine which has carrier scan point data that is reported to a SCCS central. The code must be unique within a particular SCCS.

Item Character Code:

Category: Variable

Code is: No recommended code.

Example: ABCDCA01 for the ESS switching machine 1.

ITEM NUMBER: 209

Item Name: TCAS IDENTIFICATION

Item Name Abbreviation: TCAS ID

Item Description: Identifies a TCAS central unit uniquely when several TCAS central units are linked together using the TCAS-to-TCAS data link feature.

Item Character Code:

Category: Variable (5 character maximum)

Code is: Must be different form other identifications in the network.

Example: WSNC1 is a TCAS identification for a TCAS in Winston-Salem, North Carolina.

->TABLE D (Contd)<-

TCAS CODE CATALOG

ITEM NUMBER: 302

Item Name: OFFICE REPEATER POSITION

Item Name Abbreviation: OFF RPTR POS

Item Description: Identifies an office repeater position within a given office repeater shelf.

Item Character Code:

Category: Fixed

Code is: Required code is common language bay shelf position per Practice 751-100-165. Allowable codes are:

1 to 6 for 201 repeaters
1 to 13 for 206, 220, and 221 repeaters

Example: 12 for the 12th position.

->TABLE D (Contd)<-

TCAS CODE CATALOG

ITEM NUMBER: 303

Item Name: OFFICE REPEATER SIDE

Item Name Abbreviation: OFF RPTR SD

Item Description: Identifies an office repeater side for a given office repeater position.

Item Character Code:

Category: Fixed

Code is: Required code is the common language repeater side code per Pracitce 751-100-350. Allowable codes are:

1 for side 1 of a 201 repeater
2 for side 2 of a 201 repeater
0 for a 206, 220, and 221 repeater

Example: 2 for side 2 of a 201 repeater

ITEM NUMBER: 305

Item Name: MANHOLE REPEATER CASE

Item Name Abbreviation: MH RPTR CSE

Item Description: Identifies a T1 or T1C manhole repeater case in a given cable between two adjacent locations.

Item Character Code:

Category: Variable

Code is: No recommended code

Example: 1 for case 1 or A for case A.

->TABLE D (Contd)<-

TCAS CODE CATALOG

ITEM NUMBER: 306

Item Name: MANHOLE REPEATER SOCKET

Item Name Abbreviation: MH RPTR SKT

Item Description: Identifies a T1 or T1C manhole repeater socket with a given manhole repeater case.

Item Character Code:

Category: Fixed

Code is: Required code is per Practice 640-525-210. Sockets shall be numbered 1 to 25.

Example: 10 for the 10th socket.

ITEM NUMBER: 307

Item Name: MANHOLE REPEATER SIDE

Item Name Abbreviation: MH RPTR SD

Item Description: Identifies a T1 or T1C manhole repeater side for a given manhole repeater socket.

Item Character Code:

Category: Fixed

Code is: Required code is the common language repeater side code per Practice 751-100-350. Allowable codes are:

1 for side 1
2 for side 2

Example: 1 for side 1.

->TABLE D (Contd)<-

TCAS CODE CATALOG

ITEM NUMBER: 308

Item Name: DIGITAL SYSTEM CROSS-CONNECT POSITION

Item Name Abbreviation: DSX POS

Item Description: Identifies a jack field on a given DSX shelf (panel).

Item Character Code:

Category: Fixed

Code is: Required code is the common language bay shelf position per Practice 751-100-165. Code shall be a number from 1 to 99.

Example: 20 for the 20th jack field.

ITEM NUMBER: 309

Item Name: BANK TERMINATING ASSEMBLY POSITION

Item Name Abbreviation: BTA POS

Item Description: Identifies the position of a BTA on a given shelf.

Item Character Code:

Category: Fixed

Code is: Required code is a subset of the common language bay position per Practices 795-450-100 and 795-450-101. Code shall be a number from 1-12.

->TABLE D (Contd)<-

TCAS CODE CATALOG

ITEM NUMBER: 31Ø

Item Name: SLOT

Item Name Abbreviation: SLOT

Item Description: Identifies an assignable bi-directional span line in a span between a set of adjacent offices.

Item Character Code:

Category: Fixed

Code is: Required code is a number from 1 to 25 for slots 1 to 25.

Example: 1 for slot 1.

->TABLE D (Contd)<-

TCAS CODE CATALOG

ITEM NUMBER: 311

Item Name: EQUIPMENT TYPE

Item Name Abbreviation: EQPT TYPE

Item Description: Identifies a terminal, office repeater shelf or DSX panel by equipment type.

Item Character Code:

Category: Fixed

Code is: Required code is based on the common language equipment identification per Practice 795-200-006 but is not identical to the common language codes in all cases. In addition, TCAS requires only that the first four characters of the code conform to the values specified below while the remainder are not checked. Allowable codes for the first four characters are:

D1CB for D1 channel bank
D2CB for D2 channel bank
D3CB for D3 channel bank
D4CB for D4 channel bank
DCCB for DCT (digital carrier terminal) channel bank
DTU1 for Digroup Terminal Unit
DXCB for other channel bank - T1 level
D4LI for D4 line interface unit - T1C level
DMM1 for Digital Multiplexer - muldem for DS1 to higher level
DMM2 for Digital Multiplexer - muldem for DS2 to higher level
DMM3 for Digital Multiplexer - muldem for DS3 to higher level
T1ST for Office Repeater Mounting - 201 type
T1MR for Office Repeater Mounting - 206, 220,and 221 type
T1PX for DSX Panel

Example: D1CB for D1 channel bank.

->TABLE D (Contd)<-

TCAS CODE CATALOG

ITEM NUMBER: 313

Item Name: SLOT GROUP

Item Name Abbreviation: SLOT GR

Item Description: Identifes the group of slots in a span that are associated with the lower or upper office repeater shelves for 206, 220, and 221 repeaters, and with the lower or upper shelves or slots 25 for 201 repeaters.

Item Character Code:

Category: Fixed

Code is: LS for slots 1-13 (206, 220,and 221 repeaters and 1-12 for 201 repeaters)
US for slots 14-25 (206, 220, and 221 repeaters and 13-24 for 201 repeaters)
25 for slot 25 for 201 repeaters

Example: LS for slot 1 for a 206-type repeater.

ITEM NUMBER: 314

Item Name: UNAVAILABLE SLOT

Item Name Abbreviation: UNAV SLOT

Item Description: The specifications for unavailable slots are not contained in the Data Requirements Tables. The term is applicable for use on the EFA Span Assignment mask to identify unassignable slots. The entries are made in the system designation field.

Item Character Code:

Category: Fixed

Code is: DEF for defective
H88TC for H88 loaded trunk cable
NLHT for not equipped with repeaters

Example: DEF for defective slot.

->TABLE D (Contd)<-

TCAS CODE CATALOG

ITEM NUMBER: 317

Item Name: TERMINAL TYPE

Item Name Abbreviation: TERM TYPE

Item Description: Identifies a T-Carrier System terminal by equipment type.

Item Character Code:

Category: Fixed

Code is: Required code is based on common language equipment identification per Practice 795-200-006 but is not identical to common language codes in all cases. In addition, TCAS requires only that the first four characters of the code conform to the values specified below while the remainder are not checked. Allowable codes for the first four characters are:

D1CB for D1 channel bank
D2CB for D2 channel bank
D3CB for D3 channel bank
D4CB for D4 channel bank
D5CB for D5 channel bank
DCCB for DCT channel bank
DTU1 for Digroup Terminal Unit
DXCB for other channel bank
D4LI for D4 Interace Unit - T1C level
DMM1 for Digital Multiplexer - Muldem for DS1 to higher level
DMM2 for Digital Multiplexer - Muldem for DS2 to higher level
DMM3 for Digital Multiplexer - Muldem for DS3 to higher level
D1U1 for D1F termination frames
T1DA for DACS (Digital Access Cross-Connect System)

Example: D1CB for a D1 channel bank

->TABLE D (Contd)<-

TCAS CODE CATALOG

ITEM NUMBER: 319

Item Name: FIXED FRAME TYPE

Item Name Abbreviation: FXD FRM TYP

Item Description: Identifies a fixed frame type.

Item Character Code:

Category: Fixed

Code is: Required code as follows:

FIXED FRAME TYPE	CHARACTER CODE
J98716C: 7'Ø" dbl bay w/2Ø M12 muldems (48v)	DMBAA1Ø
J98716C: 7'Ø" dbl bay w/2Ø M12 muldems (24v)	DMBAA2Ø
J98716B: 9'Ø" dbl bay w/24 M12 muldems (48v)	DMBAB1Ø
J98716B: 9'Ø" dbl bay w/24 M12 muldems (24v)	DMBAB2Ø
J98716A: 11'6" dbl bay w/16 M12 muldems (48v)	DMBAC1Ø
J98716A: 11'6" dbl bay w/16 M12 muldems (24v)	DMBAC2Ø
J98716D: 11'6" dbl bay w/24 M12 muldems (48v)	DMBAD1Ø
J98716D: 11'6" dbl bay w/24 M12 muldems (24v)	DMBAD2Ø
J98724A: 7'Ø" bay w/2 M13 muldems	DMBBA-Ø
no switch, no order wire	DMBBAØØ
manual switch, no order wire	DMBBA1Ø
manual switch, with order wire	DMBBA2Ø
automatic, no order wire	DMBBA3Ø
J98734L: LTMA, DSX1 terminal	M3MA1AØ
J98734L: LTMA, drop/insert capability at DS1	M3MA1BØ
J98734L: LTMA, DSX1C terminal	M3MA1CØ
J98734L: LTMA, drop/insert capability at DS1C	M3MA1DØ
J98734L: LTMA, DSX2 terminal	M3MA1EØ
J98734L: LTMA, drop/insert capability at DS2	M3MA1FØ
J98734M: MX3 MA, DSX1 terminal	M3MA2AØ
J98734M: MX3 MA drop/insert cabability at DS1	M3MA2BØ
J98734M: MX3 MA, DSX1C terminal	M3MA2CØ
J98734M: MX3 MA drop/insert capability at DS1C	M3MA2DØ
J98734M: MX3 MA, DS21 terminal	M3MA2EØ
J98734M: MX3 MA drop/insert capability at DS2	M3MA2FØ
7'Ø" bay w/2 M34A muldems	DMBCA-Ø
equipped for local telephone	DMBCA1Ø
equipped with digital network order wire	DMBCA2Ø
local order wire	DMBCA3Ø
other	DMBCA4Ø

->TABLE D (Contd)<-

TCAS CODE CATALOG

ITEM NUMBER: 319 (Contd)

FIXED FRAME TYPE	CHARACTER CODE
7'0" bay w/2 M34 muldems	DMBCB-0
equipped for local telephone	DMBCB10
equipped with digital network order wire	DMBCB20
local order wire	DMBCB30
other	DMBCB40
Monitor and switch bay	DMBC1-0
equipped for local telephone	DMBC110
equipped with digital network order wire	DMBC120
local order wire	DMBC130
other	DMBC140
Equipped with 1 M34 muldem	DMBCC-0
equipped for local telephone	DMBCC10
equipped with digital network order wire	DMBCC20
local order wire	DMBCC30
other	DMBCC40
J98721A: 6 two-way T4M lines (48v)	T4BTA-0
no digital network order wire	T4BTA00
with digital network order wire	T4BTA10
J98721A & J98721B: 11 two-way T4M lines (48v)	T4BTB-0
no digital network order wire	T4BTB00
with digital network order wire	T4BTB10
J98721A: 6 two-way T4M lines (130v)	T4BTA-1
no digital network order wire	T4BTA01
with digital network order wire	T4BTA11
J98721A & J98721B: 11 two-way T4M lines (130v)	T4BTB-1
no digital network order wire	T4BTB01
with digital network order wire	T4BTB11
J98734A: MX3 LTF, 20 FT3 lines	M3BLA00
J98734C:MX3C monitor and control 10 FT3C lines	M3BLC00
J98734E:MX3 MF,monitor and control 18 DS3 line	M3BMA00
MX3 digital multiplex terminals span terminals modules	M3ST--0
SD-96632-01 express for 10 FT3 lines	M3ST100
SD-96632-01 DSX3 for 5 FT3 lines	M3ST200
SD-96632-01 express for 1 FT3 line	M3ST300
SD-96632-01 DSX3 for 1 FT3 line	M3ST400
SD-96632-01 LSTA for 1 service and 1 protection FT3 line	M3ST500
SD-73078-01: 7'0" dbl bay, w/16 T1DM's, BCPA	DDBTA
SD-73078-01: 11'6" dbl bay, w/12 T1DM's, BCPA	DDBTB
SD-73042-01: 7'0" sgl bay, T1WB4, BCPA	DDBVA
SD-73042-01: 7'0" sgl bay, T1WB4, (second bay)	DDBVB

->TABLE D (Contd)<-

TCAS CODE CATALOG

ITEM NUMBER: 319 (Contd)

FIXED FRAME TYPE	CHARACTER CODE
SD-73042-01: 11'6" sgl bay, T1WB4, BCPA, OCU's PWR	DDBVC
SD-73042-01: 11'0" sgl bay, BCPA	DDBVD
SD-73043-01: 7'0" sgl bay, T1WB5, BCPA, OCU's PWR	DDBVE
SD-73043-01: 11'0" sgl bay, T1WB5, BCPA, OCU's PWR	DDBVF
SD3C188-01: T1ASU: 1 regular line plus 1 standby line (type 1)	T1AS1
SD3C188-01: T1ASU: 1 regular line plus 1 standby line (type 2)	T1AS2

Example: DMBAA10 for a J98716C fixed frame type

ITEM NUMBER: 320

Item Name: USER FRAME TYPE

Item Name Abbreviation: USER FRM TYP

Item Description: Identifies a user's frame type.

Item Character Code:

Category: Variable

Code is: The code is user assigned, according to the Common Language Equipment Identification Standard Coding procedures per Practice 795-200-000.

Example: ABCDE15 for a user's frame type

->TABLE D (Contd)<-

TCAS CODE CATALOG

ITEM NUMBER: 402

Item Name: FUNCTION

Item Name Abbreviation: FUNC

Item Description: Identifies the function of a given E2 status or E2 switch.

Item Character Code:

Category: Fixed code

Code is: The function code appearing on ED 2C185.

Example: CGA for carrier group alarm

ITEM NUMBER: 485

Item Name: DS1 FLAG

Item Name Abbreviation: DS1 FLG

Item Description: Identifies the DS1 flag.

Item Character Code:

Category: Fixed code

Code is: Y for the alarm set to be included in T1 sectionalization
N for noninclusion of the alarm set in T1 sectionalization

Example: Y for alarm set inclusion in T1 sectionalization

->TABLE D (Contd)<-

TCAS CODE CATALOG

ITEM NUMBER: 487

Item Name: LOG ACTIVITY FLAG

Item Name Abbreviation: LOG ACTIVITY FLG

Item Description: Identifies that the log activity flag has been set.

Item Character Code:

Category: Fixed code

Code is: Y for logging activity
N for not logging activity

Example: Y for logging activity

ITEM NUMBER: 488

Item Name: AUTO TROUBLE CASE FLAG

Item Name Abbreviation: AUTO TC FLG

Item Description: Specifies whether a trouble case is to be automatically opened.

Item Character Code:

Category: Fixed code

Code is: Y for automatic trouble case opening
N for non automatic trouble case opening

Example: Y for automatic trouble case opening

->TABLE D (Contd)<-

TCAS CODE CATALOG

ITEM NUMBER: 489

Item Name: BELL FLAG

Item Name Abbreviation: BELL FLG

Item Description: Specifies whether the bell is set to on.

Item Character Code:

Category: Fixed code

Code is: Y for bell on
N for bell off

Example: Y for bell set to on

ITEM NUMBER: 501

Item Name: REMOTE ADDRESS

Item Name Abbreviation: REM ADDR

Item Description: Identifies a telemetry remote by its address.

Item Character Code:

Category: Fixed

Code is: Required code is "octal-plus-one" notation per SD1C302. The "octal-plus-one" code is the binary telemetry address expressed as a three digit octal number with each digit increased by 1. Allowable codes range from 111 to 288.

Example: 128 for a remote within address 17 octal or 0001111 binary.

->TABLE D (Contd)<-

TCAS CODE CATALOG

ITEM NUMBER: 502

Item Name: STATUS DISPLAY

Item Name Abbreviation: STAT DISPL

Item Description: Identifies display (64 bits) within a given E-Telemetry remote.

Item Character Code:

Category: Fixed

Code is: Required code is a number from 1 to 64.

Example: 14 for the 14th display in a remote.

ITEM NUMBER: 503

Item Name: STATUS WORD

Item Name Abbreviation: STAT WD

Item Description: Identifies a telemetry data word (16 bits) within a given telemetry display.

Item Character Code:

Category: Fixed

Code is: Required code is a number from 1 to 4.

Example: 3 for the 3rd word in a display.

->TABLE D (Contd)<-

TCAS CODE CATALOG

ITEM NUMBER: 504

Item Name: STATUS BIT

Item Name Abbreviation: STAT BIT

Item Description: Identifies a telemetry data bit within a given telemetry data word.

Item Character Code:

Category: Fixed

Code is: Required code is a number from 1 to 16.

Example: 15 for the 15th bit in a word.

ITEM NUMBER: 505

Item Name: SWITCH GROUP

Item Name Abbreviation: SW GR

Item Description: Identifies a telemetry switch group (256 switch points) within a given telemetry remote.

Item Character Code:

Category: Fixed

Code is: Required code is a number from 1 to 16 for 16 switch groups within a given remote.

Example: 11 for the 11th group in a remote.

->TABLE D (Contd)<-

TCAS CODE CATALOG

ITEM NUMBER: 5Ø6

Item Name: SWITCH SUBGROUP

Item Name Abbreviation: SW GRP

Item Description: Identifies a telemetry switch subgroup within a given telemetry switch group.

Item Character Code:

Category: Fixed

Code is: Required code is a number from 1 to 16 for the 16 switch subgroups within a subgroup.

Example: 12 for the 12th subgroup in a group.

ITEM NUMBER: 5Ø7

Item Name: SWITCH POINT

Item Name Abbreviation: SW PT

Item Description: Identifies a telemetry switch point within a given telemetry switch subgroup.

Item Character Code:

Category: Fixed

Code is: Required code is a number from 1 to 16 for the 16 switch points in a switch subgroup.

Example: 1Ø for the 1Øth point in a subgroup.

->TABLE D (Contd)<-

TCAS CODE CATALOG

ITEM NUMBER: 508

Item Name: E2 DISPLAY TYPE

Item Name Abbreviation: E2 DISPL TYP

Item Description: Identifies a generic grouping of table types (See Item Number 731).

Item Character Code:

Category: Fixed code

Code is: The following is the code:

E2 DISPLAY TYPE	CHAR CODE
T1 Channel Bank	T1
M12 Multiplexor	M12
M13 Multiplexor	M13
M13A Multiplexor	M13A
M34 Multiplexor	M34
T2 Terminal	T2
T4 Terminal	T4
T1 Digital Multiplex	T1DM
T1 Automatic Switch Unit	T1ASU
1A Radio Digital Terminal	1ARDT
T1WB4 Terminal	T1WB4
Maintenance Line Status Indicator	MLSI
Directed Line Monitor	DLM

Example: T1 for T1 channel bank

->TABLE D (Contd)<-

TCAS CODE CATALOG

ITEM NUMBER: 509

Item Name: REMOTE IDENTIFICATION

Item Name Abbreviation: REM ID

Item Description: Uniquely identifies a telemetry remote.

Item Character Code:

Category: Variable

Code is: Recommended code is CLLI code per Practice 795-100-100.

Example: ABCDCA01E01 identifies remote 1 within the ABCDCA01 building.

ITEM NUMBER: 510

Item Name: TELEMETRY COMPUTER TRANSLATOR NUMBER

Item Name Abbreviation: TCT NO

Item Description: Identifies a TCT used to interface between the TCAS central and telemetry networks.

Item Character Code:

Category: Fixed

Code is: Required code is 1 through 10 for TCT 1 through 10, respectively.

Example: 1 for the 1st TCT.

->TABLE D (Contd)<-

TCAS CODE CATALOG

ITEM NUMBER: 511

Item Name: DATA RATE

Item Name Abbreviation: DATA RATE

Item Description: Identifies the data baud rate (bits/sec) used on a given telemetry network.

Item Character Code:

Category: Fixed

Code is: The required code is:

600 for a data rate of 600 bps (bits-per-second).(This is required for E2 and mixed E2-E2A networks.)
1200 for a data rate of 1200 bps. (Recommended for E2A networks)

Example: 600 for 600 BPS

ITEM NUMBER: 512

Item Name: REMOTE TYPE

Item Name Abbreviation: REM TYPE

Item Description: Identifies the type of telemetry remote equipment.

Item Character Code:

Category: Fixed

Code is: Required code is:

E2 for E2A APR remote
E2A for E2A APR remote
SDP for E2A APR remote with serial data ports

Example: E2 for an E2A APR remote

->TABLE D (Contd)<-

TCAS CODE CATALOG

ITEM NUMBER: 513

Item Name: ALARM POLLING FLAG

Item Name Abbreviation: ALM PLG FLG

Item Description: Indicates whether alarm polling is permitted for a given remote.

Item Character Code:

Category: Fixed code

Code is: Y for permitted and N for not permitted

Example: Y for permitted

ITEM NUMBER: 514

Item Name: STATUS DISPLAY POLLING FLAG

Item Name Abbreviation: STAT DISPL PLG FLG

Item Description: Indicates whether status display polling is permitted for a given remote.

Item Character Code:

Category: Fixed code

Code is: Y for permitted and N for not permitted

Example: Y for permitted

->TABLE D (Contd)<-

TCAS CODE CATALOG

ITEM NUMBER: 515

Item Name: STATUS GROUP POLLING FLAG

Item Name Abbreviation: STAT GR PLG FLG

Item Description: Indicates whether status group polling is permitted for a given remote.

Item Character Code:

Category: Fixed code

Code is: Y for permitted and N for not permitted

Example: Y for permitted

ITEM NUMBER: 516

Item Name: E-TELEMETRY ODD DATA WORD

Item Name Abbreviation: E ODD DA WD

Item Description: Identifies an odd numbered E2 data word (16 bits) within a given E2 display.

Item Character Code:

Category: Fixed code

Code is: 1 or 3

Example: 3 for 3rd word in a display

->TABLE D (Contd)<-

TCAS CODE CATALOG

ITEM NUMBER: 517

Item Name: REMOTE OUT OF SERVICE FLAG

Item Name Abbreviation: REM OOS FLG

Item Description: Indicates that a remote is not being polled.

Item Character Code:

Category: Fixed code

Code is: Y for being polled and N for not being polled

Example: Y for being polled

ITEM NUMBER: 518

Item Name: SWITCH SUBGROUP TYPE

Item Name Abbreviation: SW SGRP TYPE

Item Description: Specifies the type of telemetry remote switch operation allowed within a switch subgroup.

Item Character Code:

Category: Fixed

Code is: RAU for repeater access unit
ACO for alarm cutoff

Example: RAU for repeater access unit.

->TABLE D (Contd)<-

TCAS CODE CATALOG

ITEM NUMBER: 519

Item Name: REPEATER ACCESS UNIT SHELF

Item Name Abbreviation: RAU SHLF

Item Description: Designates a logical shelf (the portion of the RAU associated with a particular repeater shelf) within a RAU.

Item Character Code:

Category: Fixed

Code is: Required codes are 1 to 8 for shelves 1 to 8.

Example: 3 for shelf 3.

ITEM NUMBER: 520

Item Name: TCAS DATA PORT NUMBER

Item Name Abbreviation: TCAS DA PORT NO

Item Description: Identifies a data port at the TCAS central used to communicate with other operation support systems.

Item Character Code:

Category: Fixed

Code is: Required code is 1 through 12 for data ports 1 through 12, respectively.

Example: 1 for data port 1.

->TABLE D (Contd)<-

TCAS CODE CATALOG

ITEM NUMBER: 521

Item Name: TCAS DATA PORT TYPE

Item Name Abbreviation: TCAS DA PORT TYPE

Item Description: Identifies the type of operation support system a particular TCAS data port is used to communicate with.

Item Character Code:

Category: Fixed

Code is: CMS for a CMS (Circuit Maintenance System)
SCCS for a SCCS

Example: CMS for a CMS data port type.

ITEM NUMBER: 522

Item Name: REMOTE DATA PORT NUMBER

Item Name Abbreviation: REM DA PORT NO

Item Description: Identifies a particular SDP (serial data port) on a E2A telemetry remote with SDP capability.

Item Character Code:

Category: Fixed

Code is: Required codes are 1 to 3 for ports 1 to 3.

Example: 1 for port 1.

->TABLE D (Contd)<-

TCAS CODE CATALOG

ITEM NUMBER: 523

Item Name: SCAN POINT

Item Name Abbreviation: SNPT

Item Description: Identifies an ESS switch master scanner scan point used to monitor T-carrier alarms in an ESS switch office.

Item Character Code:

Category: Fixed

Code is: Required code is a number from Ø to 1Ø23

Example: 11Ø for an ESS switch master scanner scan point.

ITEM NUMBER: 525

Item Name: TASC STATION NUMBER

Item Name Abbreviation: TASC STA NO

Item Description: Identifies a TASC station number.

Item Character Code:

Category: Fixed

Code is: An integer in the range of 1 to 256

Example: 1Ø

->TABLE D (Contd)<-

TCAS CODE CATALOG

ITEM NUMBER: 528

Item Name: ALARM NUMBER

Item Name Abbreviation: ALM NO

Item Description: Identifies a specific alarm number.

Item Character Code:

Category: Fixed

Code is: A decimal integer in the range of 1 to 999

Example: 154

ITEM NUMBER: 601

Item Name: DATE

Item Name Abbreviation: DATE

Item Description: Uniquely identifies a given day.

Item Character Code:

Category: Fixed

Code is: Required code is the common language date-numeric per Practice 795-100-130. The form with hyphens as separators must be used.

Example: 08-20-83 for August 20, 1983.

->TABLE D (Contd)<-

TCAS CODE CATALOG

ITEM NUMBER: 602

Item Name: TIME

Item Name Abbreviation: TM

Item Description: Identifies time of day in hours, minutes, and seconds to nearest six seconds.

Item Character Code:

Category: Fixed code

Code is: The Common Language Time of Day-Second Code per Practice 751-100-125. For input to the computer, the form without separation between elements shall be used (6 characters). For output from the computer, the form with colons as separators shall be used (8 characters).

Example 1: Input 142006 for 6 seconds after 2:20 PM

Example 2: Output 14:20:06 for 6 seconds after 2:20 PM

ITEM NUMBER: 603

Item Name: MONTHS

Item Name Abbreviation: MO

Item Description: Specifies an interval of time in whole months.

Item Character Code:

Category: Fixed code

Code is: A decimal number from 00 to 99. On output from the computer, a leading zero in the tens digit will be replaced with a blank.

Example : 03 for a 3 month period

->TABLE D (Contd)<-

TCAS CODE CATALOG

ITEM NUMBER: 604

Item Name: DAYS

Item Name Abbreviation: DY

Item Description: Specifies an interval of time in whole days.

Item Character Code:

Category: Fixed code

Code is: A decimal number from 000 to 999. On output from the computer, a leading zeros will be replaced with blanks except in the units digit.

Example : 002 for a 2 day period

ITEM NUMBER: 605

Item Name: MINUTES

Item Name Abbreviation: MIN

Item Description: Specifies an interval of time in minutes to tenths of minutes.

Item Character Code:

Category: Fixed code

Code is: A decimal number from 0000.0 to 1439.9. On output from the computer, leading zeros will be replaced with blanks except in the tenths digit.

Example : 0025.0 for a 25 minute period

->TABLE D (Contd)<-

TCAS CODE CATALOG

ITEM NUMBER: 606

Item Name: YEAR

Item Name Abbreviation: YR

Item Description: Identifies a year of a century.

Item Character Code:

Category: Fixed code

Code is: Common Language Year Code per Practice 751-100-130.

Example : 83 for the year 1983.

ITEM NUMBER: 607

Item Name: NUMERIC MONTH OF YEAR

Item Name Abbreviation: NUM MO OF YR

Item Description: Identifies a month of a given year.

Item Character Code:

Category: Fixed code

Code is: Common Language Month - Numeric Code per Practice 751-100-130. Code is a decimal number from 01 to 12.

Example : 01 for the month of January

->TABLE D (Contd)<-

TCAS CODE CATALOG

ITEM NUMBER: 608

Item Name: MNEMONIC MONTH OF YEAR

Item Name Abbreviation: MNEMONIC MO OF YR

Item Description: Identifies a month of the year by a three-character mnemonic.

Item Character Code:

Category: Fixed code

Code is: Common Language Month -Mnemonic Code per Practice 751-100-130.

Example : JAN for the month of January

ITEM NUMBER: 609

Item Name: DAY OF THE MONTH

Item Name Abbreviation: DY OF MO

Item Description: Identifies a day of a given month.

Item Character Code:

Category: Fixed code

Code is: Common Language Day of Month Code per Practice 751-100-130. Code is a decimal number 01 to 31. (The optional code 00 referred to in Practice 751-100-150 is not used).

Example : 03 for the 3rd day of the month

->TABLE D (Contd)<-

TCAS CODE CATALOG

ITEM NUMBER: 610

Item Name: DAY OF THE WEEK

Item Name Abbreviation: DY OF WK

Item Description: Identifies a day of the week.

Item Character Code:

Category: Fixed code

Code is: Common Language Day of Week Code per Practice 751-100-130.

Example : MON for Monday

ITEM NUMBER: 611

Item Name: HOUR OF THE DAY

Item Name Abbreviation: HR OF DY

Item Description: Identifies a hour of a given day.

Item Character Code:

Category: Fixed code

Code is: Common Language Hour of Day Code per Practice 751-100-125. Code is a decimal number from 00 to 23.

Example : 14 for 2 PM

->TABLE D (Contd)<-

TCAS CODE CATALOG

ITEM NUMBER: 612

Item Name: MINUTE OF THE HOUR

Item Name Abbreviation: MIN OF HR

Item Description: Identifies a minute of a given hour.

Item Character Code:

Category: Fixed code

Code is: Common Language Minute of Hour Code per Practice 751-100-125. Code is a decimal number from 00 to 59.

Example : 08 for the 8th minute of the hour

ITEM NUMBER: 613

Item Name: SECOND OF THE MINUTE

Item Name Abbreviation: SEC OF MIN

Item Description: Identifies a second of a given minute.

Item Character Code:

Category: Fixed code

Code is: Common Language Second of Minute Code per Practice 751-100-125. Code is a decimal number from 00 to 59.

Example : 06 for the 6th second of the minute

->TABLE D (Contd)<-

TCAS CODE CATALOG

ITEM NUMBER: 614

Item Name: HOUR

Item Name Abbreviation: HR

Item Description: Identifies an interval of time in whole hours.

Item Character Code:

Category: Fixed code

Code is: A decimal number from ØØØ to 999. On output from the computer, leading zeros will be replaced except in the units digit.

Example : ØØ2 for a 2 hour period

ITEM NUMBER: 619

Item Name: HOLDING TIME-MINUTES

Item Name Abbreviation: HOLDING MINS

Item Description: Specifies the amount of holding time.

Item Character Code:

Category: Fixed code

Code is: A decimal number of the form NN.N in the range Ø.Ø-99.9

Example : 15.Ø

->TABLE D (Contd)<-

TCAS CODE CATALOG

ITEM NUMBER: 701

Item Name: DIGITAL SIGNAL LEVEL

Item Name Abbreviation: DIG SIG LEV

Item Description: Identifies the digital signal level of a system within the digital hierarchy of T-Carrier Systems.

Item Character Code:

Category: Fixed

Code is: DS1 for T1
DS1C for T1C
DS2 for T2
DS3 for T3
DS4 for T4

Example: DS1 for T1 level.

ITEM NUMBER: 702

Item Name: PATCH LINE CLASS

Item Name Abbreviation: PTCH LN CL

Item Description: Identifies the type of patch line used for a restoration or span patch.

Item Character Code:

Category: Fixed

Code is: Required code is the common language restoration line classification per Practice 751-100-330. Allowable codes are:
W for a working line
B for a backbone
M for a maintenance line
P for a protection line
L for a looped line

Example: B for a backbone line.

->TABLE D (Contd)<-

TCAS CODE CATALOG

ITEM NUMBER: 703

Item Name: END

Item Name Abbreviation: END

Item Description: Identifies one of the two ends of a system or span line.

Item Character Code:

Category: Fixed

Code is: Required code for a system shall be A for the first location to appear in the system identification and Z for the other end. The code for a span line shall be A for the first end of that span line that appears on the SLR and Z for the other end.

Example: A for the first end in the identification of a system.

ITEM NUMBER: 704

Item Name: DIRECTION

Item Name Abbreviation: DIRN

Item Description: Identifies the AZ or ZA direction of transmission for a system or span line. The BW code is used in conjunction with a DF (derived facility) span on a high-capacity digital system.

Item Character Code:
Category: Fixed

Code is: Required code is common language direction-transmission code per Practice 795-100-340.
AZ for transmission from End A to End Z
ZA for transmission from End Z to End A
BW for transmission in both directions

Example: AZ for transmission from A to Z.

->TABLE D (Contd)<-

TCAS CODE CATALOG

ITEM NUMBER: 705

Item Name: CIRCUIT ORDER NUMBER

Item Name Abbreviation: CKT ORD NO

Item Description: Identifies a circuit order number on a SLR (system layout record).

Item Character Code:

Category: Variable

Code is: No recommended code (even though this a variable coded item, it cannot have aliases).

Example:

ITEM NUMBER: 706

Item Name: MILES

Item Name Abbreviation: MI

Item Description: Indicates a distance in miles.

Item Character Code:

Category: Fixed

Code is: Required code is a decimal number from 0.0 to 999.9.

Example: 055.9 for 55 and 9/10 miles.

->TABLE D (Contd)<-

TCAS CODE CATALOG

ITEM NUMBER: 707

Item Name: ISSUE NUMBER

Item Name Abbreviation: ISS NO

Item Description: Identifies ths issue of a SLR.

Item Character Code:

Category: Fixed

Code is: Required code is a number from 1 to 99.

Example: 03 for the 3rd issue.

ITEM NUMBER: 708

Item Name: INITIALS

Item Name Abbreviation: INTLS

Item Description: Identifies a person by initials.

Item Character Code:

Category: Variable

Code is: Code shall consist of the alphabetic characters only.

Example: JDS for John D. Smith.

->TABLE D (Contd)<-

TCAS CODE CATALOG

ITEM NUMBER: 709

Item Name: SYSTEM LAYOUT RECORD REFERENCE NUMBER

Item Name Abbreviation: SLR REF NO

Item Description: Identifies the reference number of a system layout record.

Item Character Code:

Category: Fixed code

Code is: A decimal number from 0001 to 9999.

Example : 0515 for reference number 515

ITEM NUMBER: 710

Item Name: SYSTEM PRIORITY

Item Name Abbreviation: SYS PRIORITY

Item Description: Indicates the priority to be assigned to trouble cases opened on a given system.

Item Character Code:

Category: Fixed code

Code is: A decimal number from 01 to 99. See Item Number 717 for the use of SYSTEM PRIORITY in defining TROUBLE CASE PRIORITY.

Example : 40 for 40th highest priority

->TABLE D (Contd)<-

TCAS CODE CATALOG

ITEM NUMBER: 711

Item Name: CARRIER GROUP ALARM FREQUENCY

Item Name Abbreviation: CGA FREQ

Item Description: Measure of CGA frequency determined by counting CGA hits weighted by exponentials decaying in a time T.

Item Character Code:

Category: Fixed code

Code is: A decimal number in the range ØØØ.ØØ to 326.ØØ or the characters $$$$$$. On output of the numeric from the computer, leading zeros will be replaced with blanks except in the tenths and hundredths digit. The $$$$$$ code will be used only on output of a number greater than 326.ØØ.

Example : ØØ2.Ø1 for 2 and 1 hundredth

ITEM NUMBER: 712

Item Name: SPAN LINE CLASS

Item Name Abbreviation: SPN LN CL

Item Description: Indicates whether a T1 signal utilizes a facilty derived from a higher level carrier.

Item Character Code:

Category: Fixed code

Code is: Y for utilizes higher level and N for does not utilize higher level

Example : Y for utilizes higher level

->TABLE D (Contd)<-

TCAS CODE CATALOG

ITEM NUMBER: 713

Item Name: SPAN DESIGNATION

Item Name Abbreviation: SPN DESIG

Item Description: Identifies a T-carrier span between a pair of adjacent offices. A span is defined in TCAS as a collection of 25 associated bi-directional span lines. The span lines are associated in that they utilize side 1 and 2 of the same apparatus case repeaters for single cable operation and utilize side 1 (or 2) of two different apparatus case repeater strings for two cable operations.

Item Character Code:
Category: Variable

Code is: No recommended code.

Example: 101A identifies a span 101, case A.

ITEM NUMBER: 714

Item Name: PATTERN GROUP NUMBER

Item Name Abbreviation: PATT GR NO

Item Description: Indicates a group of entities, such as cables that have been patterned to have failed as part of the same event.

Item Character Code:
Category: Fixed code
Code is: Three digits, a character G and three digits, where the six digits together form a self-checking number of weight W=0

Example : 100G108 for the 5th pattern group number

Note: Review the paragraphs dealing with entity identification codes.

->TABLE D (Contd)<-

TCAS CODE CATALOG

ITEM NUMBER: 715

Item Name: TROUBLE CASE TYPE

Item Name Abbreviation: TBL CSE TYP

Item Description: Indicates the type of a trouble case.

Item Character Code:

Category: Fixed code

Code is: (Definition pending)

Note: Review the paragraphs dealing with entity identification codes.

ITEM NUMBER: 716

Item Name: TROUBLE CASE NUMBER

Item Name Abbreviation: TBL CSE NO

Item Description: Identifies a case of trouble on an entity such as T1 system, cable, etc.

Item Character Code:

Category: Fixed code

Code is: Three digits, a character X and three digits, where the six digits together form a self-checking number of weight W=1

Example : 100X107 for the 5th trouble case number

Note: Review the paragraphs dealing with entity identification codes.

->TABLE D (Contd)<-

TCAS CODE CATALOG

ITEM NUMBER: 717

Item Name: SYSTEM PRIORITY

Item Name Abbreviation: SYS PRIORITY

Item Description: Identifies a relative priority that can be applied to a T-Carrier System so that systems with a high priority can have their trouble case brought to a Maintenance Controllers attention in a priority manner.

Item Character Code:
Category: Fixed
Code is: Required code is a decimal number 1 to 99 with 1 being the highest priority. It is recommended that only codes in the range of 19 to 39 be used for proper administration. A standard system has a default priority of 40 while a cable failure has a priority of 18.

Example: 05 for a trouble case 4 levels from the most urgent.

DEFAULT TROUBLE CASE PRIORITIES

PRIORITY	TROUBLE CASE TYPE
1	HIGHEST
4	T4 SYSTEM & COMPONENTS - SERVICE AFFECTING ALARM
8	T2 SYSTEM & COMPONENTS - SERVICE AFFECTING ALARM
12	T4 SYSTEM & COMPONENTS - NOT SERVICE AFF ECTING
16	T2 SYSTEM & COMPONENTS - NOT SERVICE AFFECTING
18	T1 CABLE PATTERN
24	T1 ORB SHELF PATTERN
26	T1 TERMINAL BAY PATTERN
28	T1 TSPS LINE (DLM)
30	T1 DDS EQUIPMENT/LINE ALARM
34	T1 SYSTEM (CGA): "B" THRESHOLD SET (MORE SENSITIVE)
38	T1 SIDE SYSTEM PATTERN
40	T1 SYSTEM (CGA): "A" THRESHOLD SET (LESS SENSITIVE)
44	T1 PATCH LINE (MLSI): SEIZED
46	T1 PATCH LINE (MLSI): FAILURE - "B" THRESHOLD SET
48	T1 PATCH LINE (MLSI): FAILURE - "A" THRESHOLD SET
50	T1 SYSTEM LINE (DLM): "B" THRESHOLD
52	T1 SYSTEM LINE (DLM): "A" THRESHOLD
99	LOWEST

->TABLE D (Contd)<-

TCAS CODE CATALOG

ITEM NUMBER: 718

Item Name: RANK IN TROUBLE CASE

Item Name Abbreviation: RK IN TBL CSE

Item Description: Indicates the relative posiitoning of an entity, such as a cable, in a pattern trouble case.

Item Character Code:

Category: Fixed code

Code is: A decimal number between Ø1 and 99 with Ø1 being the entity most likely to contain the trouble.

Example : Ø2

ITEM NUMBER: 719

Item Name: ACTION CODE

Item Name Abbreviation: ACTN CD

Item Description: Identifies an action taken on a trouble case.

Item Character Code:
Category: Fixed code
Code is: Miscellaneous deferral
Referred
System sectionalization in progress
Serving test center notified
Line maintenance tests in progress
Office repair in progress
Line sectionalization in progress
Span fault location in progress
Outside plant dispatch notified
Outside plant repair in progress
Repair complete
Network control center notified
Restoration patch in progress
Pending cases assoc. trouble case clearing

->TABLE D (Contd)<-

TCAS CODE CATALOG

ITEM NUMBER: 720

Item Name: COMMENT NUMBER

Item Name Abbreviation: CMT NO

Item Description: Uniquely identifies a comment.

Item Character Code:

Category: Fixed code

Code is: Three digits, a character C and three digits, where the six digits together form a self-checking number of weight W=2.

Example: SFL for span fault location

Note: Refer to the rules for forming self-checking numbers in this section.

ITEM NUMBER: 721

Item Name: NOTICE NUMBER

Item Name Abbreviation: NTC NO

Item Description: Uniquely identifies a notice.

Item Character Code:
Category: Fixed code

Code is: Three digits, a character N and three digits, where the six digits together form a self-checking number of weight W=3.

Example: 100N105 for the 5th notice number

Note: Refer to the rules for forming self-checking numbers in this section.

->TABLE D (Contd)<-

TCAS CODE CATALOG

ITEM NUMBER: 722

Item Name: OUTSIDE PLANT FLAG

Item Name Abbreviation: OP FLG

Item Description: Indicates whether a trouble has been located to be in the outside plant.

Item Character Code:

Category: Fixed code

Code is: Y for trouble in outside plant and N for trouble not in outside plant

Example: Y for trouble in outside plant

->TABLE D (Contd)<-

TCAS CODE CATALOG

ITEM NUMBER: 723

Item Name: TCAS TROUBLE TYPE

Item Name Abbreviation: TCAS TBL TYP

Item Description: Indicates a type of trouble or no trouble found by a TCAS defined code.

Item Character Code:
Category: Fixed code
Code is: The following is the TCAS standard trouble types:

TCAS STANDARD TROUBLE TYPE	CHAR. CODE
Terminal (Channel Bank)	COTERM
Terminal Power Supply/Fuse	COPWRS
Office Repeater/Fuse	CORPTR
Office Battery	COBAT
Office Wiring/Frame	COWRG
Office, Other Equipment	COEQPT
Office, Span Powering/Fuse	COLNFS
Office, Came Clear	COCC
Office, Work Error	COERR
Office, Miscellaneous	COMISC
Office, Maintenance/Rearrangements	COMTCE
Office, (Reserved for special or future type)	COSPL
Span Line Cable/Splice	LNCA
Span Line Repeater	LNRPTR
Span Line Apparatus Case (Non-Repeater)	LNAC
Span Line, Came Clear	LNCC
Span Line, Work Error	LNERR
Span Line, Miscellaneous	LNMISC
Span Line, Maintenance/Rearrangements	LNMTCE
Span Line, (Reserved for special or future type)	LNSPL
Line, Came Clear	LINECC
System, Miscellaneous	MISC
System, (Reserved for special or future type)	SYSSPL
No Trouble Found	NTF
Other Than T1 System	OTHER
Trouble Found	TBL

Example: LNRPTR for span line repeater

->TABLE D (Contd)<-

TCAS CODE CATALOG

ITEM NUMBER: 724

Item Name: TELCO TROUBLE TYPE

Item Name Abbreviation: TELCO TBL TYP

Item Description: Indicates a type of trouble or no trouble found by a user defined code.

Item Character Code:
Category: Fixed code
Code is: Currently the same as the following TCAS standard trouble types:

TCAS STANDARD TROUBLE TYPE	CHAR. CODE
Terminal (Channel Bank)	COTERM
Terminal Power Supply/Fuse	COPWRS
Office Repeater/Fuse	CORPTR
Office Battery	COBAT
Office Wiring/Frame	COWRG
Office, Other Equipment	COEQPT
Office, Span Powering/Fuse	COLNFS
Office, Came Clear	COCC
Office, Work Error	COERR
Office, Miscellaneous	COMISC
Office, Maintenance/Rearrangements	COMTCE
Office, (Reserved for special or future type)	COSPL
Span Line Cable/Splice	LNCA
Span Line Repeater	LNRPTR
Span Line Apparatus Case (Non-Repeater)	LNAC
Span Line, Came Clear	LNCC
Span Line, Work Error	LNERR
Span Line, Miscellaneous	LNMISC
Span Line, Maintenance/Rearrangements	LNMTCE
Span Line, (Reserved for special or future type)	LNSPL
Line, Came Clear	LINECC
System, Miscellaneous	MISC
System, (Reserved for special or future type)	SYSSPL
No Trouble Found	NTF
Other Than T1 System	OTHER
Trouble Found	TBL

Example: LNPTR for span line repeater

->TABLE D (Contd)<-

TCAS CODE CATALOG

ITEM NUMBER: 727

Item Name: LEAST LOAD INHIBITIED FLAG

Item Name Abbreviation: LEAST LD INHD FLG

Item Description: Indicates whether a given CDT is to be inhibited from receiving trouble cases through the least load algorithm.

Item Character Code:

Category: Fixed code

Code is: Y for inhibited
N for not inhibited

Example: Y for inhibited

ITEM NUMBER: 728

Item Name: COMMUNICATIONS DISPLAY TERMINAL NUMBER

Item Name Abbreviation: CDT NO

Item Description: Uniquely identifies a TCAS CDT position.

Item Character Code:

Category: Fixed

Code is: A number from 1 to 12, plus TCAS identification if the TCAS data link feature is provided.

Example: 8 (indicates CDT number 8)

->TABLE D (Contd)<-

TCAS CODE CATALOG

ITEM NUMBER: 729

Item Name: EQUIPMENT CLASS

Item Name Abbreviation: EQPT CL

Item Description: Identifies a class of T-Carrier equipment.

Item Character Code:

Category: Fixed code

Code is: The following are the equipment classes:

T1TERM	=	T1 Terminal
T1OR	=	T1 Office Repeater
T1PLR	=	T1 Patch Line Repeater
T1RSHLF	=	T1 Repeater Shelf

Example: T1TERM for T1 terminal

ITEM NUMBER: 730

Item Name: OFFICE RECORD DRAWING NUMBER

Item Name Abbreviation: OFF RCD DWG NO

Item Description: (Not currently in use)

Item Character Code:

Category: Variable code

Code is: No recommended code

->TABLE D (Contd)<-

TCAS CODE CATALOG

ITEM NUMBER: 731

Item Name: STATUS DISPLAY TYPE

Item Name Abbreviation: STAT DISPL TYPE

Item Description: Identifies the type of monitored equipment assigned to specific telemetry displays as specified on AT&T Technology drawings ED-2C185, ED-2C217-1Ø, ED-2C217-11, ED-1P515-1Ø, and ED-1P516-1Ø. This item is identified as TABLE TYPE on the drawings.

Item Character Code:

Category: Fixed

Code is: DAA through DCH for E2 and E2A telemetry (ED-2C185)
EAM for E2 telemetry (ED-2C217-1Ø)
EAA for E2A telemetry (ED-2C217-11)
CGA and M1C for E2A telemetry (ED-1P516-1Ø)
SFA and MLS for E2A telemetry (ED=1P515-1Ø)

Note 1: Early TCAS installations utilized the codes DAA through DCH for CGAs for various types of channel bank equipment arrangments, DBY for repeater bay fuse indications, and EAM and EBG for MLSI indications. EAM is applicable to the original MLSI CP1 which is status polled by the TCAS central. This version is rated A&M only. EBG is for alarm polled versions of MLSIs, namely CP3, CP4, and CP5.

Note 2: All new TCAS installations are engineered from application schematics SD-96607-03 and SD-1P090-01 and use the STATUS DISPLAY TYPE codes CGA, M1C, SFA, AND MLS for channel bank CGAs, M1C muldems alarms, shelf fuse alarms, and MLSI alarms, respectively.

Example: DAA for a E2 telemetry status display type.

->TABLE D (Contd)<-

TCAS CODE CATALOG

ITEM NUMBER: 732

Item Name: TABLE NUMBER

Item Name Abbreviation: TABLE NO

Item Description: Identifies a table on a given central office record.

Item Character Code:

Category: Variable code

Code is: No recommended code

Example: A for Table A

ITEM NUMBER: 733

Item Name: LINE NUMBER

Item Name Abbreviation: LN NO

Item Description: Identifies a line on a form.

Item Character Code:

Category: Fixed code

Code is: A decimal number from Ø1 to 99.

Example: 35 for 35th line

->TABLE D (Contd)<-

TCAS CODE CATALOG

ITEM NUMBER: 734

Item Name: DATA BASE ACTION CODE

Item Name Abbreviation: DA BS ACTN CD

Item Description: Specifies action to be taken on a data base record for entry via magnetic tape.

Item Character Code:

Category: Fixed

Code is: A for add
C for change
D for delete

Example: A for add

ITEM NUMBER: 735

Item Name: RECORD TYPE

Item Name Abbreviation: RCD TYP

Item Description: Specifies type of data base input record.

Item Character Code:

Category: Fixed code

Code is: A decimal number from Ø1 to 99.

Example: 5Ø for System Layout Record

->TABLE D (Contd)<-

TCAS CODE CATALOG

ITEM NUMBER: 736

Item Name: ITEM NUMBER

Item Name Abbreviation: ITEM NO

Item Description: Identifies an item in the TCAS Code Catalog by number.

Item Character Code:

Category: Fixed code

Code is: A decimal number from 1Ø1 to 999 as assigned in the TCAS Code Catalog.

Example: 1Ø1 for Office Identification

ITEM NUMBER: 737

Item Name: ITEM NAME ABBREVIATION

Item Name Abbreviation: ITEM NM ABBR

Item Description: Identifies an item in the TCAS Code Catalog by the item name abbreviation.

Item Character Code:

Category: Fixed code

Code is: The item name abbreviation given in the TCAS Code Catalog

Example: OFF ID for Office Identification

->TABLE D (Contd)<-

TCAS CODE CATALOG

ITEM NUMBER: 738

Item Name: VARIABLE CODE

Item Name Abbreviation: VRBL CD

Item Description: A character string used as a code for a variable code item.

Item Character Code:

Category: Fixed code

Code is: The individual items for recommended codes.

Example: ABCDCAØ3TØØ for ABCD 3 Testboard

ITEM NUMBER: 739

Item Name: CHARACTER FORMAT

Item Name Abbreviation: CHAR FMT

Item Description: Indicates the type for character that may appear in a character position of a character code.

Item Character Code:

Category: Fixed code

Code is: A for alphabetic character
N for numeric character
S for special character (symbol or space)
X for A, N, or S

Example: A for alphabetic character

->TABLE D (Contd)<-

TCAS CODE CATALOG

ITEM NUMBER: 740

Item Name: REPORT NUMBER

Item Name Abbreviation: RPT NO

Item Description: Identifies a scheduled report.

Item Character Code:

Category: Fixed code

Code is: 1 = Daily report of failed T1 systems
2 = Weekly report of failed T1 systems
3 = Back-up report
4 = Backbone usage
5 = Maintenance type statistics by office
6 = Trouble type statistics by office

Example: 2 for weekly report of failed T1 systems

ITEM NUMBER: 741

Item Name: COUNTER

Item Name Abbreviation: CTR

Item Description: Counter for accumulation.

Item Character Code:

Category: Fixed code

Code is: A decimal number from 00000 to 32767. On output from the computer, leading zeros will be replaced with blanks except in the units digit.

Example: 00012

->TABLE D (Contd)<-

TCAS CODE CATALOG

ITEM NUMBER: 742

Item Name: FAILURE RATE

Item Name Abbreviation: FAIL RATE

Item Description: Specific rate of failure for given conditions.

Item Character Code:

Category: Fixed code

Code is: A decimal number from ØØ.ØØØ to 32.767. On output from the computer, a leading zero in the tens digit will be replaced by a blank.

Example: ØØ.Ø3Ø

ITEM NUMBER: 743

Item Name: SYSTEM REFERENCE NUMBER

Item Name Abbreviation: SYS REF NO

Item Description: Identifies a carrier system by a short code.

Item Character Code:

Category: Fixed code

Code is: Three digits, a character S and three digits, where the six digits together form a self-checking number of weight W=4.

Example: 1ØØS1Ø4 for system 1Ø1 T1-ABCDCAØFØ1 WXYZCAØ3FØ1

Note: Refer to the rules for self-checking numbers in this section.

->TABLE D (Contd)<-

TCAS CODE CATALOG

ITEM NUMBER: 744

Item Name: PATCH LINE REFERENCE NUMBER

Item Name Abbreviation: PTCH LN REF NO

Item Description: Identifies a patch line by a short code.

Item Character Code:

Category: Fixed code

Code is: Three digits, a character P and three digits, where the six digits together form a self-checking number of weight W=5.

Example: 1ØØP162 for 1Ø5 T1U ABCDCA11FØ1 WXYZCA11FØ1

Note: Refer to the rules for self-checking numbers in this section.

ITEM NUMBER: 745

Item Name: VERB

Item Name Abbreviation: VERB

Item Description: Indicates the action to be taken by the TCAS central in response to an interactive language input message.

Item Character Code:

Category: Fixed code

Code is: Defined in the TCAS Input Message Formats. This code set is an extension of the verbs given in PDS (program documentation standards), Message Format and Language (I/O).

Example: OP for Output

->TABLE D (Contd)<-

TCAS CODE CATALOG

ITEM NUMBER: 746

Item Name: OPTION SET NAME

Item Name Abbreviation: OPT SET NM

Item Description: Identifies a collection of optional keyword units in the TCAS interactive language.

Item Character Code:

Category: Fixed code

Code is: Defined in the TCAS Input Message Formats.

Example: TCN OR ENTITY ID for trouble case number or entity identification

ITEM NUMBER: 747

Item Name: KEYWORD

Item Name Abbreviation: KYWD

Item Description: Identifies either the object of the verb or optional information in the TCAS interactive language.

Item Character Code:

Category: Fixed code

Code is: Defined in the TCAS Input Message Formats.

Example: TC for trouble case

->TABLE D (Contd)<-

TCAS CODE CATALOG

ITEM NUMBER: 748

Item Name: THRESHOLD GROUP

Item Name Abbreviation: TH GR

Item Description: Identifies whether to apply more sensitive or less sensitive thresholds to trouble case opening on a given system.

Item Character Code:

Category: Fixed code

Code is: Ø for low sensitivity and 1 for high sensitivity.

Example: 1 for high sensitivity

ITEM NUMBER: 749

Item Name: PROGRAM NUMBER

Item Name Abbreviation: PROG NO

Item Description: Identifies one of the disc resident programs scheduled by the TCAS scheduler.

Item Character Code:

Category: Fixed code

Code is: A decimal number from Ø1 to 99.

Example: Ø3 for PRGØ3

->TABLE D (Contd)<-

TCAS CODE CATALOG

ITEM NUMBER: 750

Item Name: DIALOGUE NUMBER

Item Name Abbreviation: DIALOGUE NO

Item Description: Identifies a specific dialogue file entry for a given program.

Item Character Code:

Category: Fixed code

Code is: A decimal number from 00001 to 32767.

Example: 00021

ITEM NUMBER: 751

Item Name: RECORD NUMBER

Item Name Abbreviation: RCD NO

Item Description: Identifies a data base input record within a given physical block on a magnetic tape.

Item Character Code:

Category: Fixed code

Code is: A decimal number from 01 to 25.

Example: 04

->TABLE D (Contd)<-

TCAS CODE CATALOG

ITEM NAME: 752

Item Name: BLOCK NUMBER

Item Name Abbreviation: BLK NO

Item Designation: Identifies a physical block of 25 data base input records on a magnetic tape.

Item Character Code:

Category: Fixed code

Code is: A decimal number from 1 to 32767 equal to the number in the character code.

Example: ØØØ19

ITEM NAME: 753

Item Name: E-TELEMETRY FACILITY FAILURE TYPE

Item Name Abbreviation: E FAC FAIL TYP

Item Designation: Identifies a type of failure occuring on an E-telemetry facility.

Item Character Code:

Category: Fixed code

Code is: IRR for invalid replay rate failure

Example: IRR for invaild replay rate failure

->TABLE D (Contd)<-

TCAS CODE CATALOG

ITEM NAME: 754

Item Name: E-TELEMTRY REMOTE FAILURE TYPE

Item Name Abbreviation: E REM FAIL TYP

Item Designation: Identifies a type of failure for an E-telemetry remote.

Item Character Code:

Category: Fixed code

Code is: NR for no response and CF for command failure

Example: NR for no response

ITEM NAME: 755

Item Name: SHORT COUNTER

Item Name Abbreviation: SH CTR

Item Designation: Counter for accumulation

Item Character Code:

Category: Fixed code

Code is: A decimal number from ØØØ to 999. On output from the computer, leading zeros will be replaced with blanks except in the units digit.

Example: Ø27

->TABLE D (Contd)<-

TCAS CODE CATALOG

ITEM NAME: 756

Item Name: MAGNETIC TAPE LABEL FIELD

Item Name Abbreviation: MAGC TP LBL

Item Designation: Identifies a magentic tape label field to be changed or indicates no change or list of all fields.

Item Character Code:

Category: Fixed code

Code is:
- Ø1 to 14 = Field 1 to Field 14
- NO = No change
- LIST = List all fields

Example: Ø7 for Field 7

ITEM NAME: 757

Item Name: SYSTEM STATUS

Item Name Abbreviation: SYS STAT

Item Designation: Indicates the status of a T-Carrier System.

Item Character Code:

Category: Fixed code

Code is:
- CLEAR = Not failed and not patched
- ALARMED = Failed and not on patch
- PATCHED = Not failed and on patch
- PTCHALRM = Failed and on patch

Example: ALARMED for failed and not on patch

->TABLE D (Contd)<-

TCAS CODE CATALOG

ITEM NAME: 758

Item Name: COMPUTER STATUS

Item Name Abbreviation: CMPTR STAT

Item Designation: Indicates the status of the TCAS central computer.

Item Character Code:

Category: Fixed code

Code is: ACT = Active
OOS = Out of service

Example: ACT for active

ITEM NAME: 759

Item Name: SCHEDULE CHANGE

Item Name Abbreviation: SCHED CHG

Item Designation: Indicates the state to which a scheduled task should be changed.

Item Character Code:

Category: Fixed code

Code is: START = Start execution
INH = Inhibit execution
ALLOW = Allow execution

Example: INH for inhibit execution

->TABLE D (Contd)<-

TCAS CODE CATALOG

ITEM NAME: 760

Item Name: PARAMETER CHANGE TYPE

Item Name Abbreviation: PRMTR CHG

Item Designation: Indicates the type of parameters to be changed.

Item Character Code:

Category: Fixed code

Code is: SCHED = Scheduled task parameters
CONST = Common block constants
DATE = Date

Example: SCHED for scheduled task parameters

ITEM NAME: 761

Item Name: SCHEDULED TASK NUMBER

Item Name Abbreviation: SCHED TASK NO

Item Designation: Identifies a scheduled task for a TCAS central.

Item Character Code:

Category: Fixed code

Code is: A decimal number from 001 to 999

Example: 10

->TABLE D (Contd)<-

TCAS CODE CATALOG

ITEM NAME: 762

Item Name: PARAMETER NUMBER

Item Name Abbreviation: PRMTR NO

Item Designation: Identifies a common block constant for a TCAS control.

Item Character Code:

Category: Fixed code

Code is: A decimal number from ØØ1 to 999

Example: Ø2Ø

ITEM NAME: 763

Item Name: SCHEDULED TASK STATUS

Item Name Abbreviation: SCHED TASK

Item Designation: Indicates the status of a scheduled task for a TCAS central.

Item Character Code:

Category: Fixed code

Code is: ACT = Active
SCHED = Scheduled
INH = Inhibited
NONE = Does not apply

Example: ACT for active

->TABLE D (Contd)<-

TCAS CODE CATALOG

ITEM NUMBER: 764

Item Name: REPORT DAILY FLAG

Item Name Abbreviation: REPT DAILY FLG

Item Description: Indicates that daily reports are allowed for a particular corporate structure entity.

Item Character Code:

Category: Fixed

Code is: Y for allowed
N for not allowed

Example: Y for allowed.

ITEM NUMBER: 765

Item Name: REPORT WEEKLY FLAG

Item Name Abbreviation: REPT WKLY FLG

Item Description: Indicates that weekly reports are allowed for a particular corporate structure entity.

Item Character Code:

Category: Fixed

Code is: Y for allowed
N for not allowed

Example: Y for allowed.

->TABLE D (Contd)<-

TCAS CODE CATALOG

ITEM NUMBER: 766

Item Name: REPORT MONTHLY FLAG

Item Name Abbreviation: REPT MTHLY FLG

Item Description: Indicates that monthly reports are allowed for a particular corporate structure entity.

Item Character Code:

Category: Fixed

Code is: Y for allowed
N for not allowed

Example: Y for allowed.

ITEM NUMBER: 767

Item Name: REPORT QUARTERLY FLAG

Item Name Abbreviation: REPT QTRLY FLG

Item Description: Indicates that quarterly reports are allowed for a particular corporate structure entity.

Item Character Code:

Category: Fixed

Code is: Y for allowed
N for not allowed

Example: Y for allowed

->TABLE D (Contd)<-

TCAS CODE CATALOG

ITEM NAME: 768

Item Name: ERROR REFERENCE NUMBER

Item Name Abbreviation: ERR REF NO

Item Designation: Identifies a record or collection of records in the error file.

Item Character Code:

Category: Fixed code

Code is: Three digits, a character E and three digits, where the six digits together form a self-checking number of weight W=7

Example: 1ØØEØ8Ø

Note: Review the paragraphs dealing with the rules for self-checking numbers.

ITEM NAME: 769

Item Name: DISC PORTION

Item Name Abbreviation: DISC PRTN

Item Designation: Indicates the portion of the disc memory to be included in disc image.

Item Character Code:

Category: Fixed code

Code is: ALL = Operating system and data base
OPSYS = Operating system only

Example: ALL for operating system and data base

->TABLE D (Contd)<-

TCAS CODE CATALOG

ITEM NAME: 770

Item Name: LOOP BACK LOCATION

Item Name Abbreviation: LP BK LOCN

Item Designation: Indicates the loop back point for E-telemetry facility tests.

Item Character Code:

Category: Fixed code

Code is: LOCAL = Local data set
FAREND = Far end data set
STC = Serving Test Center

Example: LOCAL for local data set

ITEM NAME: 771

Item Name: LOOP BACK MODE

Item Name Abbreviation: LP BK MODE

Item Designation: Indicates E-telemetry facility test mode.

Item Character Code:

Category: Fixed code

Code is: ANALOG = Analog
DIGITAL = Digital

Example: DIGITAL for digital

->TABLE D (Contd)<-

TCAS CODE CATALOG

ITEM NAME: 772

Item Name: CONTROLLER TYPE

Item Name Abbreviation: CONTR TYP

Item Designation: Indicates the type of controller signing on to a CDT.

Item Character Code:

Category: Fixed code

Code is: MC = Maintenance Controller
DBC = Data Base Controller
EFAC = Equipment and Facilities Administration Controller
MAC = Maintenance Alarm Controller
SC = Supervisory Controller

Example: MC for maintenance controller

ITEM NAME: 773

Item Name: ERROR FILE FLAG

Item Name Abbreviation: ERR FILE FLG

Item Designation: Indicates the destination for data base input.

Item Character Code:

Category: Fixed code

Code is: Y = error file
N = Working file

Example: Y for error file

->TABLE D (Contd)<-

TCAS CODE CATALOG

ITEM NAME: 774

Item Name: PATCH TYPE

Item Name Abbreviation: PTCH TYP

Item Designation: Indicates the type of patch on a carrier system.

Item Character Code:

Category: Fixed code

Code is: MTCE = Maintenance patch
REST = Restoration patch

Example: REST for restoration patch

ITEM NAME: 775

Item Name: UNCONDITIONAL FLAG

Item Name Abbreviation: UCL FLG

Item Designation: Indicates whether a manual input is to be accepted without verification by telemetry.

Item Character Code:

Category: Fixed code

Code is: Y = Unconditional on verification
N = Conditional on verification

Example: Y for unconditional on verification

->TABLE D (Contd)<-

TCAS CODE CATALOG

ITEM NAME: 776

Item Name: SYSTEM THRESHOLD TIME INTERVAL

Item Name Abbreviation: SYS TH TM INT

Item Designation: Indicates a time interval in minutes used to set common block constants.

Item Character Code:

Category: Fixed code

Code is: A decimal number in the range ØØØ1.Ø to 1439.9. On output from the computer, leading zeros will be replaced with blanks except in the tenths digit.

Example: ØØ25.Ø for a 25 minute interval

ITEM NAME: 777

Item Name: MONITOR DISPLAY UPDATE INTERVAL

Item Name Abbreviation: MON DISPL UPD INT

Item Designation: Indicates the length in minutes of the interval between updates of the MON:TC and MON:ST displays on the CDTs.

Item Character Code:

Category: Fixed code

Code is: A decimal number in the range Ø.2 to 2.Ø. On output from the computer, a zero in the units digit will be replaced with a blank.

Example: Ø.2 for a 12 seond update interval

->TABLE D (Contd)<-

TCAS CODE CATALOG

ITEM NAME: 778

Item Name: FRACTION OF SYSTEMS

Item Name Abbreviation: FRAC OF SYS

Item Designation: Indicates a fraction of all the systems monitored by a TCAS central.

Item Character Code:

Category: Fixed code

Code is: A decimal number in the range Ø.ØØØØ to Ø.9999

Example: Ø.3ØØØ

ITEM NAME: 779

Item Name: PARAMETER LABEL FIELD

Item Name Abbreviation: PRMTR LBL FLD

Item Designation: Identifies a common block constant field to be changed or indicates a list of all constants.

Item Character Code:

Category: Fixed code

Code is: ØØ1 to 199 = 1st constant to 199 constant
LIST = List of all constants

Example: ØØ3 for field 3

->TABLE D (Contd)<-

TCAS CODE CATALOG

ITEM NAME: 780

Item Name: PATCH LINE STATUS

Item Name Abbreviation: PTCH LN STAT

Item Designation: Indicates the status of a carrier patch line.

Item Character Code:

Category: Fixed code

Code is: CLEAR = No spans reserved or alarmed
INUSE = At least one span reserved and no spans alarmed
FAILED = At least one span alarmed

Example: CLEAR for no spans reserved or alarmed

ITEM NAME: 781

Item Name: POSITIVE COUNTER

Item Name Abbreviation: POS CTR

Item Designation: Nonzero counter for accumulation

Item Character Code:

Category: Fixed code

Code is: A decimal number from 00001 to 32767. On output from the computer, leading zeros will be replaced with blanks except in the units digit.

Example: 00001

->TABLE D (Contd)<-

TCAS CODE CATALOG

ITEM NAME: 782

Item Name: DLM EVENT

Item Name Abbreviation: DLM EVT

Item Designation: Indicates the number of bipolar violations and pulse absences for a given DLM measurement.

Item Character Code:

Category: Fixed code

Code is: A decimal number from 00001 to 32767. On output from the computer, leading zeros will be replaced with blanks except in the units digit.

Example: 00001

ITEM NUMBER: 788

Item Name: PRIMARY SWITCHING MACHINE FLAG

Item Name Abbreviation: PRIM SW MACH FLG

Item Description: Identifies a particular switching machine as being primary in an office containing several switching machines. The primary concept is defined in Data Requirement Table 40.

Item Character Code:

Category: Fixed

Code is: Y for primary
N for not primary

Example: Y for a primary switching machine.

->TABLE D (Contd)<-

TCAS CODE CATALOG

ITEM NUMBER: 793

Item Name: AREA CODE

Item Name Abbreviation: AREA CODE

Item Description: Identifies a telephone area code for DDS (direct distance dialing) purposes.

Item Character Code:

Category: Fixed

Code is: The required codes are those presently allowed for DDD.

Example: 2Ø1 (for Northern New Jersey)

ITEM NUMBER: 794

Item Name: TELEPHONE EXCHANGE

Item Name Abbreviation: EXCHANGE

Item Description: Identifies a telephone exchange within a telephone area for DDD purposes.

Item Character Code:

Category: Fixed

Code is: Required code is three digit numeric

Example: 671 for 671 exchange.

->TABLE D (Contd)<-

TCAS CODE CATALOG

ITEM NUMBER: 795

Item Name: TELEPHONE NUMBER

Item Name Abbreviation: TEL NO

Item Description: Identifies a telephone number within an exchange for direct dialing purposes.

Item Character Code:

Category: Fixed

Code is: Required code is four digit telephone number from 0001 to 9999.

Example: 1212 for a telephone number.

ITEM NUMBER: 796

Item Name: INDEX INPUT TYPE

Item Name Abbreviation: INDEX INPUT TYPE

Item Description: Identifies the method of collecting or entering CGA and outage data for calculating the T-carrier index for an office.

Item Character Code:

Category: Fixed

Code is: TCAS for monitored by TCAS
TASC for monitored by TASC
NONE for not monitored

Example: TCAS for monitored by TCAS

->TABLE D (Contd)<-

TCAS CODE CATALOG

ITEM NUMBER: 801

Item Name: TELEPHONE COMPANY

Item Name Abbreviation: TELCO

Item Description: Identifies an user company.

Item Character Code:
Category: Fixed
Code is: Required code is the common language Bell System, or affiliated company name code per Practice 751-100-110.

COMPANY NAME	CHAR. CODE
New England Tel. & Tel. Co.	NE
New York Tel. Co.	NY
New Jersey Bell Tel. Co.	NJ
Bell Tel. Co. of Pennsylvania	PA
Diamond State Tel. Co.	DS
C&P Tel. Co. (Washington)	CD
C&P Tel. Co. of Maryland	CM
C&P Tel. Co. of Virginia	CV
All C&P Companies	CP
Southern Bell Tel. Co.	SB
South Central Bell Tel. Co.	SC
Ohio Bell Tel. Co.	OB
Michigan Bell Tel. Co.	MB
Indiana Bell Tel. Co.	NB
Wisconsin Tel. Co.	WT
Illinois Bell Tel. Co.	LB
Northwestern Bell Tel. Co.	NW
Southwestern Bell Tel. Co.	SW
Mountain States Tel. Co.	MS
Pacific Northwest Bell Tel. Co.	PN
Pacific Tel. Co.	PT
Bell Tel Co. of Nevada	NV
Southern New England Tel. Co.	SN
Cincinnati Bell Inc.	CB
Eastern Tel. Co.	ET
Malheur Home Tel Co.	MH
Southwestern Bell Tel. Co. of Arkansas	SR

Example: NY for New York Bell Telphone Company.

->TABLE D (Contd)<-

TCAS CODE CATALOG

ITEM NUMBER: 802

Item Name: DEPARTMENT

Item Name Abbreviation: DEPT

Item Description: Identifies a department within a given telephone company.

Item Character Code:

Category: Variable

Code is: Recommended code is the first element of the CLCSI (common language corporate structure identification code) per Practice 751-100-365.

Example: OPN for operations department.

ITEM NUMBER: 803

Item Name: AREA

Item Name Abbreviation: AREA

Item Description: Identifies an area or a department or a given telephone company.

Item Character Code:

Category: Variable

Code is: The first two elements of the CLCSI per Practice 751-100-365.

Example: OPNEA (Operations Department, Eastern Area)

->TABLE D (Contd)<-

TCAS CODE CATALOG

ITEM NUMBER: 804

Item Name: DIVISION

Item Name Abbreviation: DIV

Item Description: Identifies a division of a department within a given telephone company.

Item Character Code:

Category: Variable

Code is: Recommended code is the first three elements of the CLCSI code per Practice 751-100-365.

Example: OPNEA05 for Operation Department, Outside Division.

ITEM NUMBER: 805

Item Name: DISTRICT

Item Name Abbreviation: DIST

Item Description: Identifies a district of a department of a given telephone company.

Item Character Code:

Category: Variable

Code is: Recommended code is the first four elements of the CLCSI code per Practice 751-100-365.

Example: OPNEAOS12 for Operations Department, District 12.

->TABLE D (Contd)<-

TCAS CODE CATALOG

ITEM NUMBER: 806

Item Name: SUBDISTRICT

Item Name Abbreviation: SUBDISTRICT

Item Description: Identifies a subdistrict of a department of a telephone company.

Item Character Code:

Category: Variable

Code is: Recommended code is the CLCSI code per Practice 751-100-365.

Example: OPNEAOS12PT for Operations Department, Prescott office.

ITEM NUMBER: 893

Item Name: ROUTE DESIGNATION

Item Name Abbreviation: ROUTE DESIG

Item Description: Identifies the collection of span lines in one or more cables between two given offices.

Item Character Code:

Category: Variable

Code is: No recommended code.

Example: 42A for route 42A.

->TABLE D (Contd)<-

TCAS CODE CATALOG

ITEM NAME: 901

Item Name: OCTAL

Item Name Abbreviation: OCTAL

Item Designation: Data that can be stored in one sixteen bit word.

Item Character Code:

Category: Fixed code

Code is: A six digit octal number from 000000 to 177777

Example: 167235

ITEM NAME: 902

Item Name: ASCII

Item Name Abbreviation: ASCII

Item Designation: Two characters of data in the 1963 ASCII format.

Item Character Code:

Category: Fixed code

Code is: The 1963 ASCII code without parity (code on standard type 33 and type 35 teletypewriters)

Example: AB

->TABLE D (Contd)<-

TCAS CODE CATALOG

ITEM NAME: 9Ø3

Item Name: NULL

Item Name Abbreviation: NULL

Item Designation: Null item for use in conjunction with multi-word items. Where lists of item numbers and compact formats must match, a null is inserted for each word of a multi-word item after the first.

Item Character Code:

Category: Fixed code

ITEM NAME: 9Ø4

Item Name: FILE NUMBER

Item Name Abbreviation: FILE NO

Item Designation: Identifies a file in the TCAS data base.

Item Character Code:

Category: Fixed code

Code is: A decimal number from ØØ1 to 143 as defined in the TCAS file directory

Example: ØØ8 for the system file

->TABLE D (Contd)<-

TCAS CODE CATALOG

ITEM NAME: 905

Item Name: SEGMENT NUMBER

Item Name Abbreviation: SEG NO

Item Designation: Identifies an auxiliary segment of a variable length record in the TCAS data base.

Item Character Code:

Category: Fixed code

Code is: A decimal number from 001 to 255

Example: 004 for the 4th segment

ITEM NAME: 906

Item Name: FILE MANAGER WORD

Item Name Abbreviation: FILE MNGR WD

Item Designation: Describes the segment structure and lock status of a disk file record.

Item Character Code:

Category: Fixed code

Code is: A six digit octal number

Example: 100403 for a main record, active with three segments

->TABLE D (Contd)<-

TCAS CODE CATALOG

ITEM NAME: 907

Item Name: INDEX

Item Name Abbreviation: IDX

Item Designation: Identifies a record within a given TCAS data base file. Can only be used on fixed length record files with a maximum of 32767 records.

Item Character Code:

Category: Fixed code

Code is: A decimal number from 00001 to 32767

Example: 00129 for the 129th record

ITEM NAME: 908

Item Name: RELATIVE TRACK

Item Name Abbreviation: RELATIVE TRACK

Item Designation: Identifies a relative track with a disk file. (The track size is not necessarily the physical track size.)

Item Character Code:

Category: Fixed code

Code is: A decimal number from 00001 to 32767 preceded by a sign character (+ or -). The minus sign denotes an end-of-list. On output, the plus sign is supressed.

Example: -00033 for end-of list, 33rd track

->TABLE D (Contd)<-

TCAS CODE CATALOG

ITEM NAME: 909

Item Name: RELATIVE WORD

Item Name Abbreviation: RLTV WD

Item Designation: Identifies a relative word within a track of disk file. (The track size os not the physical track size.)

Item Character Code:

Category: Fixed code

Code is: A decimal number from 00001 to 32767 preceded by a sign character (+ or -). On output, the plus sign is supressed.

Example: +00033 for the 33rd word

ITEM NAME: 910

Item Name: ENTRY STATUS

Item Name Abbreviation: ENT STAT

Item Designation: Indicates whether a directory entry is active.

Item Character Code:

Category: Fixed code

Code is: ACTIVE = Active
INACTIVE = Inactive

Example: ACTIVE for active directory entry

->TABLE D (Contd)<-

TCAS CODE CATALOG

ITEM NAME: 911

Item Name: ITEM STRING NUMBER

Item Name Abbreviation: ITEM STRG NO

Item Designation: Identifies an item string in the TCAS Code Catalog by a number

Item Character Code:

Category: Fixed code

Code is: A decimal number from 11Ø1 to 1999 as defined in the TCAS Code Catalog.

Example: 12Ø1 for system identification

ITEM NAME: 912

Item Name: ITEM STRING MNEMONIC

Item Name Abbreviation: ITEM STRING MNEMONIC

Item Designation: Identifies an item string in the TCAS Code Catalog by its mnemonic.

Item Character Code:

Category: Fixed code

Code is: The item string mnemonic given in the TCAS Code Catalog

Example: SYSID for system identification

->TABLE D (Contd)<-

TCAS CODE CATALOG

ITEM NAME: 913

Item Name: CORPORATE LEVEL NUMBER

Item Name Abbreviation: CPR LEV NO

Item Designation: Identifies a level in the corporate structure.

Item Character Code:

Category: Fixed code

Code is: 30 = User company
31 = Department
32 = Area, region, or territory
33 = Division
34 = District
35 = Subdistrict
36 = Office

Example: 31 for department

ITEM NAME: 915

Item Name: CARRIER REFERENCE NUMBER

Item Name Abbreviation: CXR REF NO

Item Designation: Identifies a carrier system or patch line by a short code.

Item Character Code:

Category: Fixed code

Code is: Three digits, a character R and three digits, where the six digits together form a self-checking number of weight W=6

Example: 100R102 for system 101 D1 ABCDCA01 WXYZCA03

->TABLE D (Contd)<-

TCAS CODE CATALOG

ITEM NAME: 917

Item Name: BOTH ENDS REPORTED STATUS

Item Name Abbreviation: BTH ENDS RPTD STAT

Item Designation: Indicated whether CGA alarms have been reported on both ends of a T1 System.

Item Character Code:

Category: Fixed code

Code is: Y = Reported
N = Not reported

Example: Y for reported

ITEM NAME: 918

Item Name: TROUBLE CASE DISPLAY STATUS

Item Name Abbreviation: TCS DISPL STAT

Item Designation: Indicates whether a trouble case on this entity is being displayed.

Item Character Code:

Category: Fixed code

Code is: Y = Displayed
N = Not being displayed

Example: Y for being displayed

->TABLE D (Contd)<-

TCAS CODE CATALOG

ITEM NAME: 919

Item Name: SHORT OUTAGE THRESHOLD STATUS

Item Name Abbreviation: SH OTG TH STAT

Item Designation: Indicates whether the short outage threshold has been exceeded by a given T1 System.

Item Character Code:

Category: Fixed code

Code is: Y = Threshold exceeded
N = Threshold not exceeded

Example: Y for threshold exceeded

ITEM NAME: 920

Item Name: SINGLE OUTAGE THRESHOLD STATUS

Item Name Abbreviation: SGL OTG TH STAT

Item Designation: Indicates whether the outage threshold has been exceeded by a given T1 System.

Item Character Code:

Category: Fixed code

Code is: Y = Exceeded
N = Not exceeded

Example: Y for exceeded

->TABLE D (Contd)<-

TCAS CODE CATALOG

ITEM NAME: 921

Item Name: CGA RATE THRESHOLD STATUS

Item Name Abbreviation: CGA RATE TH STAT

Item Designation: Indicates whether the CGA rate threshold has been exceeded by a given system.

Item Character Code:

Category: Fixed code

Code is: Y = Exceeded
N = Not exceeded

Example: Y for exceeded

ITEM NAME: 922

Item Name: PATCH STATUS

Item Name Abbreviation: PTCH STAT

Item Designation: Indicates whether a patch is up on a given entity.

Item Character Code:

Category: Fixed code

Code is: Y = Patched
N = Not patched

Example: Y for patched

->TABLE D (Contd)<-

TCAS CODE CATALOG

ITEM NAME: 923

Item Name: ALARM STATUS

Item Name Abbreviation: ALM STAT

Item Designation: Indicates whether an alarm is up on the given entity.

Item Character Code:

Category: Fixed code

Code is: Y = Alarm up
N = Alarm not up

Example: Y for alarm up

ITEM NAME: 924

Item Name: RED ALARM STATUS

Item Name Abbreviation: RED ALM STAT

Item Designation: Indicates whether a red alarm is up on a given D bank/digroup.

Item Character Code:

Category: Fixed code

Code is: Y = Red alarm up
N = Red alarm not up

Example: Y for red alarm up

->TABLE D (Contd)<-

TCAS CODE CATALOG

ITEM NAME: 925

Item Name: TELEMETRY REPORTED STATUS

Item Name Abbreviation: TLM RPTD STAT

Item Designation: Indicates whether telemetry has been reported on a given piece of equipment.

Item Character Code:

Category: Fixed code

Code is: Y = Reported
N = Not reported

Example: Y for reported

ITEM NAME: 926

Item Name: ALARM THRESHOLD STATUS

Item Name Abbreviation: ALM TH STAT

Item Designation: Indicates whether the alarm threshold has been passed by a given entity.

Item Character Code:

Category: Fixed code

Code is: Y = Past threshold
N = Not past threshold

Example: Y for past threshold

->TABLE D (Contd)<-

TCAS CODE CATALOG

ITEM NAME: 927

Item Name: TELEMETRY AUDITED STATUS

Item Name Abbreviation: TLM ADT STAT

Item Designation: Indicates whether the telemetry has been audited on a given entity.

Item Character Code:

Category: Fixed code

Code is: Y = Audited
N = Not audited

Example: Y for audited

ITEM NAME: 928

Item Name: LOGICAL REMOTE

Item Name Abbreviation: LGCL REM

Item Designation: Identifies an E-telemetry remote by a decimal number.

Item Character Code:

Category: Fixed code

Code is: A decimal number from ØØ1 to 128

Example: Ø13

->TABLE D (Contd)<-

TCAS CODE CATALOG

ITEM NAME: 929

Item Name: FILE NAME

Item Name Abbreviation: FILE NM

Item Designation: Identifies a file in the TCAS data base mnemonically.

Item Character Code:

Category: Fixed code

Code is: The file name in the TCAS file directory

Example: SYSTEM for File 8

ITEM NAME: 930

Item Name: WORD NUMBER

Item Name Abbreviation: WD NO

Item Designation: Identifies a word within a given record in the data base.

Item Character Code:

Category: Fixed code

Code is: A decimal number from 000 to 999. for a record with N word, the range is 0 to N-1

Example: 004 for the 5th word

->TABLE D (Contd)<-

TCAS CODE CATALOG

ITEM NUMBER: 931

Item Name: FIXED CODE

Item Name Abbreviation: FXD CD

Item Description: A character string used as a code for a fixed code item.

Item Character Code:

Category: Fixed code

Code is: Individual items for required code

Example: ALARMED for system with alarm and not on patch

ITEM NUMBER: 932

Item Name: CGA STATUS

Item Name Abbreviation: CGA STAT

Item Description: Indicates whether the CGA is alarmed on a D bank/digroup.

Item Character Code:

Category: Fixed code

Code is: Y for alarmed
N for not alarmed

Example: Y for alarmed

->TABLE D (Contd)<-

TCAS CODE CATALOG

ITEM NUMBER: 933

Item Name: TABLE INDEX

Item Name Abbreviation: TABLE IDX

Item Description: Identifies a particular table type within a generic grouping of table types (See Item 731).

Item Character Code:

Category: Fixed code

Code is: A decimal number from ØØ1 to 255.

Example: ØØ4

ITEM NUMBER: 934

Item Name: COMPACT CODE WORD COUNT

Item Name Abbreviation: COMP CD WD CT

Item Description: Indicates the number of words of compact code that an option set contributes to a queue entry in the interactive language.

Item Character Code:

Category: Fixed code

Code is: A decimal number from 1 to 6 equal to the number in the character code.

Example: 2 for two words

->TABLE D (Contd)<-

TCAS CODE CATALOG

ITEM NUMBER: 935

Item Name: OPTION SET SEQUENCE NUMBER

Item Name Abbreviation: OPT SET SEQ NO

Item Description: Indicates the ordering of option sets within input messages in the interactive language.

Item Character Code:

Category: Fixed code

Code is: A decimal number in the range 1 to 9.

Example: 2 for option set 2

ITEM NUMBER: 936

Item Name: QUEUE NUMBER

Item Name Abbreviation: QUE NO

Item Description: Identifies a queue for transmitting information between programs in the TCAS.

Item Character Code:

Category: Fixed code

Code is: A decimal number in the range of 00001 to 32767

Example: 00019 for queue 19

->TABLE D (Contd)<-

TCAS CODE CATALOG

ITEM NUMBER: 937

Item Name: REPLY TYPE

Item Name Abbreviation: RPLY TYP

Item Description: Indicates the type of reply expected to a dialogue output in the interactive language.

Item Character Code:

Category: Fixed code

Code is: NONE = No response expected
TEXT = Text
KW = Keyword unit
OS = Option set
IL = Item list

Example: IL for item list

ITEM NUMBER: 938

Item Name: CHARACTER COUNT

Item Name Abbreviation: CHAR CT

Item Description: Indicates the number of characters in a string.

Item Character Code:

Category: Fixed code

Code is: A decimal number in the range of -32767 to +32767. Normally, negative numbers are used.

Example: -ØØØØ5 for five characters

->TABLE D (Contd)<-

TCAS CODE CATALOG

ITEM NUMBER: 941

Item Name: PATCH LINE ALARM STATUS

Item Name Abbreviation: PTCH LN ALM

Item Description: Indicates the monitored status of the patch line.

Item Character Code:

Category: Fixed code

Code is: Y = Alarmed
N = Not alarmed

Example: Y for alarmed

ITEM NUMBER: 942

Item Name: RESERVED STATUS

Item Name Abbreviation: RSV STAT

Item Description: Indicates whether a patch line is reserved for a system trouble case.

Item Character Code:

Category: Fixed code

Code is: Y = Reserved
N = Not reserved

Example: Y for reserved

->TABLE D (Contd)<-

TCAS CODE CATALOG

ITEM NUMBER: 943

Item Name: PATCH UP STATUS

Item Name Abbreviation: PTCH UP STAT

Item Description: Indicates that a given patch is currently up on a system trouble case.

Item Character Code:

Category: Fixed code

Code is: Y = Patch up
N = Patch not up

Example: Y for patch up

ITEM NUMBER: 944

Item Name: PATCH DOWN STATUS

Item Name Abbreviation: PTCH DN STAT

Item Description: Indicates that a given patch has been taken down on a system trouble case.

Item Character Code:

Category: Fixed code

Code is: Y = Patch down
N = Patch not down

Example: Y for patch down

->TABLE D (Contd)<-

TCAS CODE CATALOG

ITEM NUMBER: 945

Item Name: UNMONITORED STATUS

Item Name Abbreviation: UNMOND STAT

Item Description: Indicates that a patch line is not monitored but has its alarm status bit set by a downstream MLSI.

Item Character Code:

Category: Fixed code

Code is: Y = Unmonitored
N = Monitored

Example: Y for unmonitored

ITEM NUMBER: 951

Item Name: ALIAS FLAG

Item Name Abbreviation: ALIAS FLG

Item Description: Indicates that a code for a variable coded item is an alias.

Item Character Code:

Category: Fixed code

Code is: Y = Alias
N = Not alias

Example: Y for alias

->TABLE D (Contd)<-

TCAS CODE CATALOG

ITEM NUMBER: 952

Item Name: TERMINAL MONITORED FLAG

Item Name Abbreviation: TERM MOND FLG

Item Description: Indicates that one or both terminals of a T-Carrier System are monitored.

Item Character Code:

Category: Fixed code

Code is: Y = Monitored
N = Not monitored

Example: Y for monitored

ITEM NUMBER: 953

Item Name: MAINTENANCE PATCH STATUS

Item Name Abbreviation: MTCE PTCH STAT

Item Description: Indicates that a patch line is being used for a maintenance patch.

Item Character Code:

Category: Fixed code

Code is: Y = Being used for a maintenance patch
N = Not being used for a maintenance patch

Example: Y for being used as a maintenance patch

->TABLE D (Contd)<-

TCAS CODE CATALOG

ITEM NUMBER: 954

Item Name: RESTORATION PATCH STATUS

Item Name Abbreviation: RSTN PTCH STAT

Item Description: Indicates that a patch line is being used for a restoration patch.

Item Character Code:

Category: Fixed code

Code is: Y = Being used for a restoration patch
N = Not being used for a restoration patch

Example: Y for being used as a restoration patch

ITEM NUMBER: 955

Item Name: SECTIONALIZATION IN PROGRESS

Item Name Abbreviation: SECTNLZN LN PROG

Item Description: Indicates that sectionalization has been initiated on a given system.

Item Character Code:

Category: Fixed code

Code is: Y = In progress
N = Not in progress

Example: Y for in progress

->TABLE D (Contd)<-

TCAS CODE CATALOG

ITEM NUMBER: 956

Item Name: SECTIONALIZATION TROUBLE CASE OPEN FLAG

Item Name Abbreviation: SECTNLZN TCO FLG

Item Description: Indicates that a trouble case has been opened due to the results of a sectionalization.

Item Character Code:

Category: Fixed code

Code is: Y = Open due to sectionalization
N = Not open due to sectionalization

Example: Y for open due to sectionalization

ITEM NUMBER: 957

Item Name: AUTOMATIC SECTIONALIZATION FLAG

Item Name Abbreviation: AUTO SECTNLZN FLG

Item Description: Indicates that the system has been automatically sectionalized.

Item Character Code:

Category: Fixed code

Code is: Y = Has been automatically sectionalized
N = Has not been automatically sectionalized

Example: Y for has been automatically sectionalized

->TABLE D (Contd)<-

TCAS CODE CATALOG

ITEM NUMBER: 958

Item Name: DLM AVAILABLE FLAG

Item Name Abbreviation: DLM AVAIL FLG

Item Description: Indicates the DLM is available for use, or not for use.

Item Character Code:

Category: Fixed code

Code is: Y = Available
N = Not available

Example: Y for available

ITEM NUMBER: 959

Item Name: DLM BUSY FLAG

Item Name Abbreviation: DLM BUSY FLG

Item Description: Indicates the DLM busy, or not busy.

Item Character Code:

Category: Fixed code

Code is: Y = Busy
N = Not busy

Example: Y is for busy

->TABLE D (Contd)<-

TCAS CODE CATALOG

ITEM NUMBER: 960Ø

Item Name: DLM MEASUREMENT ABORTED FLAG

Item Name Abbreviation: DLM MEAS ABT'D FLG

Item Description: Indicates a DLM measurement is incomplete.

Item Character Code:

Category: Fixed code

Code is: Y = Aborted
N = Not aborted

Example: Y for DLM measurement being aborted

ITEM NUMBER: 961

Item Name: AZ LINE MEASUREMENT FLAG

Item Name Abbreviation: AZ LM FLG

Item Description: Indicates the DLM measurement was made in the AZ direction.

Item Character Code:

Category: Fixed code

Code is: Y = AZ measurement made
N = AZ measurement not made

Example: Y for AZ measurement was made

->TABLE D (Contd)<-

TCAS CODE CATALOG

ITEM NUMBER: 962

Item Name: ZA LINE MEASUREMENT FLAG

Item Name Abbreviation: ZA LM FLG

Item Description: Indicates the DLM measurement was made in the ZA direction.

Item Character Code:

Category: Fixed code

Code is: Y = ZA measurement made
N = ZA measurement not made

Example: Y for ZA measurement was made

ITEM NUMBER: 963

Item Name: DLM EVENTS OVERFLOW FLAG

Item Name Abbreviation: DLM EVOVF FLG

Item Description: Indicates the number of events (bipolar violations plus pulse absences) has exceeded the capacity of the DLM hardware counter (99ØØØ).

Item Character Code:

Category: Fixed code

Code is: Y = Overflow
N = No overflow

Example: Y for overflow

->TABLE D (Contd)<-

TCAS CODE CATALOG

ITEM NUMBER: 964

Item Name: DLM T1 FLAG

Item Name Abbreviation: DLM T1 FLG

Item Description: Indicates that the DLM has measured the T1 signal as opposed to the T1C signal.

Item Character Code:

Category: Fixed code

Code is: Y = T1 signal
N = Not T1 signal (T1C signal)

Example: Y for T1 signal

ITEM NUMBER: 965

Item Name: DLM ALL ONES FLAG

Item Name Abbreviation: DLM ALL1 FLG

Item Description: Indicates that the DLM has measured a signal containing all ones.

Item Character Code:

Category: Fixed code

Code is: Y = All ones
N = Not all ones

Example: Y for all ones

->TABLE D (Contd)<-

TCAS CODE CATALOG

ITEM NUMBER: 966

Item Name: DLM ERROR SECONDS OVERFLOW FLAG

Item Name Abbreviation: DLM ESOVF FLG

Item Description: Indicates the number of error seconds has exceeded the capacity of the DLM hardware counter (99).

Item Character Code:

Category: Fixed code

Code is: Y = Overflow
N = No overflow

Example: Y for overflow

ITEM NUMBER: 967

Item Name: DLM ABNORMAL CONDITION FLAG

Item Name Abbreviation: DLM AC FLG

Item Description: Indicates the DLM measurement has not sucessfully initiated, or the DLM has not been manually seized.

Item Character Code:

Category: Fixed code

Code is: Y = Abnormal condition
N = Not abnormal condition

Example: Y for abnormal condition

->TABLE D (Contd)<-

TCAS CODE CATALOG

ITEM NUMBER: 968

Item Name: DLM CONTINUOUS MEASUREMENT FLAG

Item Name Abbreviation: DLM CM FLG

Item Description: Indicates the DLM measurement mode.

Item Character Code:

Category: Fixed code

Code is: Y = In continuous measurement mode
N = Not in continuous measurement mode

Example: Y for in continuous measurement mode

ITEM NUMBER: 969

Item Name: DLM LONG MEASUREMENT FLAG

Item Name Abbreviation: DLM LG FLG

Item Description: Indicates that the DLM is in a 20-second measurement mode.

Item Character Code:

Category: Fixed code

Code is: Y = In a 20-second measurement mode
N = Not in a 20-second measurement mode

Example: Y for in a 20-second measurement mode

->TABLE D (Contd)<-

TCAS CODE CATALOG

ITEM NUMBER: 970

Item Name: DLM MEASUREMENT FINISHED FLAG

Item Name Abbreviation: DLM MF FLG

Item Description: Indicates that the DLM measurement is finished.

Item Character Code:

Category: Fixed code

Code is: Y = Finished
N = Not finished

Example: Y for DLM measurement finished

ITEM NUMBER: 971

Item Name: DLM QUASI-RANDOM SIGNAL SOURCE (QRSS) FLAG

Item Name Abbreviation: DLM QRSS FLG

Item Description: Indicates the DLM measurement was made on a signal from the QRSS.

Item Character Code:

Category: Fixed code

Code is: Y = QRSS
N = Not QRSS

Example: Y for DLM measurement made on a QRSS signal.

->TABLE D (Contd)<-

TCAS CODE CATALOG

ITEM NUMBER: 972

Item Name: DLM ABSENCE VIOLATION FLAG

Item Name Abbreviation: DLM ABV FLG

Item Description: Indicates that the DLM has detected at least one pulse absence during a measurement.

Item Character Code:

Category: Fixed code

Code is: Y = One pulse absence detected
N = No one pulse absence detected

Example: Y for DLM detected a one pulse absence

ITEM NUMBER: 973

ITEM NAME: ACO EXECUTED FLAG

ITEM NAME ABBREVIATION: ACO EXCT-D FLG

ITEM DESCRIPTION: Indicates that an alarm cutoff (ACO) command has been sent to the office.

Item Character Code:

Category: Fixed code

Code is: Y = ACO sent to the office
N = ACO not sent to the office

Example: Y for ACO being sent to the office

->TABLE D (Contd)<-

TCAS CODE CATALOG

ITEM NUMBER: 974

Item Name: NO TROUBLE FOUND FLAG

Item Name Abbreviation: NO TBL FND FLG

Item Description: Indicates that a pattern has been determined not to be the cause of a multi-system failure.

Item Character Code:

Category: Fixed code

Code is: Y = Determined to be the cause
N = Not determined to be the cause

Example: Y for determined to be the cause

ITEM NUMBER: 975

Item Name: TROUBLE FOUND FLAG

Item Name Abbreviation: TBL FND FLG

Item Description: Indicates that a pattern has been determined to be the cause of a multi-system failure.

Item Character Code:

Category: Fixed code

Code is: Y = Determined to be the cause
N = Not determined to be the cause

Example: Y for determined to be the cause

->TABLE D (Contd)<-

TCAS CODE CATALOG

ITEM NUMBER: 976

Item Name: MANUALLY OPENED PATTERN FLAG

Item Name Abbreviation: MAN OPN PATT FLG

Item Description: Indicates that the pattern trouble case has been opened manually.

Item Character Code:

Category: Fixed code

Code is: Y = Opened trouble case manually
N = Not opened manually

Example: Y for trouble case opened manually

ITEM NUMBER: 977

Item Name: PATTERN VERIFIED FLAG

Item Name Abbreviation: PATT VRFD FLG

Item Description: Indicates that a pattern has been automatically verified as the source of a mulit-system failure.

Item Character Code:

Category: Fixed code

Code is: Y = Verified
N = Not verified

Example: Y for pattern being automatically verified

->TABLE D (Contd)<-

TCAS CODE CATALOG

ITEM NUMBER: 978

Item Name: CABLE PATTERN TODAY FLAG

Item Name Abbreviation: CBL PATT TDY FLG

Item Description: Indicates that a cable has exceeded the current day failure threshold.

Item Character Code:

Category: Fixed code

Code is: Y = Current day failure threshold exceeded
N = Current day failure threshold not exceeded

Example: Y for current day failure threshold exceeded

ITEM NUMBER: 979

Item Name: CABLE PATTERN RECENTLY FLAG

Item Name Abbreviation: CBL PATT REC FLG

Item Description: Indicates a cable has exceeded the recent failures threshold.

Item Character Code:

Category: Fixed code

Code is: Y = Cable has exceeded the recent failure threshold
N = Cable has not exceeded the recent failures threshold

Example: Y for cable has exceeded the recent failre threshold

->TABLE D (Contd)<-

TCAS CODE CATALOG

ITEM NUMBER: 980

Item Name: CABLE PATTERN NOW FLAG

Item Name Abbreviation: CBL PATT NOW FLG

Item Description: Indicates that a cable has exceeded the threshold for currently failed systems.

Item Character Code:

Category: Fixed code

Code is: Y = Cable has exceeded the threshold for currently failed systems
N = Cable has not exceeded the threshold for currently failed systems

Example: Y for cable has exceeded the threshold for currently failed systems

ITEM NUMBER: 981

Item Name: SIDE SYSTEM PATTERN FLAG

Item Name Abbreviation: SD SYS PATT FLG

Item Description: Indicates that a pattern is a side system pair pattern.

Item Character Code:

Category: Fixed code

Code is: Y = Side system pair
N = Not a side system pair

Example: Y for a side system

->TABLE D (Contd)<-

TCAS CODE CATALOG

ITEM NUMBER: 982

Item Name: SHELF PATTERN FLAG

Item Name Abbreviation: SHLF PATT FLG

Item Description: Indicates that a pattern is a shelf pattern.

Item Character Code:

Category: Fixed code

Code is: Y = Shelf pattern
N = Not a shelf pattern

Example: Y for a shelf pattern

ITEM NUMBER: 983

Item Name: TERMINAL BAY PATTERN FLAG

Item Name Abbreviation: TERM BAY PATT FLG

Item Description: Indicates that a pattern is a terminal bay pattern.

Item Character Code:

Category: Fixed code

Code is: Y = Terminal bay pattern
N = Not a terminal bay pattern

Example: Y for a terminal bay pattern

->TABLE D (Contd)<-

TCAS CODE CATALOG

ITEM NUMBER: 984

Item Name: SYSTEM EXPERIENCING CGAS FLG

Item Name Abbreviation: SYS EXPRNC CGA FLG

Item Description: Indicates that a system is on the list of systems that have experienced CGAs in the past two weeks.

Item Character Code:

Category: Fixed code

Code is: Y = Experienced CGAs in the past two weeks
N = Has not experienced CGAs in the past two weeks

Example: Y for experience CGAs in the pase two weeks

ITEM NUMBER: 985

Item Name: OFFICE A ACO'D FLAG

Item Name Abbreviation: OFF A ACO'D FLG

Item Description: Indicates that the alarm cutoff (ACO) command has been sent to terminal A.

Item Character Code:

Category: Fixed code

Code is: Y = ACO command sent to terminal A
N = ACO command not sent to terminal A

Example: Y for ACO command sent to terminal A

->TABLE D (Contd)<-

TCAS CODE CATALOG

ITEM NUMBER: 986

Item Name: OFFICE Z ACO'D FLAG

Item Name Abbreviation: OFF Z ACO'D FLG

Item Description: Indicates that the alarm cutoff (ACO) command has been sent to terminal Z.

Item Character Code:

Category: Fixed code

Code is: Y = ACO command sent to terminal Z
N = ACO command not sent to terminal Z

Example: Y for ACO command sent to terminal Z

ITEM NUMBER: 987

Item Name: DLM RED FLAG

Item Name Abbreviation: DLM RED FLG

Item Description: Indicates that the DLM has detected an out-of-frame condition during a measurement.

Item Character Code:

Category: Fixed code

Code is: Y = DLM has detected an out-of-frame condition
N = DLM has not detected an out-of-frame conditon.

Example: Y for DLM has detected an out-of-frame condition

->TABLE D (Contd)<-

TCAS CODE CATALOG

ITEM NUMBER: 988

Item Name: DLM YELLOW FLAG

Item Name Abbreviation: DLM YEL FLG

Item Description: Indicates that the DLM has detected the far-end out-of-frame signal during a measurement.

Item Character Code:

Category: Fixed code

Code is: Y = DLM has detected a far-end out-of-frame signal
N = DLM has not detected a far-end out-of-frame signal

Example: Y for DLM has detected a far-end out-of-frame signal

ITEM NUMBER: 994

Item Name: REPORT STATISTICS FLAG

Item Name Abbreviation: REPT STAT FLG

Item Description: Indicates that statistical failure activity reports are allowed for a particular department's corporate structure entities.

Item Character Code:

Category: Fixed

Code is: Y for allowed
N for not allowed

Example: Y for allowed.

->TABLE D (Contd)<-

TCAS CODE CATALOG

ITEM NUMBER: 995

Item Name: REPORT PATCHING FLAG

Item Name Abbreviation: REPT PTCH FLAG

Item Description: Indicates that patching activity reports are allowed for a particular department's corporate structure entities.

Item Character Code:

Category: Fixed

Code is: Y for allowed
N for not allowed

Example: Y for allowed.

ITEM NUMBER: 996

Item Name: REPORT CONSTRUCTION FLAG

Item Name Abbreviation: REPT CONST FLAG

Item Description: Indicates whether outside plant construction activity reports are allowed for a particular department's corporate structure entities.

Item Character Code:

Category: Fixed

Code is: Y for allowed
N for not allowed

Example: Y for allowed.

->TABLE D (Contd)<-

TCAS CODE CATALOG

ITEM NUMBER: 997

Item Name: REPORT CENTRAL OFFICE WORK FLAG

Item Name Abbreviation: REPT COWRK FLG

Item Description: Indicates that central office work activity reports are allowed for a particular department's corporate structure entities.

Item Character Code:

Category: Fixed

Code is: Y for allowed
N for not allowed

Example: Y for allowed.

TABLE E

MAGNETIC TAPE REQUIREMENTS

ITEM	REQUIREMENT
Tape	1/2 inch, 9 track
Tape Density	1600 CPI, PE
Parity	Odd character parity
Data Format	ASCII
Files Per Volume	As required, up to 99
Logical Record Size	Fixed length, 80 characters
Physical Record (Block) Size	2000 characters (25 logical records)
File Completion	If the last block in a file contains fewer than 25 logical records, it must be filled out with dummy logical records. Each dummy logical record must consist of ASCII characters EFEFEFEFEF'...' having E in the first character position, and including at least 5 EF pairs with no imbedded blanks or punctuation.
Volume Header Label	A volume header label is required as the first block in the volume (reel). The volume header label shall not be used in any other place in the volume.
File Header Label	A file header label (HDR1) is required, followed by a tape mark (file mark), before the start of data in each file in the volume. A file header label shall also precede any data in a file continued from another tape volume.
File Trailer Label	A file trailer label (EOF1 or EOV1) is required, following a tape mark, at the end of the data in each file. If the file is complete with the last data block, this lablel shall be of the EOF1 type. If a continuation reel is required, an EOV1 label shall be used. Only an incomplete, last file on a given volume may be closed with an EOV1 label.
Tape Mark	A tape mark shall separate one file trailer label from any following file header label. The last file trailer label shall be followed by two tape marks to signify end-of-tape.
Standard System and User Labels	Additional standard system and user labels are permissible, but not required by TCAS.
Label Contents	Label contents shall be in ASCII. Any numerical field shall be right-justified with leading zeroes to complete the field.

TABLE F

VOLUME HEADER LABEL REQUIREMENTS

FIELD	NAME	POSITION	LENGTH	CONTENTS
1	Label Identifier	1-3	3	VOL (constant)
2	Label Number	4	1	1 (constant)
3	Volume Serial No. Identifier Serial No.	5-10 5-7 8-10	6 3 3	 Alphanumeric characters digits
4	Accessibility	11	1	Space
5	Reserved	12-31	20	Spaces
6	Reserved	32-37	6	Spaces
7	Owner Identification AT&TCo Code Reserved Owner Name	38-51 38-39 40-42 43-51	14 2 3 9	 Two digits* Spaces Common Language Location Code or other†
8	Reserved	52-79	28	Spaces
9	Label Standard	80	1	1 (standard tape)

* Standard company and state codes per GL74-04-095 (M455A) letter.

† This item is to be coordinated with the TCAS coordinator for the TCAS central receiving the tape.

TABLE G

FILE HEADER LABEL REQUIREMENTS

FIELD	NAME	POSITION	LENGTH	CONTENTS
1	Label Identifier	1-3	3	HDR (constant)
2	Label Number	4	1	1 (constant)
3	File Identifier	5-21	17	File identification code (with no imbedded spaces)
	Use Code	5-7	3	DAT (constant)*
	File Number	8-9	2	Digits specifying file position in sequence on the first tape volume continuation volumes. The first file number in the sequence shall be 01.
	Use Location	10-20	11	TCAS center's equipment location in common language or other code†.
	Reserved	21	1	Space
4	Serial Number or first Volume	22-27	6	Same code as appears in Field 3 of volume header label of the first volume of the file.
5	Volume Sequence No.	28-31	4	Sequence number of this volume in the file. It shall start with 0001, incremented by one in each successive volume in the file.
6	File Sequence No.	32-35	4	Sequence number of this file in the volume or set of volumes. It shall be the same number in all labels for a given file, starting with 0001 for the first file in a set of volumes.
7	Generation Number (Optional)	36-39	4	Digits, starting with 0001 when a file is first created (if unused, must be spaces).
8	Generation Version (Optional)	40-41	2	Digits, starting with 00 when the first version is created (if unused, must be spaces).
9	Creation Date	42-47	6	Year and day of file creation.
	Empty	42	1	Space
	Year	43-44	2	00-99
	Day	45-57	3	001-366

See notes at end of table.

TABLE G (Contd)

FILE HEADER LABEL REQUIREMENTS

FIELD	NAME	POSITION	LENGTH	CONTENTS
10	Expiration Date	48-53	6	Creation date +5 years (indefinite retention)‡
	Empty	48	1	Space
	Year	49-50	2	00-99
	Day	51-53	3	001-366
11	File Security	54	1	Space
12	Block Count	55-60	6	000000 (constant)
13	System Code (Optional)	61-73	13	Alphanumeric characters identifying the operating system that recorded this file (if not used, must be spaces).
14	Reserved	74-80	7	Spaces

* The use code is constant only to the extent that these instructions apply to data base generation. Other TCAS tapes will contain use codes such as HIS, RPT, and IMG.

† This item is to be coordinated with the TCAS coordinator for the TCAS central receiving the tape.

‡ The expiration date for the first file effectively determines the protected lifetime of the whole volume. Overwriting any unprotected file eliminates access to succeeding files which were recorded earlier.

TABLE H

FILE TRAILER LABEL REQUIREMENTS

FIELD	NAME	POSITION	LENGTH	CONTENTS
1	Label Identifier	1-3	3	EOF: end of file;EOV: end of volume, more data to follow on next reel.
2	Label Number	4	1	1 (constant)
3-11	Same as corresponding fields in File Header Label (Optional)	5-54	50	Same as corresponding fields in file header label (if not used, must be spaces).
12	Block Count	55-60	6	Digits indicating number of data blocks (exclusive of labels and tape marks) since the preceding file header label.
13,14	Same as corresponding fields in File Header Label (Optional)	61-80	20	Same as corresponding fields in file header label (if not used, must be spaces).