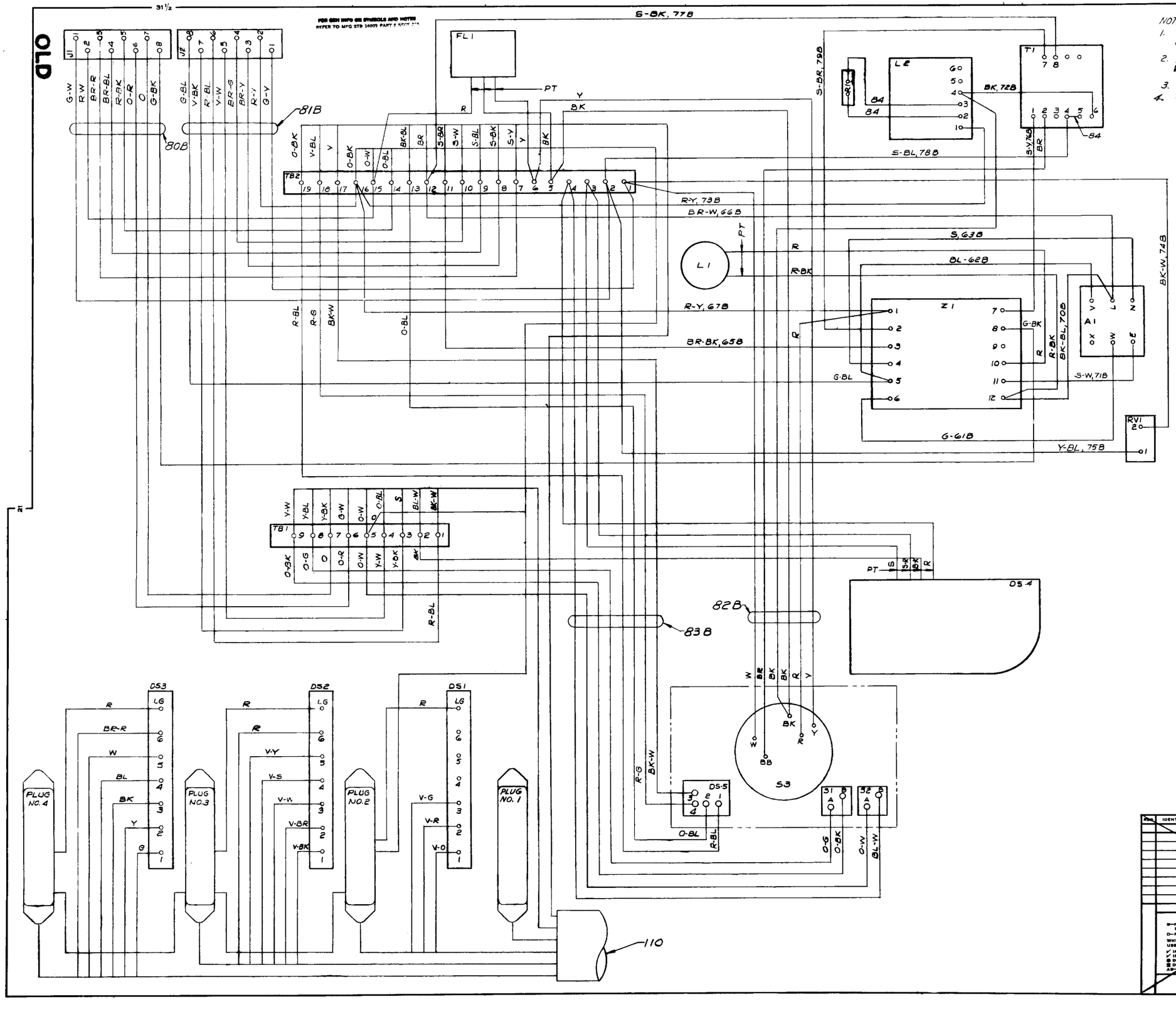

NOTES:

1. ITEM NUMBERS REFERRED TO ARE SHOWN IN STOCK LIST OF ASSEMBLY DRAWING A-579199.
2. ALL SOLDERING SHALL BE IN ACCORDANCE WITH (X-524 METHOD C) WE-50006, METHOD C.
3. PT-LEADS FURNISHED WITH COMPONENT.
4. < > INDICATES BTL INFORMATION WHICH SHALL NOT BE USED FOR MANUFACTURING PURPOSES.

OLD

A-579201	
DRAWN	
~~CHECKED~~	~~COOK~~
ISSUE-1	4-21-59
REDRAWN DUE TO EXTENSIVE CHANGES IN DESIGN.	(441381-AI-L)
ISSUE-2	8-21-59
ADDED: "61IA" TO TITLE BOX.	
OMITTED: LEAD AS SHOWN BELOW:	

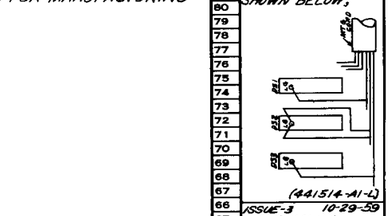

(441514-AI-L)

ISSUE-3	10-29-59
PICTORIALLY CHANGED TO AGREE WITH D-100A CORD.	(441490-AI-L)
ISSUE-4	12-8-59
TITLE WAS 610A & 611A TEL. SET WIR DIAG	(553159-D-C)
ISSUE-5	8-25-60
TITLE WAS 610A TEL. SET WIR. DIAG. (EIR 610A1 & 610A2 -50-51-60 & -61 CODES)	
ISSUE-6	9-14-60
MANUFACTURING INFORMATION WAS SPEC FOR 610A, 610A1, & 610A2 TEL SETS	(553204-D)
ISSUE-7	2-17-61

MANUFACTURE DISCONTINUED

REF.	IDENTIFICATION NO.	DESCRIPTION	REF DESIG	NOTE	ITEM
		STOCK LIST			

SUPPLEMENTARY DRAWINGS

SIGNIFICANCE OF SYMBOLS AND ITEM NUMBER SUFFIXES

S—PARTIAL ASSEMBLIES OR OTHER DRAWINGS WITH STOCK LISTS
D—PARTS SHIPPED LOOSE
} ITEMS NOT SPECIFIED AS "S" OR "D" PARTS IN ITEM COLUMN ARE INDIVIDUAL ("A") PARTS.

WHERE ITEMS HAVE NO REFERENCE DESIGNATIONS, THEY MAY BE USED IN LIEU OF ITEM NUMBERS ON THE DELINEATION.

✓ IN "REQ" COLUMN OF STOCK LIST—QUANTITY AS REQUIRED
✓ IN "REQ" COLUMN OF SUPPLEMENTARY DWG LIST—DRAWING REQUIRED
● DENOTES MANUFACTURE DISCONTINUED
■ DENOTES MANUFACTURE LIMITED
AP DENOTES APPARATUS BOOK DRAWINGS

DIMENSIONS UP TO AND INCLUDING 72 INCHES EXPRESSED IN INCHES. NON-LIMITED DIMENSIONS, OTHER THAN SIZE OF RAW MATERIAL, SHALL BE HELD WITHIN FRACTIONAL ; DECIMAL

DWG SIZE 6S

FOR CHARGES REFER TO DRAFTING DRG. CARD INDEX

610A TEL. SET	

610A, A1 & A2 TEL. SET WIRING DIAGRAM

SCALE

WESTERN ELECTRIC CO. INC

SUPERSEDES ISS-1 A-579201

OLD SDS A-579201

OLD A-579201