FOR GEN INFO ON SYMBOLS AND NOTES
REFER TO MFG STD 16003 PART 2 SECT 227

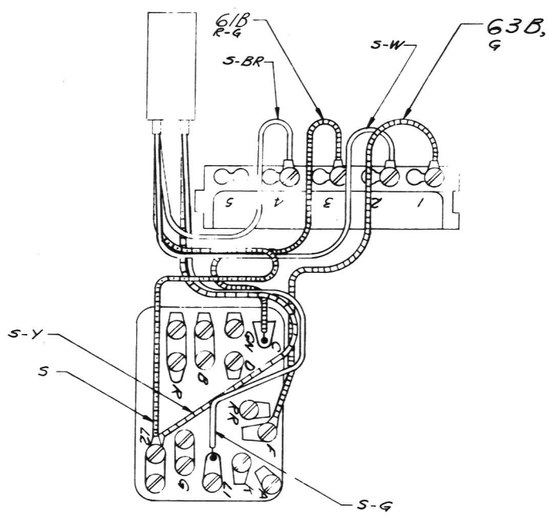

FIG. 1

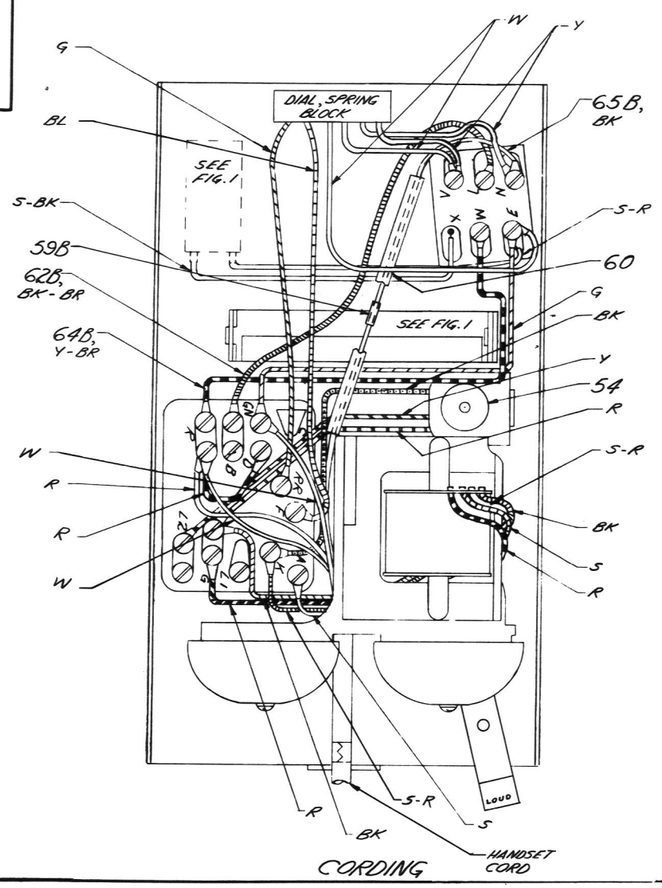

CORDING

P-11E908 559 BRW TEL SET ISSUE 1

WIRING DIAGRAM

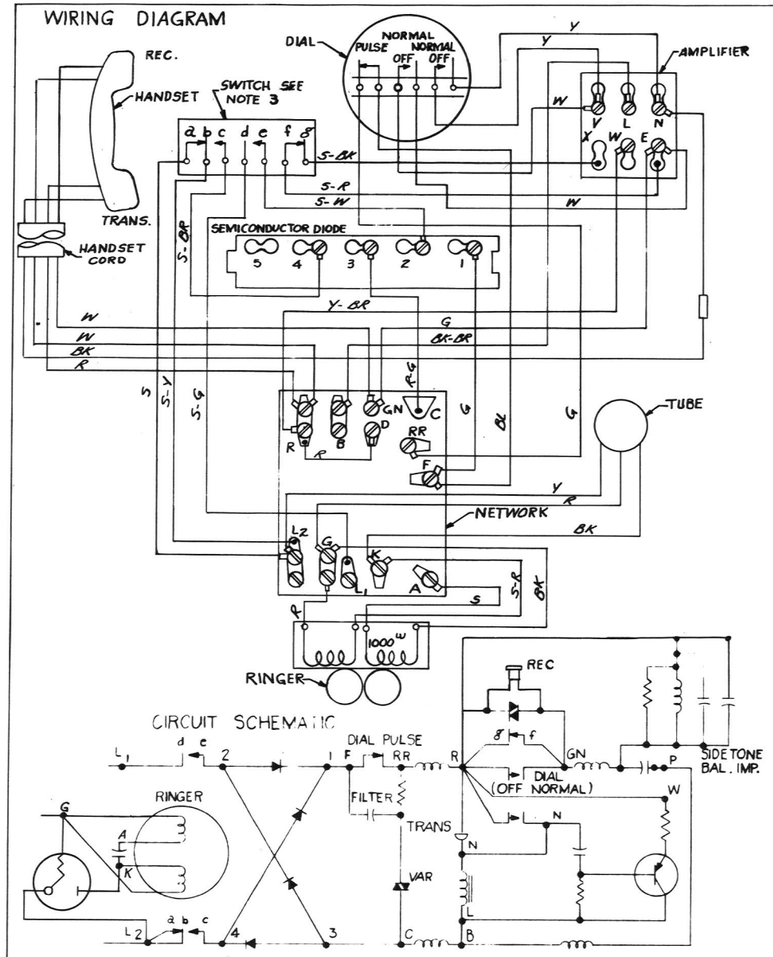

CIRCUIT SCHEMATIC

TABLE OF CONNECTIONS

POLARIZED RINGING PARTY LINES

CLASS OF SERVICE	CONNECTIONS IN SET									
		LINE			RINGER				TUBE	
	RING	TIP	GND	R	BK	S	S -R	Y	BK	R
TIP +	L1	L2	G	L2	L2	A	K	G	K	L2
TIP -	L1	L2	G	G	G	A	K	L2	K	G
RING +	L2	L1	G	L2	L2	A	K	G	K	L2
RING -	L2	L1	G	G	G	A	K	L2	K	G

NOTES:

1. FOR MANUAL SERVICE:
   REPLACE DIAL WITH APPARATUS BLANK AND TRANSFER SLATE-WHITE SWITCH LEAD TO (RR) TERMINAL ON NETWORK.
2. RINGER CUT-OFF CONTROL BY CUSTOMER:
   BEND STOP NEXT TO DETENT ON RINGER VOLUME CONTROL SO THAT IT COMPLETELY CLEARS THE RIM OF THE RINGER FRAME. THIS PROVIDES A FURTHER POSITION ON VOLUME CONTROL WHICH PREVENTS ARMATURE MOVEMENT.
3. WHEN THE HANDSET IS REMOVED FROM THE HOOK, CONTACT gf BREAKS LAST.
4. WHEN SET IS INSTALLED ON LOOPS RESULTING IN UNUSUALLY HIGH SIDE TONE, TRANSFER RED LEAD FROM (D) TERMINAL TO (R) TERMINAL.

PRINTED IN U.S.A.

PRINT BLACK

NOTES:

1. IN WIRING DIAGRAM, CONNECTIONS LABELED • SHALL BE SOLDERED PER 50016, METHOD C.
2. SET TO BE WIRED AS SHOWN IN WIRING DIAGRAM (RING PARTY, TIP PARTY EXCEPT DIAL MESSAGE RATE).
3. SEE STOCK LIST A-579258 FOR INFORMATION CONCERNING LEADS, ITEM 61B, 62B, 63B, 64B, 65B, ALSO ITEMS 54, 59B, AND 60.

CODE	WIRING DIAGRAM AND CIRCUIT SCHEMATIC SAME AS FOR
559 BR TYPE	559 BRW

MATERIAL FOR P-11E908

WHITE SULPHITE BOND PAPER 20 LB. (500 SHEETS 17 X 22)

REQ	IDENTIFICATION NO.	DESCRIPTION	REF DESIG	NOTE	ITEM

STOCK LIST

SUPPLEMENTARY DRAWINGS

SIGNIFICANCE OF SYMBOLS AND ITEM NUMBER SUFFIXES

B—PARTIAL ASSEMBLIES OR OTHER DRAWINGS WITH STOCK LISTS
D—PARTS SHIPPED LOOSE
} ITEMS NOT SPECIFIED AS "B" OR "D" PARTS IN ITEM COLUMN ARE INDIVIDUAL ("A") PARTS.

WHERE ITEMS HAVE REFERENCE DESIGNATIONS, THEY MAY BE USED IN LIEU OF ITEM NUMBERS ON THE DELINEATION.

✓ IN "REQ" COLUMN OF STOCK LIST—QUANTITY AS REQUIRED
✓ IN "REQ" COLUMN OF SUPPLEMENTARY DWG LIST—DRAWING REQUIRED
● DENOTES MANUFACTURE DISCONTINUED
■ DENOTES MANUFACTURE LIMITED
AS—DENOTES APPARATUS BOOK DRAWINGS

DIMENSIONS UP TO AND INCLUDING 75 INCHES EXPRESSED IN INCHES. NON-LIMITED DIMENSIONS, OTHER THAN SIZE OF RAW MATERIAL, SHALL BE HELD WITHIN FRACTIONAL DECIMAL.

DWG SIZE 6S

559 TYPE REL. SECT. A-579258
USED ON BRW

559 TYPE TELEPHONE SETS CORDING, WIRING DIAGRAM, SCHEMATIC & CIRCUIT LABEL P-11E908

SCALE NONE

WESTERN ELECTRIC CO, INC

CDS

A-579261

A-579261