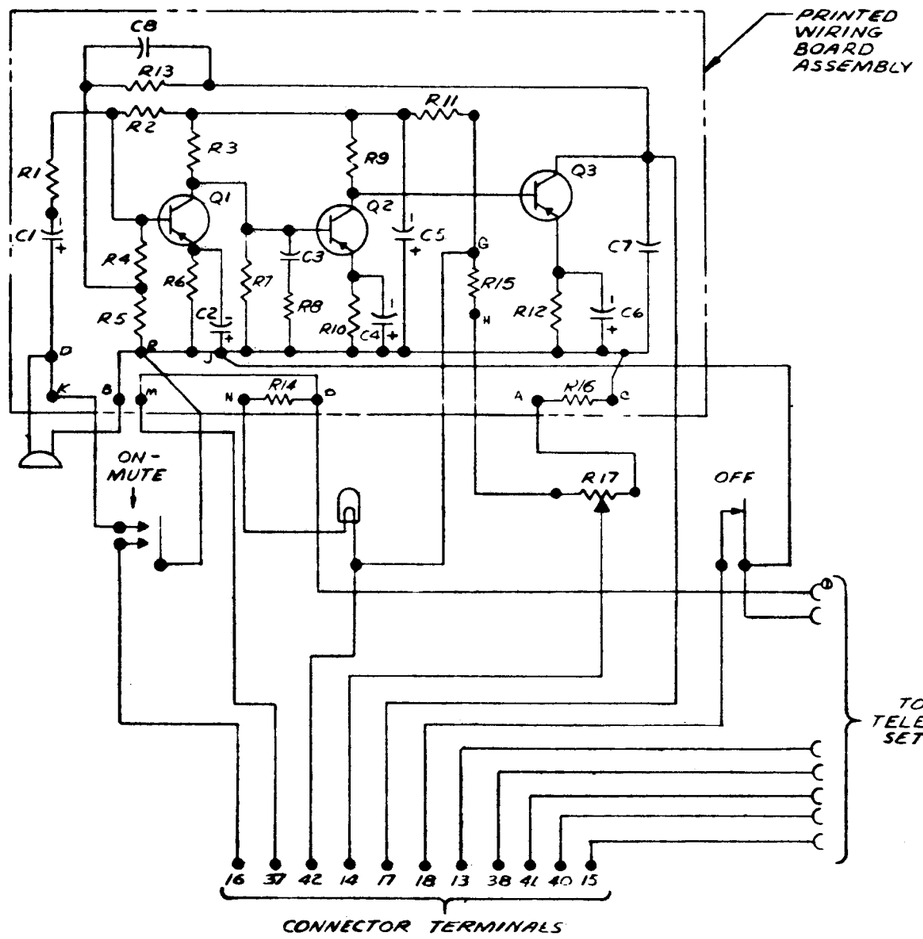

SCHEMATIC

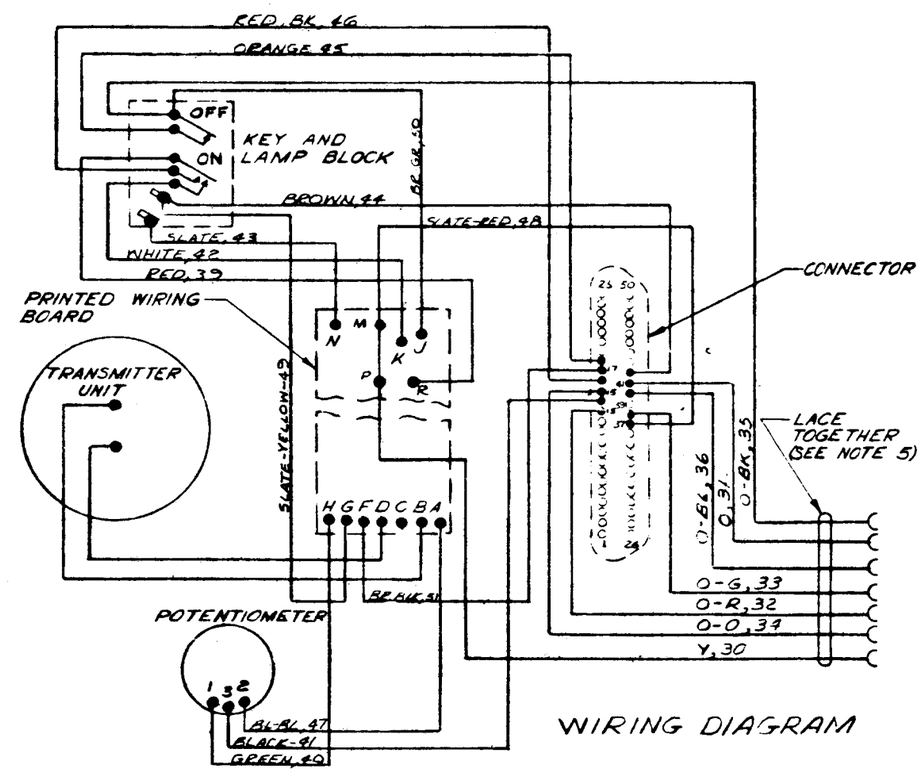

WIRING DIAGRAM

NOTES:

1. ITEM NUMBERS REFERRED TO ARE SHOWN IN STOCK LIST OF ASSEMBLY DRAWING A-579405.
2. ALL SOLDERING SHALL BE IN ACCORDANCE WITH WE 50016 METHOD L.
3. SEE DESIGN STANDARDS BOOK 1 FOR BTL REQUIREMENTS CORRESPONDING TO WE SPECIFICATIONS.
4. REFERENCE DESIGNATIONS SHOWN INSIDE OF PHANTOM LINES ARE SHOWN ON PRINTED WIRING BOARD ASSEMBLY.
5. LACE CONDUCTORS INDICATED FOR 6 INCHES USING LACING TAPE, ITEM 37.

DIMENSIONS UP TO AND INCLUDING 72 INCHES EXPRESSED IN INCHES NON-LIMITED DIMENSIONS OTHER THAN SIZE OF RAW MATERIAL SHALL BE HELD WITHIN FRACTIONAL DECIMAL

SIZE 4S

667A XMTR

A-579404

ISSUE-1 3-1-60
ON SCHEMATIC: ADDED TERM. DESIG. D, K, B, M, R, J, N, P, G, H, A, & C. REMOVED LEADS BETWEEN R & M, R & P, M & MUTE SW., 37 & MUTE SW., P & C, C & SPADE LUG ⊖. ADDED LEADS BETWEEN R & MUTE SW., J & MUTE SW., M & 37, M & P, P & SPADE LUG ⊖, C & C6 CHANGED WIRING DIAGRAM TO AGREE WITH SCHEMATIC.

DRAWN DAL
ENGR WECO
ENGR BTL
ISSUE-2 7-1-60

667A XMTR A-579405
USED ON DWG

667A TRANSMITTER WIRING DIAGRAM & SCHEMATIC

SCALE ~

WESTERN ELECTRIC CO., INC
ENGINEER OF MANUFACTURE

CDS

A-579404