NOTES:

1. STAMP DATE OF MANUFACTURING PER A-701270, FIGURE 2.
2. PART CONTAINS CODED ITEMS.
3. L1 SHALL NOT EXTEND OVER EDGE OF PRINTED WIRING BOARD.

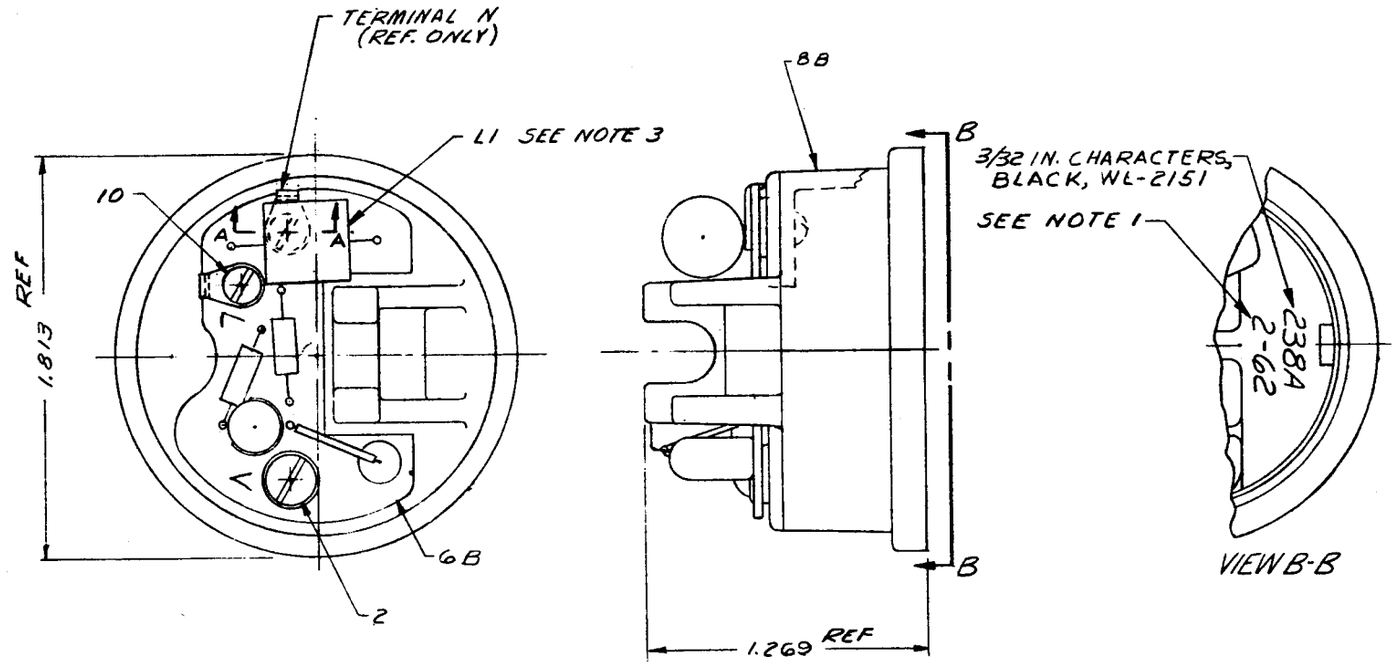

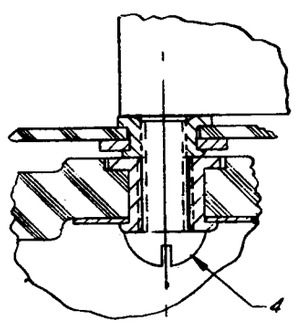

SECT. A-A
SCALE 4/1

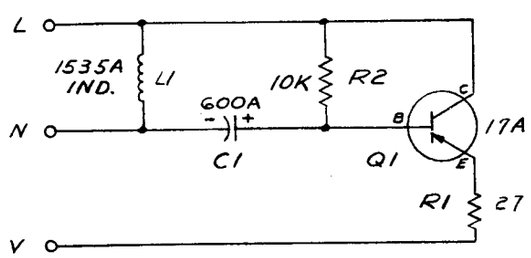

SCHEMATIC

REQ	IDENTIFICATION NO.	DESCRIPTION	REF DESIG	NOTE	ITEM
1	P-43A939	SCREW, B.H.M.			10
					9
1	P-24E033	CUP ASSEMBLY			8B
					7
1	P-15E435	BOARD, PRINTED WIRING ASSEM.		2	6B
					5
1	P-180864	SCREW, B.H.M.			4
					3
1	P-181161	SCREW, B.H.M			2
					1

STOCK LIST

✓	A-579805	REQUIREMENTS

SUPPLEMENTARY DRAWINGS

SIGNIFICANCE OF SYMBOLS AND ITEM NUMBER SUFFIXES

B—PARTIAL ASSEMBLIES OR OTHER DRAWINGS WITH STOCK LISTS
D—PARTS SHIPPED LOOSE
} ITEMS NOT SPECIFIED AS "B" OR "D" PARTS IN ITEM COLUMN ARE INDIVIDUAL ("A") PARTS.

WHERE ITEMS HAVE REFERENCE DESIGNATIONS, THEY MAY BE USED IN LIEU OF ITEM NUMBERS ON THE DELINEATION.

✓ IN "REQ" COLUMN OF STOCK LIST—QUANTITY AS REQUIRED
✓ IN "REQ" COLUMN OF SUPPLEMENTARY DWG LIST—DRAWING REQUIRED
● DENOTES MANUFACTURE DISCONTINUED
■ DENOTES MANUFACTURE LIMITED
AS—DENOTES APPARATUS BOOK DRAWINGS

DIMENSIONS UP TO AND INCLUDING 72 INCHES EXPRESSED IN INCHES. NON-LIMITED DIMENSIONS, OTHER THAN SIZE OF RAW MATERIAL, SHALL BE HELD WITHIN FRACTIONAL DECIMAL

DWG SIZE 3S

A-579796	
ENGR K.E. VERLES	K.E.V. KEV
DRAWN K.G. KLIER	
ISSUE 1 3-6-62	JPM
RGK	KSH
	JPM
ISSUE 2 3-9-62	
DRAWN	RLW
ENGR WIRED	
ENGR BTL	
ISSUE-1 4-13-62	

ISSUE A-579796

USED ON | DWG

238A AMPLIFIER ASSEMBLY & SCHEMATIC

SCALE 2/1 & AS SHOWN

WESTERN ELECTRIC CO, INC
ENGINEER OF MANUFACTURE

CDS A-579796