NOTES:

1. PART CONTAINS CODED ITEMS.
2. INSERT PROTRUDING PORTION OF BRACKET, ITEM 2, INTO TUBING, ITEM 7. HOLD LEADS AGAINST TUBING AND SECURELY TIE WITH LACING TAPE, ITEM 6.

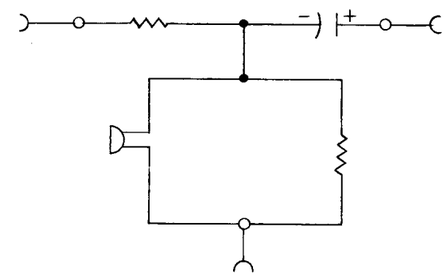

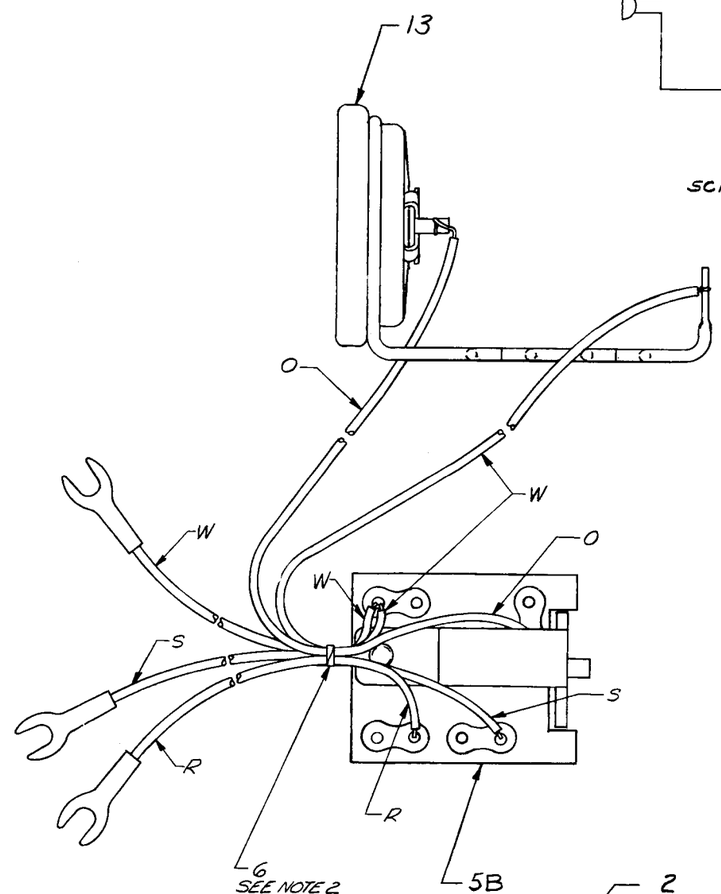

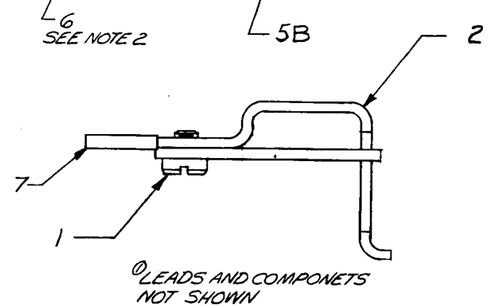

REQ	IDENTIFICATION NO.	DESCRIPTION	REF DESIG	NOTE	ITEM
1	N2	TRANSMITTER			14
2	P-24E282	GROMMET			10D
1	P-24E281	SCR, WASHER HM			9D
1	P-43A392	SCR, SPL F FILH M			8D
1		VARNISHED TUBING 3/32 I.D. x 3/8 LG.		2	7
✓	RM-623599	TAPE, LACING		2	6
1	P-24E420	BOARD, COMPONENT ASSEM		1	5B
1	P-24E078	BRACKET			2
1	P-180921	SCREW, BHM			1

STOCK LIST

SUPPLEMENTARY DRAWINGS

SIGNIFICANCE OF SYMBOLS AND ITEM NUMBER SUFFIXES

B—PARTIAL ASSEMBLIES ON OTHER DRAWINGS WITH STOCK LISTS
D—PARTS SHIPPED LOOSE
} ITEMS NOT SPECIFIED AS "B" OR "D" PARTS IN ITEM COLUMN ARE INDIVIDUAL ("A") PARTS

WHERE ITEMS HAVE REFERENCE DESIGNATIONS, THEY MAY BE USED IN LIEU OF ITEM NUMBERS ON THE DELINEATION.
✓ IN "REQ" COLUMN OF STOCK LIST—QUANTITY AS REQUIRED
✓ IN "REQ" COLUMN OF SUPPLEMENTARY DWG LIST DRAWING REQUIRED
● DENOTES MANUFACTURE DISCONTINUED
■ DENOTES MANUFACTURE LIMITED
AB—DENOTES APPARATUS BOOK DRAWINGS

UNLESS OTHERWISE SPECIFIED, ALL DIMENSIONS ARE IN INCHES. NONLIMITED DIMENSIONS OTHER THAN SIZE OF RAW MATERIAL SHALL BE HELD AS FOLLOWS WHEN EXPRESSED:
TO 2 DECIMAL PLACES ± AS ANGLES ±
TO 3 DECIMAL PLACES ±

FOR GENERAL INFORMATION ON SYMBOLS AND NOTES REFER TO MANUFACTURING STANDARD 16,003, PART 2, SECTION 227.

DWG. SIZE 3 S

A-579886	
ENGR W.R.LINCH	7/20
DRAWN E.S.	
ISSUE 1 3-29-62	JPM
DRAWN RLW	
ENGR WECO	
6-15-62 ISSUE-1	
CHANGED: NO. REQ'D. OF ITEM 9D WAS 2.	
REM 442706-A1C	
8-20-62	2
ADDED: COLOR CODING TO LEADS OF ITEM 5B. CHANGED: PORTION OF SCHEMATIC WAS SPEC. & SHOWN THUS:	
L.E.REED 443031-B1C	
12-3-62	3
CHANGED: PICT TO AGREE WITH P-24E078, ISS-2. ADDED: ITEMS 6 & 7; NOTE 2 & ASSOC REFS (3 PLACES); INFO AT O.	
443151-B1	
1-7-63	4

ISSUE A-579886

USED ON DWG

664B TRANSMITTER ASSEMBLY

SCALE 2/1

WESTERN ELECTRIC CO. INC.
ENGINEER OF MANUFACTURE

CDS

A-579886