NOTES:

1. ALL SOLDERING SHALL BE DONE IN ACCORDANCE WITH 50016, METHOD C.
2. PT - LEADS FURNISHED WITH COMPONENT
3. ITEM NUMBERS REFERRED TO ARE SHOWN IN STOCK LIST OF ASSEMBLY, A-579937.

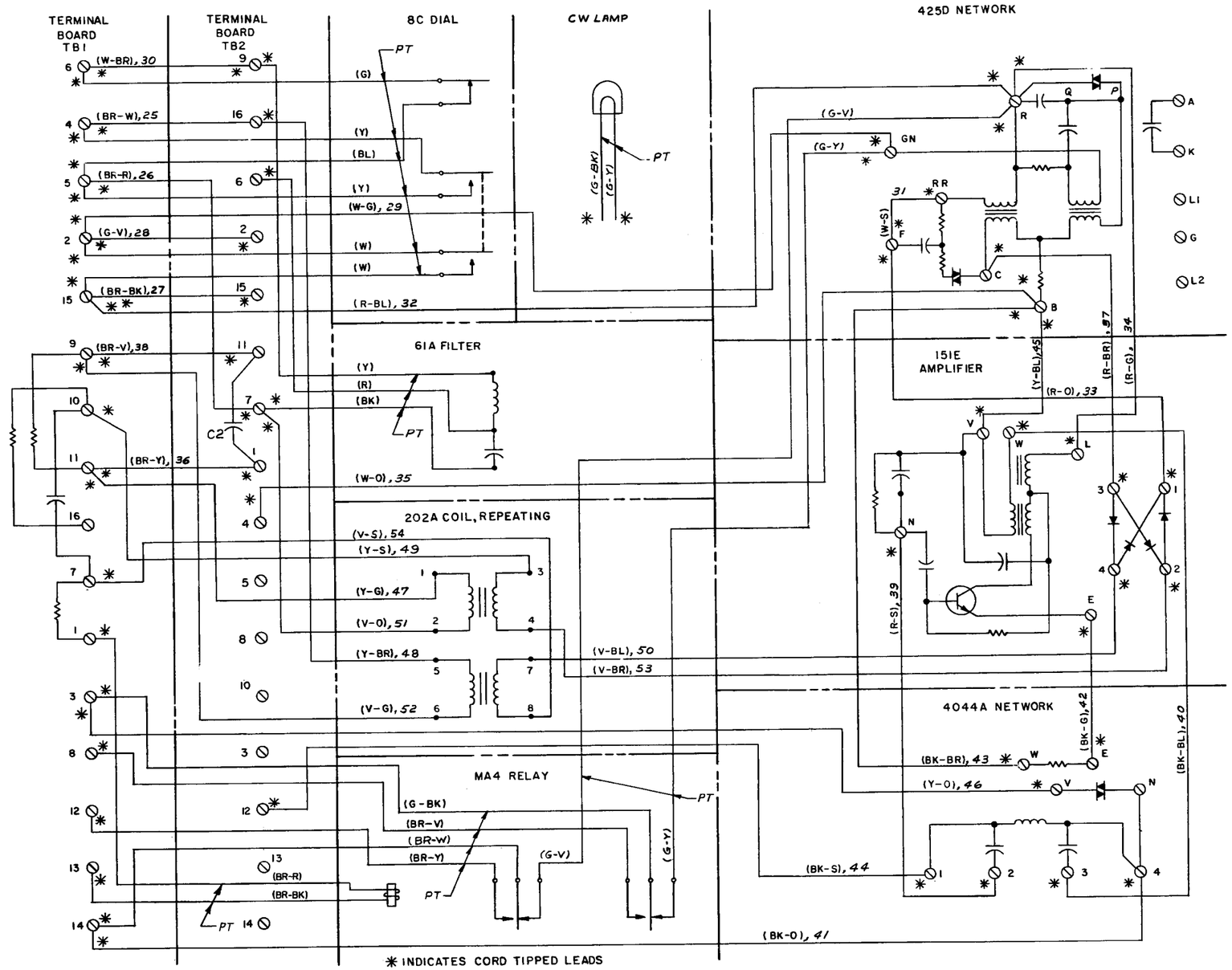

* INDICATES CORD TIPPED LEADS

REQ	IDENTIFICATION NO.	DESCRIPTION	REF DESIG	NOTE	ITEM

STOCK LIST

SUPPLEMENTARY DRAWINGS

SIGNIFICANCE OF SYMBOLS AND ITEM NUMBER SUFFIXES

B—PARTIAL ASSEMBLIES OR OTHER DRAWINGS WITH STOCK LISTS
D—PARTS SHIPPED LOOSE
} ITEMS NOT SPECIFIED AS "B" OR "D" PARTS IN ITEM COLUMN ARE INDIVIDUAL ("A") PARTS.

WHERE ITEMS HAVE REFERENCE DESIGNATIONS, THEY MAY BE USED IN LIEU OF ITEM NUMBERS ON THE DELINEATION.

✓ IN "REQ" COLUMN OF STOCK LIST—QUANTITY AS REQUIRED
✓ IN "REQ" COLUMN OF SUPPLEMENTARY DWG LIST—DRAWING REQUIRED
⊗ DENOTES MANUFACTURE DISCONTINUED
⊠ DENOTES MANUFACTURE LIMITED
AS—DENOTES APPARATUS BOOK DRAWINGS

DIMENSIONS UP TO AND INCLUDING 72 INCHES EXPRESSED IN INCHES. NON-LIMITED DIMENSIONS, OTHER THAN SIZE OF RAW MATERIAL, SHALL BE HELD WITHIN FRACTIONAL DECIMAL

DWG SIZE 6S

A-580092

A-580092

ISSUE: 1L

DEPT R141

DR. L. SIDNER

CK. F. ROSCOS

APPD. J. J.

6-21-63 ISSUE-1

14 TYPE APPARATUS UNIT CONNECTING DIAGRAM

SCALE ~

WESTERN ELECTRIC CO. INC. ENGINEER OF MANUFACTURE

~~BELL TELEPHONE LABORATORIES~~

CDS A-580092