NOTES:

1. WHEN A 617A KEY IS PART OF THE TELEPHONE SET, ATTACH THE SPADE-TIPPED CONDUCTOR OF THIS KEY TO THE SG TERMINAL ON THE MOUNTING CORD TERMINAL STRIP. REMOVE THE SPADE-TIPPED STRAP FROM THE CG OR 2A TERMINAL ON THE STRIP.
2. DEAD DRESS THESE SPADE TIPPED LEADS PER A-580071-39 AND STORE.

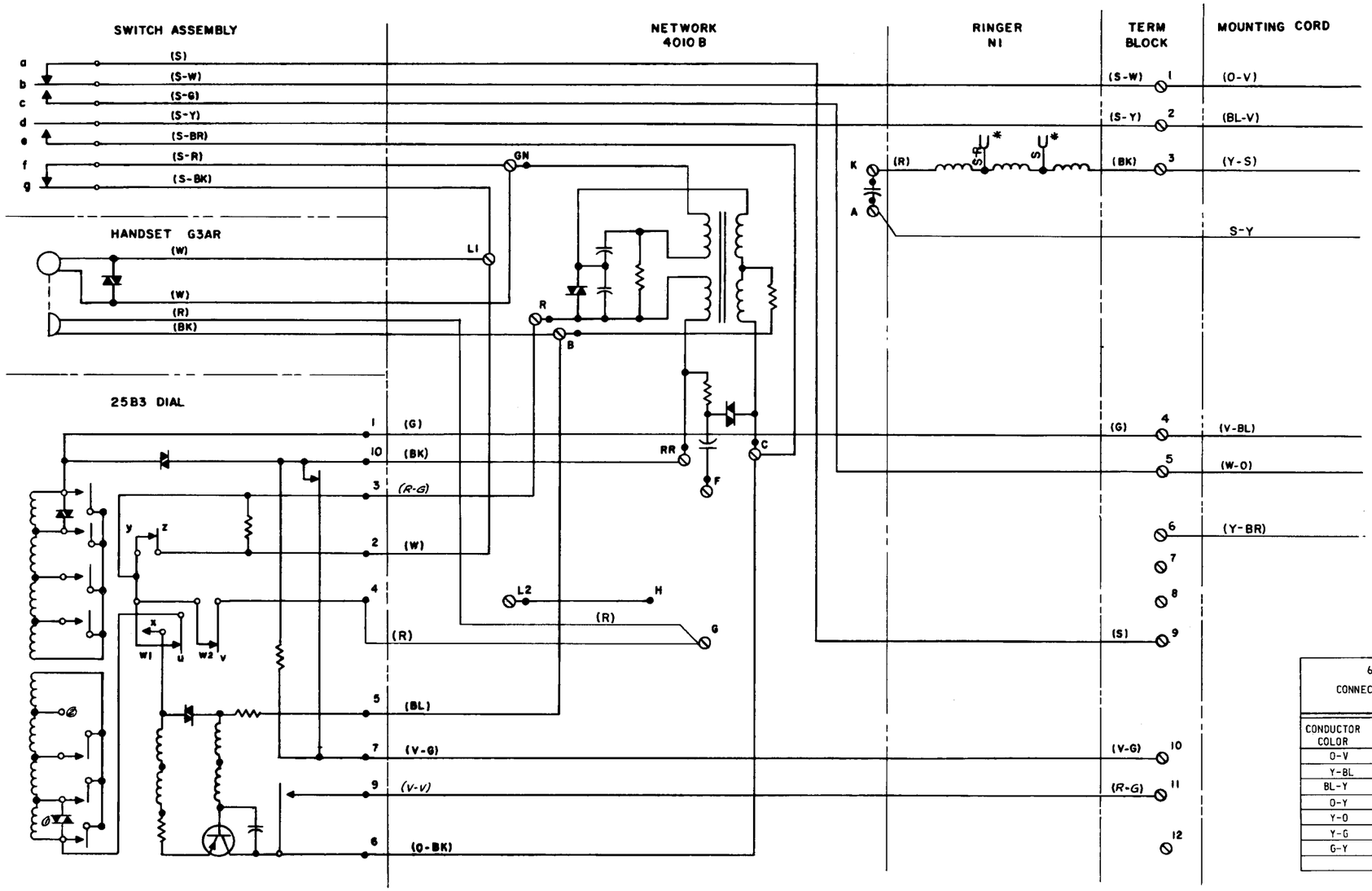

667B TRANSMITTER CONNECTIONS TO TELEPHONE SET		
CONDUCTOR COLOR	TERMINATION	
O-V	TERM 1	TB1
Y-BL	TERM 10	TB1
BL-Y	TERM 2	TB1
O-Y	TERM 5	TB1
Y-O	TERM 9	TB1
Y-G	TERM 11	TB1
G-Y	TERM 12	TB1

* INSULATE AND STORE

A-580119
3-6-63 ISSUE-1
CHANGED: DIV LINE BET. RING. & NET. MAS LOC VERT. BET. TERM. C & TERM. A & K
FROM 591454-A1C
6-27-63 2
CHANGED: BK & R-G LEADS FROM 25B3 DIAL WERE BK-BK & V-V RESP
FROM 591522-A1
8-8-63 3
CHANGED: R-G & V-V DIAL LEADS WERE R-R & R-G RESP. ADDED: AT DIAL VAR AT ⓪. REMOVED: AT DIAL, SW CONT AT ⓪.
FROM 591727-B1
12-19-63 4

A-580119

USED ON	DWG
1630 & 1631 TEL SET	A-580104

1630 & 1631 TYPE TELEPHONE SET CONNECTING DIAGRAM

SCALE NONE

WESTERN ELECTRIC CO. INC. ENGINEER OF MANUFACTURE

MATERIAL | FINISH

UNLESS OTHERWISE SPECIFIED, ALL DIMENSIONS ARE IN INCHES. NONLIMITED DIMENSIONS OTHER THAN SIZE OF RAW MATERIAL SHALL BE HELD AS FOLLOWS WHEN EXPRESSED:
TO 2 DECIMAL PLACES ±
TO 3 DECIMAL PLACES ±
AS ANGLES ±
FOR GENERAL INFORMATION ON SYMBOLS AND NOTES REFER TO MANUFACTURING STANDARD 10.003, PART 2, SECTION 227.

DWG SIZE 6S

CDS A-580119