NOTES: (CONTINUED)

8. COMPONENT REFERENCE DESIGNATIONS C1, R1, R2 ETC. ARE FOR REFERENCE ONLY AND SHALL NOT BE STAMPED ON THE COMPONENTS.

NOTES:

1. - - - - PRINTED WIRING PATHS.
2. RUBBER STAMP DATE OF MANUFACTURE PER A-701270 FIG. 2, 1/8 INCH CHARACTERS, WL-2151. LOCATE APPROX. AS SHOWN.
3. ALL SOLDERING SHALL BE DONE IN ACCORDANCE WITH 50016, METHOD L.
4. ALL COMPONENTS SHALL BE MOUNTED AS SHOWN TERMINAL LENGTH SHALL BE AS SHORT AND DIRECT AS POSSIBLE BUT SHALL NOT BE LESS THAN 0.188 INCH. DRESS TERMINAL TO AVOID SHORTING.
5. TRANSISTOR CONNECTING PRECAUTIONS: DURING SOLDERING CARE MUST BE TAKEN TO AVOID DAMAGE TO THE UNIT. HOWEVER THE SPECIFIC MAXIMUM TEMPERATURE OF 85°C MAY BE EXCEEDED PROVIDED THE TEMPERATURE OF THE BASE LEAD MEASURED APPROXIMATELY 0.050 INCH FROM THE GLASS SEAL AS MEASURED WITH A 0.010 INCH IRON CONSTANTAN THERMOCOUPLE DOES NOT EXCEED 245°C FOR MORE THAN 10 SECONDS. BEFORE AND AFTER THIS 10 SECOND PERIOD, THE UNIT MUST BE EXPOSED TO A ROOM AMBIENT NOT EXCEEDING 45°C. NO BENDS SHOULD BE MADE IN THE LEADS CLOSER THAN 0.050 INCH TO THE BODY OF TRANSISTOR.
6. CHARACTERS SHALL BE 1/8 INCH, BLACK WL-2151.

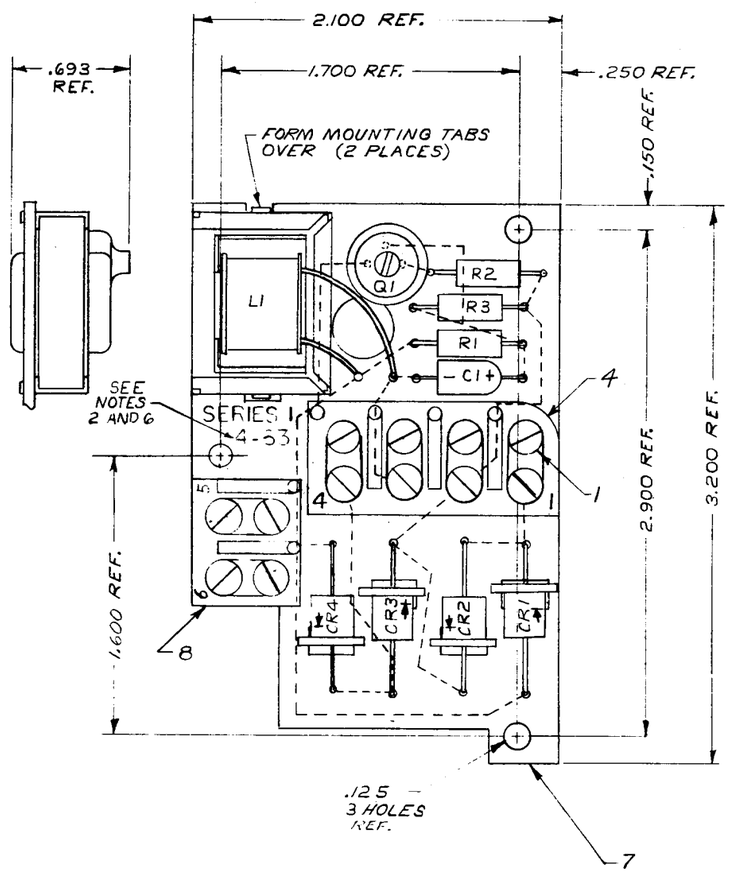

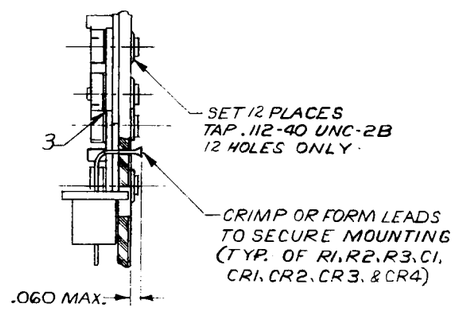

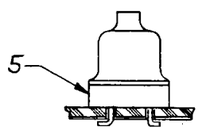

FIG. 1
MOUNTING FOR TRANSISTOR (Q1)

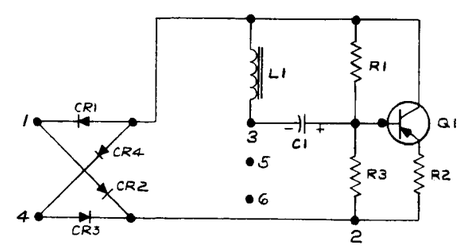

SCHEMATIC

REQ	IDENTIFICATION NO.	DESCRIPTION	REF DESIG	NOTE	ITEM
1	12D	TRANSISTOR	Q1		25
1	RM-744669	RESISTOR 1.0 K	R3		23
1	RM-749250	RESISTOR 22Ω	R2		22
1	RM-749251	RESISTOR 3.3 K	R1		21
1	1618B	INDUCTOR	L1		19
4	RM-767865	DIODE KS-15724, L1	CR4, CR3, CR2, CR1		17, 16, 15, 14
1	600A	CAPACITOR 1UF	C1		12
1	P-26E649	BLOCK, TERMINAL			8
1	P-26E615	BOARD, PRINTED WIRING			7
1	P-19A013	SPACER			5
1	P-14E852	BLOCK, TERMINAL			4
6	P-298093	EYELET, TWIN			3
12	P-180922	SCREW, B H M .112-40 X 3/16			1

STOCK LIST

✓	A-580161 REQUIREMENTS
✓	AA-610.012 BELL SYSTEM PRACTICES

SUPPLEMENTARY DRAWINGS

SIGNIFICANCE OF SYMBOLS AND ITEM NUMBER SUFFIXES

B—PARTIAL ASSEMBLIES ON OTHER DRAWINGS WITH STOCK LISTS } ITEMS NOT SPECIFIED AS "B" OR "D" PARTS IN ITEM COLUMN ARE INDIVIDUAL ("A") PARTS

D—PARTS SHIPPED LOOSE

WHERE ITEMS HAVE REFERENCE DESIGNATIONS, THEY MAY BE USED IN LIEU OF ITEM NUMBERS ON THE DELINEATION.

✓ IN "REQ" COLUMN OF STOCK LIST—QUANTITY AS REQUIRED

✓ IN "REQ" COLUMN OF SUPPLEMENTARY DWG LIST DRAWING REQUIRED

● DENOTES MANUFACTURE DISCONTINUED

■ DENOTES MANUFACTURE LIMITED

AB DENOTES APPARATUS BOOK DRAWINGS

UNLESS OTHERWISE SPECIFIED, ALL DIMENSIONS ARE IN INCHES. NONLIMITED DIMENSIONS OTHER THAN SIZE OF RAW MATERIAL SHALL BE HELD AS FOLLOWS WHEN EXPRESSED:

TO 2 DECIMAL PLACES ± AS ANGLES ±

TO 3 DECIMAL PLACES ±

FOR GENERAL INFORMATION ON SYMBOLS AND NOTES REFER TO MANUFACTURING STANDARD 16.003, PART 2, SECTION 227

241A

DWG SIZE 4 S

CDS A-580160

A-580160

ENGR. W.E. KROSNAN
DRAWN R.L. RYAN
SPEC 63 ISSUE 1L
DRAWN TLF
ENGR. WECO
ENGR. BTL
5-20-63 ISSUE-1 CHANGED: RM-749251 FOR R1 WAS RM-749252; CR3 IN SCHEMATIC WAS CR1. ADDED: AA-610.012 TO SUPPLEMENTARY DWG.
REM 591641-B1
11-11-63 TR 2

ISSUE A-580160

USED ON DWG

241A AMPLIFIER ASSEMBLY

SCALE 2/1

WESTERN ELECTRIC CO. INC
ENGINEER OF MANUFACTURE