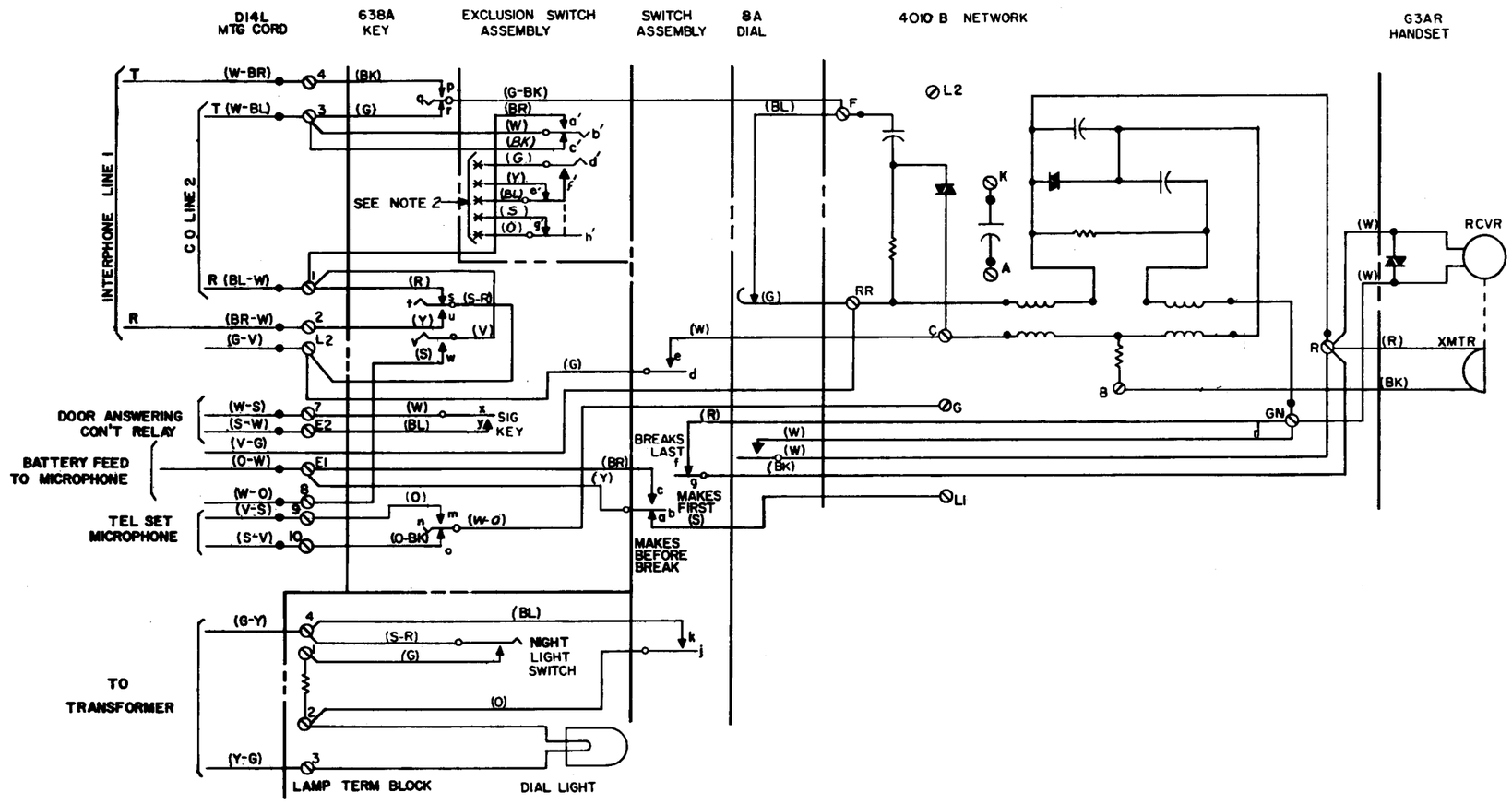

NOTES:

1. WIRING ORDER SHALL BE SUCH THAT CORDS CAN BE REMOVED WITH MINIMUM DISTURBANCE TO OTHER WIRING. SPACE BETWEEN DIAL BRACKET UPRIGHTS SHALL BE LEFT FREE FROM WIRING. WIRING SHALL BE SO ARRANGED THAT THERE IS NO POSSIBLE INTERFERENCE WITH ACTION OF SWITCHES, KEYS AND DIAL.
2. INSULATOR AT UNUSED SPADE TIPS DESIGNATED BY ASTERISK (*) IS SHOWN IN STOCK LIST OF ASSEMBLY DRAWING A-580148.

A-580166

R.T. FOLK	DRF	
DRAWN R.E. LISTER	CHK	
6-6-63	WRK	1
CHANGED: TO AGREE WITH ISS. 3, R246204, & ISS. 4, F246225.		
REF 591709-AIC		
11-6-63		2
CHANGED: LEAD TO G TERM. OF 4010 B NET. WAS O-W		
DEO 591833-AIC		
CHANGED: IN EXCLUSION SW ASSEM. COLORS FOR LEADS b' THRU h' WERE RESP O, K, BL, G, R, G-Y, W; CONTACTS a' & f' WERE REVERSED.		
DEO 591832-AIC		
CHANGED: COLOR OF (O), (Y), (BK), (R) & (W) LEADS FROM SW ASSEM WERE RESP (O-W), (SL-Y), (SL-BK), (SL-R), & (SL-W); CONTACT (W) LEAD ON 8A DIAL WAS SHOWN CLOSED.		
DEO 591839-AIC		
3-4-64		3

A-580166

712B TEL SET	A-580148
USED ON	DWG

7128 TELEPHONE SET CONNECTING DIAGRAM

SCALE ~

WESTERN ELECTRIC CO. INC. ENGINEER OF MANUFACTURE

UNLESS OTHERWISE SPECIFIED, ALL DIMENSIONS ARE IN INCHES. NON-LIMITED DIMENSIONS OTHER THAN SIZE OF RAW MATERIAL SHALL BE HELD AS FOLLOWS WHEN EXPRESSED:
TO 3 DECIMAL PLACES ± AS ANGLES ±
TO 2 DECIMAL PLACES ±
FOR GENERAL INFORMATION ON SYMBOLS AND NOTES REFER TO MANUFACTURING STANDARD 16.003, PART 2, SECTION 237.

6S

C D S A-580166