NOTES:

1. ITEM NUMBERS REFERRED TO ARE SHOWN ON P-85C000-999.

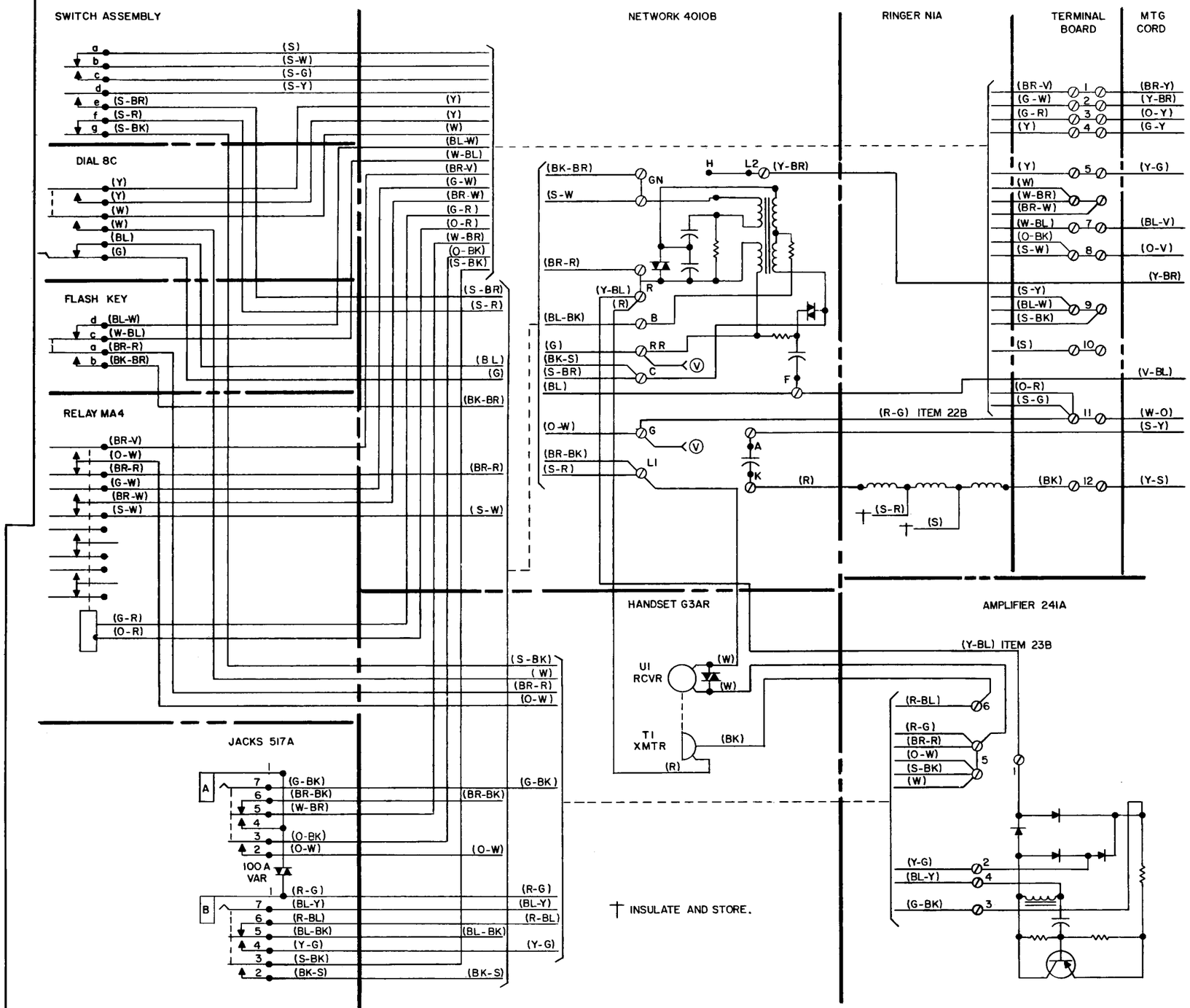

A-580168

ENGR. E.K. INGLAND	DATE 5-23-63	
DRAWN C.J. CAMPBELL		
5-23-63	ISSUE 1L	
DRAWN C.J.C.	TL F	
ENGR. CHECK	JAG	
5-23-63	ISSUE-1	
CHANGED: O-BK LEAD FROM S17A JACK MAS 1-0		
W.R.B.	591522-A1	
8-8-63	2	

USED ON	DWG
608B Tel Set	A-580125
608C TEL SET	A-580125

608C & 618B CONNECTING DIAGRAM

SCALE ~

WESTERN ELECTRIC CO. INC. ENGINEER OF MANUFACTURE

DWG SIZE 6S

CDS A-580168

A-580168