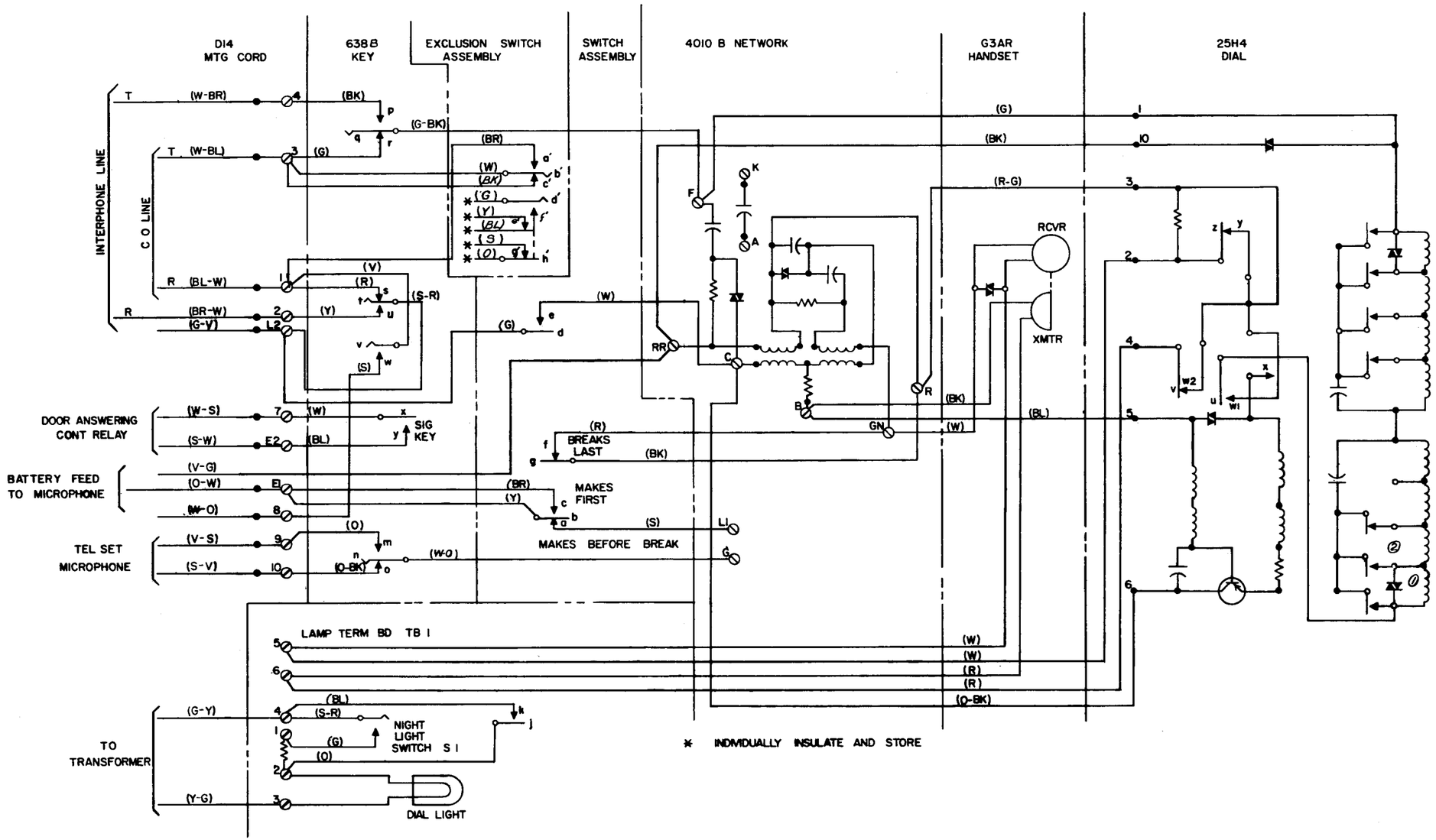

NOTES:

1. WIRING ORDER SHALL BE SUCH THAT CORDS CAN BE REMOVED WITH MINIMUM DISTURBANCE TO OTHER WIRING. SPACE BETWEEN DIAL BRACKET UPRIGHTS SHALL BE LEFT FREE FROM WIRING. WIRING SHALL BE SO ARRANGED THAT THERE IS NO POSSIBLE INTERFERENCE WITH ACTION OF SWITCHES, KEYS AND DIAL.
2. INSULATOR AT UNUSED SPADE TIPS DESIGNATED BY ASTERISK (*) IS SHOWN IN STOCK LIST OF ASSEMBLY DRAWING A-580148.

A-580178

6-27-63 ISSUE-1

CHANGED: TO AGREE WITH ISS.3, P-24E201, & ISS.4, P-24E225.

591709-A1C

11-6-63 2

CHANGED: 638B PORTION WAS 638A; LEAD TO G TERM OF 4010 B NET. WAS O-W

591833-A1C

CHANGED: IN EXCLUSION SW ASSEM, COLORS FOR LEADS 6' THRU 6' WERE RESP O, Y, BL, O, R, G-Y, W; CONTACTS e' & f' WERE REVERSED.

591832-A1C

CHANGED: COLOR OF (17) LEAD FROM TERM 2 OF LAMP TERM BD WAS (O-W); COLOR OF (17), (BR), (R), & (W) LEADS FROM SW ASSEM WERE RESP (S-Y), (S-BR), (S-R), & (S-W). VARISTOR AT ⓪ OF 25H4 DIAL WAS AT ⓪

591839-A1C

3-4-64 3

USED ON	DWG
1712 B TEL SET	A-580149

1712 B TELEPHONE SET CONNECTING DIAGRAM

SCALE ~

WESTERN ELECTRIC CO. INC. ENGINEER OF MANUFACTURE

UNLESS OTHERWISE SPECIFIED, ALL DIMENSIONS ARE IN INCHES. NONLIMITED DIMENSIONS OTHER THAN SIZE OF RAW MATERIAL SHALL BE HELD AS FOLLOWS WHEN EXPRESSED:
TO 2 DECIMAL PLACES ± AS ANGLES ±
TO 3 DECIMAL PLACES ±
FOR GENERAL INFORMATION ON SYMBOLS AND NOTES REFER TO MANUFACTURING STANDARD 10.003, PART 2, SECTION 237.

SUPP DWG 6S

CDS A-580178