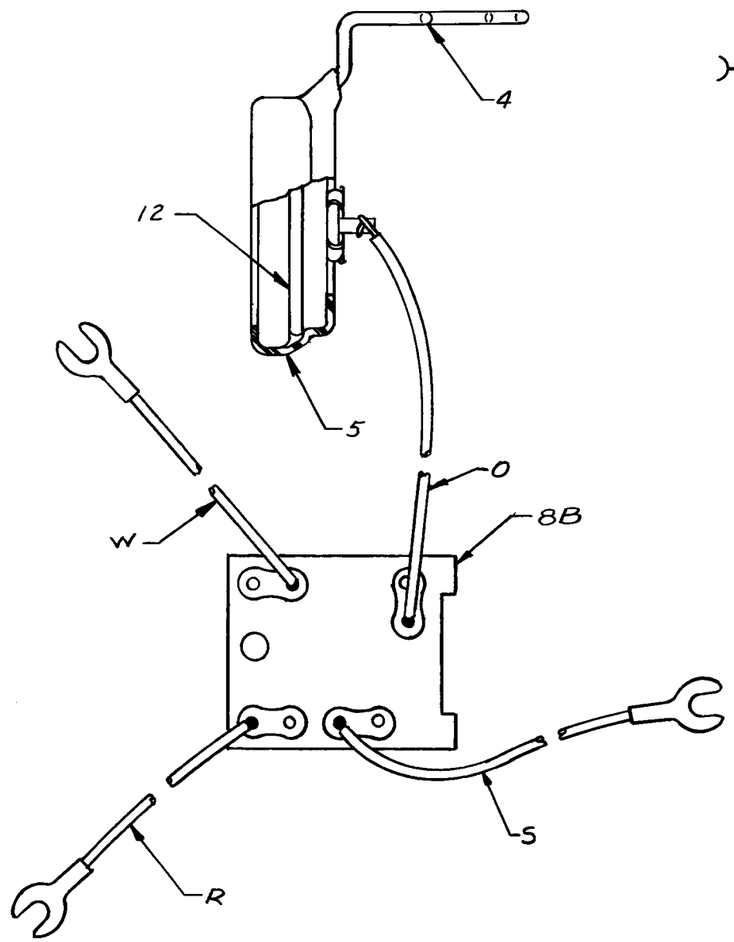

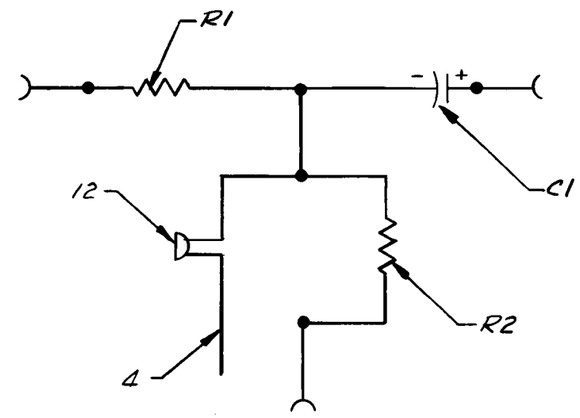

SCHEMATIC

REQ	IDENTIFICATION NO.	DESCRIPTION	REF DESIG	NOTE	ITEM
1	N2	TRANSMITTER			12
					11
1	P-180921	SCREW, BHM .112-40X 1/8			100
					9
1	P-26E684	BOARD, COMPONENT ASSY			8B
					7
					6
1	P-27E067	GASKET			5
1	P-27E066	BRACKET, TRANSMITTER			4
					3
					2
					1

STOCK LIST

SUPPLEMENTARY DRAWINGS

SIGNIFICANCE OF SYMBOLS AND ITEM NUMBER SUFFIXES

S—PARTIAL ASSEMBLIES ON OTHER DRAWINGS WITH STOCK LISTS
D—PARTS SHIPPED LOOSE
} ITEMS NOT SPECIFIED AS "S" OR "D" PARTS IN ITEM COLUMN ARE INDIVIDUAL ("A") PARTS

WHERE ITEMS HAVE REFERENCE DESIGNATIONS, THEY MAY BE USED IN LIEU OF ITEM NUMBERS ON THE DELINEATION.
✓ IN "REQ" COLUMN OF STOCK LIST—QUANTITY AS REQUIRED
✓ IN "REQ" COLUMN OF SUPPLEMENTARY DWG LIST DRAWING REQUIRED
● DENOTES MANUFACTURE DISCONTINUED
■ DENOTES MANUFACTURE LIMITED
AB—DENOTES APPARATUS BOOK DRAWINGS

UNLESS OTHERWISE SPECIFIED, ALL DIMENSIONS ARE IN INCHES. NONLIMITED DIMENSIONS OTHER THAN SIZE OF RAW MATERIAL SHALL BE HELD AS FOLLOWS WHEN EXPRESSED:
TO 2 DECIMAL PLACES ± AS ANGLES ±
TO 3 DECIMAL PLACES ±
FOR GENERAL INFORMATION ON SYMBOLS AND NOTES REFER TO MANUFACTURING STANDARD 16.003, PART 2, SECTION 227.

DWG. SIZE 3 S

A-580233

ENGR'G C.L. KRUMREICH
DRAWN R.K. LER
9-20-63 ISSUE 1L
DRAFTMAN AEO MLT
ENGR. WECO
ENGR. BTL AK
9-30-63 ISSUE-1

ISSUE A-580233

USED ON DWG

664 D TRANSMITTER ASSEMBLY & SCHEMATIC

SCALE 2/1

WESTERN ELECTRIC CO. INC.
ENGINEER OF MANUFACTURE

CDS A-580233