NOTES:

1. THESE LEADS SHALL BE DRESSED THROUGH LEAD RETAINER OPENING ON THE COIN HOPPER.
2. CONNECT LEAD ASSEMBLY, ITEM 29B ON A-580340, FROM G TERMINAL ON COIN RELAY TO GROUND SCREW, ITEM 17 ON A-580340.

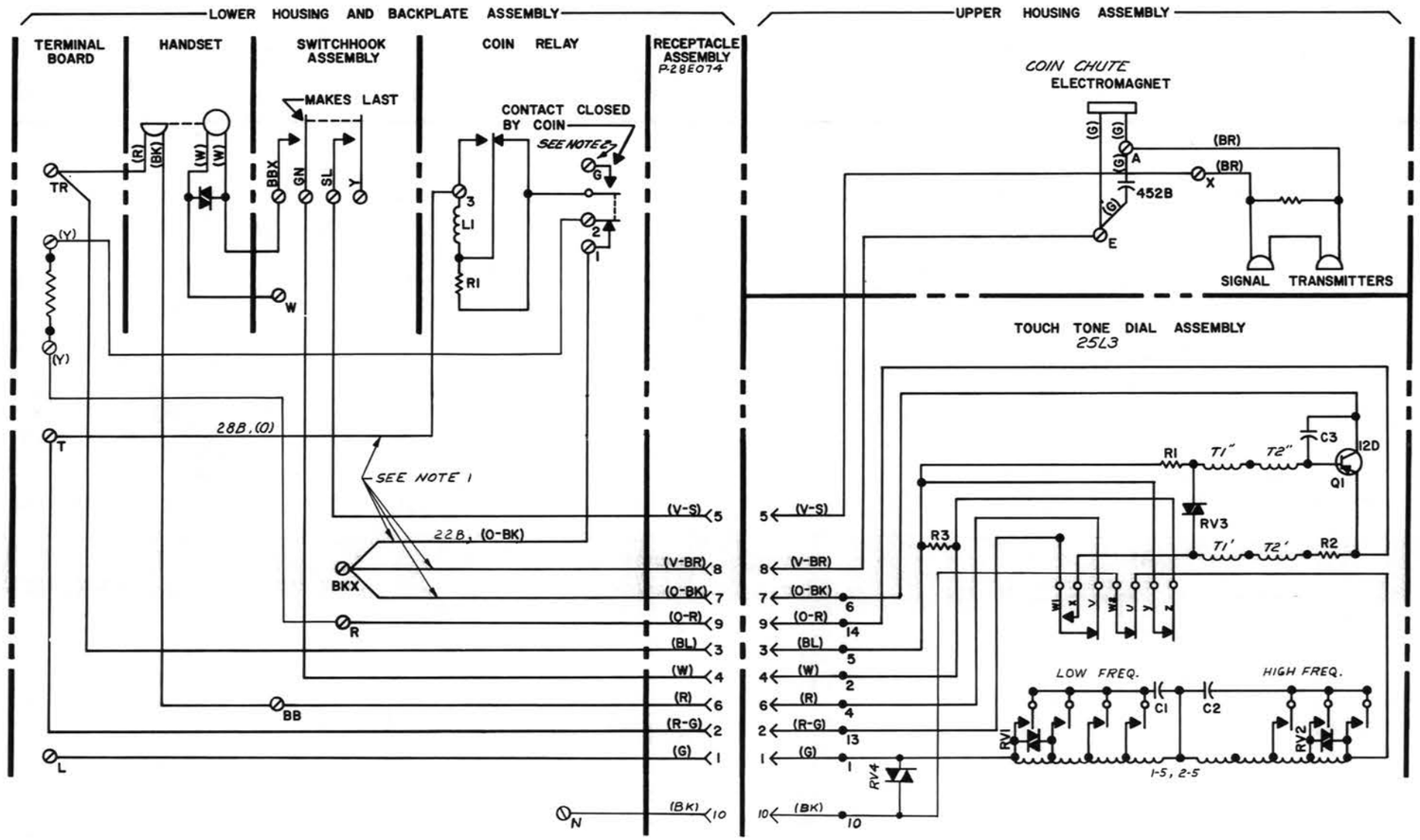

A-580339	
DRAWN E. HOLI	
DESIGN R.D. POMTER	ISSUE 1L
APPD	MKT
5-4-64 ISSUE-1	
CHANGED: 28B(O) LEAD FROM TERM. 3 OF COIN RELAY TO TERM. T OF TERM. BOARD WAS DESIGNATED (O) & PASSED THRU THE RECEPTACLE ASSEM.	
DGB	364153-B1
8-11-65	2
ADDED: RES AT TERM. BOARD & ASSOC LEADS CHANGED: TO AGREE WITH LATEST DESIGN OF 25L3 DIAL	
RL	443991-B1
10-14-65	3
ADDED: NOTE 2 & REF.	
AD	444175-B1
1-21-66	4

1234G COIN COLL	A-580340
USED ON	DWG

1234G COIN COLLECTOR CONNECTING DIAGRAM

SCALE NONE

WESTERN ELECTRIC CO. INC. ENGINEER OF MANUFACTURE

MATERIAL | FINISH

UNLESS OTHERWISE SPECIFIED, ALL DIMENSIONS ARE IN INCHES. NONLIMITED DIMENSIONS OTHER THAN SIZE OF RAW MATERIAL SHALL BE HELD AS FOLLOWS WHEN EXPRESSED:
TO 2 DECIMAL PLACES ±
TO 3 DECIMAL PLACES ±
AS ANGLES ±
FOR GENERAL INFORMATION ON SYMBOLS AND NOTES REFER TO MANUFACTURING STANDARD 16.003, PART 2, SECTION 227.

DWG SIZE 6S

CDS A-580339

ISSUE A-580339

RR