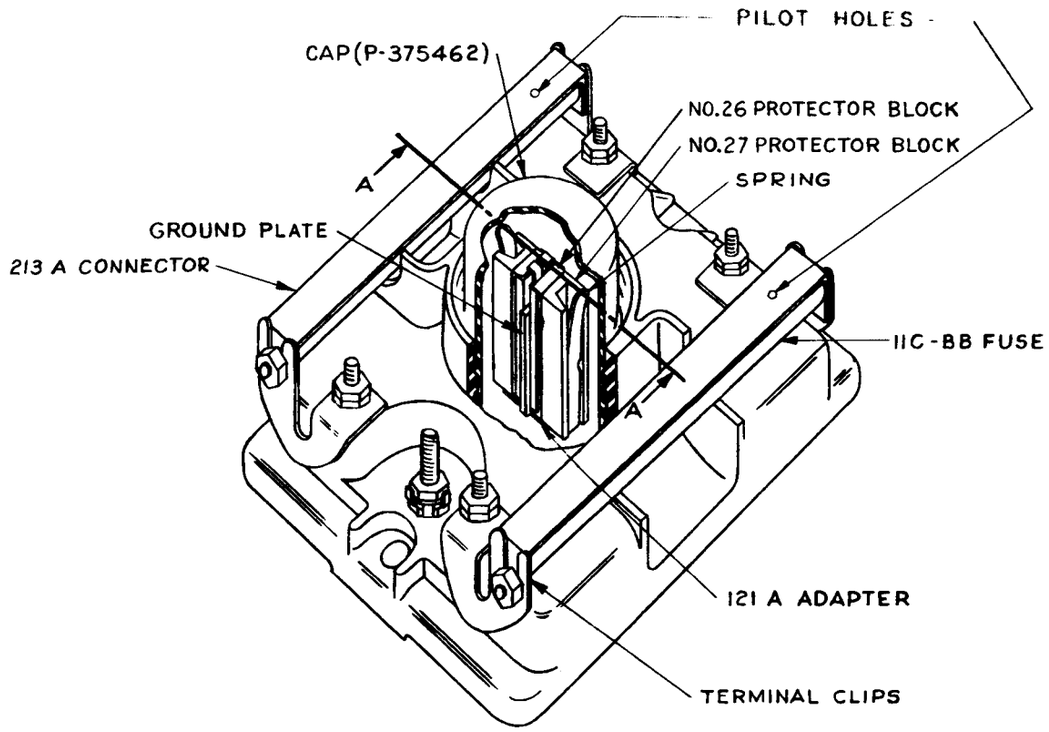

98AA PROTECTOR FUSELESS TYPE

FIG. 3

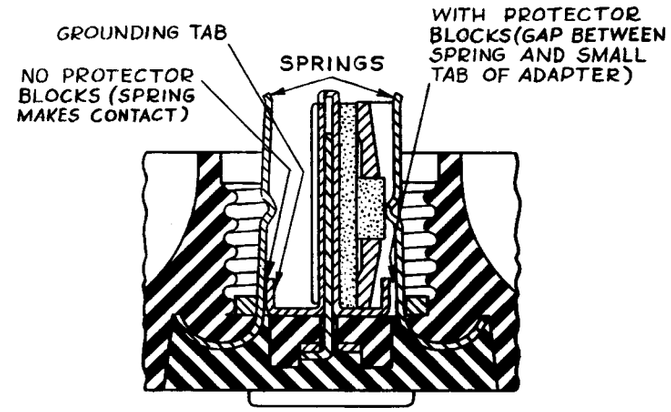

SECTION A-A
ENLARGED SECTION OF PROTECTOR WELL
FIG. 4

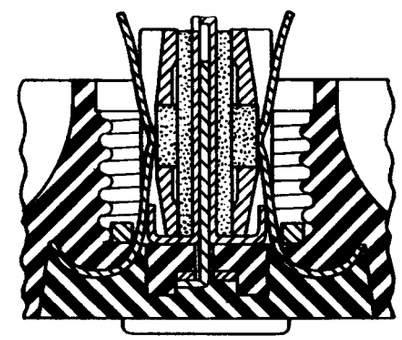

98AA PROTECTOR
AFTER POWER CONTACT
FIG. 5

A-

DRAWN K.L. WALTER
DRAWN S.E.T.M.

ISSUE: 1 4-30-53
THE 213A CONNECTORS WERE SHOWN CONNECTED BETWEEN NUTS AT EACH TERM. CLIP

ISSUE 2 1-26-54
CHANGED: FIG. 3 WAS FIG. 4, AND FIG. 4 WAS "SECTION A-A ENLARGED SECTION OF PROTECTOR WELL." IN FIG. 3, 213A CONNECTOR WAS A.N.A. 121A ADAPTER WAS 120A. FIGS. 4 & 5 CHANGED ACCORDINGLY. PROTECTOR REMOVED FROM LEFT SIDE IN FIG. 4.

J.M.B. W.J.H. M.K.M. A.P.B.

ISSUE 3 7-25-55
CHANGED: PILOT HOLES ADDED TO 213A CONN.

J.E.M. C.F.K.

ISSUE 4 11-2-60

ISSUE 3 B-178720

REQ	IDENTIFICATION NO.	DESCRIPTION	REF DESIG	NOTE	ITEM

STOCK LIST

SUPPLEMENTARY DRAWINGS

SIGNIFICANCE OF SYMBOLS AND ITEM NUMBER SUFFIXES

B—PARTIAL ASSEMBLIES OR OTHER DRAWINGS WITH STOCK LISTS
D—PARTS SHIPPED LOOSE
} ITEMS NOT SPECIFIED AS "B" OR "D" PARTS IN ITEM COLUMN ARE INDIVIDUAL ("A") PARTS.

WHERE ITEMS HAVE REFERENCE DESIGNATIONS, THEY MAY BE USED IN LIEU OF ITEM NUMBERS ON THE DELINEATION.
✓ IN "REQ" COLUMN OF STOCK LIST—QUANTITY AS REQUIRED
✓ IN "REQ" COLUMN OF SUPPLEMENTARY DWG LIST—DRAWING REQUIRED
● DENOTES MANUFACTURE DISCONTINUED
■ DENOTES MANUFACTURE LIMITED

DIMENSIONS UP TO AND INCLUDING 72 INCHES EXPRESSED IN INCHES. NON-LIMITED DIMENSIONS, OTHER THAN SIZE OF RAW MATERIAL, SHALL BE HELD WITHIN FRACTIONAL DECIMAL

DWG SIZE 3S

USED ON | DWG

98AA PROTECTOR

SCALE ~

WESTERN ELECTRIC CO, INC
ENGINEER OF MANUFACTURE

BELL TELEPHONE LABORATORIES, INC

DO NOT MICROFILM

B-178720

3-27-61
RC