NOTES:

1. DEAD DRESS THESE SPADE TIPPED LEADS PER A-850071-39 AND STORE.
2. LACE CONDUCTORS INDICATED FOR 7 INCHES.
3. WHEN A 617A KEY IS PART OF THE TELEPHONE SET, ATTACH THE SPADE-TIPPED CONDUCTOR OF THIS KEY TO THE SG TERMINAL ON THE MOUNTING CORD TERMINAL STRIP. REMOVE THE SPADE-TIPPED STRAP FROM THE CG TERMINAL ON THE STRIP.

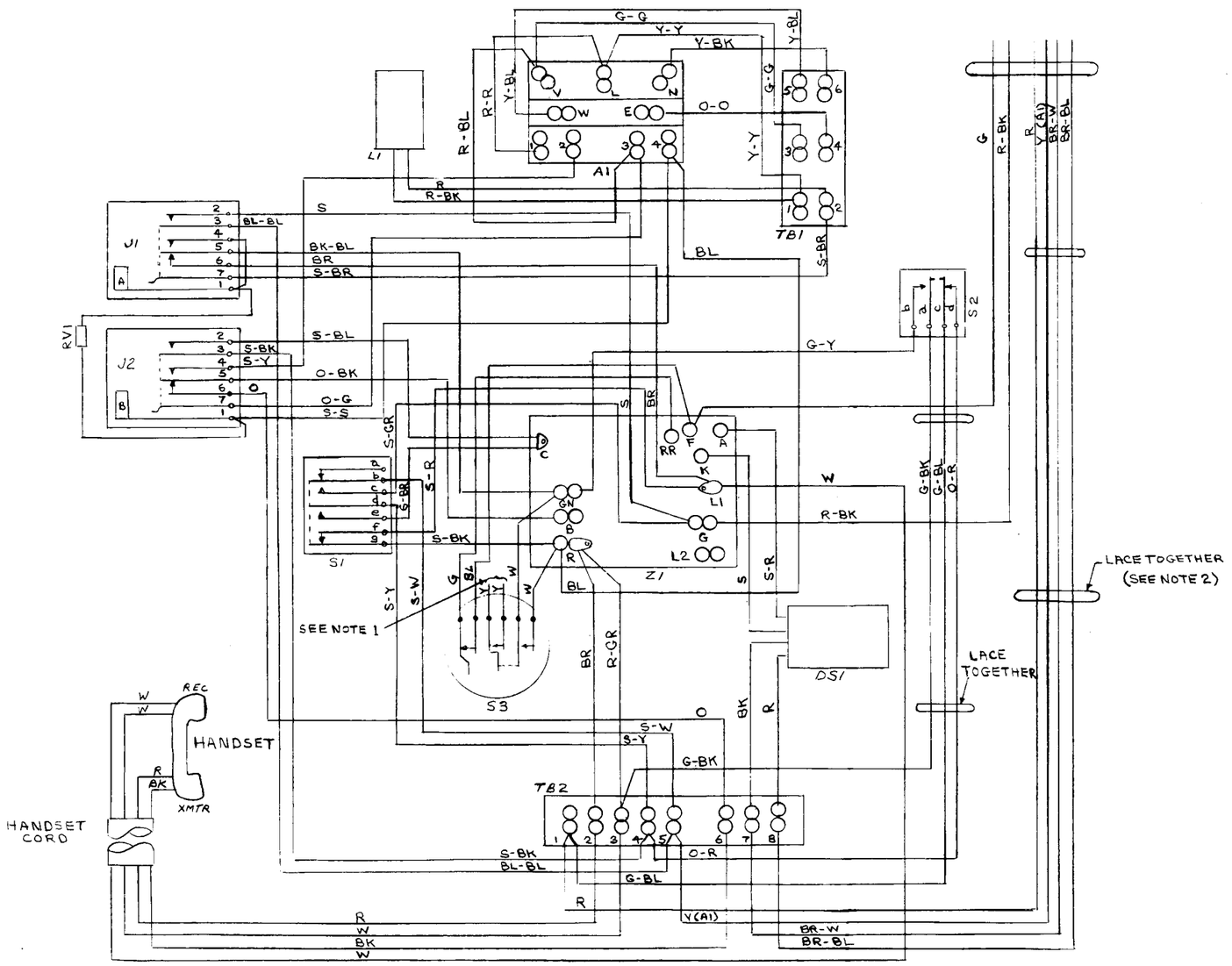

REQ	IDENTIFICATION NO.	DESCRIPTION	REF DESIG	NOTE	ITEM
		STOCK LIST			

SUPPLEMENTARY DRAWINGS

SIGNIFICANCE OF SYMBOLS AND ITEM NUMBER SUFFIXES

S—PARTIAL ASSEMBLIES OR OTHER DRAWINGS WITH STOCK LISTS
D—PARTS SHIPPED LOOSE
} ITEMS NOT SPECIFIED AS "S" OR "D" PARTS IN ITEM COLUMN ARE INDIVIDUAL ("A") PARTS.

WHERE ITEMS HAVE REFERENCE DESIGNATIONS, THEY MAY BE USED IN LIEU OF ITEM NUMBERS ON THE DELINEATION.

✓ IN "REQ" COLUMN OF STOCK LIST—QUANTITY AS REQUIRED
✓ IN "REQ" COLUMN OF SUPPLEMENTARY DWG LIST—DRAWING REQUIRED
● DENOTES MANUFACTURE DISCONTINUED
■ DENOTES MANUFACTURE LIMITED
AB—DENOTES APPARATUS BOOK DRAWINGS

DIMENSIONS UP TO AND INCLUDING 72 INCHES EXPRESSED IN INCHES. NON-LIMITED DIMENSIONS, OTHER THAN SIZE OF RAW MATERIAL, SHALL BE HELD WITHIN FRACTIONAL DECIMAL

DWG SIZE 4S

F-659919

ENGR FEB FBB
DRAWN EHV
ISSUE 1 1-8-64

638A & 639A TYPE TELEPHONE SET WIRING DIAGRAM

SCALE

WESTERN ELECTRIC CO, INC
ENGINEER OF MANUFACTURE

BELL TELEPHONE LABORATORIES INCORPORATED

F-659919