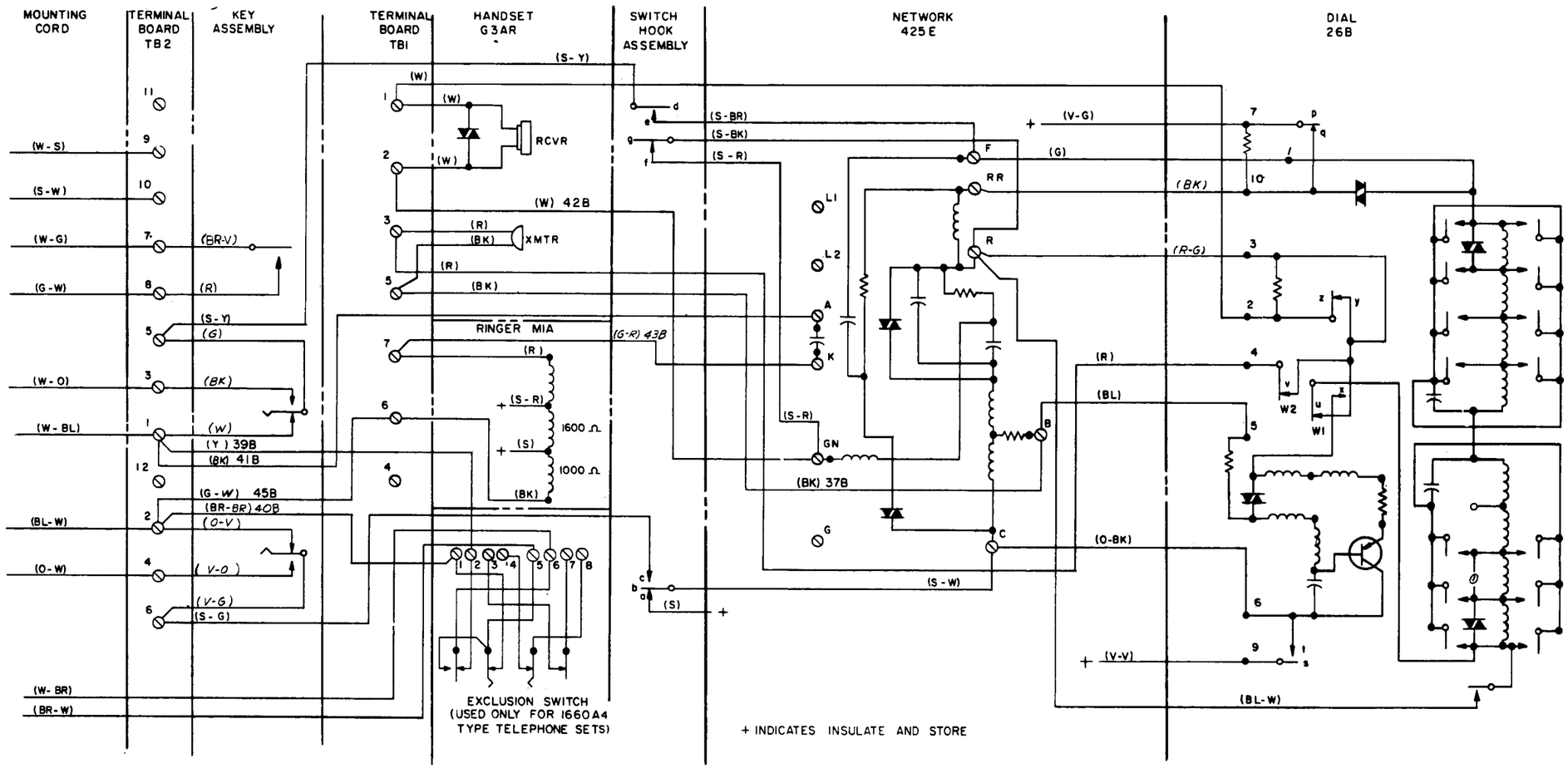

ISSUE

ENGR FEB	FEB	
DRAWN		
8-14-64	ISSUE: 1	

USED ON	DWG
1660A3 & 1660A4 TYPE TEL. SETS WITH 26B DIAL CONNECTING DIAGRAM	

SCALE

MATERIAL	FINISH

UNLESS OTHERWISE SPECIFIED, ALL DIMENSIONS ARE IN INCHES. NONLIMITED DIMENSIONS OTHER THAN SIZE OF RAW MATERIAL SHALL BE HELD AS FOLLOWS WHEN EXPRESSED:

TO 2 DECIMAL PLACES ± AS ANGLES ±

TO 3 DECIMAL PLACES ±

FOR GENERAL INFORMATION ON SYMBOLS AND NOTES REFER TO MANUFACTURING STANDARD 16.003, PART 2, SECTION 227.

DWG. SIZE 2S

WESTERN ELECTRIC CO, INC
ENGINEER OF MANUFACTURE
CENTRAL OFFICE EQUIPMENT

BELL TELEPHONE LABORATORIES
INCORPORATED

CDS B-659927