ISSUE

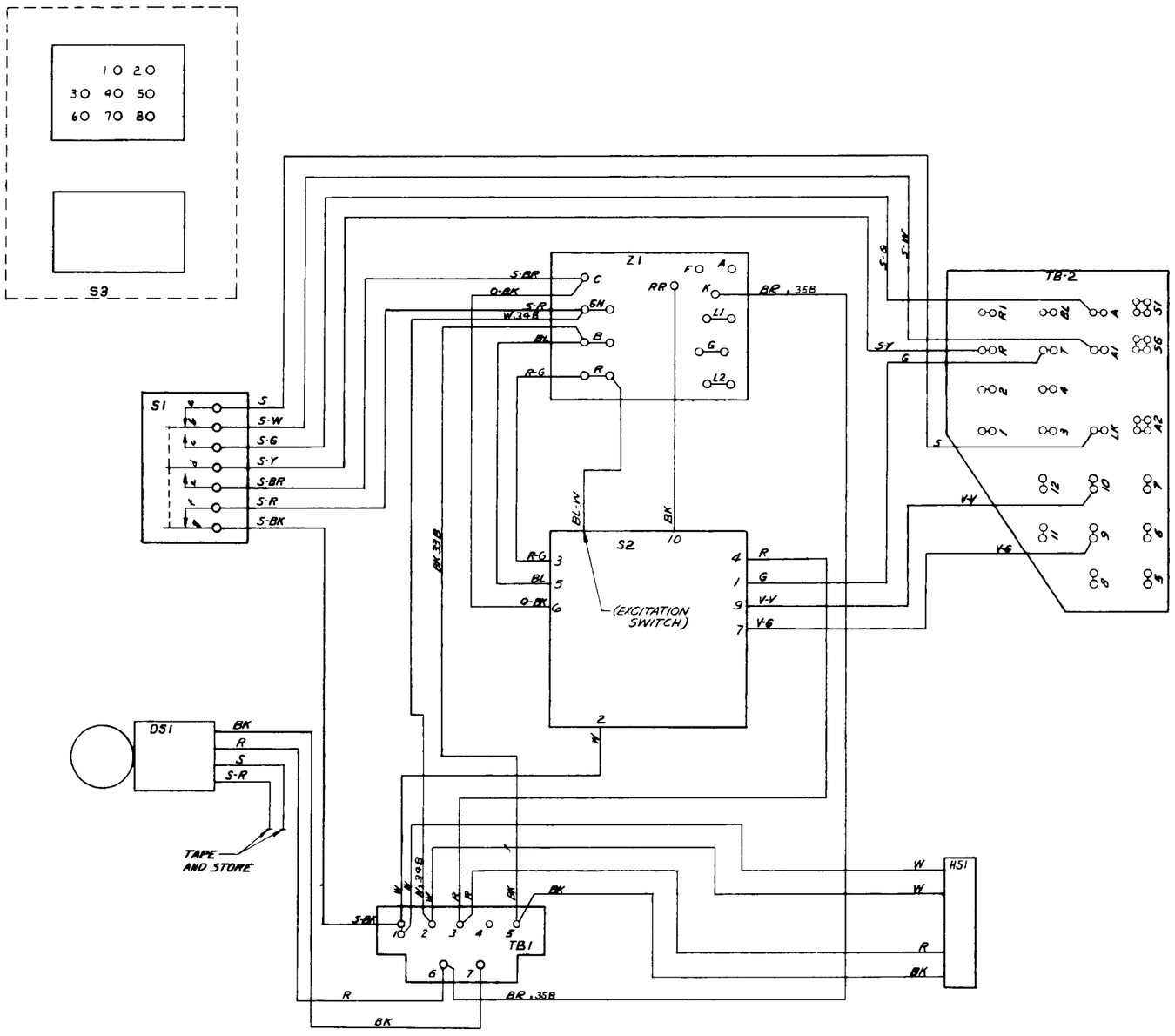

TABLE A CORDAGE CONDUCTOR TERMINATION		
CONDUCTOR COLOR	SET END TERMINAL	SET END COMPONENT
O-W	A1	TB2
W-O	1	
W-S	2	
R-G	3	
BK-BL	4	
BK-BR	5	
Y-O	6	
Y-G	7	
G-Y	8	
Y-BR	BL	
BR-Y	SG	
Y-S	7	TB1
S-Y	A	Z1
BR-BK		TAPE & STORE
O-Y		
O-V		
V-O		
S-V		
V-S		
BR-V		
V-BR		
G-V		
V-G		
S-W		
G-R		
BL-BK		
V-BL		
BL-V		

TABLE B STRAP CONDUCTORS		
CONDUCTOR COLOR	SET END TERMINAL	SET END COMPONENT
G	T	TB2
O-R	1	
S-W	A2	
R-O	2	
G-R	A2	
S-R	3	
BL-BK	A-2	
W-BR	4	
BR-BK	A2	
BR-W	5	
O-Y	A2	
R-S	6	
Y-G	7	
G-Y	8	
BK-BL	A2	
G-W	A	
O-W	A2	
R	R	
BL-Y		TAPE & STORE
Y-BL		
W-G		
BL-W		
W-BL		
S-BK		
S-Y		

TELEPHONE SET	KEY	KEY FEATURES	EXCLUSION	NOTE
1662 A1	599A	HPPPPP		
1662 A2	598A	PPPPPP		
1662 A3	599B	HPPPPC		
1662 A4	599A	HPPPPP	✓	
1662 A5	598A	PPPPPP	✓	
1662 A6	599B	HPPPPC	✓	

KEY FEATURE DESIGNATIONS } H = HOLD ; P = PICKUP ; C = CUTOFF ;

MATERIAL

FINISH

UNLESS OTHERWISE SPECIFIED, ALL DIMENSIONS ARE IN INCHES. NONLIMITED DIMENSIONS OTHER THAN SIZE OF RAW MATERIAL SHALL BE HELD AS FOLLOWS WHEN EXPRESSED:

TO 2 DECIMAL PLACES ±

AS ANGLES ±

TO 3 DECIMAL PLACES ±

FOR GENERAL INFORMATION ON SYMBOLS AND NOTES REFER TO MANUFACTURING STANDARD 16,003, PART 2, SECTION 227.

DWG. SIZE 2S

ENGR FEB

DRAWN

8-14-64 ISSUE: 1

USED ON | DWG

1662A TYPE TELEPHONE SET WITH 26B DIAL CONNECTING DIAGRAM

SCALE

WESTERN ELECTRIC CO, INC
ENGINEER OF MANUFACTURE
CENTRAL OFFICE EQUIPMENT

BELL TELEPHONE LABORATORIES
INCORPORATED

CDS B-659928