7 1/8

10 1/4

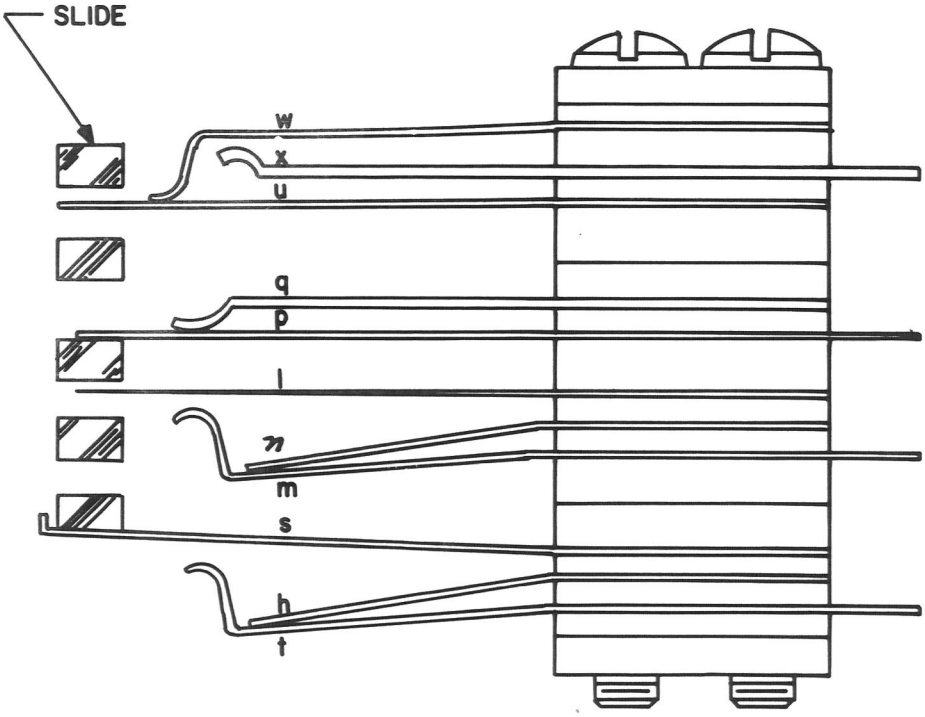

ENGR FEB			
DRAWN			
2-2-66	ISSUE: 1		
N CONTACT WAS H			
EHF			
8-7-70	ISSUE 2		
REMOVED: "& 25N" FROM TITLE			
D.M.			
2-21-73	ISSUE 3		

DWG

USED ON

25K DIAL
MODIFIED COMMON SWITCH

SCALE

WESTERN ELECTRIC COMPANY, INC.
ENGINEER OF MANUFACTURE

BELL TELEPHONE LABORATORIES
INCORPORATED

CDS B-659979
A-

SHEET

NO. OF SHEETS PER SET SEE SHEET 1

1S