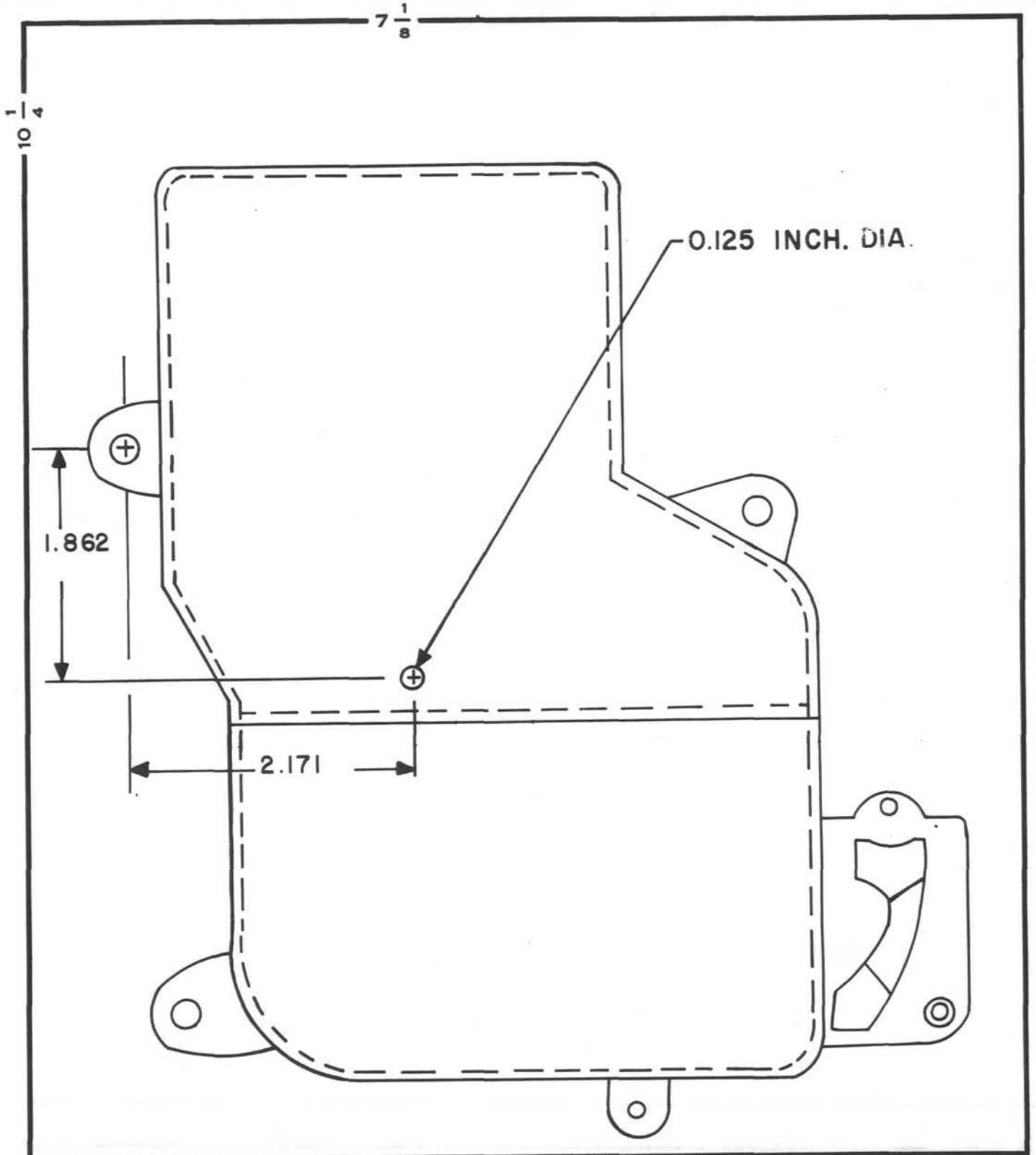


| | | | |
|---|---|---|---|
| ENGR F.R.L. | ISSUE 1 | | |
| DRAWN 7-1-66 | DEPTH & DIAMETER OF HOLE CHANGED | | |
| F.R.L. | ISSUE 2 | 12-1-66 | CLARITY HOLE DIMENSION |
| F.R.L. | ISSUE 3 | 3-1-67 | |

DWG

USED ON

MODIFICATION — DIAL HOUSING

P-15E390

SCALE

WESTERN ELECTRIC COMPANY, INC.
ENGINEER OF MANUFACTURE

BELL TELEPHONE LABORATORIES
INCORPORATED

CDS B-659992

SHEET 1

NO. OF SHEETS PER SET SEE SHEET 1