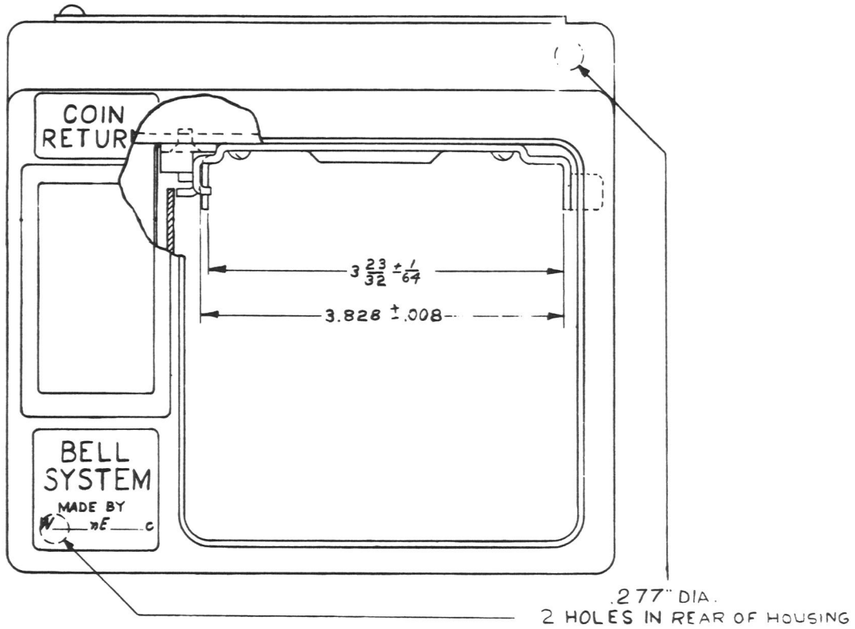

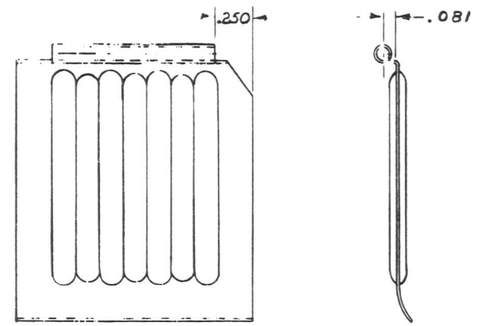

COIN SHIELD

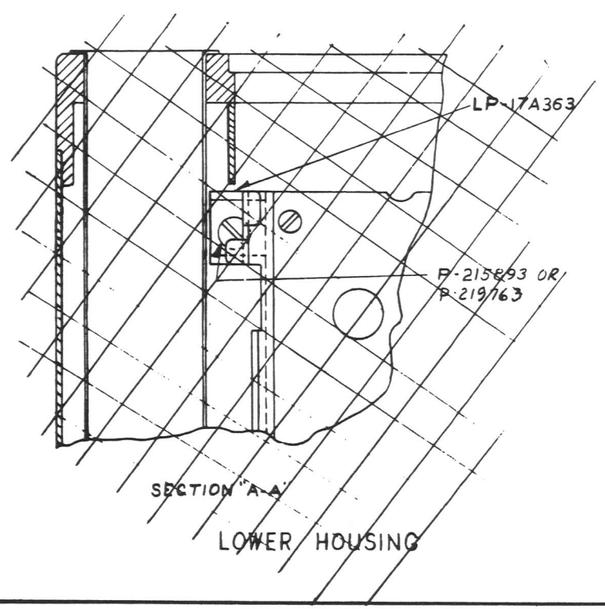

A-	
ENGR J.F. JESSICH	
DRAWN SUMMIT ENG. DR.	
ISSUE 1 6-30-53	
THE DIM 3 23/32 ± 1/64 WAS 3 23/32 P-215893 AND P-219763. THE TITLES "COIN SHIELD" AND "LOWER HOUSING" WERE NOT SHOWN UNDER SKETCHES	
J.B.D.	
ISS. 2 12-8-53 IN SECTION A-A, P-219763 WAS NO. SPEC. BSR 361.702 WAS SPEC. IN TITLE.	
CTC	
ISSUE 3 9-24-54 ADDED 2 HOLES .277 DIA IN REAR OF HOUSING	
RFS	AJB
ISSUE 4 11-15-58 REMOVED SECTION "A-A"	
	AJB
ISS. 5 11-1-60	

B767862 5

REQ	IDENTIFICATION NO.	DESCRIPTION	REF DESIG	NOTE	ITEM
		STOCK LIST			

SUPPLEMENTARY DRAWINGS

SIGNIFICANCE OF SYMBOLS AND ITEM NUMBER SUFFIXES

B—PARTIAL ASSEMBLIES OR OTHER DRAWINGS WITH STOCK LISTS
D—PARTS SHIPPED LOOSE
} ITEMS NOT SPECIFIED AS "B" OR "D" PARTS IN ITEM COLUMN ARE INDIVIDUAL ("A") PARTS.

WHERE ITEMS HAVE REFERENCE DESIGNATIONS, THEY MAY BE USED IN LIEU OF ITEM NUMBERS ON THE DELINEATION.

✓ IN "REQ" COLUMN OF STOCK LIST—QUANTITY AS REQUIRED
✓ IN "REQ" COLUMN OF SUPPLEMENTARY DWG LIST—DRAWING REQUIRED
● DENOTES MANUFACTURE DISCONTINUED
■ DENOTES MANUFACTURE LIMITED

DIMENSIONS UP TO AND INCLUDING 72 INCHES EXPRESSED IN INCHES. NON-LIMITED DIMENSIONS, OTHER THAN SIZE OF RAW MATERIAL, SHALL BE HELD WITHIN FRACTIONAL DECIMAL.

DWG SIZE O

USED ON	DWG
BSR-361.702	

COIN COLLECTOR LOWER HOUSING & COIN SHIELD

SCALE

WESTERN ELECTRIC CO. INC
ENGINEER OF MANUFACTURE

BELL TELEPHONE LABORATORIES, INC

B767862
A