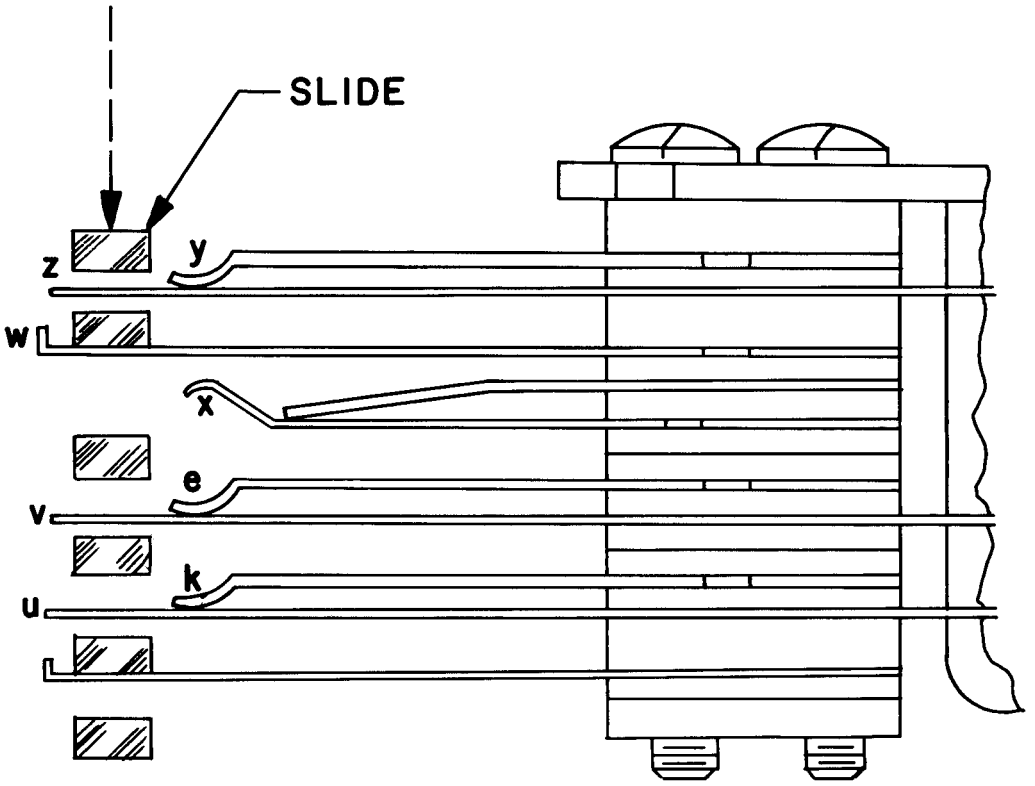

NOTE:
FOR 35G3A DIALS, W-X CONTACTS ARE REVERSED.

ENGR FEB	JEB	RWK	ISSUE: 1	ADDED 35G3A IN TITLE & NOTE		R.C.W.	2-13-68	ISSUE 2		DWG	25P4, 25W3, 35A3, 35A3A, & 35E4A 35G3A DIALS COMMON SWITCH
DRAWN			2-15-67							USED ON	SCALE

WESTERN ELECTRIC COMPANY, INC.
ENGINEER OF MANUFACTURE

BELL TELEPHONE LABORATORIES
INCORPORATED

CDS B-875823 SHEET

NO. OF SHEETS PER SET SEE SHEET 1