$7\frac{1}{8}$

$10\frac{1}{4}$

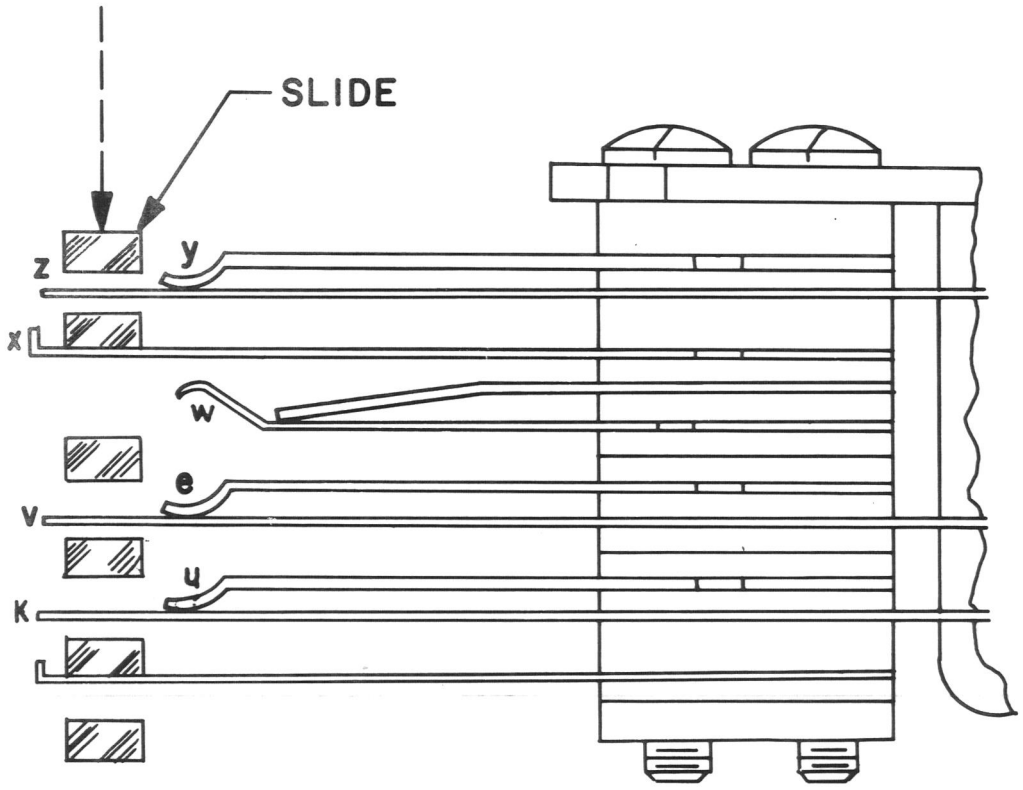

NOTE:
FOR 35G3A & W4A DIALS, K-U CONTACTS ARE REVERSED.

ENGR FEB			
DRAWN			
2-15-67	ISSUE: 1	ADDED 35G3A IN TITLE & NOTE	
R.C.W.	2-13-68	ISSUE 2	REMOVED: 35A3 ADDED: 35W4A
EHF	8-7-70	ISSUE 3	W-X & K-U CONTACTS REVERSED NOTE REFERRED TO W-X CONTACTS.
7-13-72	4		

DWG: 25P4, 25W3, 35A3A, 35E4A 35G3A & 35W4A DIALS COMMON SWITCH

SCALE

USED ON: BQRS 3C2 3D6

WESTERN ELECTRIC COMPANY, INC.
ENGINEER OF MANUFACTURE

BELL TELEPHONE LABORATORIES
INCORPORATED

CDS B-875823

SHEET

NO. OF SHEETS PER SET SEE SHEET 1