$7\frac{1}{8}$

$10\frac{1}{4}$

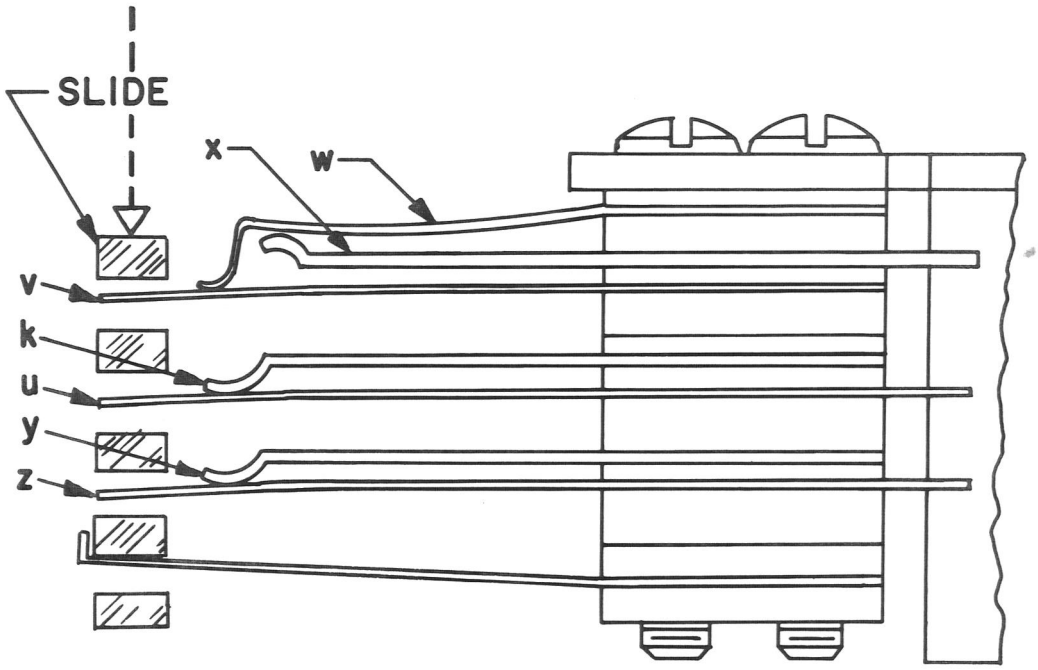

ENGR FEB	FEB	CTK	
DRAWN 2-15-67	ISSUE: 1		
CHANGED: TITLE CODE WAS 35E			
D.M.	JF		
2-21-73 ISSUE 2			

DWG

USED ON

35E4 DIALS

COMMON SWITCH

SCALE

WESTERN ELECTRIC COMPANY, INC.
ENGINEER OF MANUFACTURE

BELL TELEPHONE LABORATORIES
INCORPORATED

CDS B-875824

SHEET

NO. OF SHEETS PER SET SEE SHEET 1