NOTE

A BROWN GONG SIGNAL LEAD OF INSUFFICIENT LENGTH FOR CONNECTING TO BKX TERMINAL SHALL BE CONNECTED TO THE BK TERMINAL AND A BLACK STRAP CONNECT "BK" TO "BKX."

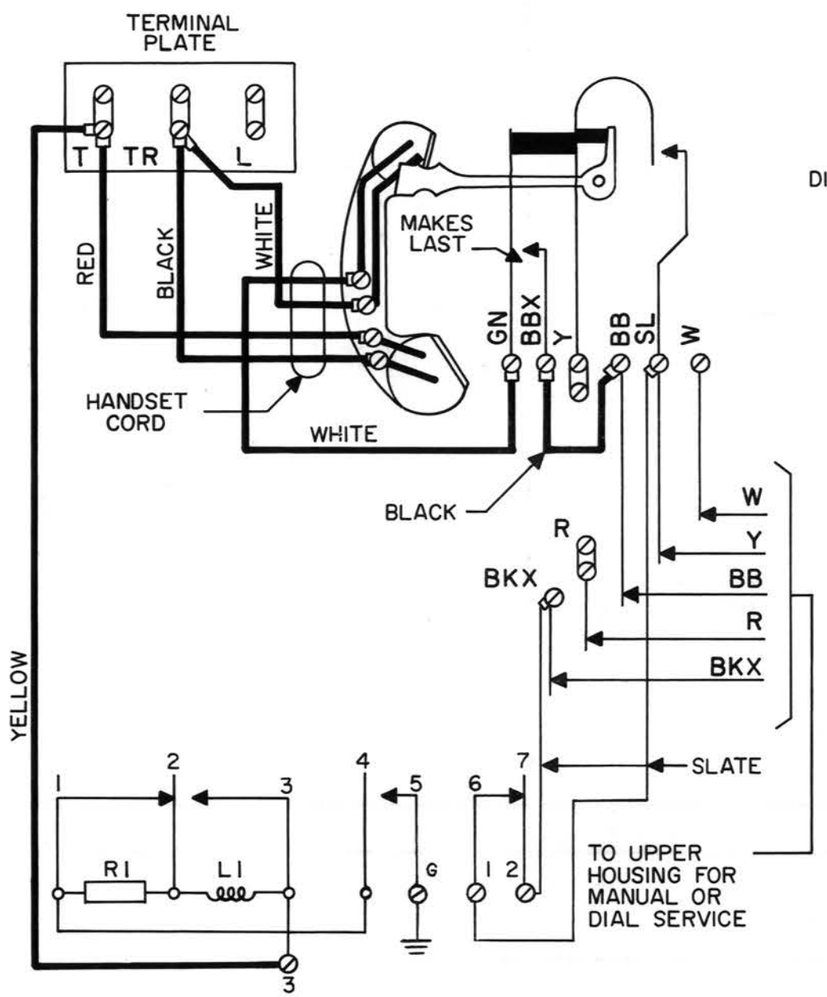


SINGLE COIL SLOW-RELEASE RELAY

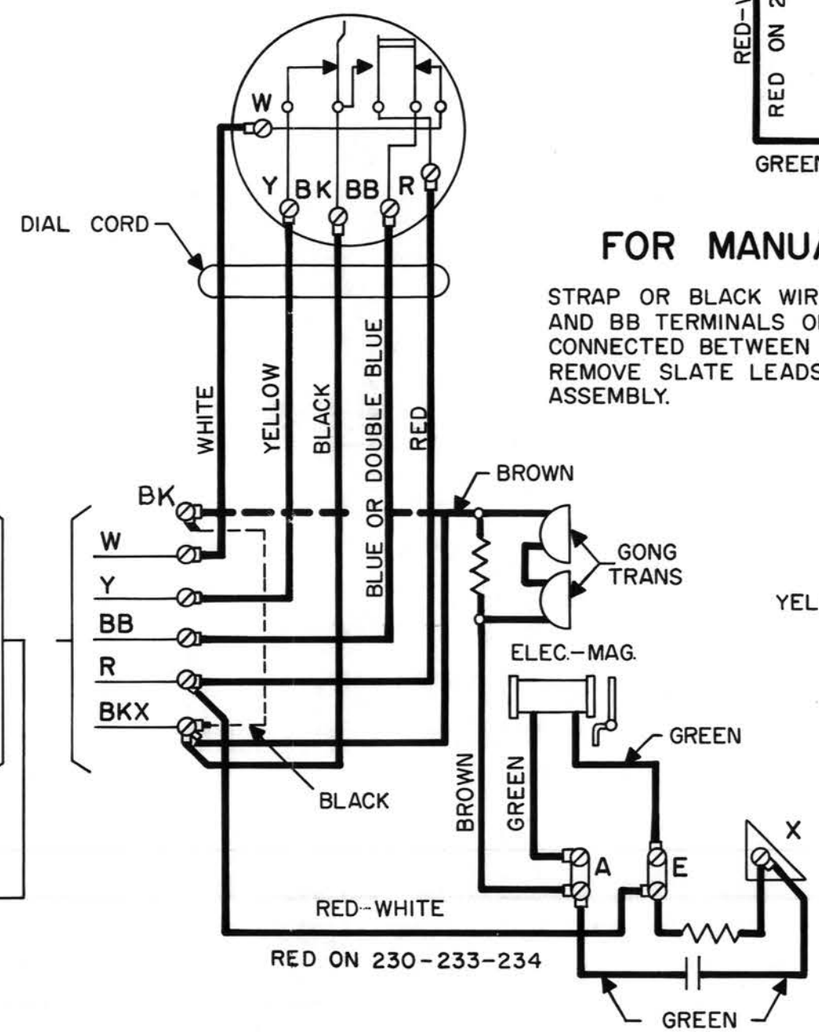


FOR DIAL SERVICE

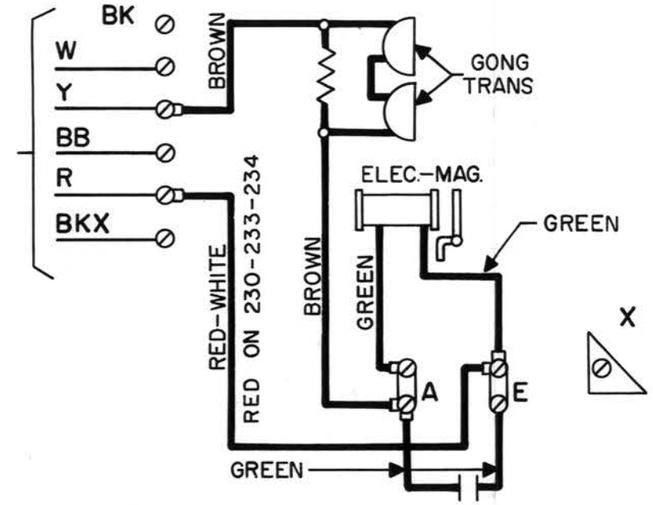


## FOR MANUAL SERVICE

STRAP OR BLACK WIRE SHOWN BETWEEN BBX AND BB TERMINALS ON BACKPLATE SHALL BE CONNECTED BETWEEN BBX AND W TERMINALS. REMOVE SLATE LEADS FROM RELAY AND SPRING ASSEMBLY.

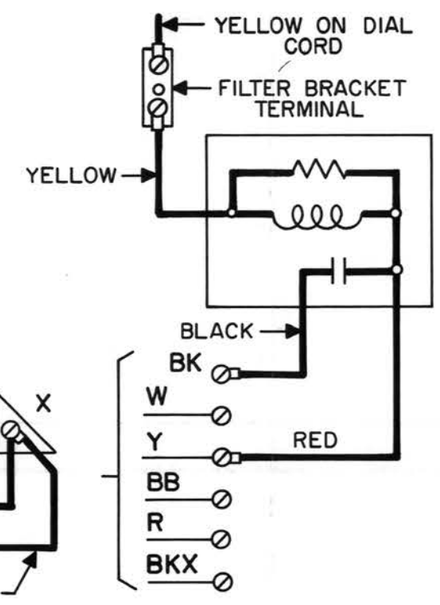


FILTER CONNECTIONS

| | | |
|---|---|---|
| ENGR | | AJB |
| DRAWN | | |
| ISSUE:1 | 5-15-60 | CTK |

ADDED
234G TO TITLE AND IN CONNECTIONS FOR DIAL AND MANUAL SERVICE.

| | | |
|---|---|---|
| | CTK | AJB |
| ISSUE:2 | | 10-1-61 |

ADDED
G TERMINAL OF RELAY TO GROUND

| | | |
|---|---|---|
| | CTK | FRL |
| ISSUE 3 | | 2-1-66 |

| USED ON | DWG |
|---|---|
| 191, 195, 196, 197 CNT, DNT, GNT, HNT, AND 220, 223 CT, DT, GT, HT | |

230 AND 233 C,D,G,H AND 234G COIN COLLECTORS -CONNECTIONS-

SCALE

WESTERN ELECTRIC CO, INC
ENGINEER OF MANUFACTURE
CENTRAL OFFICE EQUIPMENT

BELL TELEPHONE LABORATORIES
INCORPORATED

B-942833
A

DIMENSIONS UP TO AND INCLUDING 72 INCHES EXPRESSED IN INCHES. NON-LIMITED DIMENSIONS, OTHER THAN SIZE OF RAW MATERIAL, SHALL BE HELD WITHIN FRACTIONAL DECIMAL

DWG SIZE 2S