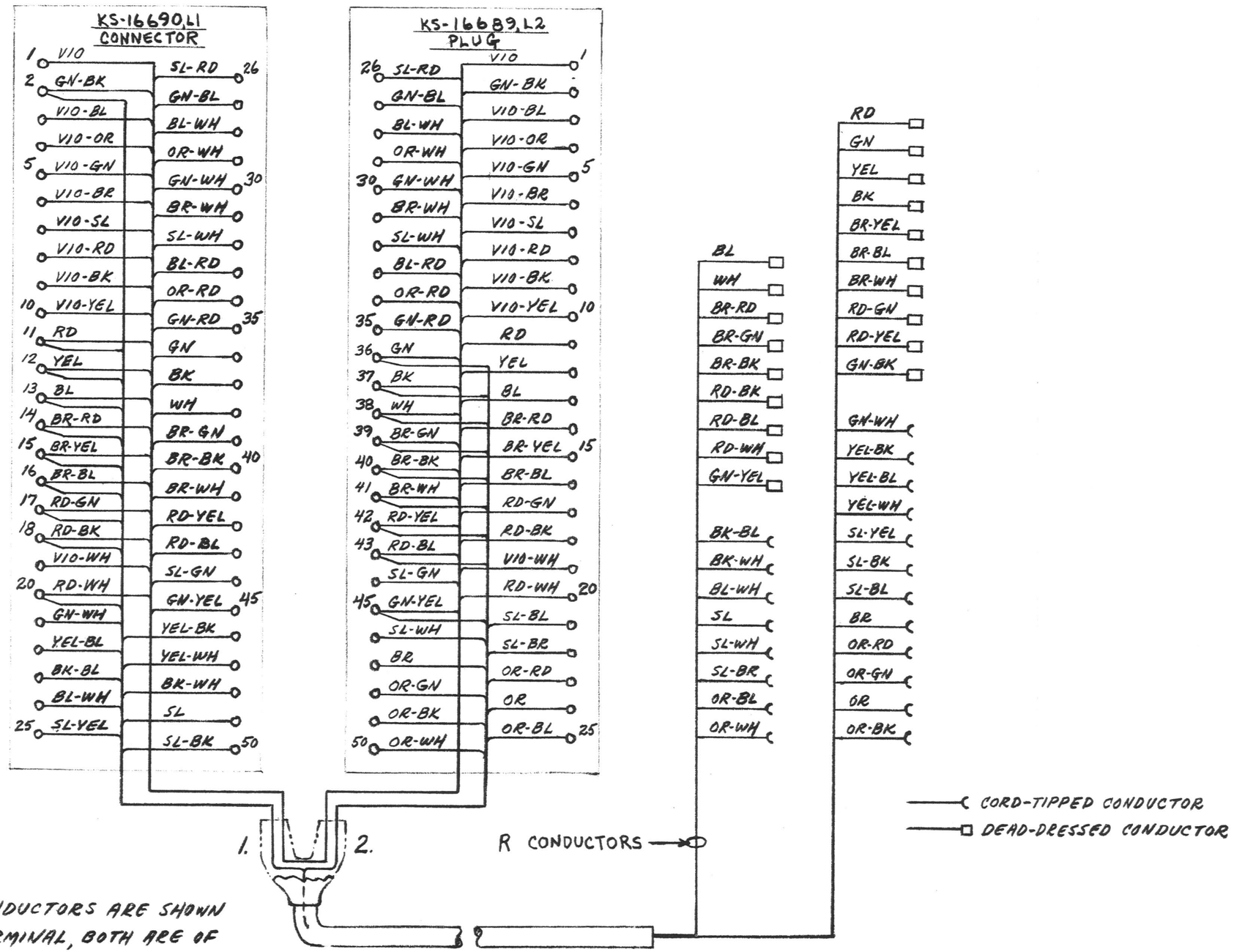

NOTE:
1. WHERE TWO CONDUCTORS ARE SHOWN TO THE SAME TERMINAL, BOTH ARE OF THE SAME COLOR.

B-984867

C.D. STULGA		KJP
DRWN: CDS		
ISSUE 1 11-2-61		

BSRS	451.304
USED ON	NO.

148A ADAPTER
DIAGRAM OF CONNECTIONS

WESTERN ELECTRIC CO. INC

BELL TELEPHONE LABORATORIES INCORPORATED

B-984867