Dantel

Y2K Compliant

DANTEL LINKMASTER X.25 CONCENTRATOR (SMT)

Table of Contents

Ordering Information 2
General Description 2
Circuit Description 3
Application Information 7
Installation 8
Operation 16
Printer Syntax 16
Technical Specifications 27
Warranty 28

CAUTION

- Install or remove modules from the shelf only when the power is off. If you install a module in the shelf with the power on, the internal circuitry may suffer damage and the product warranty will be void.
- Remove and install circuit boards only in a static-safe environment (use anti-static wrist straps, smocks, footwear, etc.).
- Keep circuit boards in their anti-static bags when they are not in use.
- Do not ship or store circuit boards near strong electrostatic, electromagnetic, magnetic, or radioactive fields.
- For more complete information on electrostatic discharge safety precautions, refer to Bellcore™ Technical Reference # TR-NWT-000870.

About this Practice:

This practice has been reissued to:

- Update Table C.

Re-issued Practices: Updated and new content can be identified by a banner in the right margin.

UPDATED

Issue date: February 2000

Copyright 2000 by Dantel, Inc. • Dantel is a registered trademark of Dantel, Inc. • ISO 9001 Registered
Printed in the U.S.A.

ORDERING INFORMATION

NOTE: This section lists the different options available for this product. To order any of the available options, contact Dantel Inside Sales through our toll-free number, **1-800-432-6835.**

OPTION NUMBER	FEATURES
B11-46095-01	LinkMaster Async/Synch Multi Port Processor.
Glossary Utility Disk	Defines the terms used in Dantel's product documentation.

GENERAL DESCRIPTION

The 46095 LinkMaster (formally known as NEXCON) provides X.25 Packet Network functions within Dantel's 460 Alarm and Control System (460 ACS). The LinkMaster converts data at remote locations to X.25 format for transmission to operation centers.

The LinkMaster has eleven input/output ports:

- Eight data ports
- A printer/configuration port
- A co-locator/data port
- An X.25 port

NOTE:
The eight data ports can communicate through an asynchronous or synchronous RS-232 Interface

The LinkMaster fits into any Dantel 400-type or similar equipment shelf. The LinkMaster requires two slots in the shelf and operates on -20 to -60 VDC.

NOTE:
The printer port and co-locator/data port (when available) communicate through an asynchronous RS-232 Interface only.

The B11-46095-01:

- Contains 2MB of back-end memory.
- Utilizes surface-mount technology.
- Has a maximum Printer Port baud-rate of 115.2K
- Requires X.25 software version 3.0 to enable all available features

NOTE:
The X.25 port can communicate through a synchronous RS-232 Interface or through a V.35 Interface.

The 46095 LinkMaster can be configured using T/Shell Editor 46606 and the Printer/Configuration port. Additionally, the 46095 can be provisioned over the Virtual Access Interface over the high speed X.25 network connection. Refer to the ***Virtual Access/ Alarm Messages*** section of the 46606 Asynchronous/Synchronous Multi-Port X.25 Interface Editor manual.

CIRCUIT DESCRIPTION

Fig. 1 shows the functional schematic for the B11-46095 LinkMaster module. The LinkMaster has two sections: the X.25 section (back end) and the data port expansion section (front end). The two sections interconnect through the dual port RAM (Random Access Memory). Power for the data port section is supplied by the X.25 section.

FIG. 1 - FUNCTIONAL SCHEMATIC, B11-46095 LINKMASTER MODULE

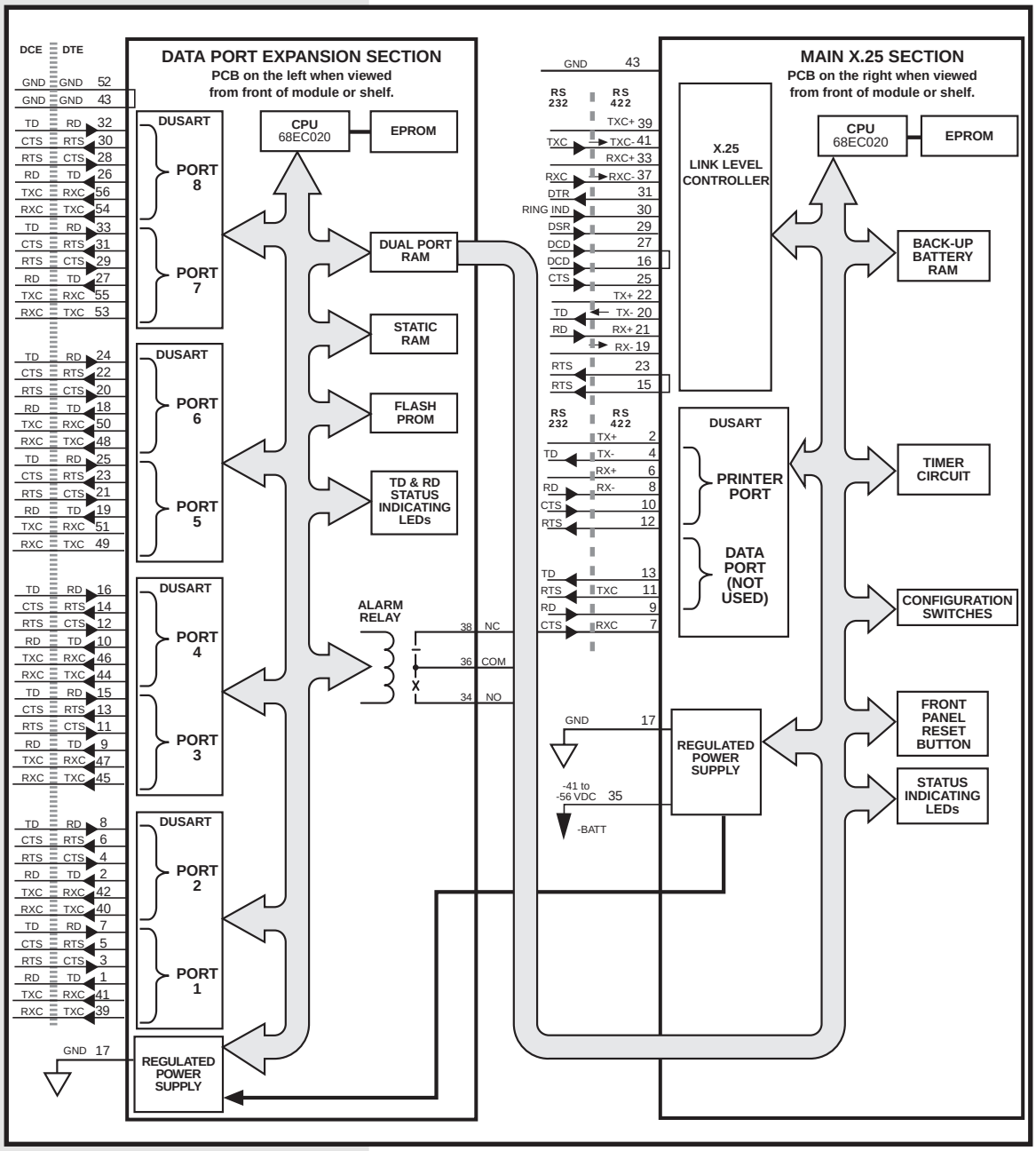

X.25 Section (Back End)

The X.25 section circuitry consists of:

- A CPU (Central Processing Unit)

  The CPU is a 32-bit microprocessor that operates at a frequency of 20 MHz.

- Battery backed-up RAM

  A lithium battery backs up data stored in RAM.

- An X.25 link level controller

  The X.25 link level controller:

  - Interfaces the X.25 port directly to the CPU.
  - Provides all frame formatting and frame check sequence (FCS) generation and detection.
  - Includes buffer management of multiple packets.

    Contained in the buffer management is a dual channel direct memory access (DMA) controller with one receive channel and one transmit channel.

    The DMA controller transfers received packets directly from the controller receiver buffer into memory. At the same time, the DMA controller transfers packets that transmit from memory to the controller transmit buffer.

- A timer circuit

  The timer circuit generates periodic interrupts to the CPU and control circuits.

- A DUSART (Dual Universal Synchronous/Asynchronous Receiver/Transmitter)

  The CPU controls the DUSART which provides handshaking control for the printer and data ports.

- Front panel reset button

  Three eight-lever DIP switches provide module configuration. The front panel reset button is recessed which prevents accidental resets.

- Status indicating LEDs

  A group of three status indicating LEDs are in the lower right hand corner of the front panel. The top LED, labeled X.25, lights up when a link is established and the X.25 port transmits data. The middle LED, labeled DATA, flashes when the co-locator port is active and transmitting data. The bottom LED, labeled PRINTER, is a dual-purpose, multi-color LED. Green indicates the printer port is transmiting or receiving data. Red indicates low back-up battery voltage.

CONTINUED . . .

- A regulated power supply

  The regulated power supply provides +5 VDC and ±12 VDC output power for the module's circuits which operate on -20 to -60 VDC input power. This power supply routes power to the dataport expansion section.

DATA PORT EXPANSION SECTION (FRONT END)

The circuitry in this section consists of:

- A CPU

  The CPU is a 32-bit microprocessor that operates at a frequency of 20 MHz.

- Four DUSARTs

  Each DUSART provides synchronous or asynchronous data communications for two of the eight data ports. The CPU controls each DUSART, and each DUSART is configured for an RS-232 interface only.

- Status indicating LEDs

  The front panel green LEDs indicate TXD and RXD status and are located on the left side of the module's front panel. Each group of two LEDs is labeled 1 to 8. The upper LED in each group is labeled TXD and the lower LED labeled RXD.

  When the TXD LED lights up, data transmits from the port that corresponds to the LED number. When the RXD LED lights up, the corresponding port receives data.

  The STATUS LED is a two-color LED that indicates the status of the unit. When the LED is green, the unit is operating properly. When the LED is red, the unit is in a reset condition.

- Dual port RAM

  The dual port RAM supports communication between the two LinkMaster sections and provides electrical separation for the two microprocessor buses. The microprocessors in each MPP section have independent access to the RAM.

PORT DESCRIPTION

Each port can handle up to a maximum of 32 channels, depending upon the protocol interface and/or database requirements. A port can have any combination of PVC LCNs or SVC addresses. For example, if the packet size is 128, a port can have 15 PVC LCNs and 17 SVC addresses. You do not have to define all 32 port entries. Refer to Table A.

SVC Operation

A pool assigns LCNs to a call depending on whether the unit is DTE or DCE. The LinkMaster routes the call based on the called address. Once the call is established the LinkMaster routes data based on LCN mapping. When the call clears the LCN is no longer assigned to the port.

Logical Channel Translation

Logical channel translation lets the LinkMaster communicate with external equipment types that require identical LCN assignments. Fig. 2 shows two network elements (NEs) using LCN 1. The LinkMaster can send information from the NEs to the NMA. The LinkMaster cannot route information from the NMA to the NEs.

Route information from the NMA to the NEs by defining entries in an LCN translation table. For example, you can define LCN 1 of port 1 as 101 and LCN 1 of port 5 as 501.

The LinkMaster accepts incoming calls on any LCN channel defined as SVC and assigned to the module database. You can select any LCN in the range of 1 to 4,095.

TABLE A - PACKET SIZE AND NUMBER OF ENTRIES

PACKET SIZE	NUMBER OF ENTRIES (PVC LCNS OR SVC ADDRESSES
128	32
256	32
512	32

FIG. 2 - LOGICAL CHANNEL TRANSLATION

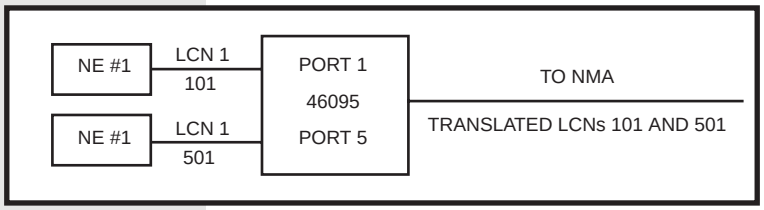

APPLICATION INFORMATION

NOTE:
RS-232 can be used for speeds up to 19.2K. Use V.35 for higher speeds.

The 46095 module interfaces multiple network elements to an X.25 network. The module combines multiple ports of TL1 asynchronous equipment and X.25 synchronous equipment into a single high-speed X.25 network port. The network port interfaces to an X.25 packet data network through a V.35 or RS-232 interface and communicates at speeds up to 64 kilobits per second.

Refer to Fig. 3 for an example application. The 46095 module combines multiple ports of network elements into a single X.25 port. The single port from the 46095 module communicates with an AI Switch, AT&T Datakit, Telematics ACP, etc.

The PVC-to-SVC conversion application shows the SVC side going either to other manufacturer's equipment or to the NMA center. Straight SVC or PVC applications can be connected directly into the NMA center. In the cascade application, eight 46095 modules can be connected to the data ports of one 46095 module. This increases the number of data ports to 64. (Only one cascade module is shown.)

FIG. 3 - EXAMPLE APPLICATION, B11-46095 LINKMASTER MODULE

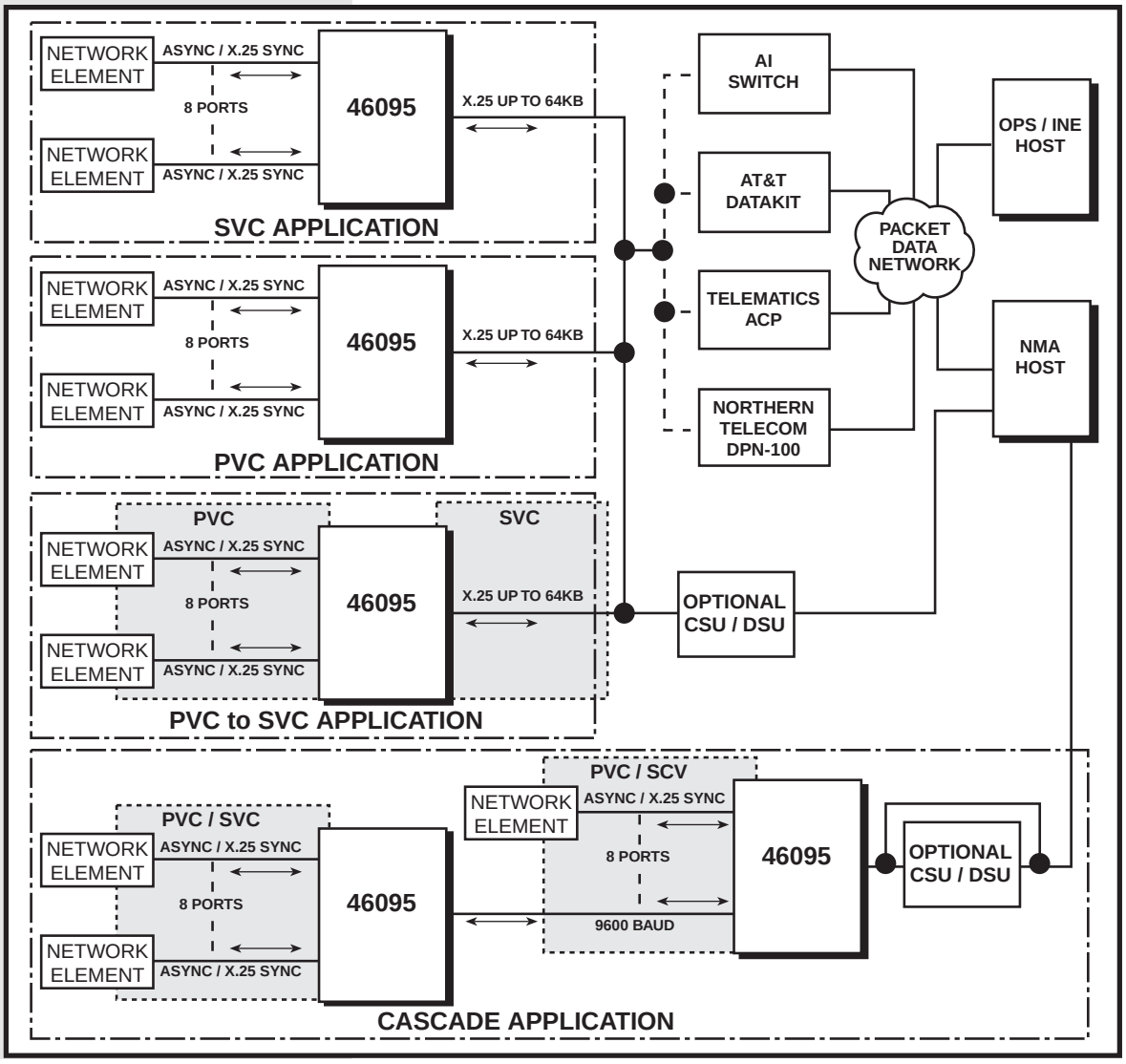

INSTALLATION

Installation consists of setting the straps and switch settings, wiring the pin connectors, installing the LinkMaster in the shelf and configuring the LinkMaster.

1. Set the straps.

Refer to Table B and Fig. 4. Strap P4 is for battery backup. Use position **EN** for battery backup and position **DIS** for storage.

Table B - Strap Options, B11-46095 LinkMaster Module

X.25 PORT			
INTERFACE	**DESCRIPTION**	**STRAP POSITIONS**	**EDGE CONNECTOR PINS**
TD	RS-232 Transmit Data	P9-23	20
RD	RS-232 Receive Data	P14-23 & P6-23	21
RTS	RS-232 Request to Send	none	15 & 23
CTS	RS-232 Clear to Send	none	25
DCD	RS-232 Data Carrier Detect	none	16 & 27
DSR	RS-232 Data Set ready	none	29
DTR	RS-232 Data Terminal Ready	none	31
RING IND	RS-232 Ring Indicator Input	none	30
RXC	RS-232 Receive Clock Input	P2-23 & P3-23	37
TXC	RS-232 Transmit Clock Input	P1-23 & P5-23	41
TX–	V.35 Transmit Output	P9-12	20
TX+	V.35 Transmit Output	none	22
RX+	V.35 Receive Input	P6-12 & P14-12	21
RX–	V.35 Receive Input	P6-12	19
RXC+	V.35 Receive Clock Input	none	33
RXC–	V.35 Receive Clock Input	P2-12 & P3-12	37
TXC+	V.35 Transmit Clock Input	none	39
TXC–	V.35 Transmit Clock Input	P1-12 & P5-12	41

FIG. 4 - SWITCH AND STRAP LOCATIONS, B11-46095 LINKMASTER MODULE

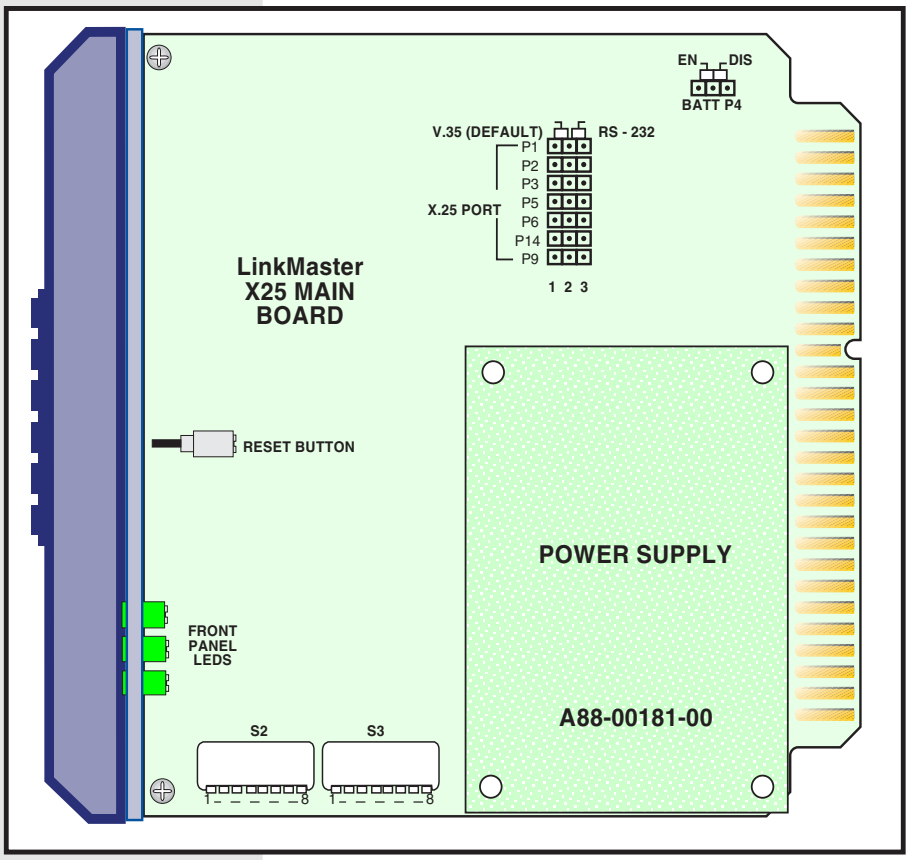

2. SET THE SWITCHES.

Refer to Fig. 4 and Tables C and D. These tables contain settings for switches S2 and S3 on the main section. The data port expansion section also has one eight-lever DIP switch. All switches on this eight-lever DIP switch should be left OFF.

TABLE C - SWITCH SETTINGS, B11-46095 LINKMASTER MODULE (UP IS OFF)

X.25 SECTION / B11-46095-01			
DIP SWITCH 2:			
S2-1 Through S2-2	NOT USED		
IF S2-3 OFF:			
S2-5, S2-6	Baud Rate for Co-locator/Data Port	S2-5	S2-6
	1200	OFF	OFF
	2400	ON	OFF
	9600	OFF	ON
	19200	ON	ON
IF S2-3 ON:			
S21-5, S2-6	Baud Rate for Co-locator/Data Port	S2-5	S2-6
	9600	OFF	OFF
	19.2k	ON	OFF
	38.4k	OFF	ON
	115.2k *	ON	ON
IF S2-4 OFF:			
S2-7, S2-8	Baud Rate for Printer Port	S2-7	S2-8
	1200	OFF	OFF
	2400	ON	OFF
	9600	OFF	ON
	19200	ON	ON
IF S2-4 ON:			
S2-7, S2-8	Baud Rate for Printer Port	S2-7	S2-8
	9600	OFF	OFF
	19.2k	ON	OFF
	38.4k	OFF	ON
	115.2k *	ON	ON
DIP SWITCH 3:			
S3-1 Through S3-6	DCPF Address	Refer to Table D	
S3-7	Printer Port Mode		
	DCPF (Default Setting)	OFF	
	Printer Syntax	ON	
S3-8	Normal Operation	OFF	
	Erases Entire Memory	ON	
Note:	DIP switches S3-1 through S3-6 are used for downloading the Operating and T/Shell Software through the printer port		
Note:	DIP switch S3-8 operates in conjunction with the front panel reset button		
DATA PORT EXPANSION SECTION / B11-46095-01			
DIP Switch 1 (SW1)	Clear front-end memory by setting Switch S1-1 ON (DOWN) Otherwise all switches should remain in the OFF (UP) position		

* Requires high-quality cable no more than 5 meters in length.

UPDATED

TABLE D - DCPF ADDRESS SWITCH SETTINGS, B11-46095 LINKMASTER MODULE

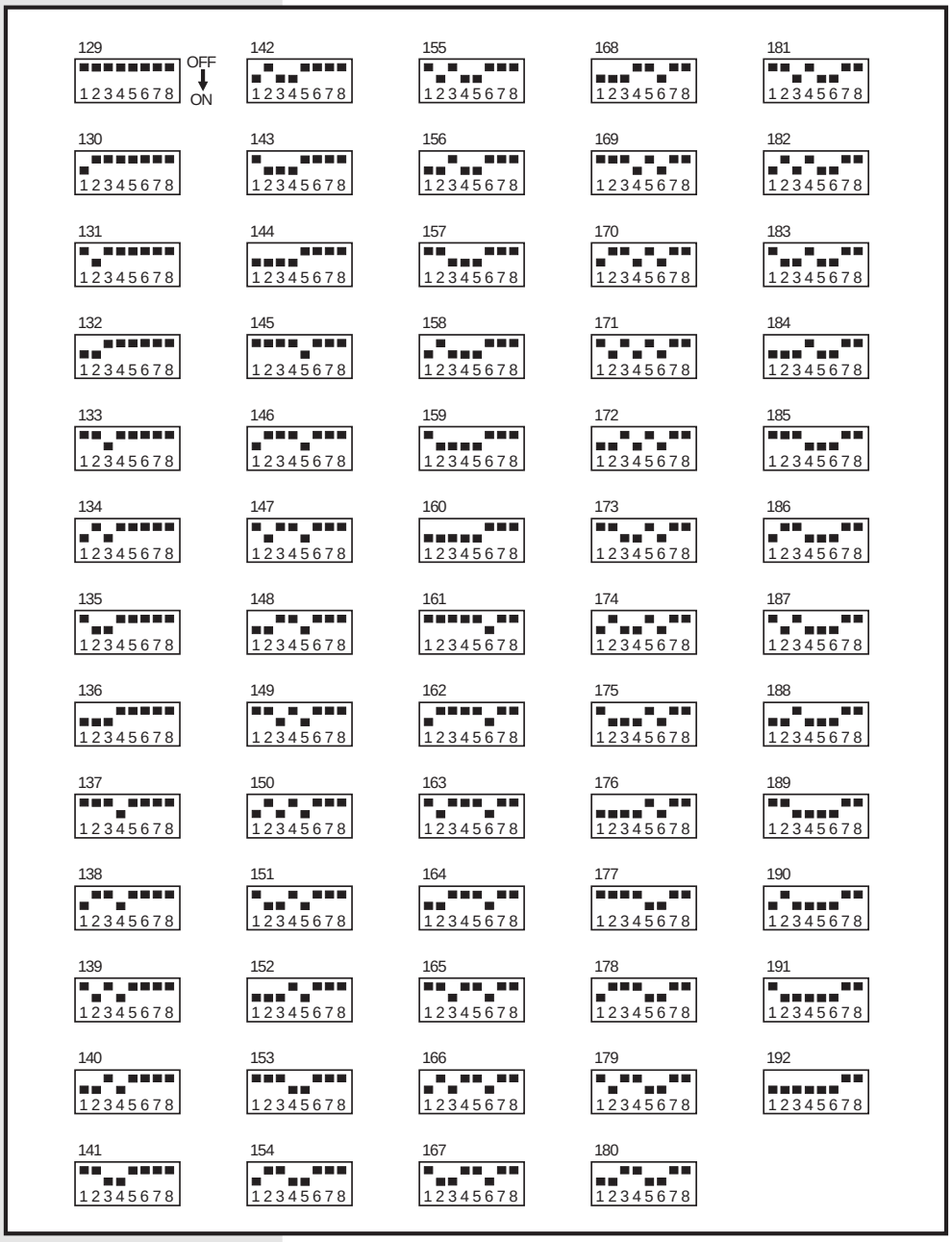

3. WIRE THE PIN CONNECTORS.

NOTE:

When you wire the X.25 circuit board, you can use pin 16 or 27 for the X.25 port DCD. You can use pin 15 or 23 for the X.25 port RTS. Pin 17 is a required ground even though there is more than one ground on both circuit boards.

Normally the factory wires the 56-pin edge connectors for the slot. If you wire the connectors, refer to Figs. 5 and 6 for module pin wiring assignments.

When you wire the data ports 1 to 8 to external equipment, use TXD, RXD, RTS and CTS for proper asynchronous communication. Use TXD, RXD, RTS, CTS, TXC and RXC for proper synchronous communication.

FIG. 5 - EDGE CONNECTOR PIN ASSIGNMENTS (CONNECTOR ON LEFT WHEN VIEWED FROM REAR OF SHELF), B11-46095 LINKMASTER MODULE

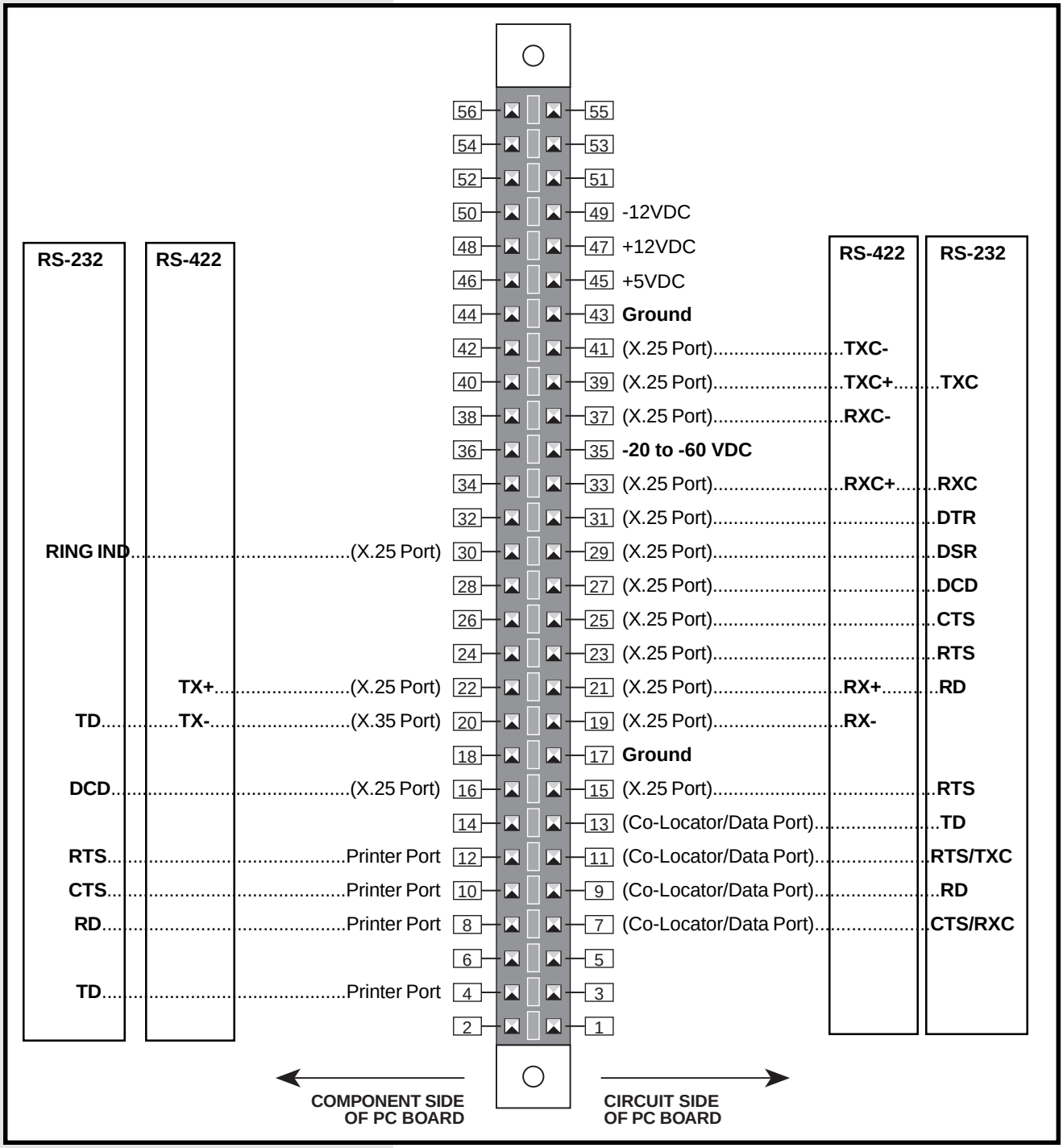

FIG. 6 - EDGE CONNECTOR PIN ASSIGNMENTS (CONNECTOR ON RIGHT WHEN VIEWED FROM REAR OF SHELF), B11-46095 LINKMASTER MODULE

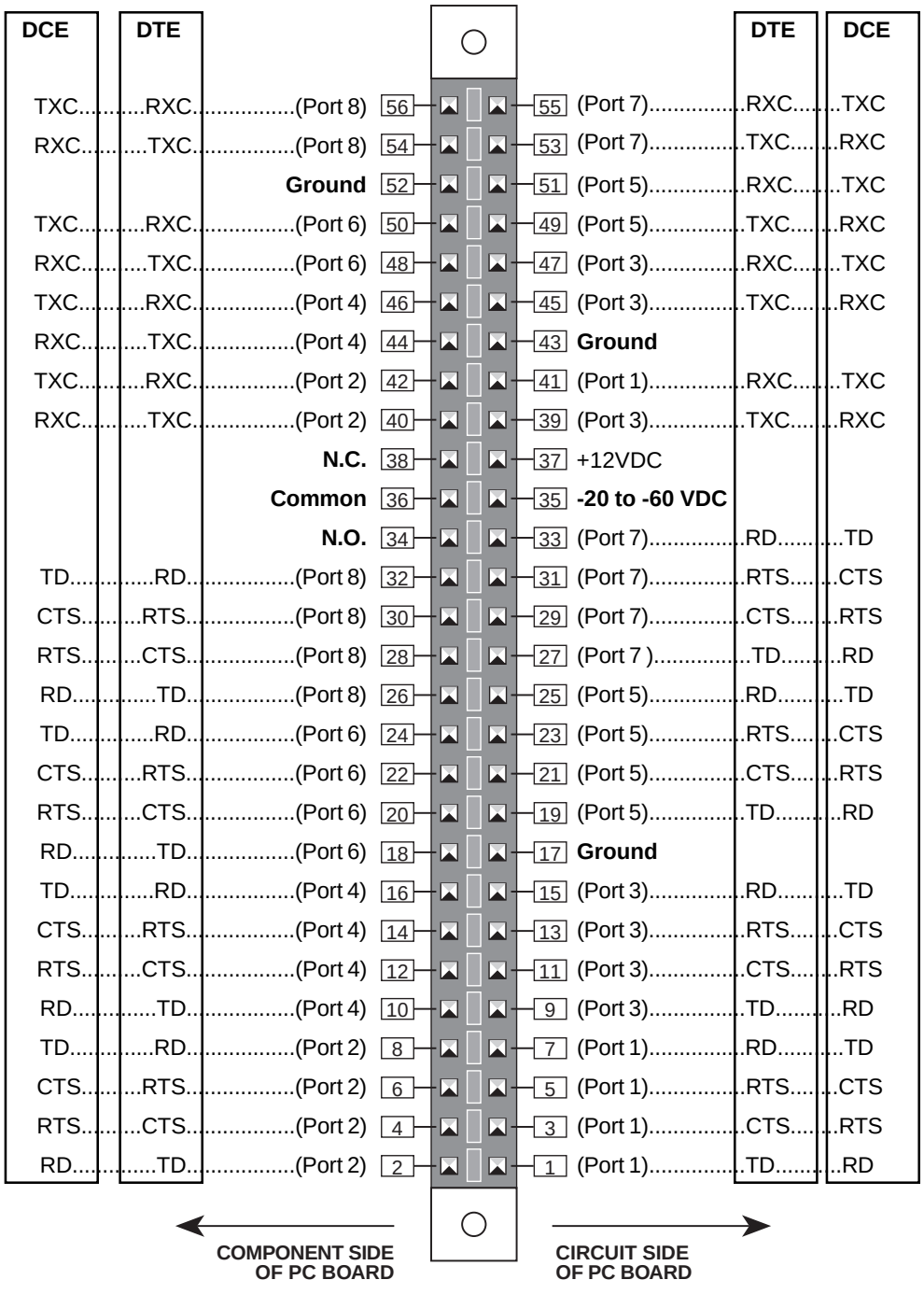

4. CONFIGURE THE LINKMASTER.

1. Configure the LinkMaster as follows:

NOTE: *The 46095 LinkMaster can be configured using T/Shell Editor 46606 and the Printer/Configuration port. Additionally, the 46095 can be provisioned over the Virtual Access Interface over the high speed X.25 network connection. Refer to the* **Virtual Access/Alarm Messages** *section of the 46606 Asynchronous/Synchronous Multi-Port X.25 Interface Editor manual.*

2. Install the 46606 Asynchronous/Synchronous Multi-Port X.25 Interface Editor (46606) on your computer hard drive as instructed in the 46606 manual.
3. Exit the T/Shell program and return to DOS.
4. Insert the 46606 operating software disk in your computer diskette drive. Make sure the DOS prompt shows you are in the TSHELL directory.

   Copy the 46606 files by typing **COPY A:*.*** then press Enter. (If the disk is in a different drive, type the letter of the drive instead of drive A.) After you copy the 46606 files, remove the disk from the drive and store the disk in a safe place.

   Start the T/Shell program by typing TSHELL (make sure you are in the TSHELL directory) then press Enter. Select the X.25 Sync/Async Editor option from the Master Menu. Configure the LinkMaster by referring to the 46606 manual.

NOTE:
You must download the back-end operating software, the front-end operating software, and database in that order.

5. Connect your computer to the X.25 module printer port. Refer to the block diagram of the shelf you installed the printer port in. Return to the X.25 System menu.

   Select the Parameters option and make sure you select the correct COM port. Set the baud rate at the same rate you selected with switches S2-4, S2-7 and S2-8. Refer to Table C. Leave all other parameters set to their default settings.

NOTE:
If there is more than one file, select the X25VXXX.ABS file. If there is more than one X25VXXX.ABS file, choose the one with the highest number where the Xs are.

   Select the System Definition option from the X.25 System menu. Select Edit Password/Config then select Edit X.25 Address. Make sure the address is the same as the module DIP switch settings (switches S3-1 to S3-6).

   Return to the X.25 System menu and select Transfer. Select BE. A list of the operating software pops up. Select the X25VXXXX.ABS file from the release disk for downloading the back-end operating instructions.

   When you finish downloading the Transfer window pops up. Select FE. A list of Flash software pops up. Select the FLASH.HEX file for downloading the front-end operating instructions. When you finish downloading the two operating software programs, download the database created with T/Shell.
6. When you complete the transfer, the LinkMaster begins communicating.

TROUBLESHOOTING

If the back-end software (.ABS file) or the front-end software (.HEX) file does not download to the 46095 LinkMaster, clear the back-end or front-end memory and download again.

If the T/Shell database file does not download to the 46095 LinkMaster, clear the back-end memory, redownload the back-end software and download again.

You can clear the back-end and front-end memories individually or at the same time.

TO CLEAR BACK-END MEMORY:

1. Turn off power to the module.
2. Remove the module from the shelf. Place switch S3-8 in the ON (down) position. Refer to Fig. 4.
3. Put the module back in the shelf and turn on the power. After about ten seconds, turn the power off again.
4. Remove the module from the shelf and place switch S3-8 in the OFF (up) position.
5. Put the module back in the shelf and turn on the power.

TO CLEAR FRONT-END MEMORY:

1. Turn off power to the module.
2. Remove the module from the shelf. Place switch S1-1 in the ***data port expansion section*** in the ON (down) position. Refer to Fig. 4.
3. Put the module back in the shelf and turn on the power. After about ten seconds, turn the power off again.
4. Remove the module from the shelf and place switch S1-1 in the OFF (up) position.
5. Put the module back in the shelf and turn on the power.

OPERATION

Operation of the 46095 LinkMaster mostly consists of observing the front panel LEDs.

The front panel green LEDs indicate TXD and RXD status and are located on the left side of the LinkMaster front panel. Each group of two LEDs is labeled 1 to 8. The upper LED in each group is labeled TXD and the lower LED labeled RXD.

When the TXD LED lights up, data transmits from the port that corresponds to the LED number. When the RXD LED lights up, the corresponding port receives data.

The STATUS LED is a two-color LED that indicates the status of the unit. When the LED is green, the unit is operating properly. When the LED is red, the unit is in a reset condition or there is a CPU failure.

A group of three status indicating LEDs are in the lower right hand corner of the front panel. The top LED, labeled X.25, flashes when a link is established and the X.25 port transmits data. The middle LED, labeled DATA, flashes when the co-locator port is active and transmitting data. The bottom LED, labeled PRINTER, indicates when the printer port transmits data.

The reset button is recessed which prevents accidental resets.

Use the LinkMaster printer syntax for maintenance and monitoring. See the ***Printer Syntax*** chapter for printer syntax commands.

NOTE:

On an asynchronous port, the TXD and RXD LEDs are off until data is transmitted or received.

On a synchronous port, the LEDs are on steady as long as a clock signal is being transmitted or received. When data is transmitted or received, the LEDs flash.

PRINTER SYNTAX

To monitor and maintain of the 46095 LinkMaster, use Printer Syntax.

GETTING STARTED

PRINTER SYNTAX MODE

To use Printer Syntax commands to communicate directly with the 46095 LinkMaster, you must set DIP switch S3-7 in the ON position (down). You can then use a dumb terminal or the T/Shell Terminal Emulator to communicate to the 46095 LinkMaster. Refer to Table C for DIP switch settings.

NOTE:

Be sure the 46095 LinkMaster has the S3-7 DIP switch in the OFF (default) position. Verify that the baud of the computer (refer to the X.25 Parameters chapter) is the same as switch settings S2-4, 7 & 8 on the 46095 LinkMaster.

DCPF ADDRESSING MODE

The Switch command in the 46606 Asynchronous/Synchronous Multi-Port X.25 Interface Editor software allows you to communicate with a 46095 LinkMaster using DCPF mode addressing.

To use the DCPF addressing mode:

1. Start the 46606 software program.
2. Select the *X25sync Editor* option from the Master Menu.
3. Press F2. The Terminal Mode on Given X25 Address window appears:

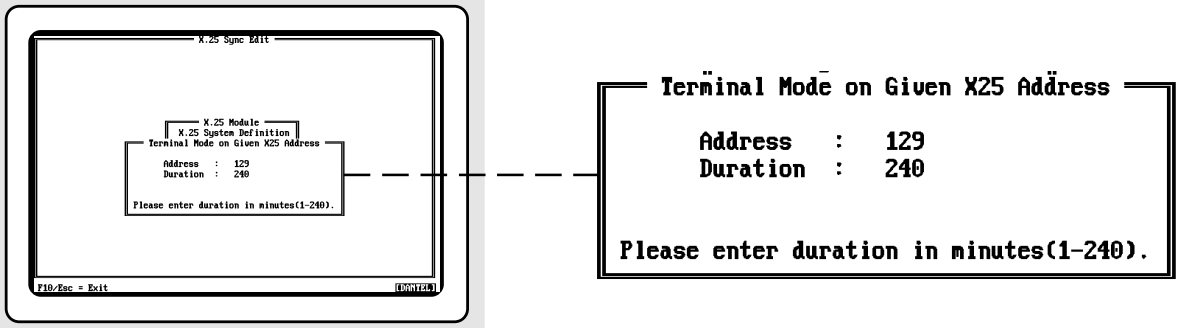

4. In the *Address* field, enter the address of the 46095 LinkMaster with which you want to communicate. Acceptable values are 129-192. The address must be the same as the address of the 46095 LinkMaster as set by switches S3-1 through S3-6.
5. Press Enter.
6. In the *Duration* field, enter the length of time that you want to remain in the Printer Syntax mode. Acceptable values are 1-240 minutes. At the end of the time period, the mode returns to DCPF.
7. Press Enter.
8. Communicate with the 46095 LinkMaster using the commands in this chapter.

ENTERING COMMANDS

After you type each command on the terminal, you must press the Enter key in order to execute the command. The screen displays an *X.25>* prompt to show it's ready for you to enter a command.

The first command you should enter is UNLOCK. This command unlocks the system so most of the other commands can be entered. Type UNLOCK and press Enter. If there is a password in the system, you must enter it at the prompt in order to unlock the system. If a password is not in the system, you may enter one at this time. Refer to the Password command in this section.

When a hyphen is used in a command, be sure you insert a space on each side of the hyphen. For example: LCN - SHD. When a hyphen is used in a command, you may also see an *n* for input at the prompt. Depending upon the application, enter the number of the port or channel number in place of the *n* character in the command. For example: LCN n SHD could be entered as LCN 5 SHD.

Error Message

If an incorrect command is issued to the system, the message *Invalid Command* appears on the terminal screen. When this happens, enter the correct command.

Help Screen

To display a list of the commands available in the Printer Syntax, type HELP and press Enter.

Printer Syntax Commands

The following is a list of printer syntax commands available through the 46095 LinkMaster printer port with examples of output responses. After typing a command (Input at Prompt), press Enter.

COLTR ON/OFF

Purpose: Activates/Deactivates the co-locator port.

Input At Prompt:
COLTR ON
COLTR OFF

Output Response: None

CONF

Purpose: Displays the system configuration of the 46095 LinkMaster.

Input at Prompt: CONF

Output Response:
PS Time (in seconds) : 0
DCPF Address : 129
TL1 TIME : 93-01-01 12:00:25
SID : DANTEL
Int PVC TL1 : 4095
Svc TL1 (1) = NONE
Svc TL1(2) = NONE

DATE (CURRENT DATE)

Purpose: Displays the current date.

Input at Prompt: DATE

Output Response: Date 15-APR-1996

DATE (CHANGE DATE)

Purpose: Changes the date.

Input at Prompt: DATE 09-SEP-1993

Output Response: None

DTE SHD

Purpose: Displays the current SVC addresses assigned to the synchronous X.25 ports.

Input at Prompt: DTE SHD

Output Response: PORTS WITH X25 AND PS PROTOCOL AND THEIR ASSOCIATED SVC ADDRESSES

FORMAT-> OFFSET,ADDRESS,LCN,STATE
PORT 0 :
PORT 1 : (2) 5551000, 0, RESET
(3) 5552000, 0, RESET
PORT 2 :
PORT 3 :
PORT 4 :
PORT 5 :
PORT 6 :
PORT 7 :
PORT 8 :

DTE SYS

Purpose: Displays SVC asynchronous port assignments.

Input at Prompt: DTE SYS

Output Response:

ADDRESS DISPLAY FORMAT	:	DTE.EXTENSION
PORT LOCAL DTE ADDRESS	:	5551000.0
3 REMOTE DTE ADDRESS	:	7771000.0
PORT LOCAL DTE ADDRESS	:	5552000.0
4 REMOTE DTE ADDRESS	:	7772000.0

FRM STA

Purpose: Displays the current link (frame) layer status (layer 2).

Input at Prompt: FRM STA

Output Response:

```
Local frame V(s),V(r)    :    1, 1
Local station state      :    Normal data transfer  [0]
Remote station state     :    Normal data transfer  [0]
Data link state          :    Information transfer [0]
Last ack. frame seq.     :    1
Unack. frame count       :    0
```

FRM SYS

Purpose: Displays the current link (frame) layer configuration (layer 2). This is a key command for link status troubleshooting.

Input at Prompt: FRM SYS

Output Response:

```
WINDOW   T1   T2   T3   T4   N1   N2   UNIT_TYPE   OPERATING_MODE
     2    3  0.0   12    0 1080    7    DTE(3/A)  NORMAL OPERATION

IDLE LINK DISCONNECTION     :     NOT ALLOWED
LINK SETUP INITIATOR        :     ACTIVE
FRM TRANSMITTER BUFFER      :     NOT FULL
LEVEL 2 LAYER               :     READY
```

HELP

Purpose: Displays available commands.

Input at Prompt: HELP

Output Response:

```
       *******     AVAILABLE COMMANDS     **********
DTE :- DTE address table                LCN :- logical channel table
PAD :- port data table                  FRM :- link layer attribute table
SWI :- display dip switches             VER :- displays software version
DBG :- diagnostics on/off               MDM :- x25 port modem control
LOC :- lock the system                  PKT :- packet layer optional parameters
UNL :- unlock the system                ERR :- errors
DATE :- current date                    CONF :- X25 configuration
TIME :- current time                    COLTR :- Co-Locator Port on/off
```

LCN - POOL

Purpose: Displays the pool of available LCNs for each port.

Input at Prompt: LCN - POOL

NOTE: *Displays all defined ports.*

Input at Prompt: LCN n POOL

NOTE: *Enter the port number in place of the* n *character in the command. The range of the port number (n) is between 1 and 8. The port number entered must be defined in the database.*

Output Response:

```
SVC POOLS  {* = Not Available}

PORT # : 1
3( )  4( )  0( )  0( )  0( )  0( )  0( )  0( )
0( )  0( )  0( )  0( )  0( )  0( )  0( )  0( )
0( )  0( )  0( )  0( )  0( )  0( )  0( )  0( )
0( )  0( )  0( )  0( )  0( )  0( )  0( )  0( )

PORT # : 2
3( )  4( )  0( )  0( )  0( )  0( )  0( )  0( )
0( )  0( )  0( )  0( )  0( )  0( )  0( )  0( )
0( )  0( )  0( )  0( )  0( )  0( )  0( )  0( )
0( )  0( )  0( )  0( )  0( )  0( )  0( )  0( )
```

LCN - SHD

Purpose: Displays the LCN Translation Table.

Input at Prompt: LCN - SHD

NOTE: *Displays all defined ports.*

Input at Prompt: LCN n SHD

NOTE: *Enter the port number in place of the* n *character in the command. The range of the port number (n) is between 1 and 8. The port number entered must be defined in the database.*

Output Response:

```
LCN TRANSLATION TABLE

PORT # : 1
0   0   0   0   0   0   0   0
0   0   0   0   0   0   0   0
0   0   0   0   0   0   0   0
0   0   0   0   0   0   0   0
```

CONTINUED . . .

```
PORT # : 2
3    4    0    0    0    0    0    0
0    0    0    0    0    0    0    0
0    0    0    0    0    0    0    0
0    0    0    0    0    0    0    0
```

LCN - STA

Purpose: Displays the logical channel status.

Input at Prompt: LCN - STA

NOTE: *Displays all defined channels.*

Input at Prompt: LCN n STA

NOTE: *Enter the channel number in place of the* n *character in the command. The range of the channel number (n) is between* ***1*** *and* ***4,096****. The channel numbers entered must be defined in the database.*

Output Response:

```
Tx/Rx Parameters        :        - RNR:P(s):unack pkts:window:pkt_size
Timers                  :        - timer:remaining time:retransmit count

LCN   STATE   TYPE   MODE          TX PARAMETERS    RX PARAMETERS
ACTIVE TIMERS
1       d1     PVC          Idle     0:0:0:2:128                0:0:0:2:128
        NONE

POOL SIZE 4240 [8320]; LVL3 1 - SYS RESET: 1; NMA: N
```

LCN - SYS

Purpose: Displays the LCN channel configuration.

Input at Prompt: LCN - SYS

NOTE: *Displays all defined channels.*

Input at Prompt: LCN n SYS

NOTE: *Enter the channel number in place of the* n *character in the command. The range of the channel number (n) is between* ***1*** *and* ***4,096****. The channel numbers entered must be defined in the database.*

Output Response: LOGICAL CHANNEL CONFIG. DATA

Total number of channels = 4

CONTINUED . . .

LCN	TYPE	CLASS	TX-WINDOW	TX-PKT	RX-WINDOW	RX-PKT	THROUGHPUT
1	PVC	BOTHWAY	2	128	2	128	1200
2	PVC	BOTHWAY	2	128	2	128	1200
3	SVC	BOTHWAY	2	128	2	128	1200
4	SVC	BOTHWAY	2	128	2	128	1200

LOCK

Purpose: To lock the system. No user interaction is processed until the system is unlocked.

Input at Prompt: LOCK

Output Response: SYSTEM IS LOCKED!

MDM SYS

Purpose: Displays the current configuration for interfacing with a modem.

Input at Prompt: MDM SYS

Output Response:

MODEM	CONTROL	SIGNAL	STATUS
RTS	CTS	DTR	DSR
OFF	OFF	OUTPUT I	NPUT

PAD - STA

Purpose: Displays PAD port status.

Input at Prompt: PAD - STA

NOTE: *Displays all defined ports.*

Input at Prompt: PAD n STA

NOTE: *Enter the port number in place of the n character in the command.*

Output Response:

PORT	CHANNEL	TYPE	STATE
0	0		Not in Service
1	1	(PVC)	DATA FLOW
2	0	(SVC)	Idle
.	.		Not in Service
.	.		Not in Service
8	0		Not in Service

PAD - SYS

Purpose: Displays the current configuration for the PAD port parameters.

Input at Prompt: PAD - SYS

NOTE: *Displays all defined ports.*

Input at Prompt: PAD n SYS

NOTE: *Enter the PAD port number in place of the n character in the command.*

PAD - SYS Output Response on Async ports:

```
PORT 0 IS NOT INITIALIZED!
1       BAUD    : 9600   RTS/CTS : OFF     PROTOCOL        :TL1
        PARITY  : NO     XON/XOFF TX: OFF  MESG_SIZE       :128
        DATA    : 8      XON/XOFF RX: OFF  TIMEOUT         :50
        STOP    : 1      EOM      : 59 , 0 , 0 , 0

USED LCN(S) : ( 0) 1

PORT 2 IS NOT INITIALIZED!
PORT 3 IS NOT INITIALIZED!
PORT 4 IS NOT INITIALIZED!
PORT 5 IS NOT INITIALIZED!
PORT 6 IS NOT INITIALIZED!
PORT 7 IS NOT INITIALIZED!
PORT 8 IS NOT INITIALIZED!
```

PAD - SYS Output Response on Sync ports:

```
PORT 0 IS NOT INITIALIZED!
1       BAUD : 9600  PROTOCOL : X25  PKT : 512  LVL3: READY
        ADDRESS: DCE  MODE : ACT  WIN : 7  CLOCK : INT       LVL2 : READY
        T1 : T2 : T3 : N1 : N2 : : 3 : 0 : 120 : 4152 : 7  T20 : 0
        USED LCN(S) : 1  2
2       BAUD : 9600  PROTOCOL : X25  PKT : 512  LVL3: READY
        ADDRESS: DCE  MODE : ACT  WIN : 7  CLOCK : INT       LVL2 : READY
        T1 : T2 : T3 : N1 : N2 : : 3 : 0 : 120 : 4152 : 7   T20 : 0
        USED LCN(S) : 3  4

PORT 3 IS NOT INITIALIZED!

4       BAUD : 9600  PROTOCOL : X25  PKT : 512  LVL3: READY
        ADDRESS: DCE  MODE : ACT  WIN : 7  CLOCK : INT  LVL2 : READY
        T1 : T2 : T3 : N1 : N2 : : 3 : 0 : 120 : 4152 : 7   T20 : 0
        USED LCN(S) : 5  6  7

PORT 5 IS NOT INITIALIZED!
PORT 6 IS NOT INITIALIZED!
PORT 7 IS NOT INITIALIZED!
PORT 8 IS NOT INITIALIZED!
```

NOTE: *The last line gives information about the LCNs assigned to the port. For example: ports 1 and 2 have entry 0 (zero) assigned as LCN channel 1.*

PAS (with new password added)

Purpose: Allows entering a password for the first time.

NOTE: *Enter a password of up to 8 characters.*

Input at Prompt: PAS

Output Response:
Enter New Password: **** (enter password)
Re-Enter New Password: **** (verify password)
PASSWORD ACCEPTED!

PAS (WITH PASSWORD CHANGE)

Purpose: Allows changing an existing password to a new password.

NOTE: *Enter a password of up to 8 characters.*

Input at Prompt: PAS

Output Response:
Enter Old Password : **** (enter original pwd)
Enter New Password : **** (enter new password)
Re-Enter New Password: **** (verify new pwd)
PASSWORD ACCEPTED!

NOTE: *The password is entered twice to verify that the first entry is the password entry that you intended.*

PKT STA

Purpose: Displays the system packet layer performance (layer 3).

Input at Prompt: PKT STA

Output Response: X.25 PERFORMANCE DATA (No. OF PACKETS)

TYPE	SENT	RECEIVED	RESET	CALL_REQUEST	REJ_RCVD	ERR_DATA_RCVD
1	0	0	0	0	0	0

HOUR COUNTER : 0

PKT SYS

Purpose: Displays the current packet layer configuration (layer3).

Input at Prompt: PKT SYS

Output Response:
AUTO CALL REQUEST : REFUSED
EXTENSION ADDRESS CODING METHOD : CCITT X.25 FORMAT

SWITCH

Purpose: Displays settings of switches S2 and S3 on the X.25 section of the 46095 LinkMaster. Switch S1 on the data port expansion section is not used so those switch positions are not shown.

Input at Prompt: SWI

Input at Prompt: SWITCH

Output Response:

	8	7	6	5	4	3	2	1
SW2	1	1	0	0	0	0	0	0
SW3	0	1	0	0	0	0	0	0

TIME (CURRENT TIME)

Purpose: Displays the current time.

Input at Prompt: TIME

Output Response: time 00:00:00

TIME (CHANGE TIME)

Purpose: Changes the time.

Input at Prompt: TIME 10:51:57

Output Response: None

UNLOCK

Purpose: Unlocks the system so that it will accept commands.

Input at Prompt: UNL

Output Response: NO PREVIOUS PASSWORD - SYSTEM IS UNLOCKED

VERS

Purpose: Displays the 46095 LinkMaster software version.

Input at Prompt: VERS or VER

Output Response: Software 46606-02 for unit 46095-00

B A C K E N D
Software Revision Major 1
Software Revision Minor 0.0

F R O N T E N D
Software Revision Major 1
Software Revision Minor 0.0

TECHNICAL SPECIFICATIONS

DESCRIPTION	VALUE
PHYSICAL	
Input Voltage Range	-20 to -60 VDC
Input Current (maximum)	240 mA
Heat Dissipation	37.7 Btu/Hr
Weight	16 ounces
Physical Dimensions	2.8"W x 6.0"D x 5.6"H
Operating Temperature Range	0° to 55° C.
X.25 PHYSICAL LAYER	
Interfaces	V.24 (RS-232-C), V.35, full duplex, continuous carrier, DTE
Speeds V.24 (RS-232-C) V.35	 1200, 2400, 4800, 19.2K bps, auto-selectable 1200, 2400, 4800, 19.2K, 38.4K, 48K, 56K,64K bps, auto-selectable
X.25 LINK LEVEL	
Framing	HDLC
Addressing	DTE or DCE
Procedure	LAPB (CITT 1984 X.25)
Parameters	**K** = 1 to 7, default 2 (Modulo 8); **N1** = 1080-4152, default 1080; **N2** = 2-16, default 7; **T1** = 2-20 seconds in 1 second increments; **T2** = Always 0; **T3** = 4-32 seconds
X.25 PACKET LEVEL	
Services	SVC and PVC, mixed per trunk
Numbering	Transparent (Modulo 8)
Data Fields	Octet aligned
LGN and LCN	**In** - will accept a call on any LCN; **Out** - user definable in range 1-4095
Max. VCS	256 system wide
Address Format	X.121 (up to 15 digits)
Max. Packet Size	512 bytes
"T" Parameters	All relevant DTE/DCE parameters are supported at values stated in
	1984 CCITT X.25 recommendations
PERFORMANCE	
Throughput	1000 packets per second based on 128-byte packet size
Flags	Single flag between frames
DATA PORTS	
Number of Ports	8
Interface	V.24 (RS-232-C) Asynchronous/Synchronous (LAPB) Mode
Speeds	1200, 2400, 4800, 9600 bps
LCN's per Port	Up to 32
PRINTER & CO-LOCATOR PORTS	
Interface	V.24 (RS-232-C) Asynchronous Mode
Speeds	1200, 2400, 9600, 19.2K, 38.4K, 115.2K bps
Format	8 data bits, 1 stop bit, no parity
INDICATORS & DIP SWITCHES	
Port Activity LED's	Transmit LED's on X.25, Data, and Printer Ports Transmit and Receive LED's on eight Data Ports
Unit Status LED	Green for unit normal; Red for unit reset/failure
DIP Switches	DCPF address setting, printer mode, and baud rate

WARRANTY

LIMITED WARRANTY

The Seller warrants that the standard hardware products sold will be free from defects in material and workmanship and perform to the Seller's applicable published specifications for a period of 18 months for hardware, and 3 months for software, from the date of the original invoice. The liability of the Seller hereunder shall be limited to replacing or repairing, at its option, any defective products which are returned F.O.B. to the Seller's plant, (or, at the Seller's option, refunding the purchase price of such products). In no case are products to be returned without first obtaining permission and a customer return authorization number from the Seller. In no event shall the Seller be liable for any consequential or incidental damages.

Equipment or parts which have been subject to abuse, misuse, accident, alteration, neglect, unauthorized repair or installation are not covered by warranty. The Seller shall make the final determination as to the existence and cause of any alleged defect. No warranty is made with respect to custom equipment or products produced to the Buyer's specifications except as specifically stated in writing by the Seller in the contract for such custom equipment.

This warranty is the only warranty made by the Seller with respect to the goods delivered hereunder, and may be modified or amended only by a written instrument signed by a duly authorized officer of the Seller and accepted by the Buyer.

Warranty and remedies on products not manufactured by the Seller are in accordance with warranty of the respective manufacturer. THE SELLER MAKES NO OTHER WARRANTY OF ANY KIND WHATSOEVER, EXPRESSED OR IMPLIED; AND ALL IMPLIED WARRANTY OF FITNESS FOR A PARTICULAR PURPOSE WHICH EXCEEDS THE AFORESAID OBLIGATIONS IS HEREBY DISCLAIMED BY THE SELLER.

IN CASE OF DIFFICULTY

If you experience difficulty with this equipment, check the following, as appropriate:

1. **Switch settings**
2. **Signal levels**
3. **Software configuration**
4. **Connections between Dantel's equipment and your equipment.**

If there is still a problem, substitute equipment that is known to be good. For additional assistance, call Dantel's Technical Field Service Department weekdays, 6 A.M. to 5 P.M. pacific time:

1-800-4DANTEL (1-800-432-6835).

If a thorough checkout shows a piece of equipment has malfunctioned, you may return it to the factory. For repairs and emergency replacements, obtain a Return Material Authorization (RMA) number from the Customer Service Representative at **1-800-4DANTEL** (1-800-432-6835).

To ensure expedient processing of your order, provide a purchase order number and shipping and billing information when requesting an RMA number. Also, when the units are returned to Dantel, include a description of the failure symptoms for each unit returned. Send defective equipment to:

Dantel, Inc. • 2991 North Argyle Avenue • Fresno, California 93727-1388