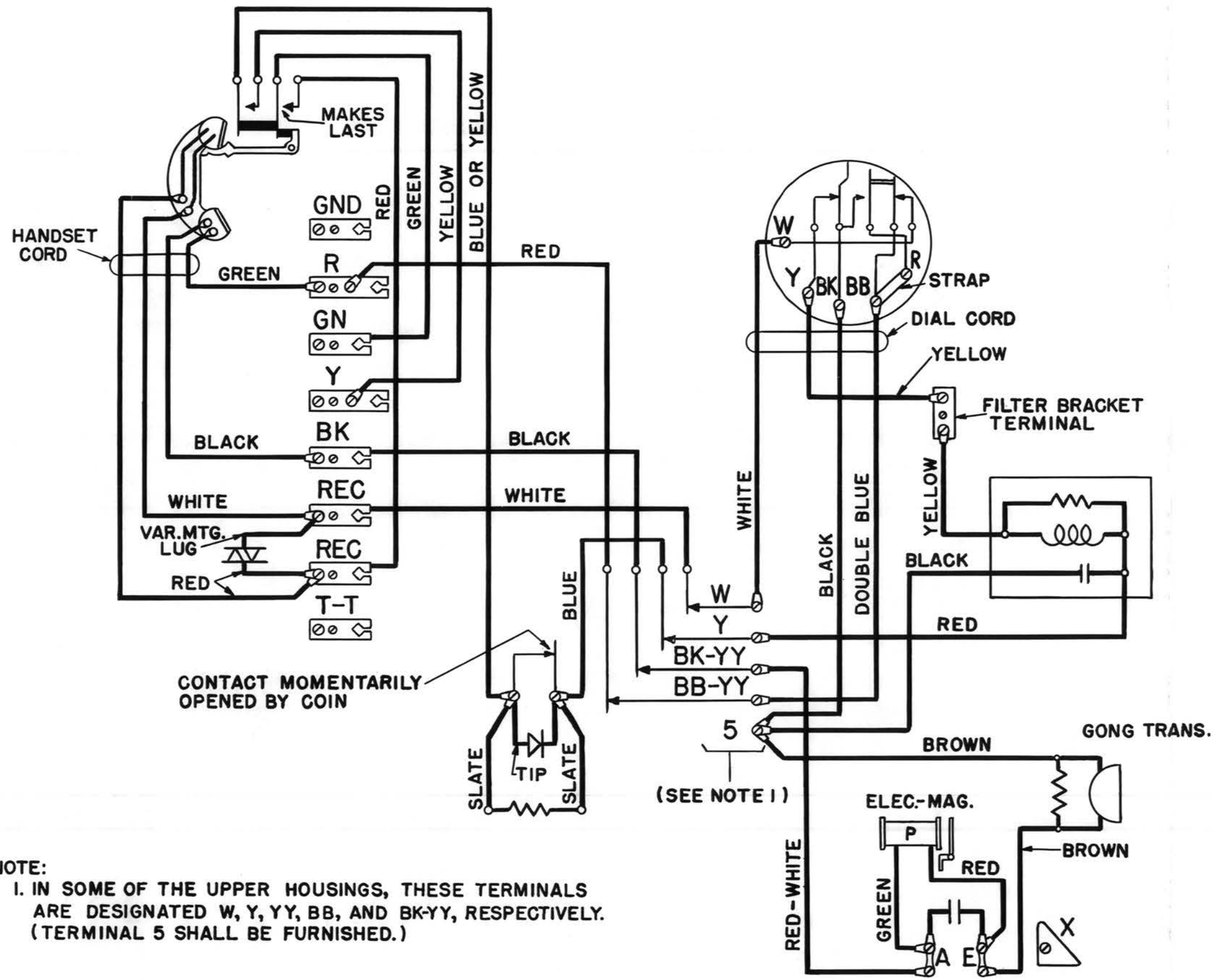

NOTE:
1. IN SOME OF THE UPPER HOUSINGS, THESE TERMINALS ARE DESIGNATED W, Y, YY, BB, AND BK-YY, RESPECTIVELY. (TERMINAL 5 SHALL BE FURNISHED.)

ISSUE	
5	BL-751472

P-

ENGR J.F. JESSICH		
DRAWN W.H. STEVENSON		
ISSUE 3 2-25-52		
REDRAWN FROM ISSUE 3 FIG. TITLE WAS SHOWN.		
S.E. RHA	HOW	FA
ISSUE 4 6-2-54	AGK	
REMOVED "E" TYPE FROM TITLE		
	AJB	
ISSUE 5 11-15-58		

USED ON	DWG

177G COIN COLLECTOR CONNECTIONS

SCALE

WESTERN ELECTRIC CO, INC
ENGINEER OF MANUFACTURE
CENTRAL OFFICE EQUIPMENT

BELL TELEPHONE LABORATORIES, INC

BL-751472
P-