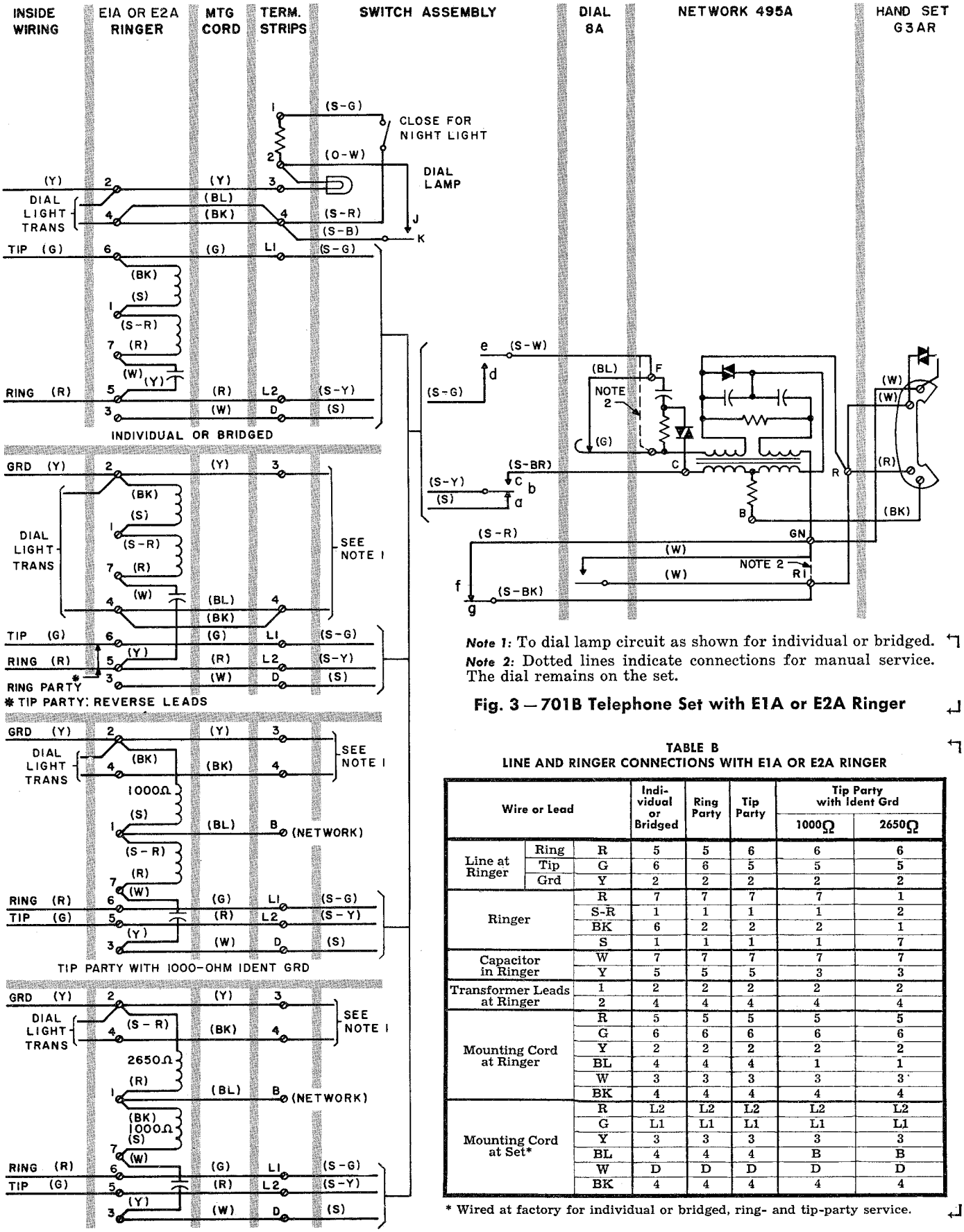

Note 1: To dial lamp circuit as shown for individual or bridged.

Note 2: Dotted lines indicate connections for manual service. The dial remains on the set.

Fig. 3 — 701B Telephone Set with E1A or E2A Ringer

TABLE B
LINE AND RINGER CONNECTIONS WITH E1A OR E2A RINGER

Wire or Lead			Individual or Bridged	Ring Party	Tip Party	Tip Party with Ident Grd 1000Ω	Tip Party with Ident Grd 2650Ω
Line at Ringer	Ring	R	5	5	6	6	6
	Tip	G	6	6	5	5	5
	Grd	Y	2	2	2	2	2
Ringer		R	7	7	7	7	1
		S-R	1	1	1	1	2
		BK	6	2	2	2	1
		S	1	1	1	1	7
Capacitor in Ringer		W	7	7	7	7	7
		Y	5	5	5	3	3
Transformer Leads at Ringer		1	2	2	2	2	2
		2	4	4	4	4	4
Mounting Cord at Ringer		R	5	5	5	5	5
		G	6	6	6	6	6
		Y	2	2	2	2	2
		BL	4	4	4	1	1
		W	3	3	3	3	3
		BK	4	4	4	4	4
Mounting Cord at Set*		R	L2	L2	L2	L2	L2
		G	L1	L1	L1	L1	L1
		Y	3	3	3	3	3
		BL	4	4	4	B	B
		W	D	D	D	D	D
		BK	4	4	4	4	4

* Wired at factory for individual or bridged, ring- and tip-party service.