STATION WIRING PLANS 110 AND 111

CONNECTIONS

1. GENERAL

1.01 This section covers the connections for station wiring plans 110 and 111. It is reissued to include connections for the improved four winding relay holding circuit.

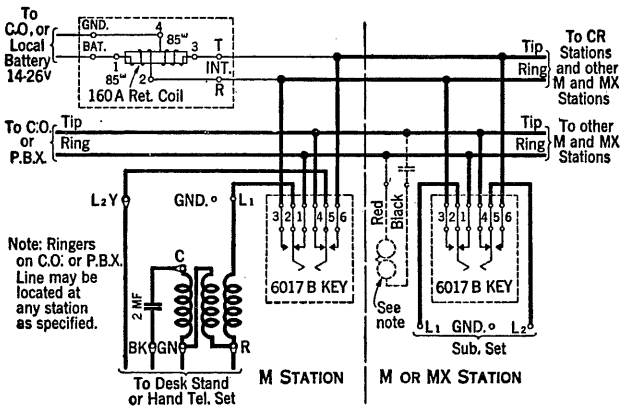

Fig. 1—Plan 110.

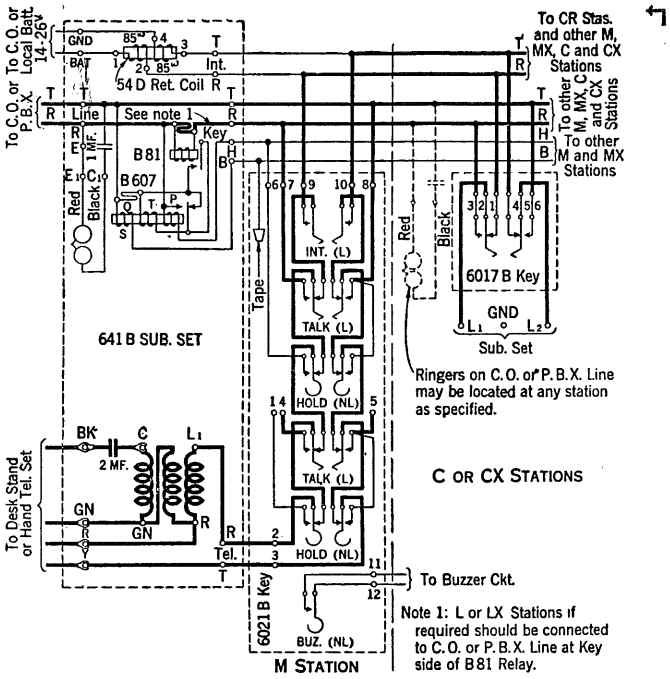

Fig. 2—Plan 111.

Copyright, 1938, by American Telephone and Telegraph Company
Printed in U. S. A.