CROSSBAR TANDEM SWITCHING SYSTEM

TRAFFIC CONTROL CONSOLE

CONTENTS PAGE

1. GENERAL 1
2. OPERATION OF THE TRAFFIC CONTROL CONSOLE 2
3. SIGNALING 10
4. COMMON SYSTEMS DOC CIRCUIT . . 11
5. SUBTENDING ESS OFFICES 12
6. SUBTENDING NO. 5 CROSSBAR OFFICES 12
7. SUBTENDING NO. 1 CROSSBAR OFFICES 13
8. SUBTENDING STEP-BY-STEP AND PANEL OFFICES 13
9. ASSIGNMENT GUIDELINES 14
10. ASSIGNMENT RECORDS 18
11. REFERENCES 18

Table

A. Traffic Control Console Features . . 21

Figures

1. Traffic Control Console 27
2. Cancel Short Sender Timing 29
3. Calibration of Sender Queue Levels . . 31
4. Alternate and Direct Route Cancellation . 33

CONTENTS PAGE

5. Manual Cancellation MSQL, MSQH, or MCAR, MCDR Keys 35
6. Cancel Individual Routes Methods 1 & 2 37
7. Individual Route Exclusions 40
8. Common Systems DOC Signal Circuit Schematic Diagram 41
9. List of Traffic Control Assignment . . . 43
10. Cancel or Exclude From Cancellation Direct Routed Traffic 45
11. Sample Order for Dynamic Overload Control Assignments in a No. 5 Crossbar Office . 47
12. Route Transfer DOC Controls 49

1. GENERAL

1.01 The traffic control console (TCC) is a network management tool which enables the crossbar tandem (XBT) network administrator to alleviate machine congestion and to control traffic entering the machine from its subtending offices or from other XBTs in a metropolitan network. The TCC is a metal cabinet about 4 feet high, 2-1/2 feet wide, and 4 feet deep. The sloping control panel at the top contains keys and lamps which indicate the status of the control equipment and subtending office traffic. A pen strip chart recorder may also be provided to give a continuous record of the office sender load. The TCC provides for both dynamic (automatic) and manual controls. The purpose of this practice is to describe each feature on the console and present enough related information

NOTICE
Not for use or disclosure outside the
Bell System except under written agreement

so the network administrator can select, assign, and implement appropriate controls.

1.02 This instruction also describes a signaling system called the common systems dynamic overload control (DOC) circuit which was developed to work with the TCC. This circuit receives the signals and transmits them to the individual offices. The circuit is installed in each end office building which has entities controlled by DOC. There are several advantages over the previous system which required individual signal circuits from the control tandem to each subtending entity. The traffic control console is a separate piece of circuitry and must be distinguished from the "receiving" DOC equipment which initiates controls on the tandem from higher ranking No. 4 or tandem machines. That DOC equipment will be covered in other No. 4 and XBT practices.

1.03 Effective network management contributes to the efficient use of switching machine capacity and interoffice facilities in order to complete the most messages possible. Experience has shown this can be accomplished best by blocking traffic, which has a poor chance to complete, as low in the network as possible. This has led to the development of the traffic control console and other local network management facilities. The TCC is appropriate for installation in both toll and local XBT machines.

1.04 The TCC accommodates control facilities for a maximum of 60 subtending offices or can originate 60 cancellation signals. All controls, except the timers and test equipment, are located on a panel mounted in a console or on a frame. This practice will refer to the console mounting. The console is usually installed in the network administration quarters near the traffic supervisory cabinet. The timer controls are located on a frame in the maintenance quarters.

1.05 The traffic control console performs the following dynamic (automatic) functions:

(a) Senses the immediate load on senders and initiates a signal to activate network controls in subtending offices when the load exceeds preselected thresholds. These signals are called sender queue low (SQL) and sender queue high (SQH). SQL is the lower of the two levels of sender load that is determined to be greater than the tandem can serve effectively. The SQL signal is generally sent via external circuits to the subtending offices to initiate cancellaton of alternate routing to the tandem or to limit access to the tandem trunk group for hard-to-reach (HTR) codes. SQH is the higher level of sender load determined to be greater than the tandem can serve effectively, recognizing that SQL has already limited access to the tandem for certain traffic. The SQH signal is generally sent both to the same subtending offices as well as to other offices to activate additional controls to reduce the load. The SQH controls are generally more encompassing than the SQL controls. They usually cancel direct-routed traffic to the tandem, make trunks busy or limit access to the tandem for easy-to-reach (ETR) codes.

(b) Senses the immediate load on the tandem markers and initiates network controls within the tandem to reduce the load on the markers. The control, cancel short sender timing (CSST) operates whenever all XBT markers are busy for a preselected interval. CSST cancels the reduced intersender timing interval and causes the tandem senders to wait the normal interval for a "sender attached" signal from the distant office before timing out and routing the call to reorder announcement (ROA). This reduces the ineffective load on the markers caused by short time-out calls routing to announcements and allows the marker to serve calls that may be completed. In addition, the traffic control console is arranged so these controls can be operated manually, regardless of the condition of the automatic sensing circuits.

1.06 Table A contains a list of the keys and lamps with paragraph references. Figs. 1 through 7 contain a diagram of the TCC control panel and list the sequence of key and lamp operation of each control. These figures should be duplicated and a complete set, appropriately marked, located at the console as a reference when implementing controls.

2. OPERATION OF THE TRAFFIC CONTROL CONSOLE

2.01 The TCC enables the network administrator to activate controls (internal and external) either dynamically or manually. Dynamic controls operate automatically when sensing equipment in the tandem recognizes the machine has reached a certain predetermined level of congestion. The same controls may also be operated manually by

the network administrator at any time regardless of the load being offered to the machine. The console should be left on dynamic operation most of the time and certainly when the office is unattended. The basic controls are:

(a) ***Internal:*** Cancel or prevent initiation of short sender timing. This is an action taken within the machine which applies direct relief when a marker queue detector senses congestion in the tandem (indicated by all XBT markers busy).

(b) ***External:*** Cancel traffic from subtending offices when delay in serving incoming traffic reaches certain predetermined levels. When there is an exchange of signals with the subtending offices, up to 40 controls may be put at a low level of delay (SQL) and 20 more at a high level of delay (SQH).

2.02 ***Master Switch:*** The master switch is a key, designated MS, located at the bottom center of the control panel. The MS key turns all the panel features on or off. A lamp in the key lights when the key is operated. Most of the keys on the console are locking keys, depress to operate, depress to release, and light when the key is operated.

2.03 ***Cancel Short Sender Timing:*** The TCC provides three ways to cancel short sender timing; automatic marker queue output, manual marker queue output, and manual cancellation. The controls are located on the right side of the control panel about halfway down and consist of four lamps and three keys (to the left of two sender calibration selectors). There are two timers, designated marker queue (MQ) and marker queue timer (MT) associated with the circuit. These are located on the control circuit frame. Paragraph 2.18 describes the timers and paragraph 9.10 explains the reasons for using and canceling short sender timing. It also gives guidelines for setting the marker queue timing.

2.04 ***CSST—Automatic MQ Control:*** Automatic CSST goes into effect when a marker queue detector senses all XBT markers have been busy for some interval of from 1 to 9 seconds (set on the MQ timer). Then, CSST remains locked in-effect for another interval of from 1 to 9 seconds (set on the MT timer). At the end of the MT timing, CSST will release if there is an idle marker. After setting the MQ and MT timers as described in paragraph 2.23 depress the MS key and the MS lamp lights. Next depress the MQ key and the MQ lamp lights. When all markers in the office are busy, the AMB (all markers busy) lamp lights on the TCC panel, and the MQ timer starts. If a marker becomes idle before the time elapses, the circuit returns to normal and no further action results. If all markers remain busy until the MQ time has elapsed, the MQA lamp on the console lights, the cancel short sender timing signal goes to the intersender timing circuit and then the CSST lamp on the panel lights. If the intersender timing circuit responds to the cancel signal, the STCK (short timing check) lamp on the panel also lights. If the circuit does not respond properly, the red CSTF (failed to cancel short sender timing) lamp, located on the far right opposite the marker queue controls, will light. AMB and CCST lamps may also appear on the traffic supervisory cabinet in the network administration quarters as well as in various locations in the maintenance quarters.

2.05 ***CSST—Manual MQ Controls:*** The marker queue circuit may be operated at any time by depressing the MMQ (manual marker queue) key. When depressed, the MMQ lamp lights. This gives a continuous AMB indication to the MQ and MT timers; then, after the MQ timing interval has elapsed, CSST goes into effect. Short sender timing is canceled until the control is manually released by depressing the MMQ key a second time, removing the AMB indication. Then, at the end of the MT timing, CSST is removed.

2.06 ***CSST—Manual Control:*** Operating the manual short sender MSST key, bypasses the timer circuits and sends the cancel SST signal directly to the intersender timing circuit. The MSST and CSST lamps light. If cancellation takes place, the STCK lamp lights. If not, the CSTF lamp lights. Short sender timing is canceled until the control is manually released by depressing the MSST key a second time.

2.07 ***Alternate and Direct Route Cancellation:*** The TCC has a combination of automatic (dynamic) and manual controls which give four ways to cancel alternate-routed traffic and four ways to cancel directed-routed traffic. The automatic controls are based on the tendency for incoming trunks to line up, or queue, waiting for an idle tandem sender during overload periods. The TCC controls are marked to indicate that with a low

level of sender queue (SQL), traffic entering the tandem from subtending offices on alternate routes can be canceled. With a high level of sender queue (SQH), traffic entering on direct routes can be canceled. Depending on the local office, the actual control may involve changing the route pattern, making a percentage of the tandem trunks busy, or activating a code blocking arrangement. For simplicity, this paragraph on the control hardware will refer to alternate and direct route cancellation. Most of the automatic controls are on the right side at the bottom of the TCC panel. Depending on the equipment ordered, controls may be provided for one or two sender groups, designated A and B. If two groups are provided, the controls are duplicated, each set consisting of four lamps, six keys and two potentiometers marked SQL and SQH. Directly above these controls, in the center, are two selectors marked T—CAL—U (Calibrate tens and units). Sixty lamps on the left side of the console are associated with both automatic and manual cancellation. The timers designated SQ, LT, and HT are associated with the circuit. These timers are located on the control circuit frame. Manual controls are available to initiate cancellation or exclude routes from automatic cancellation. These controls cover most of the left side of the console panel. The top four rows have 20 keys and lamps associated with direct route cancellation. The lamps are designated DCK and the keys MCD. The lamps and keys numbered 0 through 9 are associated with CDR relay 0 in the circuit and the lamps and keys numbered 10 through 19 are associated with CDR relay 1. Below these are eight more rows of lamps and keys associated with alternate route cancellation. These lamps are designated ACK and the keys MCA. The lamps and keys numbered 0 through 9 are associated with cancel alternate route (CAR) relay 0 in the circuit, 10 through 19 with CAR relay 1, 20 through 29 with CAR relay 2 and 30 through 39 with CAR relay 3. The panel is marked to show that when two sender groups are provided, half of these controls are associated with group A and half with group B. Eight cancellation control keys are provided, two associated with each group, ie, two keys with direct route sender group A, two with alternate route sender group A, etc. There are also several trouble lamps at the right of the calibration selectors. Most of these lamps are associated with the automatic cancellation circuitry and light to indicate a failure to operate or false operation. See paragraph 2.22. Paragraph 9 discusses traffic cancellation and gives guidelines for setting the sender queue levels and timing.

2.08 ***CAR—Cancel Alternate Route:*** Alternate-routed traffic is automatically canceled when two conditions are met. First the sender queue indicator finds a predetermined number of decade busy (DB) relays in the sender link and controller circuit operated (busy), and second, they remain operated for one to nine seconds, as set on the SQ timer. Then CAR remains locked in-effect for another interval of from 1 to 9 seconds, as set on the LT timer. After the LT timing, CAR releases if the number of operated DB relays is below the SQL level. Before calibrating or testing sender queue circuits, release the CAR and CDR keys so the circuits do not operate network controls and adversely affect traffic flow. Setting the SQ and LT timers sets up the sender queue low and high levels in the sender queue indicator as follows:

(a) Depress the MS (master switch) key at the console. The MS lamp lights.

(b) If you are using a load recorder, turn the RCD key, located above the CAL selectors, to position A, for sender group A.

(c) Operate the SQ key; the lamp lights.

(d) Operate the CAL key; the lamp lights.

(e) Turn the CALT and CALU selectors (calibrate tens and units) to the level you want to trigger sender queue low. The selectors are numbered from 0 to 9, so you can select any number from 0 to 99.

(f) Turn the SQL potentiometer located at the bottom of the panel to the point where the SQL lamp lights. The load recorder will make an event mark on the right side of the chart. This establishes sender queue low.

(g) With the SQL lamp still lighted, operate the CALH key; the lamp lights.

(h) Turn the CALT and CALU selectors to the level you want to trigger sender queue high. This must be a higher setting than SQL.

(i) Turn the SQH potentiometer to the point where the SQH lamp lights. The load recorder will make an event mark on the right side of the chart. This establishes sender queue high.

(j) Release the CALH and CAL keys. The SQL and SQH lights will go out.

(k) If two sender groups are equipped, repeat steps (a) through (j) using the group B controls and turning the RCD key to position B. The event marks will be on the left side of the chart.

2.09 With the SQ key still operated, operate the CAR key; the lamp lights. The circuit should now function automatically. When the number of busy DB relays reaches the sender queue low level, the SQL lamp lights and the SQ timer starts. If the sender load drops below the SQL level before the time elapses, the circuit returns to normal and no further action results. If the sender load remains at or above the SQL level until the SQ time elapses, alternate routing will be canceled through an exchange of signals to the subtending offices. The tandem can be equipped with four CAR relays, each associated with ten alternate routes. When SQL goes into effect, the CAR relays operate, an ARCK (alternate route cancellation check) lamp on the console lights, and a cancellation signal goes to the subtending offices. Each subtending office acknowledges by sending back a signal which lights the ACK (alternate route canceled check) lamp associated with the route. This is without the common systems DOC circuit. With this circuit, using serial signaling, the last office acknowledges for all the offices on a signal chain. If there is a load reorder chart and/or a traffic register associated with the circuit, it will also operate as described in paragraphs 2.27 and 2.28. When the load drops below SQL, (after LT timing) first the SQL lamp goes out, then the CAR relays release which extinguishes the ARCK lamps and removes the cancellation request from the subtending offices. Cancellation is released and the ACK lamps also extinguish. The SQ timing stage described above can be bypassed by operating the CSQT key on the console. Route cancellation begins immediately upon reaching the sender queue thresholds, but the CSQT lamp will not light until the SQ timing interval has elapsed. Route cancellation remains in effect until the CSQT key is released.

2.10 ***MSQL Key—Manual Cancellation of Alternate Routing:*** Alternate-routed traffic can be canceled, bypassing the sender queue indicator circuit (DB relays), by operating the MSQL key on the left side of the console to the right of the individual route keys and lamps. There may be two keys, one associated with sender group A and the other with sender group B. This control indicates a continual SQL load to the timers. Cancellation remains in effect until the key is released. This control may be implemented as follows:

(a) Operate the MS key.

(b) If a load recorder is provided, operate the RCD key to position A or B.

(c) Operate the MSQL key and the lamp lights.

(d) Operate the CAR key and the lamp lights. The SQ timer operates from 1 to 9 seconds and then the SQL lamp lights. The circuit will now operate much as described in paragraph 2.08. The ARCK and ACK lamps will light indicating cancellation is in effect, then the recorder and registers will operate. When the MSQL key is released, the LT timer will operate from 1 to 9 seconds before the cancellation signal is removed. When using this control, the SQ and CSQT keys are normal, not operated.

2.11 ***MCAR Key—Manual Cancellation of Alternate Routing:*** Alternate routed traffic can be canceled, bypassing both the sender queue indicator and discriminator timers, by operating the MCAR key on the left side of the console to the right of the individual route keys and lamps. There may be two keys, one associated with sender group A and the other with sender group B. This control operates the CAR relays and puts a continuous cancellation request signal out to the subtending offices. Cancellation remains in effect until the MCAR key is released. The MCAR key is also used to cancel traffic on individual routes from cancellation as described in paragraph 2.12. This control may be implemented as follows:

(a) Operate the MS key.

(b) Operate the MCAR key and the lamp lights. The circuit will now operate much as described in paragraph 2.08. The ARCK and ACK lamps light to indicate cancellation is in effect and the traffic registers, if provided, will score.

When using this control, the CAR, SQ, and CSQT keys are normal, not operated.

2.12 ***Individual Alternate Route Cancellation and Exclusion:*** Individual routes may be canceled or prevented from canceling, independent of the automatic or manual operation of the sender queue circuitry, by operating the MCA (manual cancellation alternate route) key on the left side of the control panel in conjunction with other control keys. Operating the MCA key any time cancellation is in effect, automatically or manually, will lock-in cancellation. Operating the MCA key when cancellation is not in effect excludes the route from being canceled. There are two methods of canceling individual routes. The following instructions omit the preliminaries described in paragraphs 2.08 through 2.10, such as operating the MS and CAR keys, turning on the recorder, calibrating the sender queue circuitry, etc, and assume the console is already in a "go" condition.

Individual Route Cancellation #1

(a) Operate the MCAR key and the lamp lights.

(b) When the ACK lamps associated with the route to be canceled light, operate the corresponding MCA key and the MCA lamp lights.

(c) Release the MCAR key and all routes, except those with MCA keys operated, will return to normal.

(d) As a check, the MCA and ACK lamps on the canceled routes should be lighted, and all others should be dark.

(e) The individual routes will remain canceled until the MCA keys are manually released.

Individual Route Cancellation #2

2.13 Although this method is more complicated, cancellation of all alternate routing is avoided, while placing continuous cancellation on selected routes.

(a) Release the CAR key, if operated, so automatic cancellation does not operate.

(b) Operate the MCA key on each route to be excluded from cancellation (their associated ACK lamps must be dark) and the MCA lamps lights.

(c) Operate the MCAR key and the lamp lights. This cancels all the routes that were not excluded in step b. The ACK lamps on the canceled routes will light.

(d) Operate the MCA keys for the routes to be canceled (ACK lamps lighted) and this locks in cancellation.

(e) Release the MCAR key and then the MCA keys for the excluded routes. This restores all but the canceled routes to normal. Operate the CAR key to resume automatic control.

(f) As a check, the MCA and ACK lamps on the canceled routes should be lighted. All others should be dark.

(g) The individual routes will remain canceled until the MCA keys are manually released.

Route Exclusion

2.14 A route is excluded from automatic or manual cancellation by operating its MCA key when its associated ACK lamp is not lighted. This prevents the cancellation signal from going to the subtending office.

(a) Release the CAR key, if operated, so automatic cancellation does not go into effect.

(b) Operate the MCA key(s) on the route(s) to be excluded. The MCA lamp(s) will light. The associated ACK lamp(s) must be dark. Otherwise, cancellation will be locked in, not prevented.

(c) Operate the CAR key to resume automatic control.

(d) As a check, the MCA lamp(s) will be lighted on the excluded route(s), but their associated ACK lamp(s) will be dark.

(e) The route(s) will be excluded from cancellation until the MCA keys are manually released.

2.15 ***Direct Route Cancellation:*** Automatic controls are based on sender queuing. When a machine reaches a high enough level of congestion to trigger SQH, direct routed traffic can be automatically canceled. Automatic cancellation of direct routes should only take place after

alternate-routed traffic has been canceled. However, like the alternate routes, a direct route control can be manually operated at any time. It is important to remember that SQH cancellations are intended to handle serious overloads, so manually operating a direct route cancellation key may be a drastic control. The traffic control circuitry and the keys and lamps on the console for direct route cancellation operate the same as for alternate route cancellation.

2.16 ***CDR—Cancel Direct Route (Automatic Cancellation Sender Indicator):*** Direct-routed traffic is automatically canceled when three conditions have been met. First, sender queue low cancellation is in effect. Second, the sender queue indicator finds a predetermined number, larger number than for SQL, of decade busy relays operated. Third, the required number of DB relays remain busy from 1 to 9 seconds as set on the SQ timer. Then CDR is locked in effect for another interval of 1 to 9 seconds as set on HT timer. After the HT timing, direct route cancellation releases if the number of DB relays is below the SQH level. This control may be implemented as follows:

(a) The first step is to set the timers and calibrate the sender queue low and high levels. See paragraph 2.08, (a) through (k).

(b) With the SQ key still operated, operate the CAR and CDR keys and the lamps light. The circuit should now function automatically. When the number of busy DB relays reaches the sender queue high level, the SQH lamp lights and the SQ timer starts. If the sender load drops below the SQH level before the time elapses, the circuit returns to normal and no further action results.

(c) If the sender load remains at or above the SQH level until the SQ time elapses, direct routing will be canceled through an exchange of signals to the subtending offices. The tandem can be equipped with two CDR relays, each associated with ten direct routes. When SQH goes into effect, the CDR relays operate. A DRCK (direct route cancellation check) lamp on the console lights, and a cancellation signal goes to the subtending offices. Each subtending office acknowledges by sending back a signal which lights the DCK (direct routes canceled check) lamp associated with the route. This is without the common systems DOC circuit. With this circuit using serial signaling, the last office acknowledges for all the offices on a signal chain. If there is a load recorder chart and/or traffic register associated with the circuits, they will operate as described in para. 2.27 and 2.28.

(d) When the load drops below SQH, after HT timing, the SQH lamp goes out, then the CDR relays release which puts out the DRCK lamps and removes the cancellation request from the subtending offices. Cancellation is released and the DCK lamps also go out.

(e) The SQ timing stage described in paragraphs c and d above, can be bypassed by operating the CSQT key on the console. Route cancellation begins immediately upon reaching the sender queue threshold, but the CSQT lamp will not light until the SQ timing interval has elapsed. Route cancellation remains in effect until the CSQT key is released.

2.17 ***MSQH Key—Manual Cancellation of Direct Routing:*** Direct routed traffic can be canceled, bypassing the sender queue indicator circuit (DB relays), by operating the MSQH key on the top left side of the console to the right of the individual route keys and lamps. There may be two keys, one associated with sender group A and the other with sender group B. This control indicates a continual SQH load to the timers. Cancellation stays in effect until the key is released. This control may be implemented as follows:

(a) Operate the MS key.

(b) If a load recorder is provided, operate the RCD key to position A or B.

(c) Operate the MSQH key and the lamp lights.

(d) Operate the CDR key and the lamp lights. The SQ timer operates from 1 to 9 seconds and then the SQH lamp lights. The circuit will now operate as previously described. The DRCK and DCK lamps will light to show cancellation is in effect, and the recorder and registers will operate. When the MSQH key is released, the HT timer will operate from 1 to 9 seconds before the cancellation signal is removed. When using this control, the SQ and CSQT keys are normal, not operated.

2.18 ***MCDR Key—Manual Cancellation of Direct Routing:*** Direct routed traffic can be canceled, bypassing both the sender queue indicator and discriminator timers, by operating the MCDR key located on the top left side of the console to the right of the individual route keys and lamps. There may be two keys, one associated with sender group A and the other with sender group B. This control operates the CDR relays and puts a continuous cancellation request signal out to the subtending offices. Cancellation remains in effect until the MCDR key is released. The MCDR key is also used to cancel traffic on individual routes and to exclude routes from cancellation. This control may be implemented as follows:

(a) Operate the MS key.

(b) Operate the MCDR key, and the lamp lights. The DRCK lamps light to indicate cancellation is in effect and the traffic registers, if provided, will score. When using this control, the CDR, SQ, and CSQT keys are normal, not operated.

2.19 ***Individual Direct Route Cancellation and Exclusion:*** Individual routes may be canceled or be prevented from canceling, independent of the automatic or manual operation of the sender queue circuitry, by operating the MCD keys (manual cancellation direct route), in conjunction with other control keys. The MCD keys are located on the left side of the control panel. Operating an MCD key any time that cancellation is in effect, automatically or manually, will lock in cancellation. Operating an MCD key when cancellation is not in effect excludes the route from being canceled. There are two methods of canceling individual direct routes. The following instructions omit the preliminaries, see paragraphs 2.15 through 2.17, such as operating the MS and CDR keys, turning on the recorder, calibrating the sender queue circuitry, etc, and assume the console is in a "go" condition.

Individual Route Cancellation #1

(a) Operate the MCDR key and the lamp lights.

(b) When the DCK lamps associated with the route to be canceled light, operate the corresponding MCD key and the lamp lights.

(c) Release the MCDR key and all routes, except those with MCD keys operated, will return to normal.

(d) As a check, the MCD and DCK lamps on the canceled routes should be lighted, all others should be dark.

(e) The individual routes will remain canceled until the MCD keys are manually released.

Individual Route Cancellation #2

2.20 Although this method is more complicated, the cancellation of all direct routing is avoided, even for a short time, while placing continuous cancellation on some routes.

(a) Release the CDR key, if operated, so automatic cancellation does not operate.

(b) Operate the MCD key on each route to be excluded from cancellation (their associaed DCK lamps must be dark) and the lamps light.

(c) Operate the MCDR key and the lamp lights. This cancels all the routes that were not excluded in step b. The DCK lamps on the canceled routes will light.

(d) Operate the MCD keys for the routes to be canceled, DCK lamps lighted. This locks in cancellation.

(e) Release the MCDR key and then the MCD keys for the excluded routes. This restores all but the canceled routes to normal. Operate the CDR key to resume automatic control.

(f) As a check, the MCD and DCK lamps on the canceled routes should be lighted. All others should be dark.

(g) The individual routes will remain canceled until the MCD keys are manually released.

Route Exclusion

2.21 A route is excluded from automatic or manual cancellation by operating its MCD key when its associated DCK lamp is not lighted. This prevents the cancellation signal from going to the subtending office.

(a) Release the CDR key, if operated, so automatic cancellation does not go into effect.

(b) Operate the MCD key on the route(s) to be excluded and the lamp(s) will light. The associated DCK lamp(s) must be dark. Otherwise, the cancellation will be locked in, not prevented.

(c) Operate the CDR key to resume control.

(d) As a check, the MCD lamps will be lighted on the excluded routes, but their associated DCK lamps will be dark.

(e) These routes will be excluded from cancellation until the MCD keys are manually released.

2.22 ***Trouble Lamps:*** The traffic control circuit has a number of trouble checks built into its circuitry. Several of these are connected to lamps located on the far right of the console about halfway down. When one of these lamps lights, it indicates either a false operation or a failure of a control to operate.

(a) ***CSTF—Failed to Cancel Short Sender Timing:*** This lamp lights under the following conditions: First, it lights when the CSST relay fails to operate to cancel short sender timing. It is connected with the marker queue circuit. CSST should go into effect after the MQ timer elapses. Second, if the CSST relay operates correctly but the intersender timing circuit fails, the CSTF lamp lights. In addition, the STCK lamp (canceled short sender timing check) which was lighted, will go out. Failure of manual short sender timing cancellation, the MSST key will operate in the same way.

(b) ***FRK—False Cancellation Check:*** When a subtending office receives a cancellation signal, it returns a signal to the tandem and the ACK or DCK lamp associated with the route will light. If the route remains idle (ie, not canceled) for a predetermined period of from 1 to 10 seconds, the FRK lamp on the console lights. In some cases, a false route cancellation will also light this lamp, as explained in subparagraph c.

(c) ***FRC—Routes Canceled Falsely:*** If all the CAR or CDR relays operate when the corresponding automatic or manual cancellation equipment is normal, ie, when SQL or the MCDR, etc, keys are not operated, the FRC lamp will light. The ARCK or DRCK lamps do not light. However, if only some, not all, of the CAR or CDR relays operate falsely, a different trouble check takes place and the FRK lamp lights instead.

(d) ***CARF—Failure to Cancel Alternate Route:*** When the tandem sends a signal to a subtending office to cancel an alternate route and does not get a signal back, the CARF lamp lights. The corresponding ACK lamp will not light. This lamp is associated with the CAR relay circuitry and will not light if the failure occurs when the MCAR key is operated.

(e) ***CDRF—Failure to Cancel Direct Route:*** When the tandem sends a signal to a subtending office to cancel a direct route and fails to get a signal back, the CDRF lamp lights. The corresponding DCK lamp will not light. This lamp is associated with the CDR relay circuitry and will not light if the failure occurs when the MCDR key is operated.

2.23 ***Timers:*** The traffic control circuit contains a group of timers which are an important part of its operation. The ones of most interest to the network administrator are the MQ and MT timers in the marker queue circuit, and the SQ, LT and HT timers in the sender queue circuit. The timers are in the maintenance quarters. However, the network administrator specifies the settings for the marker and sender queue timers. A setting of 2 or 3 seconds is recommended for each of these five timers. Since the sets of timers work in about the same way, the MQ and MT operation will be used as an example. There is a small difference in sematics, however. The marker queue timers are activated by the marker queue detector. The sender queue discriminator timers are activated by the sender queue indicator. The maintenance practices make this distinction because of differences in the sensing circuitry. From a network administration standpoint, the result is the same.

2.24 The purpose of the marker queue circuit is to cancel or prevent short sender timing when the tandem becomes congested. When the marker queue detector finds all markers busy, it starts the MQ timer which times for a preset period. If a marker becomes idle before the time elapses, timing stops and the circuit releases. If the MQ time elapses without an idle marker being available, cancel short sender timing is locked into effect and the MT timer starts its preset timing.

Even if a marker becomes available during the MT timing, CSST will not release. After the MT time elapses, the lock is opened (but CSST is not released) and the marker queue detector is checked to see if there is now an idle marker. If so, CSST is released. If not, CSST is locked in for another MT timing cycle.

2.25 The timers work together in this manner to prevent the office from continually going in and out of short sender timing cancellation. The MQ timer keeps CSST from operating only during momentary overloads. The MT timing insures that once operated, the control remains in long enough to help clear congestion.

2.26 The sender queue circuit and the sender queue indicator signals the start of the initial timing on the SQ timer. The LT timer then determines the duration of the sender queue low controls and the HT timer determines the duration of the sender queue high controls. The SQ timer operates only at SQL. When the load is heavy enough to trigger SQH, direct route cancellation immediately locks in and the HT timing starts. Following is a list of the other TCC timers:

(a) ***RC Timer:*** The RC timer is associated with the CAR and CDR relays. It times once each second either relay is operated, and scores the appropriate register. The total time, in seconds, that either alternate or direct routed traffic has been automatically canceled, can be scored on individual traffic registers.

(b) ***FK, DF, AFA, and AFB Timers:*** These timers are associated with the route cancellation circuitry and are used to detect cancellation failure and false cancellation. They are set independently and operate somewhere in a range of 1 to 10 seconds. For example, when the tandem sends a direct route cancellation signal to an office and fails to get an acknowledgment signal back, the DF timer starts a preset 1 to 10 second cycle. If no signal has returned when that time elapses, the CRDF lamp on the console lights and appropriate lamps and minor alarms are activated in the maintenance quarters.

A setting of about 5 seconds is recommended for the route cancellation timers.

2.27 ***Load Recorders:*** A strip chart may be provided on the upper right side of the console. It will continuously record either the sender group A or sender group B load while the automatic sender queue circuit is operating. The strip chart paper in the load recorder has ten major divisions, and each major division is divided into five minor divisions of 2/10th each. The recorder is calibrated to show on the chart the sender load and to indicate with an event marker when sender queue low and/or high levels occur. The RCD key below the recorder is used to turn it on and to select sender group A or B.

2.28 ***Load Registers:*** Registers may be provided on the traffic register bay to record the number of seconds automatic cancellation is in effect. Up to four registers may be installed if both sender groups A and B are equipped. Two registers will score sender groups A and B alternate route cancellations, and two will score A and B direct route cancellations. They begin scoring one second after the CAR and CDR relays operate, and continue to score once each second until the relays are released.

2.29 ***RD 0-3 Lamps:*** Four RD (Route Denied) lamps are located on the bottom left side of the console. These lamps are now rated manufacture discontinued. They were connected to the XBT DOC receiving circuits, and lighted when the tandem received a cancellation signal from its home XBT or No. 4 office.

3. SIGNALING

3.01 ***Signal Circuits:*** Any of four types of circuits may be used to transmit a control signal to a subtending office or, with serial signaling between wire centers located in different buildings. The one used depends mainly on what types of circuits connect the tandem to its end offices. They may be a 43A telegraph carrier/channel, a 4-wire circuit using loop signaling, a 4-wire circuit using E & M signaling or a 2-wire circuit. In some locations, special service orders (SSO) are required to connect the signaling circuits.

3.02 ***Serial and Radial Signaling:*** In the traditional DOC system, the controls for each entity require separate signaling circuits from the tandem to each entity. This is called radial signaling. The common systems DOC circuit can recognize up to 30 signals from the control tandem. It can pass these signals to a series of DOC receiving circuits which may be located in one or several

buildings. The last DOC circuit in the chain sends the acknowledgment signal for all the entities controlled, back to the XBT. This is called serial or "round-robin" signaling. The common systems circuit can also be arranged to send a signal to an individual office (radial signaling). This gives the network administrator and network manager considerable latitude in designing a system which includes controls to handle overloads as well as specific recurring problems.

3.03 ***Signaling Systems:*** Two types of systems are in use to transmit the control signals to the subtending offices. Since one system sends a steady signal to the distant office and the other an interrupted signal, it will be very difficult to use both systems in one network configuration. For example, a No. 5XB office might be arranged to cancel a percentage of its alternate routed traffic on receipt of a DOC signal from its home Sectional and Regional Centers. The No. 5 will be equipped to receive either an interrupted or a steady signal and, of course, both higher ranking offices must transmit comparable signals.

3.04 ***Interrupted Signal:*** The common systems DOC circuitry uses a periodically interrupted signal. The interrupted signal allows automatic detection of false cancellation signals caused by crossed or grounded facilities and thus protects service to the customer. An interrupted signal is broken for 800 milliseconds after every 29 seconds. Each signal in the wire center is monitored by an individual timer which recycles in the 800 milliseconds no-signal period. If a timer times out, has not detected an interruption in, 31 to 38 seconds, the signal is considered false and is immediately removed from the affected markers, trunks, etc. With serial signaling, the signal is not sent on to the next DOC circuit or office. At the same time, a second timer which is common to all signals in the wire center starts timing from 13 to 32 seconds. At the end of this interval, alarms go off in the entity where the DOC circuit is located.

4. COMMON SYSTEMS DOC CIRCUIT

4.01 The common systems DOC circuit can be installed in the subtending offices to receive signals from the controlling XBT or a preceding DOC circuit. It performs two functions. First, it passes each signal to a route transfer control unit which activates the predetermined controls in the end office entity. Second, it can generate the signal and transmit it to the next DOC circuit in a chain (serial signaling). Or, the control tandem can communicate directly with individual entities to exchange control and acknowledgment signals (radial signaling).

4.02 This circuit does not change the kinds or the total numbers of controls that can be implemented in an end office (ie, there can still be only 20 route transfer relays installed in one No. 5 XB marker). The advantage is that the common systems DOC circuit can recognize up to 30 incoming signals from the control XBT and can pass them to up to eight entities in one wire center and then to another wire center in the same or another building. This can substantially reduce the number of expensive dedicated tandem circuits required for network management. When signals are passed between buildings in a serial chain, dedicated signal channels are required. This circuit also permits more precise management of the network since different types of controls can be assigned to different signal paths instead of being grouped onto one sender queue low and one sender queue high circuit. See paragraph 9 on assigment considerations.

4.03 Following is a list of definitions used in connection with the common systems DOC circuit:

(a) ***Switching Entity or Entity:***

#1 ESS: The No. 1 Electronic Switching System central office equipment

#5XB: A marker group of a maximum of 8 or 12 completing markers.

#1XB: A marker group of a maximum of eight originating markers.

Panel: A decoder group of a maximum of six decoders.

(b) ***Wire Center:*** A building containing one or more entities. Normally, the term "Wire Center" refers to one or more entities serving the same general area. In this instruction the term refers to entities receiving DOC signals through one common systems DOC signal circuit.

(c) ***DOC Signal:*** In the context of the receiving office equipment, the DOC control signal

may have been dynamically or manually initiated by the control tandem.

4.04 The common systems DOC circuit is designed to be installed in #1XB, #5XB, Panel or #1 ESS offices. It can also be installed in Step-by-Step Switching System (SXS) SAMA and/or CAMA offices. One circuit can receive up to 30 separate route transfer or cancellation signals and can distribute all 30 signals up to 8 entities in a wire center, which may be a combination of #1XB, #5XB, SXS, Panel or ESS. When there are more than 8 entities in the same wire center, two or more DOC circuits must be installed, each controlling up to eight entities. See Fig. 8 for a schematic diagram.

4.05 When a DOC circuit is associated with several entities, one entity is selected to install the local control panel and maintenance and testing equipment. This entity also receives the alarms if the circuit detects false signals from the control XBT or preceding DOC circuit.

4.06 Two types of circuit units are provided in each wire center. A DOC and alarm unit provides control and alarm facilities for a maximum of 30 DOC signal units. One DOC signal unit is required for each DOC signal that is received in the building. Each DOC signal unit can repeat the signal to a maximum of eight entities in the building. Then as described in paragraphs 5 through 8, additional equipment in the entities actually activates the controls.

5. SUBTENDING ESS OFFICES

5.01 Following is a brief description of the network management controls which may be implemented in No. 1 ESS offices. Paragraph 11 lists sources of more detailed information on ESS controls. The CTX-6 generic program provides an effective group of network management tools for class 5 ESS offices. Generic CTX-7 provides additional capabilities in conjunction with the ability to use No. 1 ESS as a class 4 office.

5.02 ***Hardware Requirements:*** The CTX-6 generic program works with the common systems DOC circuit through the remote master scanner applique circuit. This common systems DOC circuit, serving one wire center, can receive and transmit up to 30 signals to a maximum of 8 entities, four of which can be No. 1 ESS. An ESS office can serve as the maintenance entity for a wire center.

5.03 With CTX-6, two types of controls are available, code blocking and trunk group routing. These controls may be used as follows:

(a) ***Code blocking:*** A maximum of 31 unique codes can be controlled simultaneously, and the choices are:

NPA, area code

NXX, central office code

NPA-NXX

NPA-NXX-XXXX, 10-digit directory number

NXX-XXXX, 7-digit directory number

Code blocks can only be activated manually, by teletypewriter. Controls can be set to block 50, 75, 87-1/2 or 100% of the attempts to each code. For example, controls could go in to block 75% of the calls to 312-685 and 50% of the calls to all other NXXs in the 312 NPA. So there is a good deal of flexibility.

(b) ***Trunk group:*** A maximum of 63 separate preprogrammed controls may be set up in memory to cancel alternate or direct routing or to skip route. Direct and alternate route controls can be set for 50, 75, or 100% of the traffic attempting to access the controlled trunk group. All preprograms may be activated manually, by teletype. Up to 30 may be activated by DOC. Up to three preprograms can be assigned to one trunk group which can be activated from the TCC in the tandem. However, since a trunk group can only be controlled by one preprogam at a time, a unique DOC circuit is required to activate each control on a given group.

6. SUBTENDING NO. 5 CROSSBAR OFFICES

6.01 Following is a brief description of the network management controls which may be implemented in No. 5XB offices. Paragraph 9 discusses assignment considerations in general, and paragraph 11 lists sources of more detailed information on No. 5XB.

6.02 Various traffic controls can be activated remotely or at the No. 5XB by route transfer equipment which will operate up to 20 route relays in one or more markers. Plans can be developed for code blocking, changing the traffic route pattern or denying certain codes access to a portion of the trunks in a given group. When trunk make busy (TMB) circuits are provided, DOC signals can be used to take trunks out of service.

6.03 Without the common systems DOC circuit, signals from the control tandem go directly to the RT or TMB equipment in each No. 5XB office. Each office returns an acknowledgment signal to the tandem. Individual circuits are required to operate sender queue low and sender queue high controls.

6.04 With the common systems DOC circuit, as explained in paragraph 4.01, this equipment does not change the number or types of controls which can be implemented with DOC. It does eliminate the need for dedicated tandem circuits from every entity. With this circuit, the No. 5XB entity can receive up to 30 separate DOC signals. Paragraph 4.04 explains that each wire center receiving DOC signals is equipped with one DOC alarm unit and one DOC signal unit for each of the 30 possible signals. In addition, each No. 5XB entity controlled is equipped with the following:

(a) One dynamic overload route transfer control (RTC) unit. This unit is designed to receive up to 30 DOC signals and operate up to 20 RTCA relays. The unit is fully cross-connectable. The RTCA relays, in turn, operate one or more, up to 20, RT relays in one or more of the No. 5XB markers.

(b) Thirty cancel route transfer (CRT) keys and lamps are usually installed in the maintenance quarters. One key is associated with each DOC signal. When operated, these keys cancel the control signals from the tandem. A circuit option is available to make these keys inoperative.

(c) Traffic peg count registers can be assigned to work in conjunction with this circuit. They can be arranged to score when individual RT relays operate, when a cancellation signal is received or when a particular route is controlled.

(d) One or more of the 30 control signals may be used to operate trunk make busy (TMB) circuits. Up to 600 trunks, in multiples of 12, can be controlled by one signal.

7. SUBTENDING NO. 1 CROSSBAR OFFICES

7.01 When the office is equipped with RT relays and/or TMB circuits, essentially the same kinds of controls are available in No. 1XB as in No. 5XB. See paragraphs 6.01 through 6.04.

7.02 With common systems equipment, paragraph 4.04 explains that each wire center receiving DOC signals is equipped with one DOC alarm unit and one DOC signal unit for each of the 30 possible signals. Three additional units are required for all originating markers in No. 1XB entities under DOC control. Each No. 1XB entity is equipped with the following:

(a) One dynamic overload route transfer control unit is designed to receive up to 20 RT signals.

(b) One originating marker dynamic overload route transfer relay unit is required per four markers. Through this unit, each marker can receive up to 10 RT signals which operate up to 20 RT relays. The RT relays are operated in multiples of two.

(c) One originating marker dynamic overload peg count unit is required per four markers. Traffic registers can be assigned to work in conjunction with this circuit. They can be arranged to score when individual RT relays operate, when a cancellation signal is received or when a particular route is controlled.

(d) One TMB circuit can be associated with each DOC signal. Each circuit can control up to 600 trunks in multiples of 12.

(e) Thirty cancel route transfer (CRT) keys and lamps are usually installed in the maintenance quarters of each No. 1XB entity under DOC control. One key is associated with each DOC signal. When operated, these keys cancel the control signals from the tandem. A circuit option is available to make these keys inoperative.

8. SUBTENDING STEP-BY-STEP AND PANEL OFFICES

8.01 When SXS or panel offices are equipped with trunk make busy circuits, they may be

remotely operated by DOC. One TMB circuit is operated by each signal (up to 30 signals with the common systems DOC circuit). Each TMB circuit can control up to 600 trunks, in multiples of 12 trunks. Without TMB circuits, the only control available in these offices is to manually turn down trunks.

9. ASSIGNMENT GUIDELINES

9.01 The purpose of dynamic controls is to remove traffic from a switching machine that is being offered a load in excess of its capacity. With a traffic control console, this is accomplished in two ways. First, a portion of the incoming traffic from lower ranking offices, or other tandems in a metropolitan network, is canceled. Second, XBT short sender timing is canceled to give calls which do reach the tandem a better chance to complete. In addition to these automatic controls, cancellation may be manually implemented or excluded from the TCC to handle specific problems.

9.02 Assigning local DOC is essentially a matter of determining roughly how much traffic each office sends to the tandem during "normal" overloads, deciding how much of this total traffic should be canceled at sender queue low and how much at sender queue high, and then deciding how best to block these amounts of traffic. Therefore, the first step in assigning the TCC is to look at the total network. For example:

(a) Is the XBT part of a metropolitan network which handles intertandem traffic, or does it serve mainly originating and terminating toll center and tributary traffic? For simplicity, with exception of specific considerations for a multimessage unit or metropolitan tandem network, this practice refers to a direct distance dialing (DDD) switching network.

(b) Using historical data, how much traffic does each office send to the tandem on peak days such as Mother's Day or Christmas or during disasters, etc? The network completion reports can be used to identify easy-to-reach (ETR) and hard-to-reach (HTR) points. The HTR points are good candidates for controls in offices with route transfer and code blocking capabilities.

(c) What types of local offices are served (ESS, Panel, etc.) and what controls are available in each?

(d) If the control tandem is part of a metropolitan network, what are the possibilities for controls in the other tandems?

(e) How many and what kinds of switchboards are served? Does the tandem serve centralized automatic message accounting (CAMA)? Again, what, if any, remote controls are available?

(f) How near is the tandem to capacity? An under-engineered machine or one that experiences frequent equipment outages will probably require more control.

(g) What is the proportion of alternate to direct routed traffic entering the control tandem? Where does it come from? Does it alternate route from the tandem group to a higher ranking office? Is there a potential skip route?

(h) What other controls are established? For example, do higher ranking tandems or No. 4s have DOC circuits to the subtending office? Is DRE installed on any of the trunk groups from the subtending offices to the tandem? Are CRT keys installed in the subtending No. 1 or No. 5 crossbar offices?

(i) What is the nature of the geographical area served by the XBT? What types of overloads most often occur, radio call-ins, local events, flood, etc?

9.03 As the load on a tandem increases, it passes from a normal range to a point when congestion just begins to occur. If the load continues to increase, congestion builds until the machine's ability to switch calls is seriously impaired. This congestion is seen as a shortage of common control equipment. The senders begin to back up or queue waiting for an idle marker, and incoming trunks begin to queue waiting for an idle sender. Inevitably, more calls are sent to recorded announcements and this means short holding times and more regenerated attempts. Whether the "problem" is a general overload, Mother's Day, or some event in a specific location such as an earthquake, congestion will spread. Controlling traffic lower in the network will assure that a maximum amount of good traffic will be handled by the network.

9.04 The objective in establishing the dynamic controls, is to set the sender queue low level so it takes effect when the tandem begins to

become congested, and it removes sufficient attempts to get the tandem out of a "normal" overload. The sender queue high level is a much more drastic control and should operate only when the tandem becomes excessively overloaded. The most effective settings will be low enough to adequately control sender delay but high enough so SQL is not continuously in effect.

9.05 Following are some guidelines for local DOC sender queue levels to meet the objectives discussed. With experience, the network administrator will discover the best average setting for the specific office:

(a) In offices with one type of sender, SQL is generally set at twice the number of markers installed. This setting should be high enough to keep SQL from operating even if one or possibly two markers are temporarily out of service, unless an overload happens to occur at the same time.

(b) Offices with more than one type of sender should apportion the SQL setting of two times the number of installed markers among the different types of senders. In considering dynamic controls, the most important characteristic of a sender group is the rate it can serve calls. The rate is the number of senders in the group divided by the average holding time for the sender group. First, determine the rate of each type of sender, then compare it to the total office rate, using the following formulas:

$$T1 = \frac{(2 \times \text{markers})\ R1}{R1 + R2}$$

$$T2 = \frac{(2 \times \text{markers})\ R2}{R1 + R2}$$

T1 is the SQL threshold for sender group 1, T2 is the SQL threshold for sender group 2. R1 is the rate for sender group 1 and R2 is the rate for sender group 2. Following is an example for calculating the SQL settings in an XBT with 8 markers, 52 MF senders with a holding time of 8.5 seconds and 80 DP senders with a holding time of 20 seconds:

$$R1 = \frac{52 \text{ MF senders}}{8.5 \text{ seconds}} \quad \text{or} \quad R1 = 6$$

$$R2 = \frac{80 \text{ DP senders}}{20.0 \text{ seconds}} \quad R2 = 4$$

MF sender

$$\text{SQL } T1 = \frac{(2 \times 8 \text{ markers})\ 6}{6 + 4} \text{ or } \frac{96}{10} \text{ or}$$

SQL T1 = 10

DP sender

$$\text{SQL } T2 = \frac{(2 \times 8 \text{ markers})\ 4}{6 + 4} \text{ or } \frac{64}{10} \text{ or}$$

SQL T2 = 6

This formula can be expanded to include more than two types of senders.

(c) Controls for SQH are generally set at four times the number of markers. The same basic formulas shown for SQL can be used to calculate SQH settings when more than one type of sender is involved. Offices with more than two types of senders have a choice of combining more than one kind of sender on a sender queue group, ie, DP and DP CAMA, or preferably, selecting the two sender types which have the greatest potential effect on machine congestion and assigning them to sender queue circuits A and B.

9.06 Having decided the sender queue settings, the next consideration is the types of controls to use. One recommendation is canceling 35 to 40% of the total incoming traffic to the control tandem at SQL. It is difficult to recommend actions for the extreme overloads that trigger SQH, but 70 to 80% cancellation might be a reasonable objective. Depending on the capabilities of the subtending offices, and some will probably have no remote controls, cancellation will generally be accomplished by denying specific kinds of calls

access to the tandem (ie, alternate routed) or of making some of the trunks to the tandem busy. Properly assigned, the customer will always receive a better service break with dynamic controls since cancellation is intermittent and all calls have access to the tandem as soon as congestion eases. Manual controls, especially trunk make busy, are in effect continuously after they are implemented, and frequently deny the customer tandem access even after the overload. The tandem administrator's objective should be to make maximum use of the DOC facilities and, as far as possible, request manual controls sparingly and for the shortest time feasible.

9.07 The available controls are discussed briefly below. More detailed information is available on this subject. (See list of references in paragraph 11). Controls are listed in descending order of selectivity:

(a) ***ETR/HTR Points:*** In route transfer equipped offices, calls to codes identified as hard-to-reach (from AMA tape studies), should have restricted access to the tandem during an overload. This can be done in two ways. Codes for ETR points can be assigned to one group of route relays and for HTR points to other route relays. Then RT relays are assigned to send calls for HTR codes to recorded announcements, instead of alternate routing, or to deny HTR codes access to part of the trunks in a trunk group. ETR codes continue to have full access to the trunks. At SQL usually only HTR codes are blocked in all or part of the No. 1XB or No. 5XB markers. At SQH, a portion of ETR codes may also be blocked. No. 1 ESS Generic 6 provides excellent code blocking facilities. Although code blocks cannot be operated dynamically, they still represent a superior control, especially for focused overloads.

(b) ***Alternate Routing:*** At SQL, 100% of alternate routing to the tandem should be canceled. This blocks a fairly predictable amount of traffic after giving the call at least one opportunity to complete. The 100% cancellation is recommended because lower percentages have been found to be less effective than expected. For example, implementing 50% cancellation in ten offices tends to remove less traffic from the tandem than implementing 100% in five offices.

(c) ***Skip Routes:*** Skip Routes can be used to send direct or alternate routed traffic to the next higher office in the routing pattern, bypassing the overloaded tandem. This works well provided the next office can handle the calls. Therefore, it is important to be sure there is some way to exclude this control (at the tandem or in the next office), in the event the next office is unable to handle the calls.

(d) ***Cancel Direct Route:*** The ETR/HTR arrangements described above can be applied to a portion of the first routed traffic, as well as to alternate routed traffic. Although it is less desirable to block calls before they have one chance to complete, the control does give preference to calls that are most likely to become billed messages.

(e) ***Trunk Make Busy:*** Although turning down trunks has traditionally been a manual operation, the control can be implemented dynamically in SXS SAMA, No. 1XB, No. 5XB and Panel offices. TMB is the least desirable of the controls for two reasons. First, by denying all calls full access to the tandem, it blocks some calls that have a reasonable chance to complete when congestion is not too severe. TMB may also be a less effective control than expected because, during overloads, the large number of ineffective attempts on the network may substantially reduce the average trunk holding time. When this occurs, even a few idle trunks can carry a fairly large number of attempts to the tandem. However, despite its drawbacks, TMB is the only control available in many offices and can be helpful in route transfer offices at sender queue high. As a starting place, local networks with a large proportion of SXS offices might arrange for a 25% TMB at sender queue low and 75% at sender queue high. Route transfer offices might rely on other controls at sender queue low and then at SQH make 75 to 80% of the tandem trunks bus. ***Trunk Make Busy is an effective control only when it causes some degree of "no circuit" conditions on the controlled group.***

9.08 ***Signaling Circuits:*** Without the common systems DOC circuit, separate signal paths are required to each end office, and with two levels of control, two paths are needed. So it becomes a matter of economics to determine which offices to equip and whether to use both SQL and

SQH controls. Once it is decided to use DOC, various controls are assigned on one signal. Where appropriate, certain offices can be excluded from control. However, when several controls are assigned to one circuit, there is no way for the control tandem to exclude any single control assigned to a particular circuit. With common systems DOC circuits, the situation is somewhat different. One of the main advantages is the use of serial signaling. Without this circuit, 16 signal paths are required for SQL and SQH controls on eight entities in one location. With this circuit it can be done with two, except it would be unwise to do it with just the minimum number of signal circuits. Instead of combining several different controls on one signal channel, the common systems DOC circuit enables the administrator to assign different kinds of controls to different circuits. For example, HTR code controls might be assigned on one signal circuit and alternate route cancellation and skip routes on another. Trunk make busy controls for class 4 offices might be assigned to one circuit and to another for class 5 offices. The administrator may want to be able to manually put a control in a particular office at a particular time. This could be assigned a separate signal channel and then excluded from dynamic cancellation at the traffic control console. The drawback to the common system is that one signal may affect a series of offices and there is no way for the tandem to exclude one office in the series, from control. In route transfer offices, the CRT (cancel route transfer) keys, if operative, can be used to cancel a signal. However, it is essential that the local office administrator and maintenance people understand why and when to use the CRT keys. Therefore, while the common systems DOC circuit certainly increases the usefulness and effectiveness of network management, it also complicates the assignment and record-keeping job and makes it even more important for the XBT administrator to know the capabilities and characteristics of every subtending office.

9.09 The basic philosophy of network management applies to both the metropolitan and the North American networks and the North American network managers can offer considerable help and guidance. Working within these guidelines, it is the responsibility of the tandem administrators to learn, through experience, exactly what controls and what levels of control are most effective in their particular machines. Data provided on load registers and the strip chart will help determine what the best "normal" setting should be for the sender queue and marker queue circuits and whether the controls established in the subtending offices are adequate. Since the console should be on dynamic control most of the time, and certainly when the office is unattended, the chart should be checked regularly to see if brief overloads did occur and how the machine reacted. It is essential to log the type and duration of all controls taken on major holidays and during serious network overloads. This insures that all controls are removed after the network returns to normal. It also adds to the general knowledge of network management techniques.

9.10 ***Cancel Short Sender Timing:*** In an XBT, when all subgroups of one type of sender on any sender link frame become busy, the time that type of sender will wait to attach a sender in the next office is reduced from about 30 seconds to about 5 seconds. When time-out occurs before the distant sender is attached during short sender timing, the sender calls in another marker and routes the call to sender overload announcement (SOA). The idea is to make more senders available to serve incoming calls by reducing sender holding time. However, during heavy overloads short sender timing (SST) can actually increase machine congestion by putting markers in short supply. When this happens, it may make better use of the tandem's capacity to let the sender wait for the normal interval since an idle path has already been found to the next office. The TCC has both dynamic and manual controls to cancel short sender timing. The dynamic controls operate when all markers have remained busy for (recommended setting) 2 to 3 seconds. Once initiated, CSST stays in effect for at least 2 to 3 seconds after congestion drops below the sender queue level. CSST makes an important contribution to keeping the network filled with good messages by helping to insure the markers are used to route calls to the next offices rather than to recorded announcements.

9.11 ***DOC Timing:*** As explained in paragraph 2.23, the sender queue and marker queue circuits include timers which insure efficient and adequate operation. All five of these (MQ, MT, SQ, LT, and HT) have a variable setting from 1 to 9 seconds. The recommended setting for each is 2 or 3 seconds. In this range, the dynamic control remains in effect about 10 seconds. An effective setting for the MQ timer can be determined by using a pen recorder to measure the time all

markers are busy during normally heavy traffic periods, Monday morning busy hour for example. Marker queue should be set to trigger just above the average all markers busy (AMB) interval.

10. ASSIGNMENT RECORDS

10.01 Accurate up-to-date records are essential to administer a dynamic system. Not only does the control tandem have to know exactly what controls are associated with every signal circuit, the administrators in the end offices should also have this information available for their machines. Since there are no standard procedures or responsibilities for assigning some of this equipment, the emphasis in this paragraph will be on what records and assignments are required rather than on who should initiate and maintain records or what form to use.

10.02 ***Control XBT:*** The required assignments and trunk orders to be issued by the control XBT are as follows:

(a) Trunk orders are required to establish the signal circuits from the XBT to its subtending offices and/or between subtending offices. If the traffic trunk forecast lists the DOC circuits to the subtending offices, a trunk order is required to connect the circuits If they are not provided in the trunk forecast, the network administrator must make local arrangements to have them installed.

(b) The signal circuits must be connected to the appropriate MCA/ACK and MCD/DCK keys and lamps on the console. This is generally handled locally with the network administrator giving an assignment list to the maintenance group. Fig. 9 shows an example of the required information. It is a simple running list and can be put on any convenient worksheet.

(c) The settings for the various timers in the TCC control circuits are also requested locally, usually in a memo to the maintenance group.

(d) The control tandem administrator needs an accurate record of exactly what is assigned to each cancellation key on the console. Fig. 10 illustrates a sample record form.

10.03 ***Subtending Offices:*** The required assignments and orders for the subtending offices are as follows:

(a) The first step is for the control tandem and the subtending office administrators to discuss the controls to be established in each subtending office. Since ETR/HTR codes are determined by the ability of the higher-ranking offices to complete the overflow traffic from offices lower in the routing chain, a joint decision should be made on the code blocks and other routing and trunk make busy controls for SQL and SQH.

(b) In a metropolitan network, the tandem administrator should arrange to have orders issued to connect the RT relays in the end office. In some instances, the control tandem may handle this for all its subtending offices. In this case, it is important for the local offices to receive copies of the orders. See Fig. 11 and Fig. 12.

(c) As with other aspects of the DOC equipment, the type of signal circuit used will affect the contents of the local office records. The subtending offices should maintain a record of the controls including the following:

1—The type of control

2—The signal circuit number

3—The RT relay and marker assignments

4—The number of trunks to be turned down, if appropriate

5—The CRT key assgnments, if used.

11. REFERENCES

11.01 The following are sources of information on network management techniques and end office dial equipment

(a) Network Management:

—Network Management Handbook.

—Central Office Management Circular, Div. F Sec. 2 and 4.

—E. L. (Engineering Letter) 204, XBT and No. 5XB, Dynamic Overload Controls, March 17, 1969, File 3C3.3C and D.

—E. L. 2007 (G. L. 73-04-039), No. 4XB and XBT Systmes, Improved DOC Features, April 6, 1973 File 3C3.3B and D.

—E. L. 2006 XBT Common Systems DOC Circuit, improved local office control equipment and local Network Management techniques.

(b) XBT Traffic Control Console:

—CD 27855-01, Crossbar Systems Tandem Office, Traffic Control Circuit.

—BSP 220-425-501, DOC Features Using Traffic Control Circuit SD 27855.

—BSP 817-505-153, Traffic Control Frame and Traffic Control Console Equipment Design Requirements.

(c) XBT Common Systems DOC Circuit:

—CD 27970-01, Common Systems DOC Circuit for use in Crossbar Systems No. 1 and No. 5 and Panel Systems.

—E. L. 2006 and 2007, described in paragraph 11.01a.

(d) No. 1 ESS Control Facilities:

—E. L. 2435, No. 1 ESS 2-wire—Announces the Initial Phase of Network Management Controls in the CTX-6 Generic Program.

—Translation Guide (TG-1A) Div. 5, Sec. 91, Jan. 1973. This has the same information as E. L. 2435 plus detailed instructions for the ESS Administrator for filling out the translation forms. Normally, there is no reason for the XBT Administrator to receive the TG-1A.

DFMP, Division H, Section 6d(2), No. 1 ESS Network Management

—TFPS (Traffic Facilities Practice Supplement) Div. D Sec. 8a, High Day Traffic Control System, TFPS Serial No. 13, Oct. 1970.

—E. L. 2006 and 2007 described in paragraph 11.01a.

(f) Step-by-Step Control Features:

—TFPS Div. D Sec. 4y, Step-by-Step Automatic Message Accounting (SAMA), TFPS Serial 43, Aug. 1972.

TABLE A

TRAFFIC CONTROL CONSOLE FEATURES

KEYS	DESIGNATION	FUNCTION	MAIN PARAGRAPH REFERENCE
* CAL	Calibrate	On when setting sender queue levels.	2.07
* CALH	Calibrate High	On when setting sender queue high level.	2.08
* CAR	Cancel Alternate Route Activated	Activates the cancel alternate route circuit to signal the distant offices via the (nonoperated) MCA routes when the SQL threshold is reached.	2.08,2.10,2.12 2.16,2.17
* CDR	Cancel Direct Route Activated	Activates the cancel direct route circuit to signal the distant offices via the (nonoperated) MCD routes when the SQH threshold is reached.	2.16,2.17,2.19
* CSQT	Cancel SQ Delay Timing	Bypasses the SQ timing interval so that cancellation signal is sent to the distant offices as soon as the SQL or SQH threshold is reached.	2.08, 2.09
* MCA 0—39	Manual Cancellation of Alternate Routes	If operated while alternate route cancellation is in effect (automatically or manually), this key will lock in cancellation on the individual route. If operated when cancellation is not in effect, this key will exclude the route from cancellation.	2.07, 2.12
* MCAR	Manual Cancellation of Alternate Routes Activated	Triggers cancellation of direct routes. Bypass sender queue circuits and timers so that signal is sent immediately and cancellation remains in effect on all but excluded routes (see MCD keys) until MCDR key is released.	2.11
* MCD 0—19	Manual Cancellation of Direct Routes	If operated while direct route cancellation is in effect, this key will lock in cancellation on the individual route. If operated when cancellation is not in effect, this key will exclude the route from cancellation.	2.07, 2.19

* Key-lamps which light when operated.

TABLE A (Cont)

TRAFFIC CONTROL CONSOLE FEATURES

KEYS	DESIGNATION	FUNCTION	MAIN PARAGRAPH REFERENCE
* MCDR	Manual Cancellation of Direct Routes Activated	Triggers cancellation of direct routes bypasses sender queue circuits and timers so that signal is send immediately and cancellation remains in effect on all but excluded routes (see MCD keys) until MCDR key is released.	2.18
MMQ	Manual Marker Queue Initiated	Triggers cancel short sender timing bypassing the MQ and MT timers so that CSST takes effect at once and remains in until key is released.	2.05
* MQ	Marker Queue Initiated	Activates marker queue circuit.	2.04
* MS	Master Switch	Turns on console.	2.02, 2.08, 2.17
* MSQH	Manual Sender Queue High	Triggers sender queue high control.	2.17
* MSQL	Manual Sender Queue Low	Triggers sender queue low controls.	2.10
* MSST	Manual Cancellation of Short Sender Timing	Triggers cancel short sender timing.	2.06
RCD	Recorder Transfer	Turns on pen recorder.	2.08
* SQ	Sender Queue Start	Activates the sender queue circuit	2.08, 2.16

* Key-lamps which light when operated.

TABLE A (Cont)

TRAFFIC CONTROL CONSOLE FEATURES

LAMPS	DESIGNATION	FUNCTION	MAIN PARAGRAPH REFERENCE
ACK 0—39	Alternate Routes Cancelled Check	Lights when the distant office returns a signal acknowledging receipt of a cancel alternate route signal.	2.07,2.08,2.10 2.12
AMB	All Markers Busy	Lights when all markers in the tandem are busy; goes out as soon as one marker is idle.	2.04
ARCK	Alternate Route Cancellation Check	Lights when the CAR (cancel alternate route), relays operate, indicates a cancellation signal has been sent. The lamp is lighted: (1) When MCAR key is operated, (2) the CAR key is operated and the sender queue low level has been reached, or (3) the MSQL key is operated.	2.08, 2.10
* CAL	Calibrate	Associated with calibration key for sender queue levels. Lights when key is operated.	2.08
* CALH	Calibrate High	Associated with calibration key for sender queue high level. Lights when key is operated.	2.08
* CAR	Cancel Alternate Route	Associated with CAR key lamp, lights when key is operated.	2.08,2.10,2.16
CARF	Alternate Routes Failed to Cancel	Lights when distant office does not return a signal acknowledging receipt of a cancellation signal initiated by MSQL key. (Does not operate with MCAR key because the CARF bypasses CAR relay circuit).	2.22
* CDR	Cancel Direct Route	Associated with CAR key, lamp lights when key is operated.	2.16,2.17,2.19

* Key-lamps which light when operated.

TABLE A (Cont)

TRAFFIC CONTROL CONSOLE FEATURES

LAMPS	DESIGNATION	FUNCTION	MAIN PARAGRAPH REFERENCE
CDRF	Direct Routes Failed to Cancel	Lights when distant office does not return a signal acknowledging receipt of a cancellation signal initiated by MSQH. (Does not operate with MCDR key because the CDRF bypasses CDR relay circuit.)	2.22
* CSQT	Sender Queue Timing Cancelled	Associated with CSQT key, lamp lights when key is operated.	2.08,2.16
CSST	Cancel Short Sender Timing	Lights when short sender timing is cancelled either automatically or manually.	2.04, 2.07
CSTF	Failed to Cancel Short Sender Timing	Lights when the intersender timing circuit does not respond properly to CSST signal.	2.04,2.22
DCK 0—19	Direct Routes Cancelled Check	Lights when the distant office returns a signal acknowledging receipt of a cancel direct route signal.	2.07,2.16 through 2.19
DRCK	Direct Route Cancellation Check	Lights when the CDR (cancel direct route), relays operate; indicates a cancellation signal has been sent. The lamp is lighted: (1) When MCDR key is operated, (2) the CDR key is operated and the SQH threshold has been reached, or (3) the MSQH key is operated.	2.16,2.17, 2.18
FRC	Routes Cancelled Falsely	Lights when CAR or CDR relays operate sending a false cancellation signal when the corresponding automatic or manual cancellation equipment is normal.	2.22
FRK	False Cancellation Check	Lights when the distant office fails to acknowledge receipt of a cancellation signal. The ACK or DCK associated with the route(s) will not light.	2.22

* Key-lamps which light when operated.

TABLE A (Cont)

TRAFFIC CONTROL CONSOLE FEATURES

LAMPS	DESIGNATION	FUNCTION	MAIN PARAGRAPH REFERENCE
* MCA 0—39	Manual Cancellation of Alternate Routes	Lights when associated MCA key is operated. A lighted MCA lamp may mean either that cancellation is locked in on the associated route or that the route is excluded from cancellation. (If excluded, ACK lamp is out).	2.07,2.12
* MCAR	Manual Cancellation of Alternate Routes Activated	Lights when associated MCAR key is operated.	2.11
* MCD 0—19	Manual Cancellation of Direct Routes	Lights when associated MCD key is operated. A lighted MCD lamp may mean either that cancellation is locked in on the associated route or that the route is excluded from cancellation. (If excluded, DCK lamp is out.)	2.07,2.19
* MCDR	Manual Cancellation of Direct Routes Activated	Lights when associated MCD key is operated.	2.18,2.19
* MS	Master Switch	Lights when associated MS key is operated.	2.02,2.17
* MMQ	Manual Marker Queue	Lights when the associated MMQ key is operated.	2.05
* MQ	Marker Queue	Lights when the associated MQ key is operated.	2.04
MQA	Marker Queue Activated	Lights when MQ relay operates; indicates cancel short sender timing signal has been sent.	2.04
* MSQH	Manual Sender Queue High	Lights when the associated MSQH key is operated.	2.17
* MSQL	Manual Sender Queue Low	Lights when the associated MSQL key is operated.	2.10
* MSST	Manual Cancellation of Short Sender Timing	Lights when the associated MSST key is operated.	2.06
RD 0—3	Routes Denied	These lamps are manufacture discontinued.	2.29

* Key-lamps which light when operated.

TABLE A (Cont)

TRAFFIC CONTROL CONSOLE FEATURES

LAMPS	DESIGNATION	FUNCTION	MAIN PARAGRAPH REFERENCE
* SQ	Sender Queue	Lights when the associated SQ key is operated.	2.08,2.10
SQH	Sender Queue High	Lights to indicate a high level output of the sender queue circuit.	2.08,2.16
SQL	Sender Queue Low	Lights to indicate a low level output of the sender queue circuit.	2.08
STCK	Cancelled Short Sender Timing Check	Lights when the cancel short sender timing relay operates.	2.04,2.06,2.22

OTHER RELATED EQUIPMENT	DESIGNATION	FUNCTION	MAIN PARAGRAPH REFERENCE
T — CAL — U	Tens and Units Calibration Selector Switches	Rotary switches used to connect selected number of inputs to sender queue circuits.	2.07, 2.08
SQL and SQH	Potentiometer Dials	Used to adjust triggering points of sender queue indicator circuits.	2.08
3-Posn. Key OFF-A-B	Strip Chart Pen Recorder Selector Switch	Used to turn on Pen Recorder and to select recording of sender group A or B.	2.08,2.27
Timers:			
MQ, MT	Marker Queue Circuit	These timers are in the marker queue detector circuit; they determine when and for how long automatic cancel short sender timing is in effect.	2.22
SQ, LT, HT	Sender Queue Circuit	These timers are in the sender queue discriminator circuit; they determine when and for how long automatic sender queue low and sender queue high controls are in effect.	2.22
RC	Record Total Time Sender Queue Controls in Effect	The timer is associated with CAR and CDR relays; it operates once each second that cancellation is in effect and scores the appropriate peg count register.	2.23

* Key-lamps which light when operated.

TABLE A (Cont)

TRAFFIC CONTROL CONSOLE FEATURES

OTHER RELATED EQUIPMENT	DESIGNATION	FUNCTION	MAIN PARAGRAPH REFERENCE
FK, DF, AFA, AFB	Failure to Receive Acknowledgment Signal	These timers are in the route cancellation circuitry and detect failures and false cancellations.	2.22
CRT	Cancel Route Transfer Signal Keys	These are part of the Common Systems DOC Signaling Circuit. 30 of these Keys or Jacks, and Lamps can be installed in Subtending No. 1 and No. 5XB offices.	6.04, 7.02

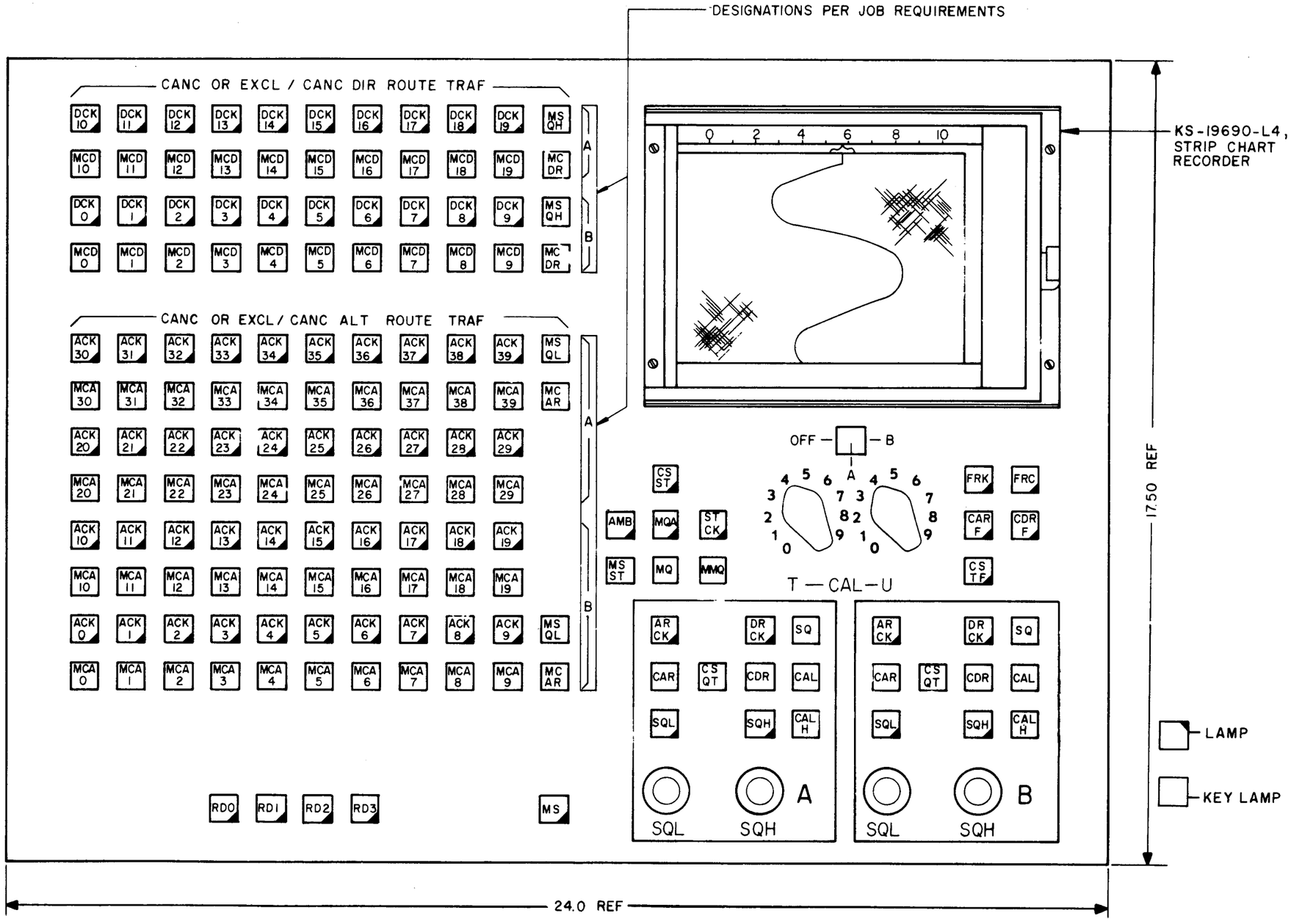

Fig. 1—Traffic Control Console

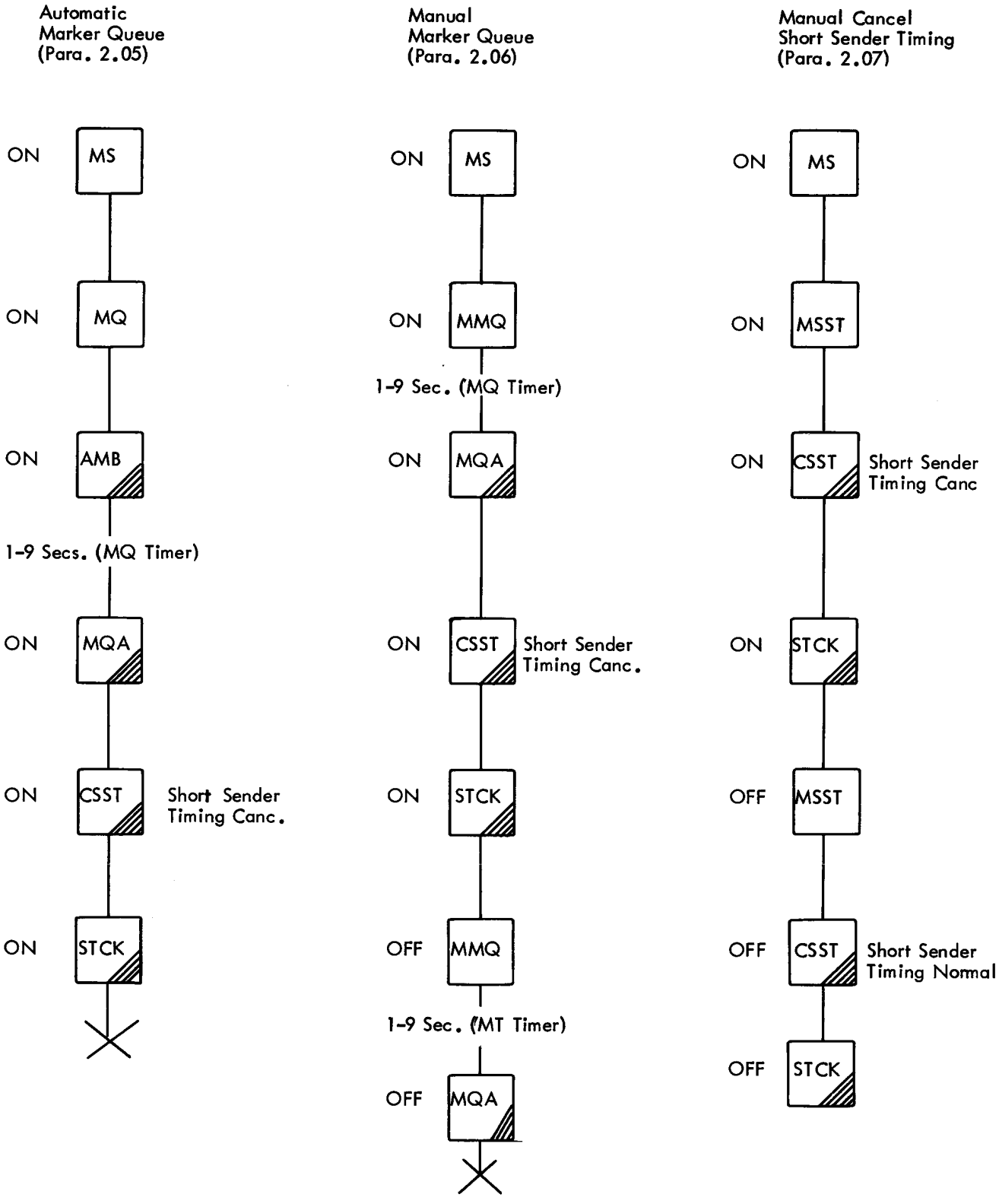

Fig. 2—Cancel Short Sender Timing

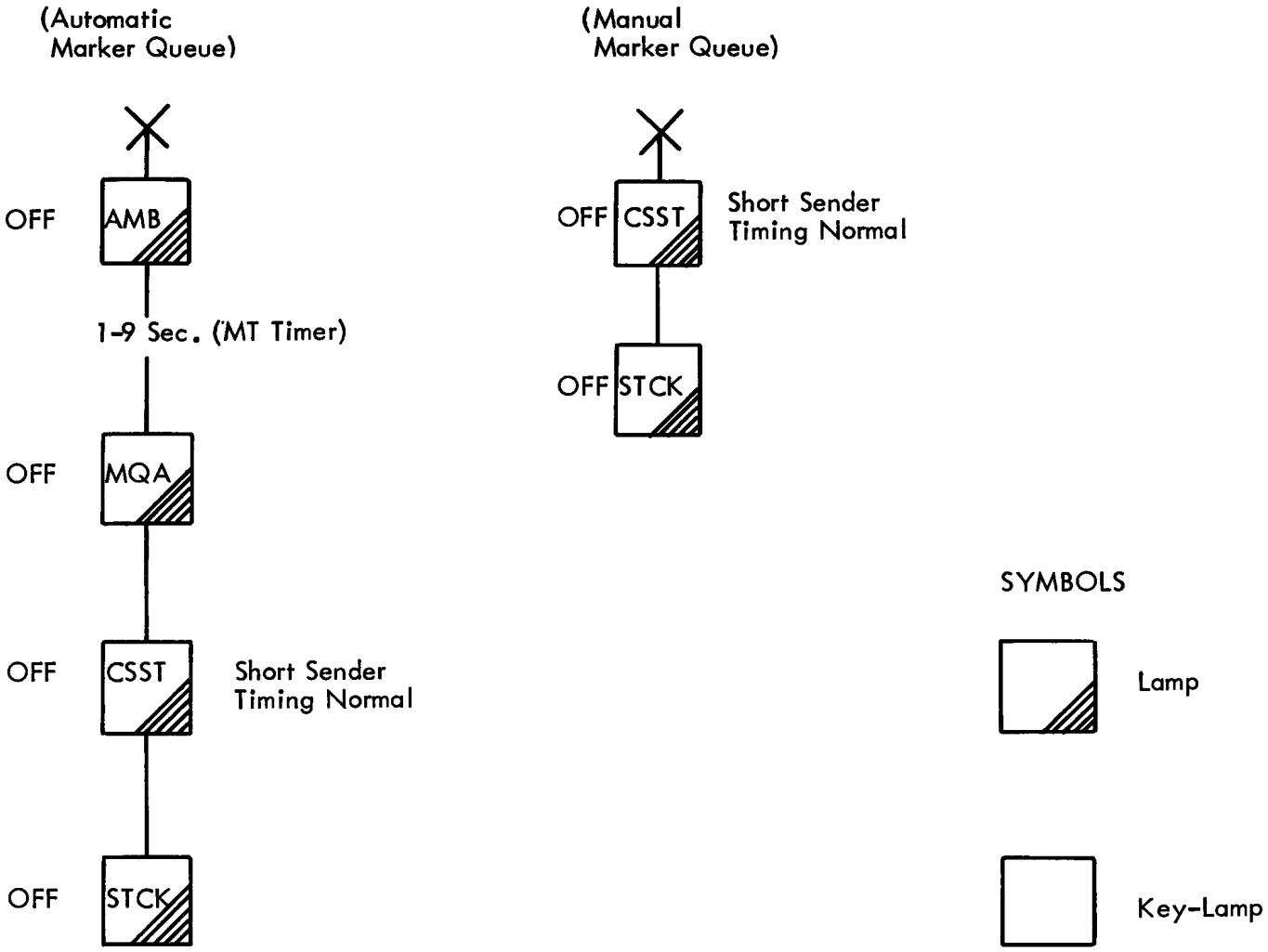

NOTE:

In these diagrams, the lamps are shown as operating in a definite sequence which corresponds to the sequence of the relay operations. However the action is so fast that two or more lamps (such as the MQA, CSST and STCK lamps in the diagram above) will often go on or off almost simultaneously.

Fig. 2—Cancel Short Sender Timing Pg. 2

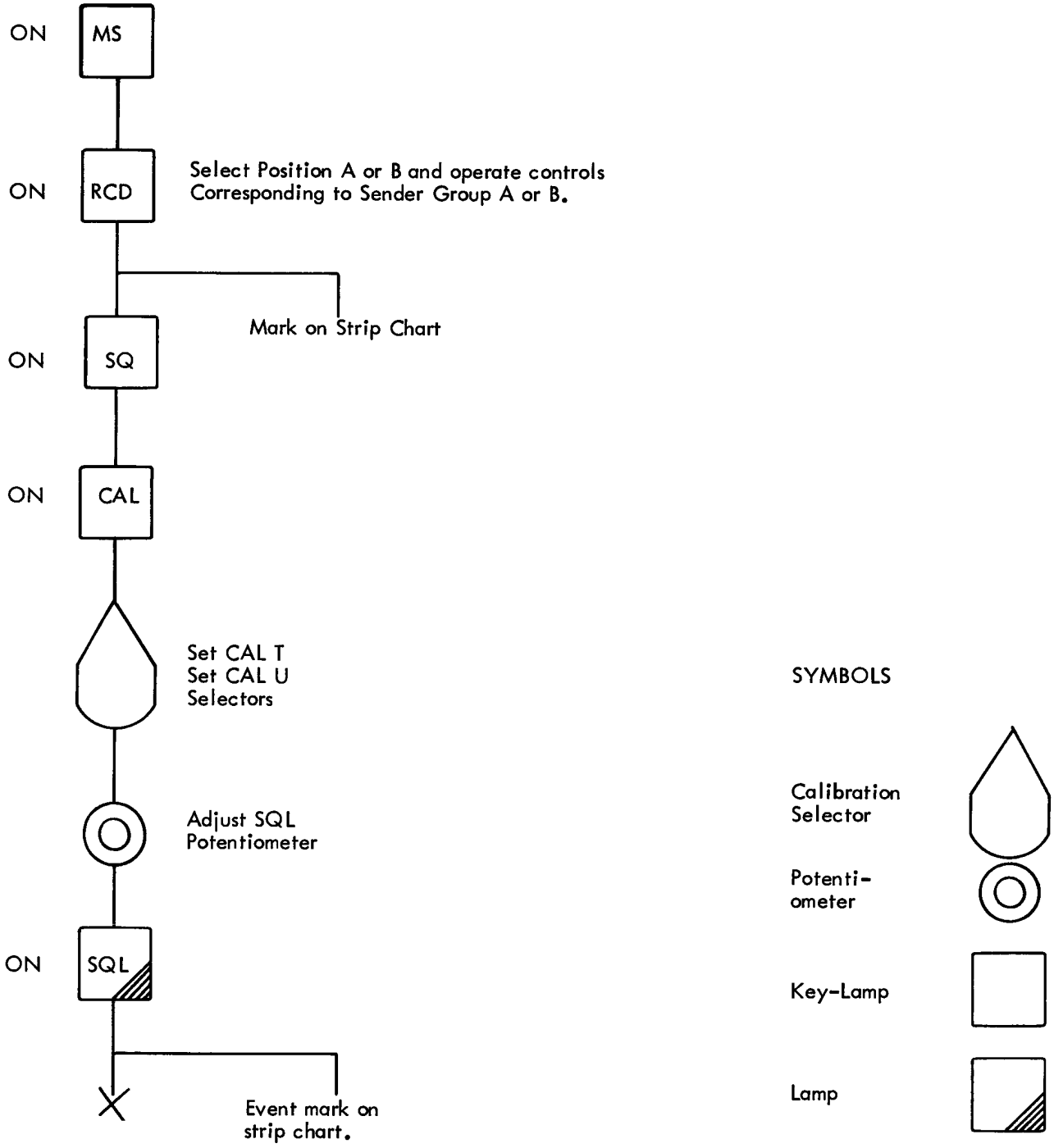

Fig. 3—Calibration of Sender Queue Levels

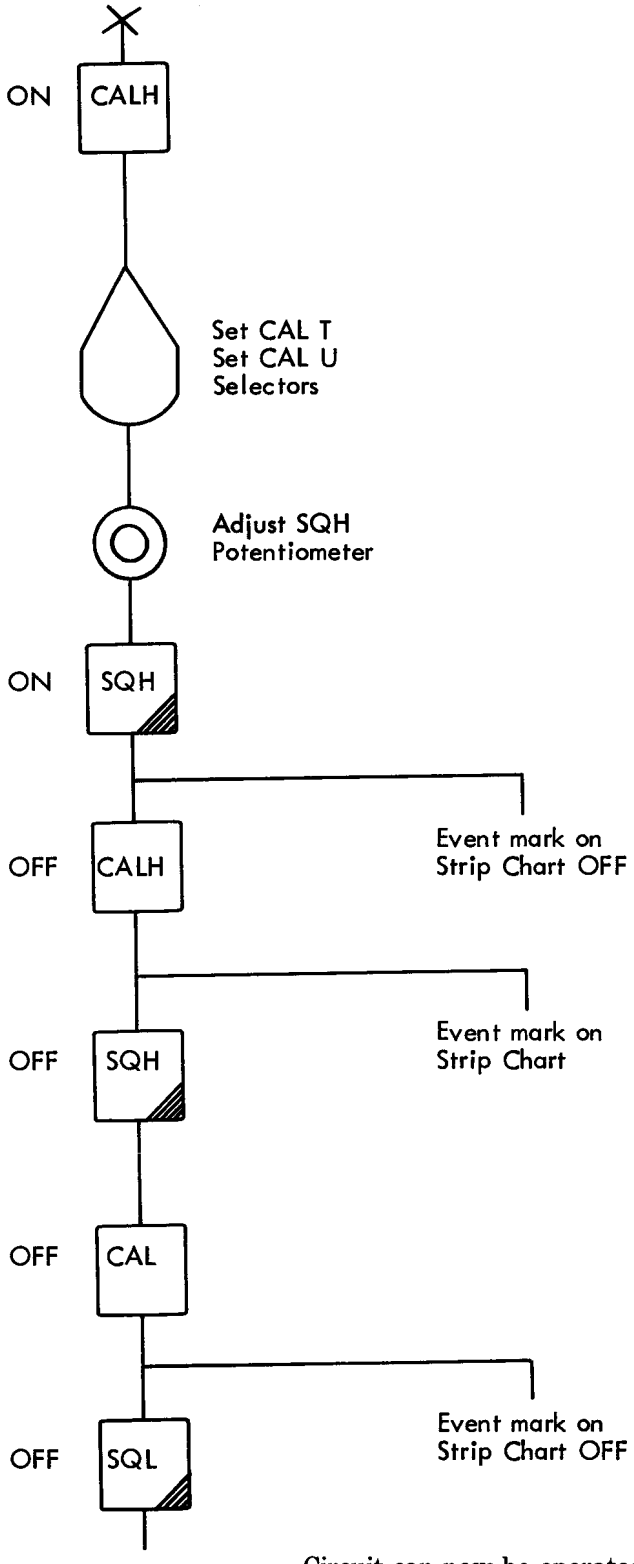

Circuit can now be operated dynamically, see Fig. 4

Fig. 3—Calibration of Sender Queue Levels

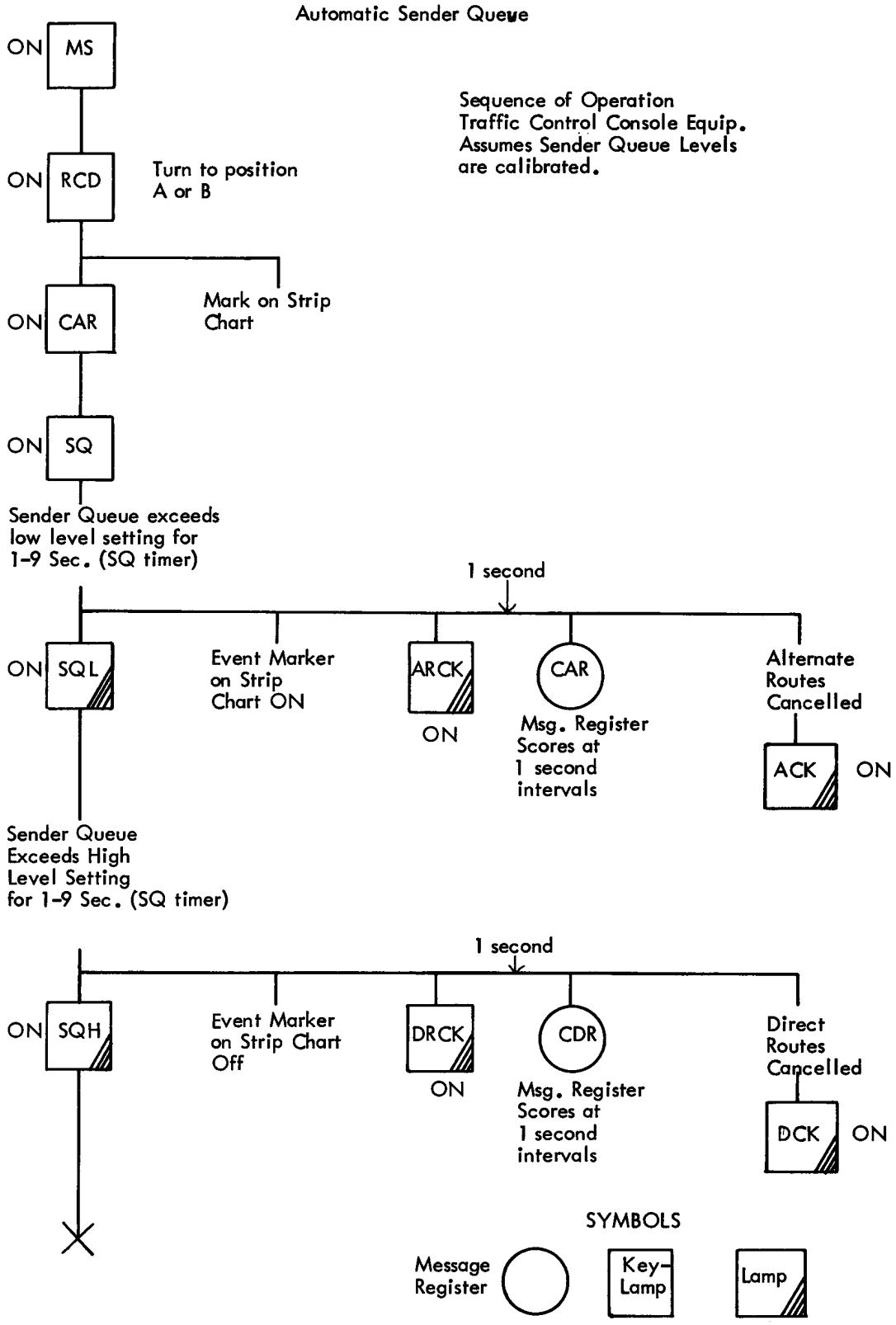

Fig. 4—Alternate and Direct Route Cancellation

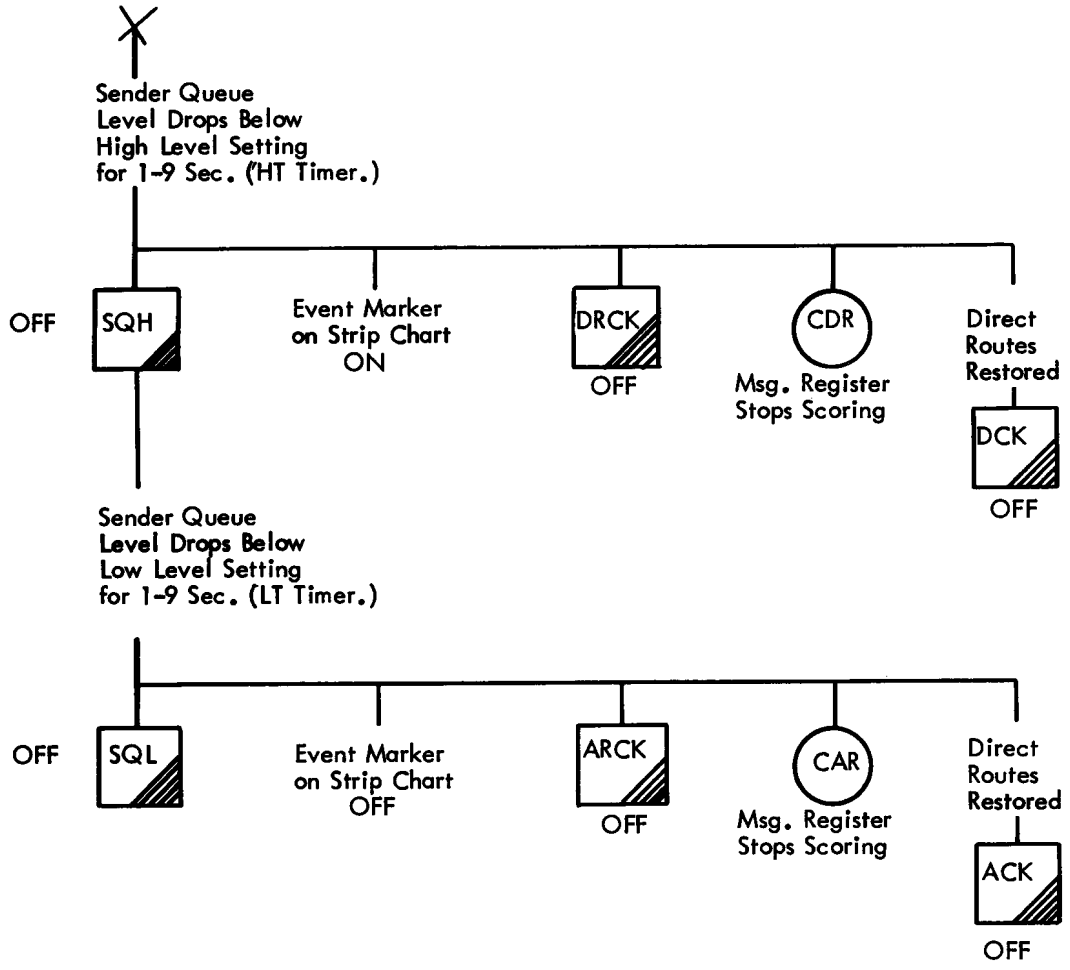

Fig. 4—Alternate and Direct Route Cancellation

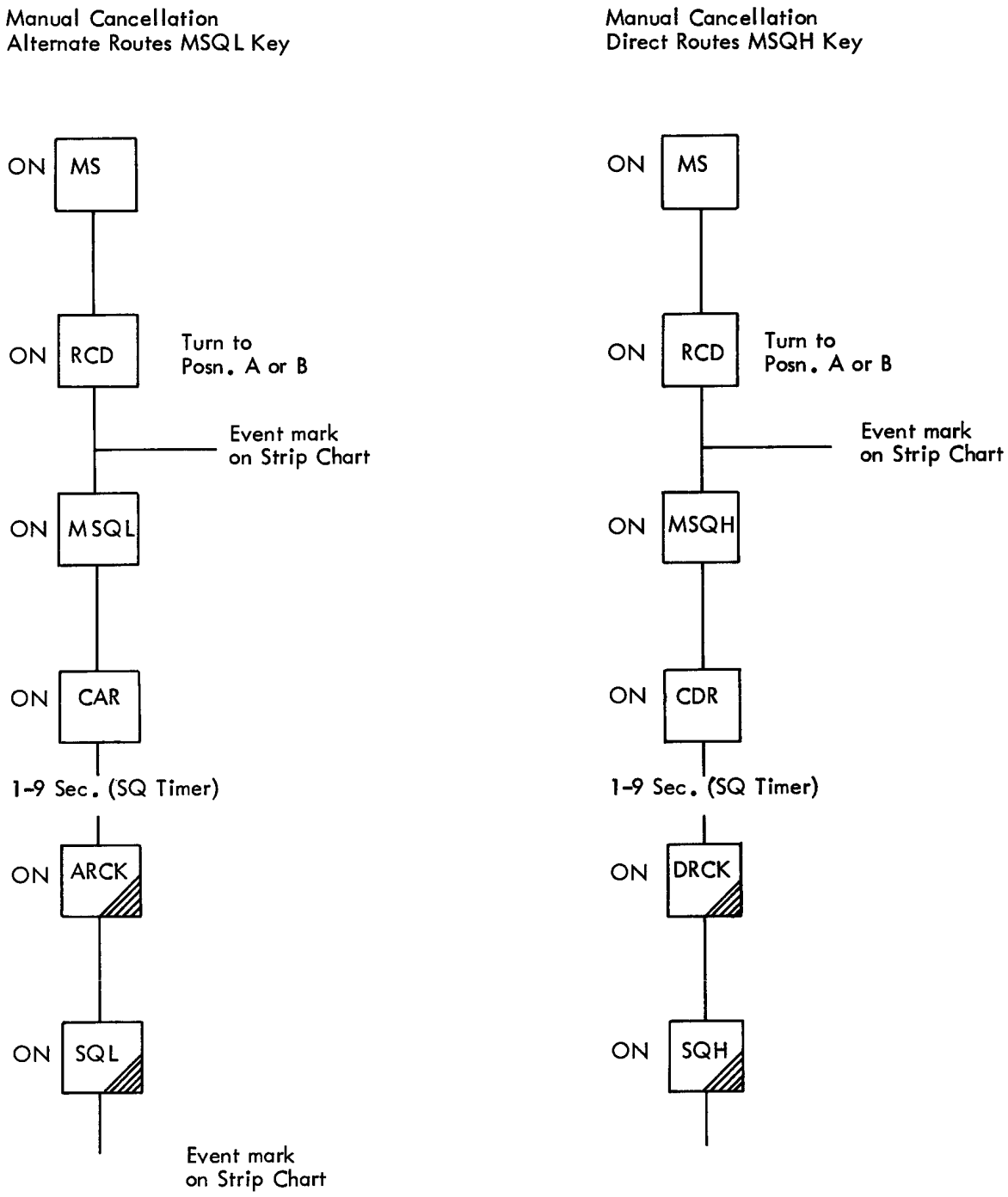

Circuit will now operate as shown in Fig. 4 from the point where the SQL or SQH lamp lights except control will be continuously in effect until MSQL or MSQH Key is released and LT or HT timing has elapsed.

Fig. 5—Manual Cancellation MSQL, MSQH, or MCAR, MCDR Keys

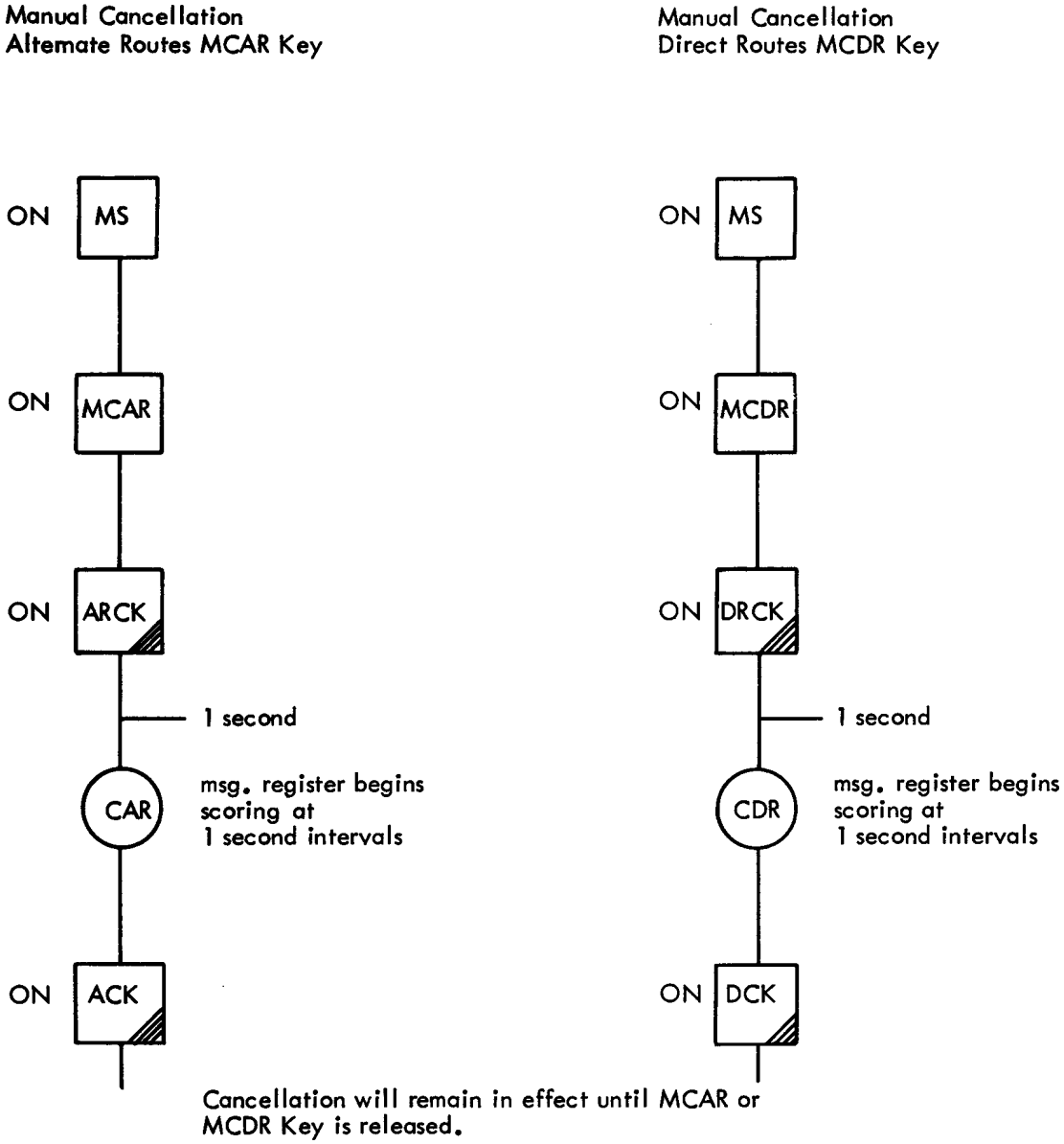

Fig. 5—Manual Cancellation MSQL, MSQH, or MCAR, MCDR Keys

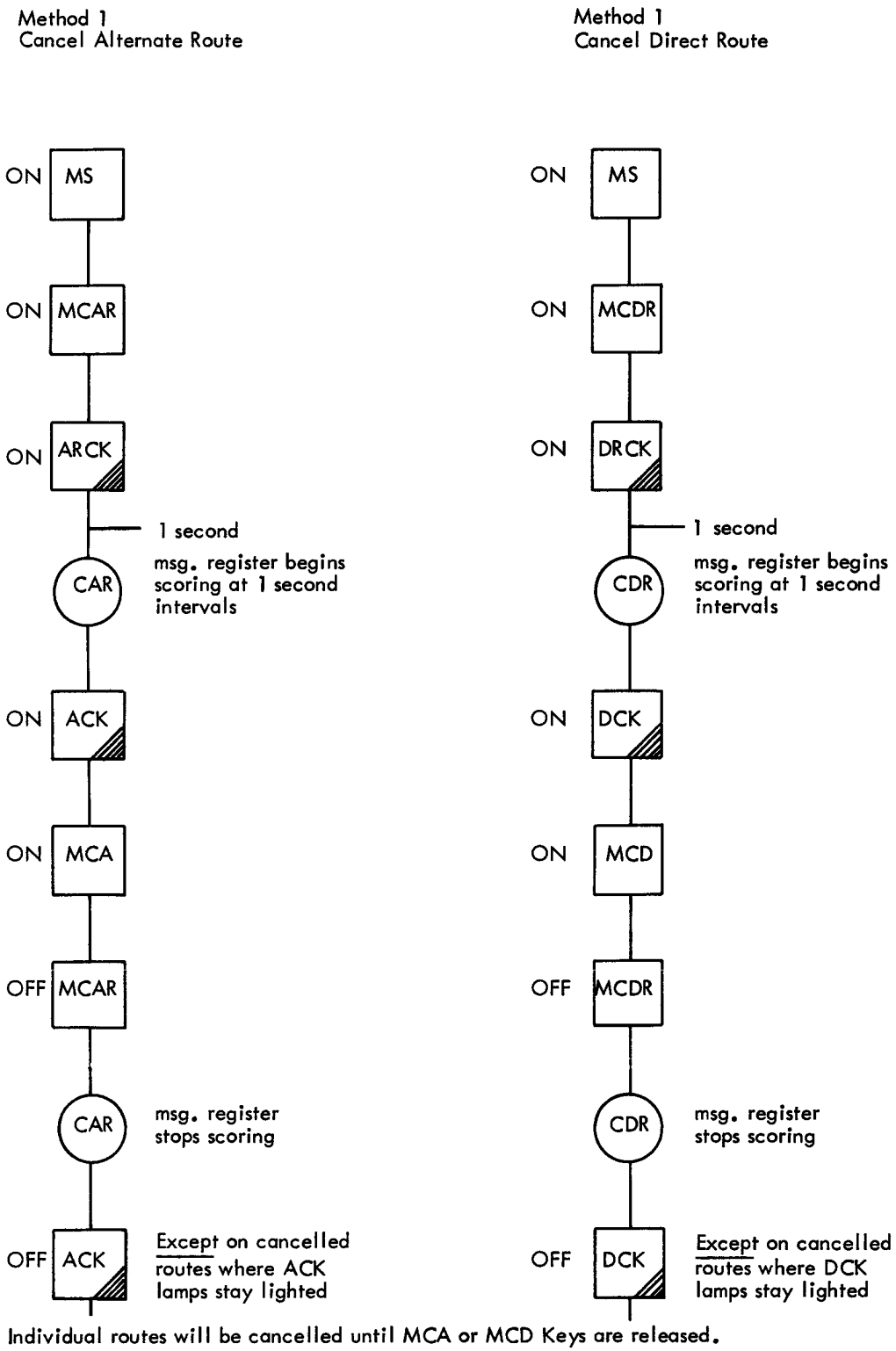

Individual routes will be cancelled until MCA or MCD Keys are released.

Fig. 6—Cancel Individual Routes Methods 1 & 2

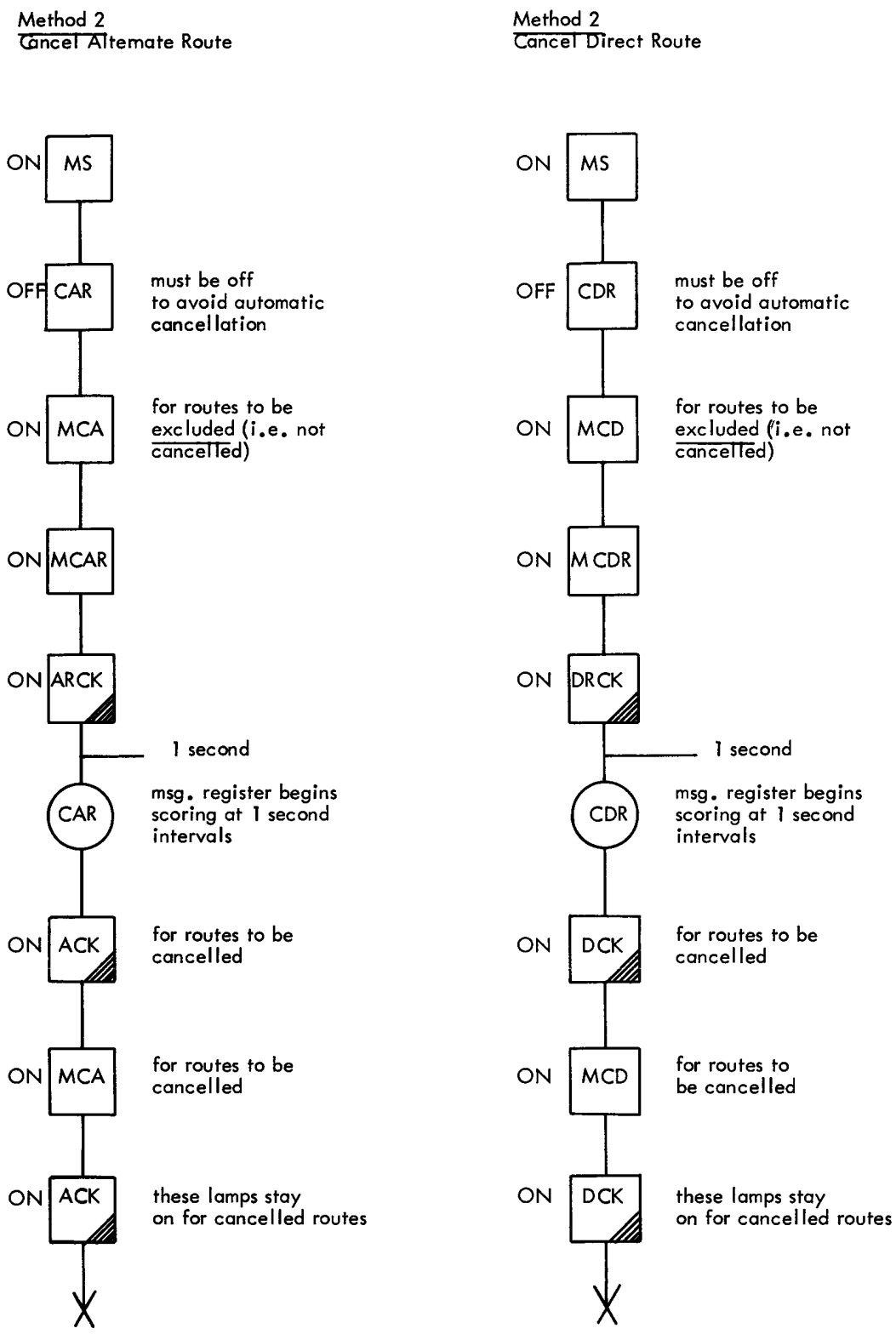

Fig. 6—Cancel Individual Routes Methods 1 & 2

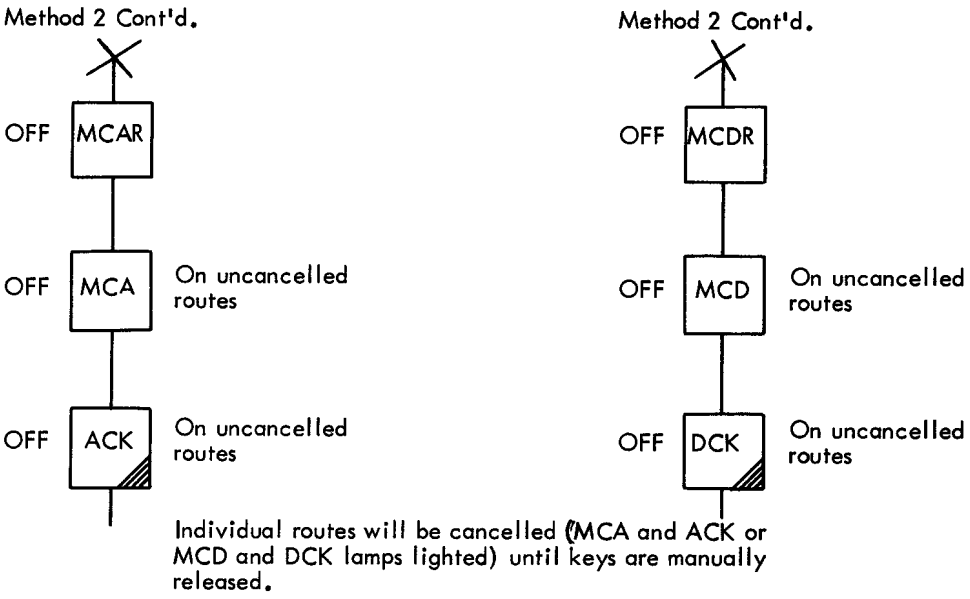

Fig. 6—Cancel Individual Routes Methods 1 & 2

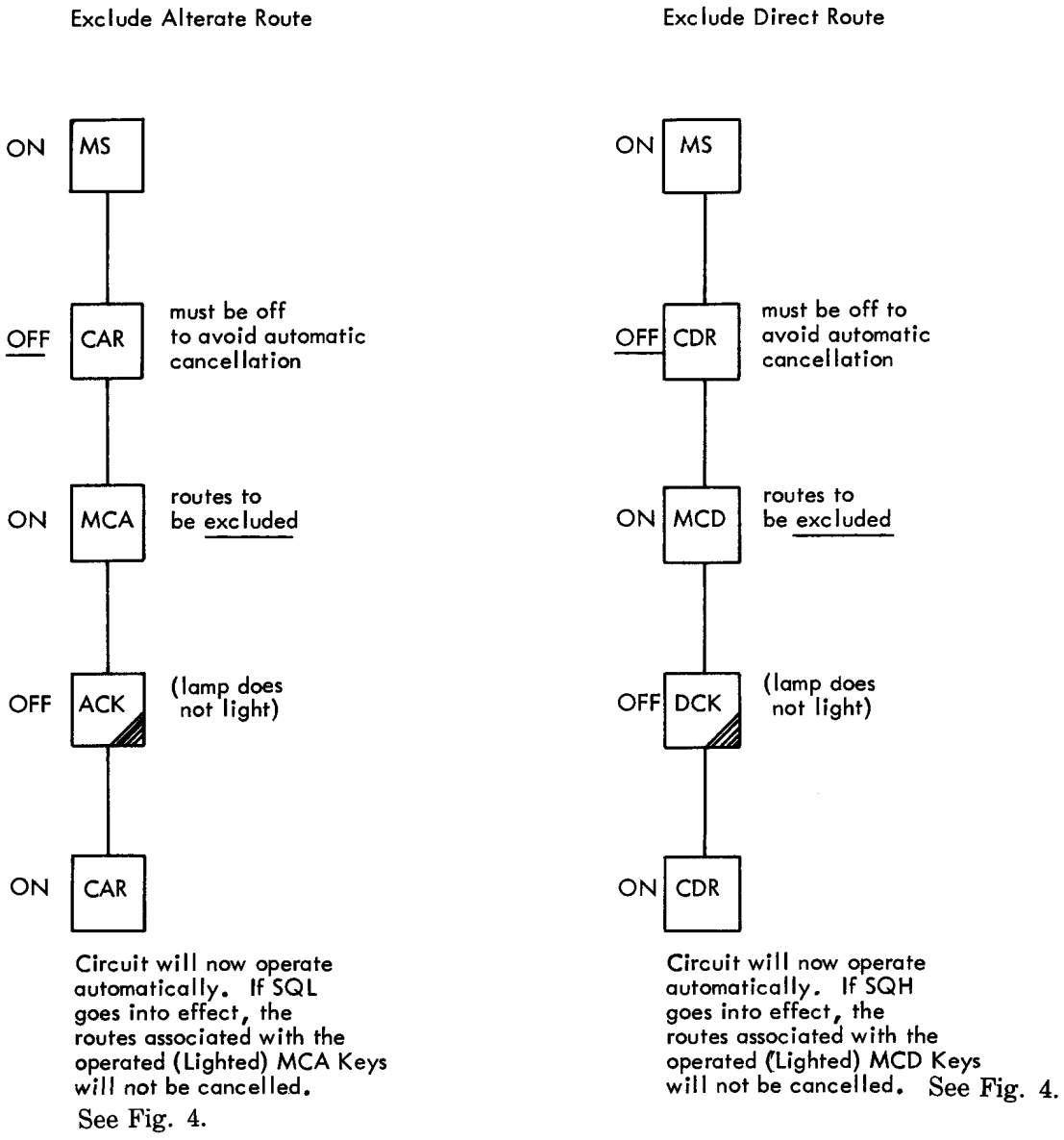

Fig. 7—Individual Route Exclusions

COMMON SYSTEMS DOC SIGNAL CIRCUIT - - SCHEMATIC DIAGRAM

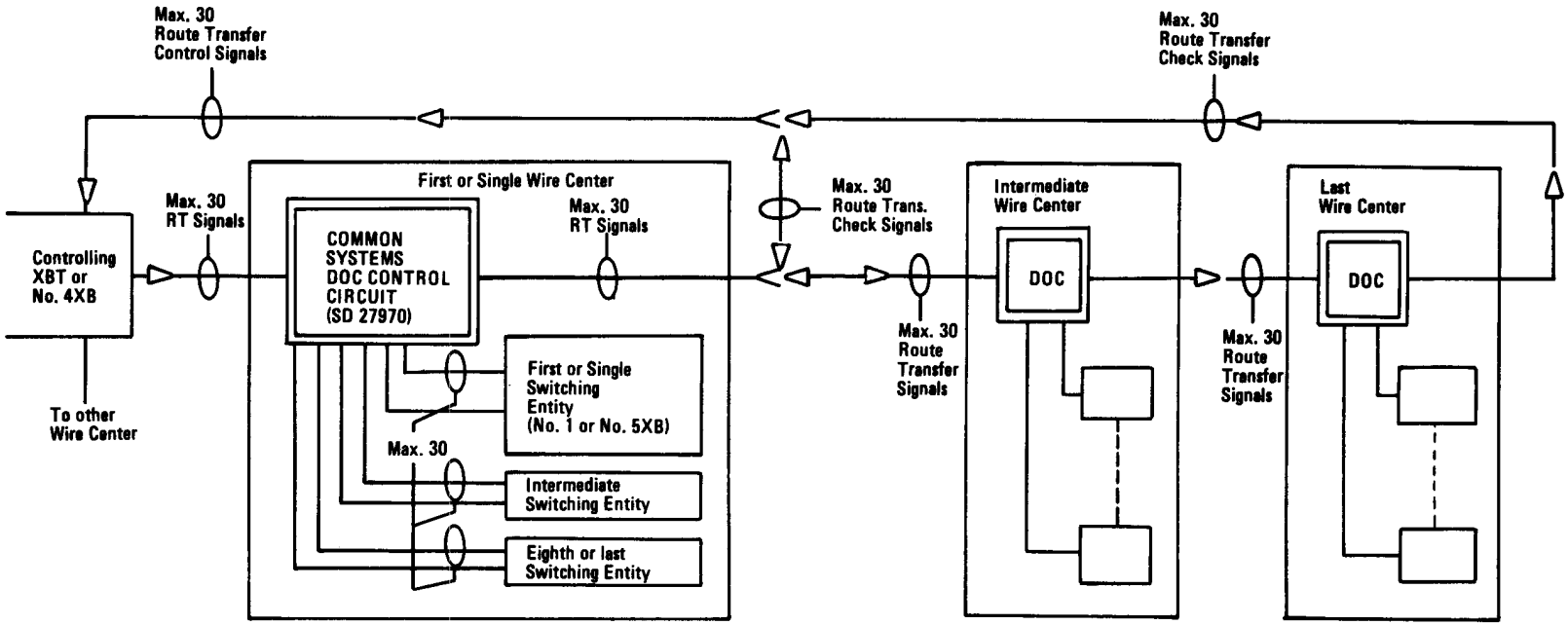

Fig. 8—Common Systems DOC Signal Circuit Schematic Diagram

LIST OF TRAFFIC CONTROL CIRCUIT ASSIGNMENTS

ALT. ROUTE CANCELED MCA KEY#	CONTROLLED OFFICE	SIGNAL CIRCUIT NUMBER	CONTROL ACTION	CONTROL REROUTES TO:
00	ANHM0163G	GZT018	CANC 100% AIT. RT.	T&A TRUNKS
01	ANHM0177C	GZT019	SKIP ROUTE	ANHM 4A
02	ANHM1182K	GZT317	CANC 33 1/3 % HTR	T&A TRUNKS
03	ANHM1199G	GZT318	CANC 33 1/3 % HTR	T&A TRUNKS
04	ANHM1263G	GZT319	CANC 33 1/3 % HTR,	T&A TRUNKS
			100% AIT. RT.	

DIRECT ROUTE CANCELED MCD KEY#	CONTROLLED OFFICE	SIGNAL CIRCUIT NUMBER	CONTROL ACTION	CONTROL REROUTES TO:
00	ANHM0163G	GZT020	CANC 50% DR	T&A TRUNKS
	ANHM0177C	GZT020	CANC 100% AIT.	T&A TRUNKS
			& 50% DIR. RT.	
01	ANHM1182K	GZT021	CANC 25% ETR,	T&A TRUNKS
			75% HTR.	
	ANHM1263C	GZT021	CANC 25% ETR,	T&A TRUNKS
			75% HTR.	
02	BALB0167E	GZT408	TMB 75%	TONE TRUNKS

Fig. 9—List of Traffic Control Assignment

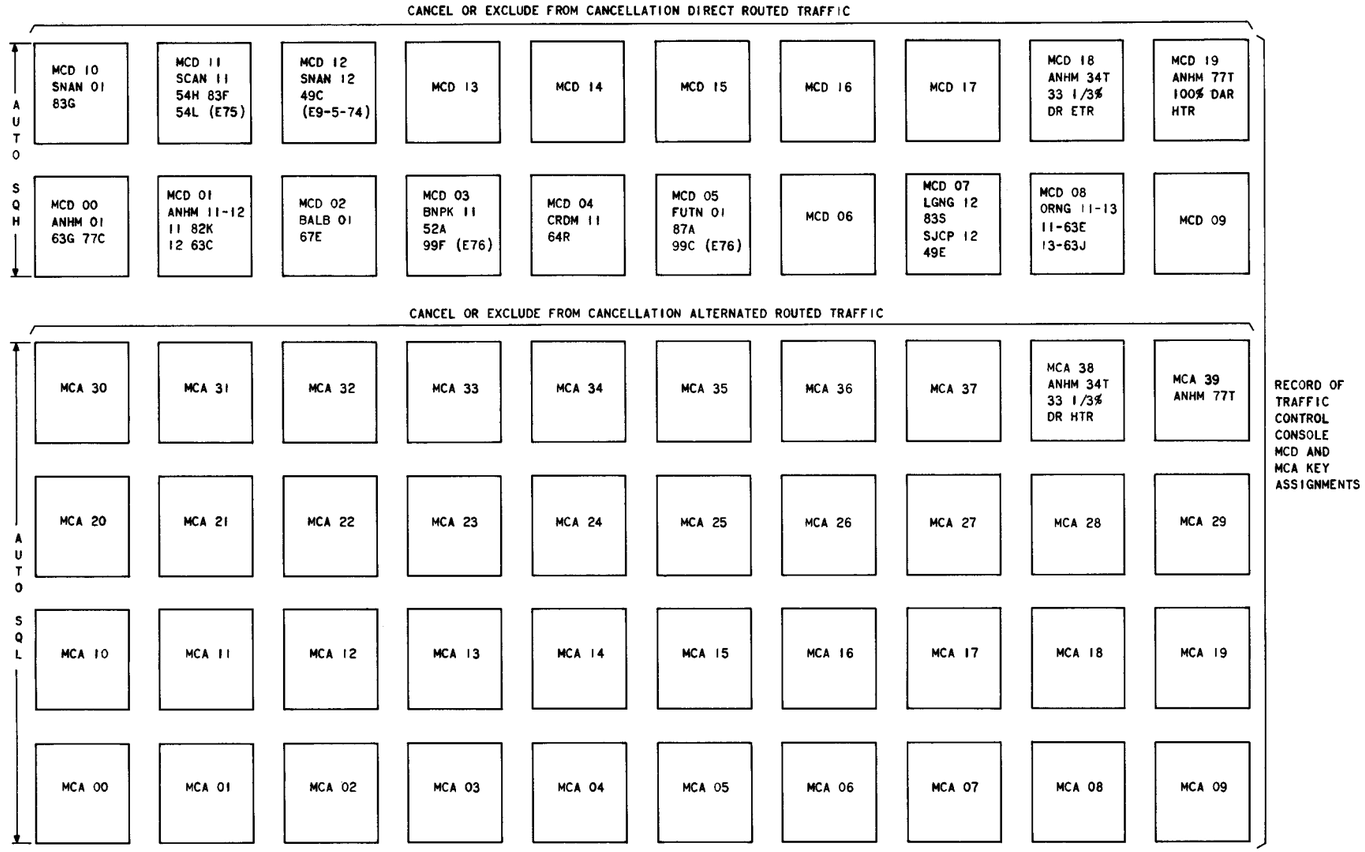

Fig. 10—Cancel or Exclude from Cancellation Direct Routed Traffic

F 1570-1 (8-69)
(T.I.900)

NO. 5XB COMMON CONTROL ORDER - TRANSMITTAL

ORDER CLASSIFICATION: ☐ E ☐ U ☐ S ☐ N ☐ C

DESCRIPTION OF WORK AND REASON FOR ISSUANCE
Please make the assignments shown in the attached sketch to activate Dynamic Overload Controls from ANHM 77T. RT relays in 4 comp. markers will be operated at SQL, in 2 more mkrs at SQH, 3 mkrs not involved.

COORDINATE WITH

OFFICE NAME: ANHMCA1182K

CONTROL NUMBER: * *

ORD. NO.: xXX — XX

T.T.A.B.: X

PREPARED BY:

DUE DATE ON OR BEFORE: — —

TEL. NO.: X

DATE WRITTEN: X

RESCHEDULE DUE DATE: — —

REASON

APPROVED: X

DATE: X

PAGE OF PAGES

ITEM	CORD	DEST.	OFC. IND & DIAL CODE	RATE	TRUNK GROUP NAME	CLASS OF SERVICE	ROUTE RELAY NO.	ROUTE RELAY GS	TRF. REG. PC	TRF. REG. OFL	DIGITS DEL	DIGITS PRE	DIGITS OUT	SND. TYPE GRP.	TB	TG	TRK TYPE	ALT RR
1																		
2																		
3																		
4																		
5																		
6																		
7																		
8																		
9																		
10																		
11																		
12																		
13																		
14																		
15																		
16																		
17																		
18																		
19																		
20																		
21																		
22																		
23																		
24																		

NOTES:

CONTROL OFFICE

DISTRIBUTION

REPRO

☐ ORDER ☐ RESCHEDULE TOT ONLY ☐ COMPLETION NOTICE TOT ONLY

PLANT CONTROL OFFICE FORCE USE ONLY
TO REPORT COMPLETION-CALL _____
ALL OTHER CALL CPB CONTACT _____

COMPLETION REPORT
DATE RECEIVED IN CPB _____
ACTUAL COMPLETION DATE _____

Fig. 11—Sample Order for Dynamic Overload Control Assignments in a No. 5 Crossbar Office

ROUTING SKETCH NO. _____

MKR. GRP. _____ BLDG. _____ OFFICE ANHM 82K # 5 X B

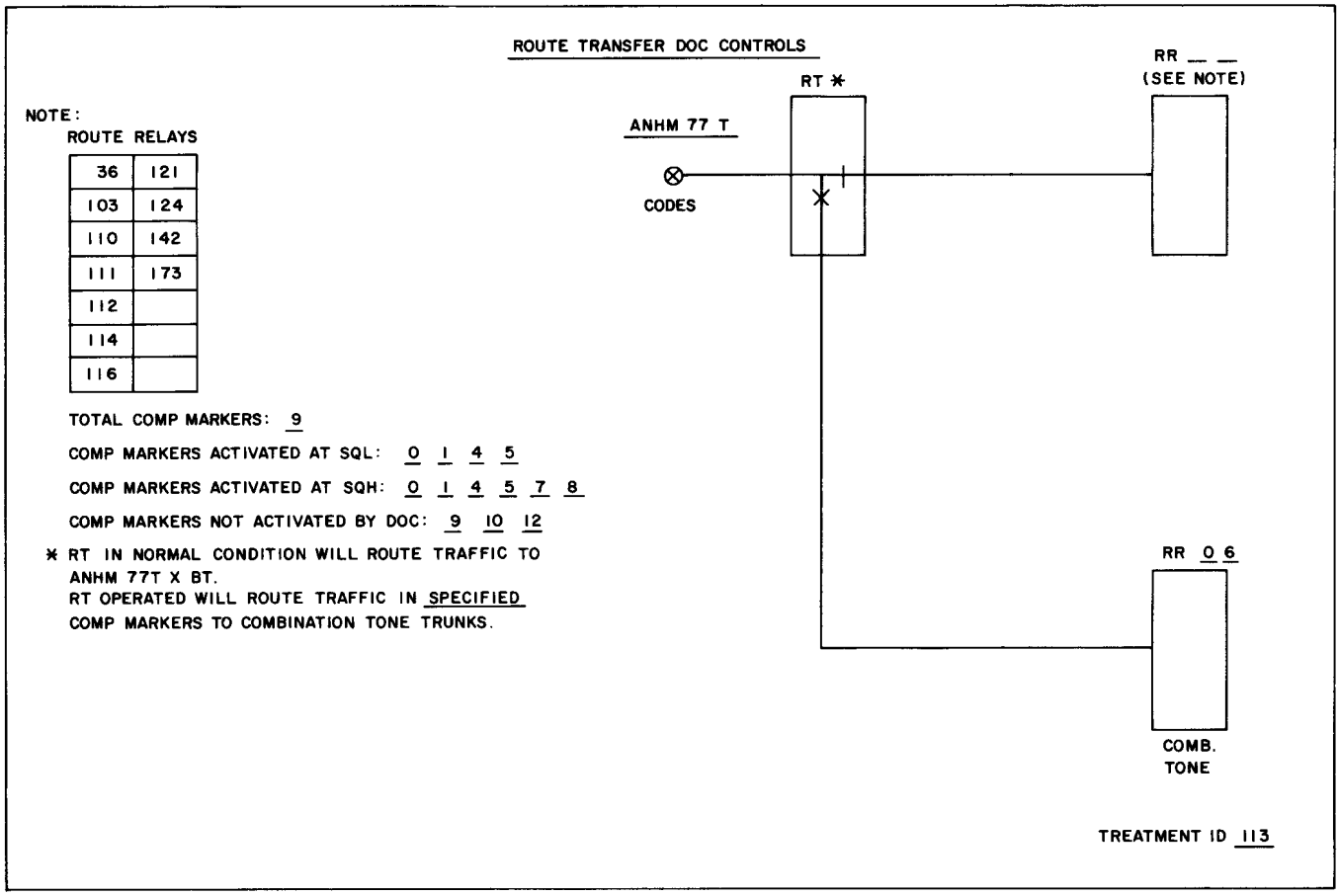

NOTE:

ROUTE RELAYS

36	121
103	124
110	142
111	173
112	
114	
116	

TOTAL COMP MARKERS: 9

COMP MARKERS ACTIVATED AT SQL: 0 1 4 5

COMP MARKERS ACTIVATED AT SQH: 0 1 4 5 7 8

COMP MARKERS NOT ACTIVATED BY DOC: 9 10 12

* RT IN NORMAL CONDITION WILL ROUTE TRAFFIC TO ANHM 77T X BT.
RT OPERATED WILL ROUTE TRAFFIC IN SPECIFIED COMP MARKERS TO COMBINATION TONE TRUNKS.

Fig. 12—Route Transfer DOC Controls