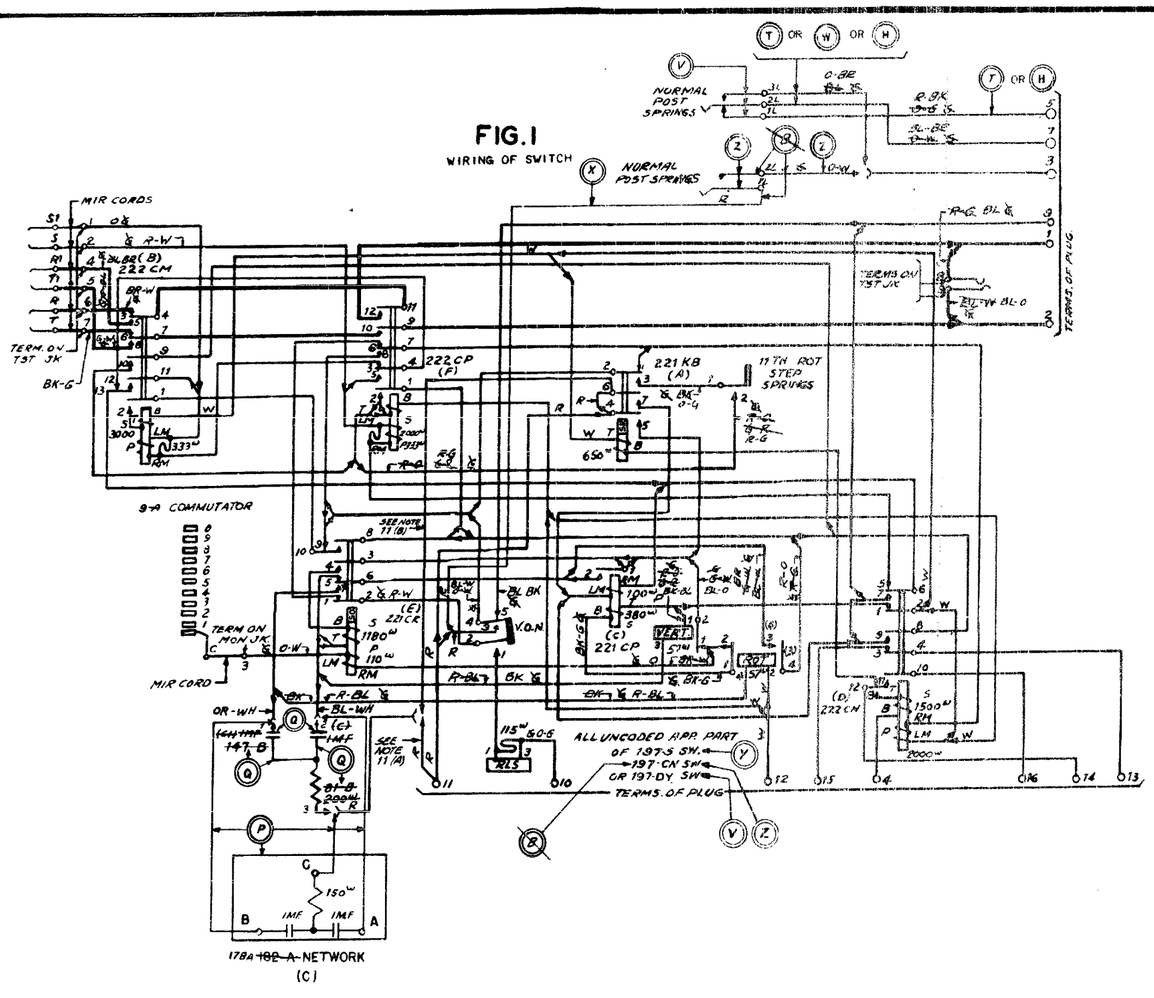

FIG. 1

WIRING OF SWITCH

WIRING DIAGRAM - SCHEMATIC CROSS REFERENCE TABLE ? JOB APPLICATION UNCERTAIN ( ) ITEMS IN PARENTHESES ARE FOR INFORMATION ONLY										
ED-31530-30			SD-31530-01				IF OFFICE RECORDS DO NOT SPEC W D OPTION	THIS OPTION WAS FURNISHED		REMARKS
FIG	WRG	APP	SHEET	FIG	WRG	APP		W D	SCHEM	
1				5		R				
(I)	(P)	P			P	P				AFTER 6-1-42
(I)	(Q)	Q			Q	Q				BEFORE 9-1-41
(I)	(P OR Q)	P OR Q			P OR Q?	P OR Q?				BETWEEN 9-1-41 TO 6-1-42
(I)	(B)	B			—	—				G-2, NO EQUIV. SD OPTION
(I)	H				H					
(I)	T				T					
(I)		V				V				
(I)	W				W					
(I)	X				X					
(I)		Y				Y				
(I)	(Z)	Z			Z	Z				

SEE BANK & JACK WRG DWGS FOR ADDITIONAL OPTIONS

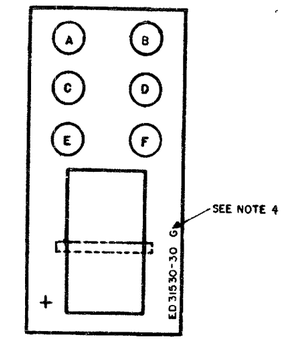

SKETCH A

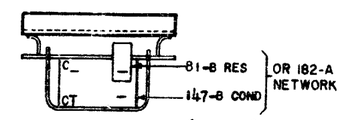

SKETCH B (MFR. DISC.)

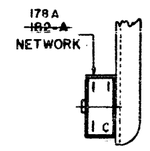

END VIEW REAR COVER

SKETCH C (MFR DISC)

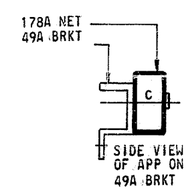

SIDE VIEW OF APP ON 49A BRKT

SKETCH D

TABLE B

ADJ	FDR TERM NO	FINDER POSITION 1	2	3	4	5	6	7	8	9	10
		11	12	13	14	15	16	17	18	19	20
		21	22	23	24	25	26	27	28	29	30
		LEVEL ON WHICH NOR POST SPGS SHALL OPER									
A	11-10	1	0	9	8	7	6	5	4	3	2
B	21-20	2	1	0	9	8	7	6	5	4	3
C	31-30	3	2	1	0	9	8	7	6	5	4
D	41-40	4	3	2	1	0	9	8	7	6	5
E	51-50	5	4	3	2	1	0	9	8	7	6
F	61-60	6	5	4	3	2	1	0	9	8	7
G	71-70	7	6	5	4	3	2	1	0	9	8
H	81-80	8	7	6	5	4	3	2	1	0	9
J	91-90	9	8	7	6	5	4	3	2	1	0
K	01-00	0	9	8	7	6	5	4	3	2	1

RECORD OF FIGS WRG & APP CHANGES						
CHGD ON ISS	IF JOB RECORDS DO NOT SPEC	THIS OPTION WAS FURN	SEE ENG NOTE	RATING STD	A & M	MD
8	B WRG & APP	NONE	53	B		
11	Y OR ~~X~~ Z	Y	53	Y,Z		
11	W,T OR X	~~X~~ X	53 & 55	W,T		X
11	V,Y OR ~~X~~ Z	~~X~~ Z	53	V,Y		B,Z
17	P OR Q WRG & APP	Q	53 & 57	P		Q
22	"H" WRG	T OR W	53 & 55	H,T,W		

ENGINEERING NOTES

51.

THIS DRAWING AGREES WITH	ISSUE	17	20	22	29				
SD-31530-01	ISSUE	16	17	19	23				
ED-31530-01	ISSUE	7		9	10				
BSP AA231.101 (J32001)	ISSUE		9		10 APP 1				
BSP AA231.103 (J32003)	ISSUE		7 APP 6		9				
BSP AA231.104 (J32004)	ISSUE		6 APP 8		7				

52. CONN DWGS:

T-31530-14 ASSOCIATED JACK WIRING
T-31530-18,-19 OR -20 WIRING OF BANKS & COMMS

53. SPECIFY GROUPS, FIGURES AND OPTIONS IN ACCORDANCE WITH TABLE "A"

54. G-1 IS FOR USE WITH:

(A) A LINE GROUP ARRANGED FOR ONE CLASS OF SERVICE ONLY (CONSIDER FLAT RATE AND INDIVIDUAL MESS RATE SERVICE, WHEN COMBINED IN THE SAME LINE FINDER UNIT, AS ONE CLASS)

(B) A LINE GROUP HAVING PREPAYMENT COIN LINES WITHOUT LONG LINE CKTS OR WITHOUT CLASS OF SERVICE TONE

(C) A TANDEM TRUNK GROUP

(D) AN INTERCEPTING TRUNK GROUP ARRANGED FOR ONE TYPE OF INTERCEPTING, EITHER REGULAR INTERCEPTING OR TROUBLE INTERCEPTING

55. G-3 IS FOR USE WITH:

(A) A LINE GROUP NOT CONNECTED TO PREPAY COIN LINES AND ARRANGED TO DISCRIMINATE BETWEEN 2 CLASSES OF SERVICE, (FLAT RATE AND INDIVIDUAL MESS RATE CONSIDERED AS ONE CLASS WHEN COMBINED IN THE SAME LINE FINDER UNIT), AND ALSO ARRANGED FOR CLASS OF SERVICE TONE, RESTRICTED SERVICE OR POSTPAY COIN LINES ON SPECIFIED LEVELS

(CONTINUED AT RIGHT)

ENGINEERING NOTES (CONT'D)

(B) A LINE GROUP HAVING PREPAYMENT COIN LINES WITH LONG LINE CKTS

(C) AN INTERCEPTING TRUNK GROUP ARRANGED FOR INTERCEPTING BOTH REGULAR CALLS AND CALLS FROM LINES PLUGGED UP FOR TROUBLE

(D) A LINE GROUP WITHOUT PREPAY COIN TRUNKS AND ARRANGED FOR CLASS OF SERVICE TONE ON SPECIFIED LEVELS WITH RESTRICTED SERVICE ON ALL REMAINING LEVELS

(E) A LINE GROUP HAVING PREPAY COIN LINES WITHOUT LONG LINES BUT ARRANGED FOR CLASS OF SERVICE TONE ON SPECIFIED LEVELS

56. WHEN ~~G-2~~ G-3 IS PROVIDED, SPECIFY ADJUSTMENT OF NORMAL POST SPRINGS PER ADJUSTMENT A TO K OF TABLE B AS REQ'D. NORMAL POST SPRINGS TO BE ADJUSTED TO MAKE CONTACT ON LEVELS (FDR TERM NO'S) ASSIGNED FOR RESTRICTED SERVICE LINES POST PAY COIN LINES, DIAL PREPAYMENT COIN LINES WITH LONG LINE CKTS, DIAL PREPAYMENT COIN LINES WITH CLASS OF SERVICE TONE OR FOR PLUGGING UP INTERCEPTING TRUNKS.

57. (A) JOBS MANUFACTURED BEFORE 9-1-41 FURNISHED "Q" WRG & APP.
(B) JOBS MANUFACTURED AFTER 6-1-42 FURNISHED "P" WRG & APP.
(C) JOBS MANUFACTURED BETWEEN 9-1-41 TO 6-1-42 FURNISHED "P" OR "Q" WRG & APP.

~~58. WHEN G-3 IS PROVIDED THE ENGINEER SHALL SPECIFY, ON JOB WIRING LIST DWG, THE WIRING OPTION USED ON EACH LINE GROUP.~~

SHOP	INST	MANUFACTURING NOTES:
X		1. WIRES NOT OTHERWISE SPEC'D TO BE ~~24G~~ 24BG.
X		2. DESIGNATIONS ON TERMS OF APP ARE FOR WIRING INFORMATION ONLY
X		3. LEADS NOT OTHERWISE COLORED TO BE GREEN
X		4. THE GROUP NUMBER OF THE SWITCH ORDERED SHALL BE STAMPED ON THE APP MTG PLATE
X		5. THE GROUP NUMBER AT THE TOP OF THE STOCKLIST GRP COLUMN, APPLIES TO ALL ITEMS FOR WHICH GRP DESIGNATIONS ARE NOT SHOWN
~~X~~		~~6. IN ORDER TO FACILITATE SHOP WIRING, WHEN G-3 IS FURNISHED, "T" WIRING SHALL BE PROVIDED IN ALL CASES, ALTHOUGH SOME JOBS MAY ONLY REQUIRE "H" OR "W" WRG~~
X	X	7. WHEN G-3 IS FURNISHED, ADJUST NORMAL POST SPRINGS TO OPERATE ONLY ON THE LEVELS SPEC'D ON JOB ORDER. THE LEVELS ON WHICH NORMAL POST SPRINGS SHALL OPERATE ARE IN ACCORDANCE WITH ADJUSTMENT A TO K OF TABLE A, B
X		8. NUMBERING IN ( ) ON ROT INT SPGS INDICATE WRG SIDE AND ARE FOR WRG INFO ONLY
	X	9. NO LEADS ON THIS DRAWING ARE TO BE RUN BY THE INSTALLER
~~X~~		~~10. WHEN LOCAL CABLES ARE USED FOR WIRES PASSING THROUGH MTG PLT THE ASSOC LOCAL CABLES USED FOR G-1 TO G-3 EQPT ARE AS FOLLOWS:~~
		~~G-1 LC-724-033 G-2 & G-3~~
		~~G-2 LC-724-033 G-2~~
		~~G-3 LC-724-033 G-1 & G-2~~
		11. (A) WRG USED ON SWITCHES MFD ON OR BEFORE APPROX 6-25-53
		(B) WRG USED ON SWITCHES MFD AFTER APPROX 6-25-53

GRP 1,2,3	QUAN PER GRP	CODE	DESCRIPTION	NOTE	LINE
1,3	1	985D ~~985B~~	MTG PLT E/W SK A		1
2	1	985B	MTG PLT E/W SK A		
1,3	1	~~110A~~ 49A	~~COVER~~ BRKT SK ~~C~~ D		
	1	221KB	REL POS 1 SK A		
	1	222CM	" 2		5
	1	221CP	" 3		
	1	222CN	" 4		
	1	221CR	" 5		
	1	222CP	" 6		
1	1	197S	SWITCH POS 8, E/W		10
2	1	197CN	" " " "		
3	1	198DY	" " " "		
	2	M1R	CORD 7 1/2" LONG		
	2	M1R	" 9" "		
	3	M1R	" 11 1/4" "		15
	1	242A	PLUG POS 9 REAR		
1,3	1	~~182A~~ 178A	NETWORK SK B OR C		
~~1~~	~~1~~	~~147B~~	~~COND SK B~~		
~~1~~	~~1~~	~~81B~~	~~RES~~		20
~~1~~	~~1~~	~~LC-724-033~~	~~G2 LOCAL CABLE~~		
~~1~~	~~1~~	~~LC-724-033~~	~~G3 LOCAL CABLE~~		
~~3~~	~~1~~	~~LC-724-033~~	~~G1 LOCAL CABLE~~		
2	1	147B	CAP SK B		
2	1	81B	RES		25

GRP	QUAN PER GRP	EQUIPMENT	NO	CKT & FIG EQPD
	3	ASSEMBLY, EQUIPMENT & WIRING FOR ONE LINE FINDER OR TRUNK FINDER ARRANGED TO DISCRIMINATE BETWEEN TWO DIFFERENT CLASSES OF SERVICE (SEE NOTE 55,56 & 58)	1	ED-31530-30 FIG 1 WITH "H","P","Q", "T","W" WIRING AND "Q","P","V" APP ~~(SEE NOTE 6)~~
MFR DISC	2	ASSEMBLY, EQUIPMENT & WIRING FOR ONE LINE FINDER OR TRUNK FINDER ARRANGED TO DISCRIMINATE BETWEEN TWO DIFFERENT CLASSES OF SERVICE (SEE NOTE 56)	1	ED-31530-30 FIG 1 WITH "Q","Q","X", "Z" WRG AND "Q", "Q","Z" APP
	1	ASSEMBLY, EQUIPMENT & WIRING FOR ONE LINE FINDER OR TRUNK FINDER NOT ARRANGED TO DISCRIMINATE BETWEEN DIFFERENT CLASSES OF SERVICE (SEE NOTE 54)	1	ED-31530-30 FIG 1 WITH "Y","B","P" APP AND "B", "P" WRG

TABLE A

LINE	NAME	SCHEMATIC	DWG NO	FIG	OPT WIRING	WIRED	NOTES	REMARKS
2								
1	LINE FINDER	SD-31530-01	ED-31530-30	AS SPEC'D IN TABLE "A"				
	CIRCUITS							

SURFACE WIRING PROVIDED

NAME	NUMBER		NAME	NUMBER
APP TERM INFORMATION DWG	T-616850			
SURFACE WIRING RUNNING LIST	SWED-31530-30	=	MIR CORDS-DRESSING & ATTACHING	ED-30278-01

DWGS DESIG = WILL NOT BE REQ'D BY INSTALLER

LIST OF ASSOCIATED DWGS

DT	S	H22	J28	K29		
ORIGINAL ISSUE 10-4-34						
DWG. REPRODUCED DUE TO POOR CONDITION OF OLD TRACING. SD-C ROSS REF TABLE "A" ADED 10-9-40 OPTIONS WERE NOT DESIG. ENGINEERING NOTES WERE REVISED TO CLARIFY INFORMATION. NOTE 51 CHGD. 8-10-45 CL:D						17
TABLE A HEADING ADDED TO TABLE B. 9-27-45 CL:D						18
NOTE 7 CHGD TO INCLUDE REF TO ADJUSTMENTS A TO K OF TABLE B. 10-23-45 CL:E1						18
REPLACING WIRE COLORS WERE ADDED ON LEADS PASSING THRU MTG PLATE IN SL. LINES 21 TO 25 ADDED 10-22-47 CL:B (FUT)						
IN TITLE REF TO "355 & 360" & IN NOTE 51 REF TO BSP'S ADDED 12-22-47 CL:D						20
NOTE 7 READ "N PS SHALL BE ADJUSTED, W/ N SPECD TO MAKE CONTACT ON LEVELS AS SPECD IN ACCOLD WITH ADJ A TO K OF TABL "X B". 4-19-48 CL:B (FUT)						21
IN TITLE LINES 2 & 5 "360A" ADDED. LINE 4 READ "200 POINT LINE FINDER OR TRK FINDER" LINE 6 "3 WIRE" ADDED & LINE 7 "NO. 1 & 350A" ADDED. CKT ABBR READ (L FDR). DWG RATING "4 & M ONLY FOR 360A" ADDED. IN TABLE A GRP 3 REF TO NOTE 58 ADDED & "Y" OR "Q OR H WRG" READ "T" OR "W WRG". IN NOTE 6 "H" WRG ADDED. NOTE 10. NOTES 55 (D) & (E) & NOTE 58 ADDED. NOTE 54 (B) "OR WITHOUT E/C" ADDED. NOTE 51 (A) "AND ARRANGED FOR CLASS SVC" ADDED. IN SL. LINES 21, 22 & 23 LINED OUT. 11-25-49 CL:B (FUT)						22
IN SL. FIG 1 & SKC 182A NETWK LINED OUT & 178A NETWK ADD 5-26-50 CL:B (FUT)						23
LINES 2 & 4 & 25 ADDED & REF TO GRP 2 REMOVED FROM LINES 1, 10 & 20. 7-3-51 CL:B (FUT)						24
IN NOTE 10, LC-724-033 G1 & G2 READ LC 724-033 G1 & G3 & SHOP DESIG ADDED 1-2-51 CL:B (FUT)						25
IN NOTE 55 (A),(B),(C),(D),(E) REF TO "W", "P", "W", "H" & "W" WRG RESP. REMOVED NOTES 6 & 58 LINED OUT 3-8-52 CL:D						26
IN FIG. 1 USE OF 24G WIRE DISCONTINUED & REPLACED BY 24BG WIRE. COLORS CHGD ACCORDINGLY. LEAD BETWEEN TERM 11 OF PLUG TO 6 OF (A) REL AND ASSOC NOTE 11 A & B ADDED. NOTE 10 LINED OUT 6-10-53 CL:B						27
IN SL. LINE 3 REF TO "110A COVER" LINED OUT & "49A BRKT" ADDED & SKC LINED OUT & SK D ADDED. SKC RATING WAS STANDARD SK D ADDED 11-12-56 CL:DD						28
RATING OF DWG WAS "STANDARD" A & M ONLY FOR 360A. REPLACEMENT NOTE ADDED. 3-14-58 NDD-32007-2 CL:DD						29
REPRODUCED FROM WORN TRACING (3-18-63) NO CHANGE IN ISSUE.						29

29

REPLACED DUE TO SD-31530-01 BEING REPLACED BY SD-33013-01

ED-31530-30

STEP BY STEP SYSTEMS
NO 1, 350A, 355A OR 360A
EQUIPMENT AND WIRING
3 WIRE-200 POINT LINE FINDER
IN NO 1, 350A OR 360A
3 WIRE-200 POINT TRUNK FINDER
IN NO 1, 350A OR 355A
SURFACE WIRED

(LF) OR (TRK FDR)

WESTERN ELECTRIC COMPANY, INC.

MFR DISC

R

ED-31530-30

PRINTED IN USA

ED-31530-30