ISSUE NOTES (CONTINUED)

GROUP 34CF ADDED PER CN03103.

ORIG ISS: 11/17/86 CHANGE CLASS: AC

DRAFT: PKK	ENGR: JJK	SUPV:	CERTIFIED: 11/19/90	ISSUE: 32

IN TBL'S F1,F2,F3,H1 THRU H6, FIG'S M6 & M7 ALL 982TT CONN REF TO RCV1,RCV2,XMT1 AND XMT2 CHG'D TO READ RA,RB,TA & TB. TEXT CHG IN ENG NOTE 51 FOR GROUPS 41C,41D,42A,42B,42C,42D. TBL A EQPT DESCRIPTION COL TEXT CORRECTIONS FOR GROUPS 7,34CE,34CF, 41C,41D,42A,42B,42C,42D. CONNECTING CABLE TBL, ITEM 10 THRU 44 (GR 4 & 4A) AND ITEMS 512 THRU 542 (GR 12 & 12A) CORRECTED CABLE CODE. ITEM 877 & 878 IN EQL "FROM" COL (GR 34CF) ADDITIONAL STAMPING PROVIDED. ITEM 1755 (GR 54A) "FROM" FR OR UNIT COL, TAC CHG'D TO READ TAU. ITEMS 2000 THRU 2247 (GR'S 85 THRU 86A) SHIELD 4 CHG'D TO READ SHIELD 3. ITEMS 2829 THRU 2870 (GR 131,132,133) "TO" COL FR OR UNIT COL CHG'D TO DSX AND (2048 KBIT/S EQPT) ADDED TO REMARKS COL. ITEM 5800 (GR 190) REMARKS COL CHG'D. SH B11, PART OF FIG B1 LINED OUT. FIG H1 ADDED ON SH B15. SH B16, FIG J, REF TO GR 35 CHG'D TO READ GR 35CE. SH B20, FIG J4, REF TO D4 WIRING CHG'D TO READ 26GA WIRING. SH'S B33 & B34, FIG'S N1 & N2 TEXT DESCRIPTION CHG'D.

ORIG ISS: 11/17/86 CHANGE CLASS: M

DRAFT: HZP	ENGR: WJV	SUPV:	CERTIFIED: 03/18/91	ISSUE: 33

GROUP 189 RATING OF NRTO REMOVED.

ORIG ISS: 11/17/86 CHANGE CLASS: B

DRAFT: REW	ENGR: WJV	SUPV:	CERTIFIED: 04/04/91	ISSUE: 34

ENG NOTE 51, TBL A & CONN CABLING TBL GROUPS 41C,41D,42A,42B, 42C & 42D CHGD TO INCLUDE INTERCABINET COMMUNICATION CIRCUIT CABLING WHEN LINE-UP CONTAINS A RECONFIGURED SMC CABINET. SH B21 SK.K1 & SH B22 SK.K2 REMOVED AND REPLACED BY NEW SH B22, SK.K INTERCABINET COMMUNICATION CIRCUIT CABLING.

ORIG ISS: 11/17/86 CHANGE CLASS: B

DRAFT: HZP	ENGR: FK	SUPV:	CERTIFIED: 05/01/91	ISSUE: 35

GROUPS 900 & 901 ADDED. (EVEN/ODD SWITCHES OF A LU3 TERMINATION ON DIFFERENT DF'S) SEE NEW FIG.A9. B SHEETS RENUMBERED.

ORIG ISS: 11/17/86 CHANGE CLASS: B

DRAFT: HZP	ENGR: WJV	SUPV:	CERTIFIED: 05/01/91	ISSUE: 36

ISSUE NOTES (CONTINUED)

GROUPS 330X-333X AND 345X,346X ADDED. NOTE 154 ADDED, NOTE 153 MODIFIED. IN SL ITEMS 625,640,650,700,1140,1171,1172,1190,1620, 1630,1690,1700,1740,1850,3220,3640,3650,3660,3670,3800 AND 3830 SYMBOL 'S' ADDED.

ORIG ISS: 11/17/86 CHANGE CLASS: B

DRAFT: PKK	ENGR: IDK	SUPV:	CERTIFIED: 02/19/90	ISSUE: 26

GROUP 86 WAS 'DA', DIRECTLY REPLC'D BY G86A PER COST EFFECTIVENESS.

ORIG ISS: 11/17/86 CHANGE CLASS: B

DRAFT: PKK	ENGR: IDK	SUPV:	CERTIFIED: 02/22/90	ISSUE: 27

GROUPS 46,46A,46B,46C AND NOTES 155 & 156 ADDED. NRTO RATING REMOVED FROM GROUPS 330X-333X & 345X,346X.

ORIG ISS: 11/17/86 CHANGE CLASS: B

DRAFT: PKK	ENGR: HDM	SUPV:	CERTIFIED: 03/19/90	ISSUE: 28

GROUP 80 RATED 'DA', REPLC'D DIRECTLY WITH GROUP 80F (COST EFFECTIVENESS GROUP).

ORIG ISS: 11/17/86 CHANGE CLASS: B

DRAFT: PKK	ENGR: IDK	SUPV:	CERTIFIED: 06/01/90	ISSUE: 29

NEW GROUPS 12 THRU 12H ADDED. THESE GROUPS ORDER FIBER OPTIC LIGHT GUIDE CABLES FOR NEW 982TRA & 982TRS CONNECTORS. SL ITEMS 242 THRU 281 ADDED. ALL TBL'S FIG'S CHANGE TO SHOW NEW 982TRA & 982TSA CONNECTORS.

ORIG ISS: 11/17/86 CHANGE CLASS: B

DRAFT: PKK	ENGR: WJV	SUPV:	CERTIFIED: 08/30/90	ISSUE: 30

ENG. NOTE 153 REVISED PER CN03102. ISS NOTE RE: SHEET INDEX CHG TO REFLECT CORRECT ISS 30 ON THE FOLLOWING SHEETS: B29,B30,B31, B38,B39 & B40.

ORIG ISS: 11/17/86 CHANGE CLASS: AU

DRAFT: PKK	ENGR: JJK	SUPV:	CERTIFIED: 09/11/90	ISSUE: 31

ISSUE NOTES

GROUP 129F ADDED.

ORIG ISS: 11/17/86 CHANGE CLASS: A

DRAFT: DSL	ENGR: IDK	SUPV:	CERTIFIED: 08/24/88	ISSUE: 19

GROUP 88 & 89 AND NOTE 100 ADDED. SYMBOL 'S' ADDED TO SL ITEM 2255 & 2256 (G87). 'NRTO' RMVD FROM G121 & 121B. SL ITEM 32 & 34 RMVD.

ORIG ISS: 11/17/86 CHANGE CLASS: B

DRAFT: DSL	ENGR: IDK	SUPV:	CERTIFIED: 10/14/88	ISSUE: 20

'NRTO' RATING RMVD FROM GROUPS 8B,8C,8D & 8E.

ORIG ISS: 11/17/86 CHANGE CLASS: B

DRAFT: DSL	ENGR: IDK	SUPV:	CERTIFIED: 11/28/88	ISSUE: 21

NOTE 151 & 152 ADDED. SYMBOL 'S' REMOVED FROM SL ITEMS 2256 & 2261, IN ITEM 2261 QTY WAS CHG'D FROM '2' TO 'A/R'. IN TBL DC 'EADAS' ASSGNT WAS CHANGED FROM IOP1 COMM 0 SLOT 3 TO IOP0 COMM 2 SLOT 3. IN GROUP 87,88,34 AND 34A TBL 'A' MODIFIED. IN GROUP 137 TABLE 'A' REF TO 'ORM' ADDED. GROUP 29,29A (20816L1A INV) RATED 'DA'.

ORIG ISS: 11/17/86 CHANGE CLASS: B

DRAFT: DSL	ENGR: IDK	SUPV:	CERTIFIED: 01/10/89	ISSUE: 22

GROUPS 4C,22,22B,104A,104B,105A,105B ADDED. GROUP 34 AND 35 RATED DA AND WAS DIRECTLY REPLC'D BY G34CE & 35CE (COST EFFECTIVENES GROUP) TBL A1 (DF BLKS), A2 (FO ODL40-ODL50 CONVERSION TBL) AND TBL Z (FIGURE INDEX) ADDED. IN CABLING TABLE ODL50 CABLE CODE CHANGED FROM 1860A TO SHOW COMP ID. FO CABLES UPDATED FOR 2ND MCTU2 IN SMC. FIG.M6 & M7 (ODL50) ADDED. REF TO DF BLKS ADDED THROUG DOC. AUD PNL AND EXIT PILOT LAMPS UPDATED TO SHOW '( )'. GROUPS 28,28A,34 TBL A MODIFIED. NOTE 60 ADDED TO SL ITEM 2255, 2260.

ORIG ISS: 11/17/86 CHANGE CLASS: B

DRAFT: DSL	ENGR: IDK	SUPV:	CERTIFIED: 05/05/89	ISSUE: 23

IN SL ITEM 6080 WAS CHANGED FROM ED5D503-30G7 TO READ ED5D586-30G7.

ORIG ISS: 11/17/86 CHANGE CLASS: M

DRAFT: DSL	ENGR: IDK	SUPV:	CERTIFIED: 07/14/89	ISSUE: 24

GROUP 189 (NRTO) ASU2 ADDED. GROUP 87 RATED 'DA' AND WAS DIRECTLY REPLC'D BY G87A (8.3MIC) AND 87B (50MIC) TO ACCOMMODATE SOURCE AND EDIT MASTER REQUIREMENTS. NOTE 153 ADDED. IN TBL A2 REF TO 982FH WAS CHGD TO 1A TRCVR. IN GROUPS 87,87A AND 88 CONN TBL CA CODE WAS CHGD FROM 2000A TO READ LS1A-A.

ORIG ISS: 11/17/86 CHANGE CLASS: B

DRAFT: PKK	ENGR: IDK	SUPV:	CERTIFIED: 09/06/89	ISSUE: 25

SHEET INDEX

SHT NBR ISSUE	A1 THRU A144 ISSUE 117									
SHT NBR ISSUE	D1 THRU D91 ISSUE 117									
SHT NBR	B1	B2	B3	B4	B5	B6	B7	B8	B9	B10	B11
ISSUE	112	112	112	112	112	112	112	112	112	112	112
SHT NBR	B12	B13	B14	B15	B16	B17	B18	B19	B20	B21	B22
ISSUE	112	112	112	112	112	112	112	112	112	112	112
SHT NBR	B23	B24	B25	B26	B27	B28	B29	B30	B31	B32	B33
ISSUE	112	112	112	112	112	112	112	112	112	112	112
SHT NBR	B34	B35	B36	B37	B38	B39	B40	B41	B42	B43	B44
ISSUE	112	112	112	112	112	112	112	112	112	112	112
SHT NBR	B45	B46	B47	B48	B49	B50	B51	B52	B53	B54	B55
ISSUE	112	112	112	112	112	112	112	112	112	112	112
SHT NBR	B56	B57									
ISSUE	112	112									
SHT NBR											
ISSUE											
SHT NBR											
ISSUE											
SHT NBR											
ISSUE											
SHT NBR											
ISSUE											
SHT NBR											
ISSUE											
SHT NBR											
ISSUE											
SHT NBR											
ISSUE											

TABLE OF CONTENTS

DESCRIPTION	SHT
SHEET INDEX	A1
ISSUE NOTES	A1
ENGINEERING-NOTES	A7
TABLE A	A9
CONNECTORIZED CABLING	A38
B SECTION GRAPHICS	B1
MANUFACTURING NOTES	D1
STOCKLIST	D1
MISCELLANEOUS TABLES	D15

COPYRIGHT @ 2001 LUCENT TECHNOLOGIES
ALL RIGHTS RESERVED

BT13

INTERCABINET CABLING
FOR
5ESS * SWITCH
*LUCENT TRADEMARK

DWG SIZE C2 | ISSUE 117

LUCENT TECHNOLOGIES INC | ED5D500-21 | SHEET A1 OF 292

ED5D500-21

PRINTED IN U.S.A.

ISSUE NOTES (CONTINUED)

GROUP 13,ADDED TBL REF FOR SINGLE FAB(F4) AND DUAL FAB(F5) IN REMARKS COL.MODIFIED TABLES F4 AND F5 (ADDED REF TO EVEN AND ODD PORTS.CHANGED EQL REF TO SHOW ONLY ONE LOCATION FOR BKF1 CONN).FIG M8 CHANGED.CABLE IDENT JL110,JL111,JL112,JL113 FOR CM2 SIDE "1" CHANGED TO READ JL110A,JL111A,JL112A AND JL113A.

ORIG ISS: 11/17/86 CHANGE CLASS: ME

DRAFT: WJV	ENGR: WJV	SUPV:	CERTIFIED: 05/15/93	ISSUE: 53

GROUP 149(2.5MM COAX),GROUP 150 AND 151(TWISTED PAIR) ADDED FOR DLTU3. GROUP 133B(4MM COAX),133C(2.5MM),131A AND 132A(TWISTED PAIR) ADDED FOR DLTU-E(1 CKT).GROUPS 152,152A,153,153A,154,154A, (TWISTED PAIR),155(2.5MM COAX) AND 155A(4MM COAX) ADDED FOR DLTU-E(2 CKT).GROUP 146B AND 147B (1249A) ADDED FOR DLTU3 (30CH)

ORIG ISS: 11/17/86 CHANGE CLASS: B

DRAFT: WJV	ENGR: WJV	SUPV:	CERTIFIED: 06/08/93	ISSUE: 54

MISC CHANGES AND CORRECTIONS FOR ENGINEERING AND MANUFACTURING DOCUMENTATION AGREEMENT.PI 51.1,51.2,51.3,52.1,54.1,54.2. TBL A, GR146A,146,147A CORRECTED TO READ 24 CH.CONNECTORIZED CABLE TABLE GR20A & 20B,BAY STAMPING READS /BAY/. GR'S134B,134C, 147C & 147B CA CODE CHG'D TO READ 1249C.GR'S 34A,34CE,34CF FAN TERMINAL STAMPING CHG'D FROM J1,J4,J7,J8 TO READ 100,400,700 & 800. GR59, CA CODE CHG'D TO READ A25W. GR146B,CA CODE CHG'D TO READ 609C. GR'S44A,44B,44C & 200 CA CODE CHG'D TO READ TIW 2/24. GR 198 CABINET STAMPING CHG'D TO READ PCFD. GR'S 148,148A,149 AND 149A CHG'D NBR RECD COL FROM 1 TO READ ##,WITH A NOTE IN THE REMARKS COL (CHG DUE TO FCAB PROBLEMS). IN STOCKLIST ITEMS 3636, 3637,3638 & 3639 ADDED.ITEMS 1131,1132 & 3634 DELETED. ITEM 3573 QTY CHG'D TO READ 1. ITEM 3628,UNDER DESC. CHG ITEM 3600 TO READ 3631,ITEM 3629 UNDER DESC. CHG ITEM 3610 TO READ 3632. ITEM 1530 CHG IDENT 105398648 TO READ 105412498.ITEM 1540 CHG IDENT 105398648 TO READ 105412498.ITEM 1550 CHG IDENT 105414031 TO READ 105393888.ITEM 1560 CHG IDENT 105367775 TO READ 105412530. MISC TBLS F4 & F5(NCT LINKS) CA DESIG TO AGREE WITH FIG M8. TBL DC5 TYPING ERRORS CORRECTED.

ORIG ISS: 11/17/86 CHANGE CLASS: M

DRAFT: WJV	ENGR: WJV	SUPV:	CERTIFIED: 07/26/93	ISSUE: 55

TBL F2,CM2 PORTS '0' SIDE RB AND TB CHG'D TO READ RA AND TA.CM2 PORTS '1' SIDE RB AND TB CHG'D TO READ RA AND TA.TBL F3 CM2 PORTS '0' SIDE RA AND TA CHG'D TO READ RB AND TB.CM2 PORTS '1' SIDE RB AND TB CHG'D TO READ RA AND TA.FIG M7 (SHEET B33) CM2 '1' SIDE CORRECTED TO SHOW CHANGES MADE IN TBL'S F2 AND F3.SL ITEM 3576 PROD IDENT CHG'D TO READ ED5D503-32,G350B.

ORIG ISS: 11/17/86 CHANGE CLASS: ME

DRAFT: WJV	ENGR: WJV	SUPV:	CERTIFIED: 08/12/93	ISSUE: 56

TA GROUP 18B ADDED,CC SECT ITEMS 617 AND 619 ADDED,TBL BZ UPDATED AND TBL BZ1A ADDED FOR DLTU-E E/W ANN103 PACK.SL ITEMS3353,3353, 3552 AND 3553 CABLE CODE UPDATED.S.L ITEMS 25,30,40,50,60,70,80, 190,191,229,230,2256,2257,2262 AND 2265 "S" ADDED TO NOTE COL. MISC TBL F5 CABLE DESIG CHGD, S.L. ITEM 1840 AND 1855 IN CC SECT FROM SIDE,INFO ADDED TO FRAME OR UNIT COLUME.

ORIG ISS: 11/17/86 CHANGE CLASS: B

DRAFT: REW	ENGR: REW	SUPV:	CERTIFIED: 10/15/93	ISSUE: 57

GROUP 18B THE MANUF. GROUP CHGED.GROUP 148C AND 148D ADDED.SHT B48,B49&B50 REF TO MCTU3 CHGD TO TSIU4.TBL BZ,BZ1A AND CX1 CHGD.

ORIG ISS: 11/17/86 CHANGE CLASS: B

DRAFT: REW	ENGR: REW	SUPV:	CERTIFIED: 10/26/93	ISSUE: 58

ISSUE NOTES (CONTINUED)

GROUPS 41E,42E,42F,42G,42H,42J AND 137A ADDED FOR NEW COMMUNICATION CIRCUIT MULT FOR MODULAR FUSE/FILTER (J5D003FJ) PNL. SEE ENG NOTE 51, TBLA, CONNECTORIZED CABLING TBL, SL, NEW TABLES KA3 & KA4 AND SHEETS B22,B23,B24 FOR NEW GROUPS. SHEET B23 THRU B46 RENUMBERED FOR NEW INFO ON SH B23 & B24.

ORIG ISS: 11/17/86 CHANGE CLASS: B

DRAFT: PKK	ENGR: WJV	SUPV:	CERTIFIED: 09/04/92	ISSUE: 45

FIG'S M6/M7, 982TT CHGD TO AGREE WITH 555 HANDBOOK. GR 29B ADDED FOR 2ND INVERTER (WP-91652,L20,101) IN A MISC CAB. GR 133A ADDED FOR DLTU-E TERMINATING ON DSX REQUIRING 4MM CABLE.

ORIG ISS: 11/17/86 CHANGE CLASS: B

DRAFT: FK	ENGR: WJV	SUPV:	CERTIFIED: 10/07/92	ISSUE: 46

GROUPS 191A,192B,193A & 193B ADDED FOR ABS/RTN FOR RSM, MMRSM, ORM & TRM PWR, FOR USE WITH MFFU (J5D003FJ-1). ENG NOTE 157 ADDED. TA GRPS 191 & 192 REFERENCE TO GRP 190 CHGD TO 189 TO AGREE WITH VIRGOS.

ORIG ISS: 11/17/86 CHANGE CLASS: B

DRAFT: TFL	ENGR: TFL	SUPV:	CERTIFIED: 10/09/92	ISSUE: 47

GROUP 13 ADDED.OPTIC FIBER FROM TSIU4 TO CM2 (SM2000). TABLE A,GR133A,DESCRIPTION CHANGED. GROUPS 44A,44B,44C,194B,196A & 200A ADDED FOR MFFU (J5D003FJ-1) MISC CAB FUSE ALARMS.

ORIG ISS: 11/17/86 CHANGE CLASS: B

DRAFT: WJV	ENGR: WJV	SUPV:	CERTIFIED: 01/04/93	ISSUE: 48

RATING NRTO RMVD FROM GROUPS 44A,44B,44C,194B,196A AND 200A. GROUP 196 TBL A REFERENCE TO GRP 194B MODIFIED TO READ 194. GROUP 196A TBL A REFERENCE TO GRP 194 MODIFIED TO READ 194B. CABLE SECTION ITEMS 2817,2819,2820 AND 2821 MODIFIED TO READ 1249012C.

ORIG ISS: 11/17/86 CHANGE CLASS: B

DRAFT: TFL	ENGR: TFL	SUPV:	CERTIFIED: 01/15/93	ISSUE: 49

GROUPS 19,146,146A,147,147A & 148 ADDED FOR DLTU-3.

ORIG ISS: 11/17/86 CHANGE CLASS: B

DRAFT: REW	ENGR: REW	SUPV:	CERTIFIED: 03/22/93	ISSUE: 50

STAMPING INFO FOR NEW CSPC(3B21D) ADDED.GROUPS 20A,20B,31,34CF, 35CE,39C,39D,40,43,43A,43B,45,45A,60,61,63,64,65,66,71 AND 72 CHANGED TO TERMINATE ON EITHER 3B20D(PCCA 0/1) OR 3B21D(CSPC). GROUP 35CG ADDED. ASSY GROUPS ED5D505-30,105 AND 109 REMOVED FROM GROUP 35CE AND BECAME NEW GROUP 35CH.A SECOND SET OF DUPLICATED NCT2 LINKS ADDED TO GROUP 13.TBL A AND CONNECTORIZED CABLE SECTION CHANGED AND NEW FIG 8M ADDED.NEW TBL F5 ADDED FOR SINGLE FAB NCT2 LINKS.

ORIG ISS: 11/17/86 CHANGE CLASS: B

DRAFT: WJV	ENGR: WJV	SUPV:	CERTIFIED: 03/30/93	ISSUE: 51

GROUP 210 ADDED FOR OPTO-ISOLATOR ADDED TO F/F UNIT(1 CKT). CN34519NW

ORIG ISS: 11/17/86 CHANGE CLASS: A

DRAFT: REW	ENGR: REW	SUPV:	CERTIFIED: 05/11/93	ISSUE: 52

ISSUE NOTES (CONTINUED)

GROUP 199 REPLACED BY GROUP 200 FOR OPTO-ISOLATOR ADDED TO F/F UNIT. CN14045

ORIG ISS: 11/17/86 CHANGE CLASS: A

DRAFT: REW	ENGR: WJV	SUPV:	CERTIFIED: 08/14/91	ISSUE: 37

IN TBL A GR 189 IN DESC COL ED5D678-12 CHG'D TO -10. GR 191 IN DESC COL FIG N1 CHG'D TO N1 & N3. S/L ITEMS 7145 & 7146 CHG'D. TBL KA1 & KA2 INFO ADDED TO FOCUS/PDD. GROUPS 4,4A,4C,8B,8C,8D, 8E,10,10A RATING CHG'D TO DA.

ORIG ISS: 11/17/86 CHANGE CLASS: B

DRAFT: HZP	ENGR: REW	SUPV:	CERTIFIED: 08/20/91	ISSUE: 38

IN TA GROUPS 141A & 142A ADDED. MISC TBL CC1 ADDED. IN TBL CD GROUPS 37A & 38A ADDED.

ORIG ISS: 11/17/86 CHANGE CLASS: M

DRAFT: HZP	ENGR: HZP	SUPV:	CERTIFIED: 09/24/91	ISSUE: 39

TBL CC1 ADDED STAMPING INFO. SG 0 (J1,J3) EQL 118 CHG'D TO READ 030 AND SG 1 (J2,J4) EQL 030 CHG'D TO READ 118. SG 0 EQL POS 038 AND 046 ADDED. SG 1 EQL POS 126 AND 134 ADDED.

ORIG ISS: 11/17/86 CHANGE CLASS: B

DRAFT: HZP	ENGR: HZP	SUPV:	CERTIFIED: 10/02/91	ISSUE: 40

GROUP 45A ADDED TO PROVIDE SCAN POINTS 96 & 97 FOR PDF 6 & 7.

ORIG ISS: 11/17/86 CHANGE CLASS: AC

DRAFT: HZP	ENGR: FK	SUPV:	CERTIFIED: 02/19/92	ISSUE: 41

GR198A ADDED FOR MJ AND MN ALMS FROM PD TO MMRSM,ORM/TRM OR C/O.NEW GROUP 39E ADDED FOR AT&T SECURE DATA DEVICE.ITEM 1245 & SL ITEM 1175 ADDED.NEW GROUPS 138 & 139 ADDED FOR IDCU.ITEMS 2961 THRU 2968 AND SL ITEMS 3380 THRU 3415 ADDED.

ORIG ISS: 11/17/86 CHANGE CLASS: B

DRAFT: REW	ENGR: REW	SUPV:	CERTIFIED: 05/13/92	ISSUE: 42

REF TO 13A+ RA UNIT ADDED TO GROUPS 27 & 27A; FIG.A & A1.

ORIG ISS: 11/17/86 CHANGE CLASS: B

DRAFT: HZP	ENGR: WJV	SUPV:	CERTIFIED: 06/05/92	ISSUE: 43

IN CC SECTION ITEM 2963 GR IN REMARKS COL CHGD. ITEMS 3120 & 3130 CABLE CODE CHGD.GRS 138 AND 139 DA. INFORMATION FOR IDCU TRANSFERED TO ED5D621-11,ISS 34 GR 138 AND 139. GR 34CF,TBLA,DESCRIPTION CHANGED TO ADD (HOST E/W CM1). GRS 64,65,66,67A,68A & 71 CABLE CHGD FROM NCA3050 TO 1246004C IN CONNECTORIZED CABLING SECTION.

ORIG ISS: 11/17/86 CHANGE CLASS: MF

DRAFT: REW	ENGR: REW	SUPV:	CERTIFIED: 08/12/92	ISSUE: 44

COPYRIGHT @ 2001 LUCENT TECHNOLOGIES
ALL RIGHTS RESERVED

BT13

INTERCABINET CABLING
FOR
5ESS * SWITCH
*LUCENT TRADEMARK

DWG SIZE C2 | ISSUE 117

LUCENT TECHNOLOGIES INC | ED5D500-21 | SHEET A2 OF 292

PRINTED IN U.S.A.

ISSUE NOTES (CONTINUED)

GROUPS 450 AND 451 ADDED DFI2-EXTERNAL TIMING,GROUPS 452-455 SM2000 TSICOM(UN74B) TO BITS BOX ADDED.STOCKLIST ITEMS 3020'3025, AND 3027 GROUPS FOR ASSEMBLIES CHGD.

ORIG ISS: 11/17/86 CHANGE CLASS: B

DRAFT: REW	ENGR: REW	SUPV:	CERTIFIED: 05/08/95	ISSUE: 74

IN CABLE SECTION, ITEM 8410, CORRECTED CABLE CODE; ITEM 8420, CORRECTED CABLE IDENT.; IN TABLE A, REMOVED "NRTO" FROM GR 370; FOR DNU-S: IN TABLE A, ADDED NEW GROUP 371; ADDED SECTION CODE ITEMS 8220 & 8230; ADDED STOCKLIST ITEMS 7380 & 7385; ADDED MISC. TABLE J3.

ORIG ISS: 11/17/86 NDD NBR: 5D003NW-444 CHANGE CLASS: B

DRAFT: WJV	ENGR: WJV	SUPV:	CERTIFIED: 06/21/95	ISSUE: 75

982TT,982TTC AND BKF1 TRANSCEIVERS EQUIPPED IN PACK POSITIONS 032 THRU 088 FOR FIBER OPTIC TERMINATION ON CM2,PROVIDE SIGNALS ONLY TO THE UPPER PORTION OF CONNECTORS(PIN 145 & 113),BUT THE CORRECT STAMPINS OF TERMINAL NUMBERS FOR THESE 2 X 24 CONNECTORS S/B 132 AND 100. TABLES F1 THRU F5 AND H1 THRU H6 CHANGED TERMINALS 145 AND 113 TO READ 132 AND 100.FIG'S M2,M3,M4,M5,M6, M7 AND M8 ON SHEETS B25-B33,B48-B50 CHG'D TO TERM 132 & 100. TBL A,GR 346X,CHG'D CA TYPE 1249A TO READ 1249C.(OC PI 75.1)

ORIG ISS: 11/17/86 CHANGE CLASS: MF

DRAFT: WJV	ENGR: WJV	SUPV:	CERTIFIED: 10/04/95	ISSUE: 76

IN TABLE A, DESCRIPTION OF GROUPS 370 & 371 MODIFIED FOR CLARITY (ADDED MAX. LENGTH RESTRICTIONS); IN CONNECTORIZED CABLING, ITEMS 8230 & 8240, REMARKS ADDED; IN MISC. TABLES J2 & J3, EQL INFO ADDED; NRTO REMOVED FROM TABLE A, GROUP 14; MODIFIED TABLE BX-5.

ORIG ISS: 11/17/86 CHANGE CLASS: ME

DRAFT: JVB	ENGR: JVB	SUPV:	CERTIFIED: 10/05/95	ISSUE: 77

MERGE PROBLEMS IN ISSUE 76 OF CIMANAGER MISSED SHEETS B25 THRU B33 AND B48,B49,B50.THIS ISSUE PICKS UP THE MISSING SHEETS. GR 189 AND 191A,ADDED RISLU TO TBL A DESCRIPTION AND CA SECTION ITEMS 5750 AND 5805.ADDED STAMPING INFO TO ITEM 1880.CHANGED TBL A DESCRIPTION AND ADDED INFO TO TBL K4 FOR DNU-S LOCATED OUTSIDE THE 5E FOOTPRINT FOR GR 42J.

ORIG ISS: 11/17/86 CHANGE CLASS: M

DRAFT: WJV	ENGR: WJV	SUPV:	CERTIFIED: 10/18/95	ISSUE: 78

IN TABLE A , NOTE 51 AND CONNECTORIZED CALING TABLE GROUP 405 ADDED. IN STOCKLIST ITEM 7910 ADDED. IN STOCKLIST ITEM 7375 G1A READ G2, ITEM 7385 G2A READ G2, ITEMS 7401 & 7451 ADDED. IN CONNECTORIZED CABLING TABLE: ITEMS 8251 & 8256 ADDED; ITEMS 8250 & 8255 NBR REQD READ 2 AND EQL ()19-156 READ ()-156; IN ITEMS 1225, 1239, 1240, 1243, 1244, 1245, 1250, 1360, 1370, 1860, 1861, 1865, 1866, 1870 & 1880 REF TO "DSC" RMVD TO FRAME OR UNIT COL; IN ITEMS 1890 & 1990 REF TO "DS" RMVD FROM TO FRAME OR UNIT COL.

ORIG ISS: 11/17/86 CHANGE CLASS: M

DRAFT: DLP	ENGR: DLP	SUPV:	CERTIFIED: 01/18/96	ISSUE: 79

ISSUE NOTES (CONTINUED)

GROUP 28D ADDED FOR 16A RECORED ANNOUNCEMENT. ENG NOTE 159 ADDED.

ORIG ISS: 11/17/86 CHANGE CLASS: B

DRAFT: REW	ENGR: REW	SUPV:	CERTIFIED: 08/08/94	ISSUE: 66

STOCKLIST ITEMS 7380 AND 7385 REINSTATED TO DRAWING. GROUP 31, ADDED STAMPING INFO FOR CM2C/CDX (ESM APPLICATION). GROUPS 104,104A,104B,105,105A,105B CHG'D STAMPING INFO AND CABLE ASSEMBLY GROUP NUMBERS.SL ITEMS 3020,3025 & 3027 CHG'D. CHANGED CABLE ASSEMBLY GROUP NUNBERS FOR THE FOLLOWING LU3 GROUPS 183 THRU 186,183A THRU 186A,183B THRU 186B,183D THRU 186D,183E THRU 186E,204 THRU 207,204B THRU 207B,214A THRU 217A AND 214B THRU 217B.SL ITEMS 4200,4230,4240,4250,4280,4290,43004310,4320, 4330,4340,4350,4380,4390,4400,4430,4440,6240,6270,6280,6290,6300, 6310,6320,6340,6580,6585,6595,6605,6610,6615,6620,6625,6630,6635, 6645,6655,6665,6670,6675 CHG'D

ORIG ISS: 11/17/86 CHANGE CLASS: MF

DRAFT: WJV	ENGR: WJV	SUPV:	CERTIFIED: 08/25/94	ISSUE: 67

GROUPS 146C,D,E GROUPS 400,401,402,403 AND 404 ADDED FOR COMBINE SERVICE UNIT GROUPS 148,149 104,A,B AND 106 REVISED FOR THE ADDITION OF CSU INFO.GROUPS 380 AND 381 ADDED FOR AUTO POWER RECOVERY FEATURE(TN1077F).

ORIG ISS: 11/17/86 CHANGE CLASS: B

DRAFT: REW	ENGR: REW	SUPV:	CERTIFIED: 11/15/94	ISSUE: 68

GR 28E ADDED FOR BULK CABLE REQUIRED FOR 16A ANNOUNCEMENT UNIT (REMOVED FROM GR28D).CONN CA SEC,ITEM 818 REMOVED AND 825 ADDED. SL ITEMS 669 AND 670 CHG'D TO READ G28E.REF FOR NEW GPDF(J86334E) CAB ADDED TO GROUPS 24,198,198A.SEE FIG'S J,N1,N2 AND CONN CA SEC ITEMS 770,5890,5892.GROUPS 105,105A,105B,REMARKS COL CORRECTED REF TO GR NUMBERS.

ORIG ISS: 11/17/86 CHANGE CLASS: M

DRAFT: WJV	ENGR: WJV	SUPV:	CERTIFIED: 12/27/94	ISSUE: 69

TABLES KA1,KA2,KA3 & KA4, CHG'D FIXED CABINET BAY NUMBER TO ( ) FOR EITHER CLASSIC OR SM2000 STAMPING.

ORIG ISS: 11/17/86 CHANGE CLASS: M

DRAFT: WJV	ENGR: WJV	SUPV:	CERTIFIED: 01/17/95	ISSUE: 70

GROUPS 225,225A,226,226A,227 AND 227A(RATED LA) ADDED NEW LU4 FOR DENVER SULLIVAN AND WESTMINSTER,CO OFFICES.SEE TBL A,SL ITEMS 3672,3682,6720 THRU 6755,CA SEC ITEMS 4082,4092,6600 THRU 6616, FIG. A3 AND ALL ASSOCIATED MISC TABLES AND ENG NOTES.GROUPS 380 AND 381 CHG'D NBR RECD TO READ 2.

ORIG ISS: 11/17/86 CHANGE CLASS: B

DRAFT: WJV	ENGR: WJV	SUPV:	CERTIFIED: 02/02/95	ISSUE: 71

IN CC SECTION GROUPS 153,153A,154 AND 154A TERMINAL CHANGED FROM 122 TP 106. GROUPS 87A,87B,88 AND 89 WORDING IN TABLE A REVISED.IN CC SECTION ITEM 1360 AND 1375 UNDER EQL COLUMN SEE TBL DC5 CHANGED TO DC6.ITEM 1375 UNDER REMARKS COLUMN MAX CABLE LENGTH 50' ADDED.TABLES MA THRU MA5 ADDED. OC POINT CHANGES 67.1 AND 68.1 INCORPORATED.

ORIG ISS: 11/17/86 CHANGE CLASS: MF

DRAFT: REW	ENGR: REW	SUPV:	CERTIFIED: 03/17/95	ISSUE: 72

LU4 GROUPS 160A,161A,225,225A,226,226A,227 AND 227A RATED DA. ALL LU4 INFO REMOVED FROM CONNECTORIZED CABLE SECTION,STOCKLIST AND MISC. TABLES

ORIG ISS: 11/17/86 CHANGE CLASS: B

DRAFT: WJV	ENGR: WJV	SUPV:	CERTIFIED: 03/24/95	ISSUE: 73

ISSUE NOTES (CONTINUED)

'NRTO' REMOVED FROM GR 148D.SL ITEMS 3579 THRU 3590 RENUMBERED 3600 THRU 3611.ITEMS 3578 THRU 3586 ADDED.REF TO AUD/VIS ALM UNIT (NE00312-31,G1) ADDED TO ALL GROUPS AND FIG'S USING THE AUD ALM PNL.GR'S 30 & 31,REF TO 'DTDA' REMOVED.GR 30,REMARKS COL EQL STAMPING 019-054-154 AND 045-054-154 CHG'D TO READ 019-154-154 AND 045-154-154.

ORIG ISS: 11/17/86 CHANGE CLASS: ME

DRAFT: WJV	ENGR: WJV	SUPV:	CERTIFIED: 01/05/94	ISSUE: 59

GROUPS 28B AND 28C ADDED FOR 15A REC ANNOC. STOCKLIST ITEMS 3604 AND 3605 ITEM NO. IN DESCRIPTION COL CHGD.

ORIG ISS: 11/17/86 CHANGE CLASS: B

DRAFT: REW	ENGR: REW	SUPV:	CERTIFIED: 02/22/94	ISSUE: 60

NEW GROUPS 36D AND 36E ADDED FOR DEAD SYSTEM ALARM CABLES REQUIRED FOR 3B20D (36D) AND 3B21D (36E). STOCKLIST ITEMS 3081 THRU 3086 ADDED. FIG. J, SHEET B17 UPDATED. MISC TABLE DC5, JV234 & JV235, 3B21 TERMINAL NO. CHANGED.

ORIG ISS: 11/17/86 CHANGE CLASS: B

DRAFT: JVB	ENGR: WJV	SUPV:	CERTIFIED: 04/07/94	ISSUE: 61

FIGS. J1,J2 AND J4 REVISED FOR AUDIBLE ALARM PANEL AND AUDIBLE VISUAL ALARM CONNECTIONS. MISC STAMPING CHANGES AND CORRECTIONS MADE ON THE FOLLOWING GROUPS: 20B,34CF,37,38,39,39E,40,41C,41D,41E,42A,42B,42C,42D,42E, 42F,42G,42H,42J,43,43A,43B,66,67,67A,68,68A,69,70,137,137A,139, 154A,193. SEE THE FOLLOWING CONNECTORIZED CABLING SECTIO ITEMS: 660,877,878,1225,1230,1240,1241,1242,1243,1244,1245,1250,1280, 1290,1295,1310,1320,1330,1340,1342,1344,1348,1350,1360,1370,1394, 1855,1860,1861,1865,1866,1870,1880,2955,2956,2967,3609 & 5840.

ORIG ISS: 11/17/86 CHANGE CLASS: B

DRAFT: REW	ENGR: REW	SUPV:	CERTIFIED: 05/18/94	ISSUE: 62

GROUPS 350,351,352 AND 353 ADDED FOR TN4011 PACK FOR DLTU2 AND DLTU3 FOR NTT.

ORIG ISS: 11/17/86 CHANGE CLASS: B

DRAFT: REW	ENGR: REW	SUPV:	CERTIFIED: 05/20/94	ISSUE: 63

GROUPS 350,351,352 AND 353 CHANGED AND GROUPS 350A,351A,353A,354 354A AND 355 ADDED FOR DLTU2 AND DLTU3 FOR THE TN4011 PACK FOR NTT.

ORIG ISS: 11/17/86 CHANGE CLASS: B

DRAFT: REW	ENGR: REW	SUPV:	CERTIFIED: 05/25/94	ISSUE: 64

TBL DC5,JV73A & JV89A CONN POS 5,EQL 019-102-553 & 045-102-553 CHGD TO READ 019-102-535 & 045-102-535.GROUPS 14,370 AND 372 ADDED TABLES BX-5 AND J2 ADDED FOR DNU-S.

ORIG ISS: 11/17/86 NDD NBR: O CHANGE CLASS: B

DRAFT: REW	ENGR: REW	SUPV:	CERTIFIED: 06/20/94	ISSUE: 65

COPYRIGHT @ 2001 LUCENT TECHNOLOGIES
ALL RIGHTS RESERVED

BT13

INTERCABINET CABLING
FOR
5ESS * SWITCH
*LUCENT TRADEMARK

DWG SIZE C2 | ISSUE 117

PRINTED IN U.S.A.

ISSUE NOTES (CONTINUED)

(H7980)GROUP 148E ADDED FOR DLTU3 TERMINATING WITH BNC CONNECTORS ON A DSX FRAME.ENG NOTE 51 MODIFIED,TABLE A UPDATED,CA SEC ITEM 3570 CHG'D TO 3561,ITEMS 3565 AND 3566 ADDED.STOCKLIST ITEM 3570 MODIFIED,ITEMS 3588 AND 3589 ADDED.MISC TABLE CX1 UPDATED.

ORIG ISS: 11/17/86 NDD NBR: NDD5D500NW-24 CHANGE CLASS: B

DRAFT: WJV	ENGR: WJV	SUPV:	CERTIFIED: 12/11/96	ISSUE: 87

(H8070)GROUPS 160 AND 161 RATED 'DA'AND REPLACED WITH NEW GROUP 162.TBL A,ENG NOTE 51 & MISC TABLES BP,CC & CD UPDATED.CABLE SEC ITEM 4092 AND STOCKLIST ITEM 3684 ADDED.STOCKLIST ITEMS 666, 667 AND 668 REMOVED 'S' FROM SYM COL.(OC PI87.1) ALL B SHEETS,CHANGED AT&T TO READ LUCENT TECHNOLOGIES INC.

ORIG ISS: 11/17/86 NDD NBR: NDD5D500NW-28 CHANGE CLASS: B

DRAFT: WJV	ENGR: WJV	SUPV:	CERTIFIED: 02/12/97	ISSUE: 88

THIS ISSUE INCLUDES H8018 AND H7912.
(H7912)TABLE A AND ENG NOTE 51 ADDED GROUP38B.NOTE 162 ADDED. CABLE SEC ITEM 1233 ADDED AND STOCKLIST ITEM 1163 ADDED.
(H8018)GROUPS 141,142,175,175A,176,176A,177 AND 177A RATED 'DA'. CABLE SEC,GROUP 28C ITEM 817 "TO FRAME" CHG'D TO READ DF.GROUP 31 ITEMS 860 AND 861 REMOVED BAY 0 & 1 STAMPING FROM "FROM FRAME". GROUPS 34A AND 34CF,TABLE A AND CA SEC ITEMS 875,877 AND 878 ADDED, OR DSC( ) FAN UNIT TO "FROM FRAME".GROUP 35B,ITEM 1160 CHG'D "TO FRAME" ( ) TO READ / / & ITEM 1170 ADDED (NO STAMPING REQUIRED) TO THE REMARKS COL AND "TO FRAME" ( ) TO READ / / PLUS ADDED / / TO EQLS.GROUP 38A ITEMS 1231 & 1232,"FROM FRAME" ADDED / / TO PRCO 0 & 1.GROUPS 39F,43C,43D,63A,66A,72C ITEMS 1246,1371,1376,1841,1856 AND 1921 CHG'D "FROM FRAME" TO READ CSPC GROUP 42J,ITEM 1350 ADDED OR SM2K,LTP ( ) TO BOTH "FROM & TO FRAME".GROUP 43B,ITEM 1375 CHG'D "TO FRAME"/MODEM/ TO READ DFA( ) OR DSC( ) OR M( ).GROUPS 80A,80B,80C,80D,80E & 80F,ITEMS 2080 THRU 2196,"FROM FRAME" CHG'D LTP 0 RCU TO READ LTP / / OR SMC / / RCU AND EQL 045 TO READ ( )45.GROUPS 191 & 191A,ITEMS 5805 & 5810 "FROM FRAME" ADDED / / TO EQL'S.MISC TABLE 'BY' CHG'D EQL 045 TO READ ( )45.MIST TABLE 'STA' ADDED REF NOTE FOR LINE ENGINEERING. TABLE A GR42J AND MISC TBL 'KA4' UPDATED FOR SM2K,LTP ( ) AND RING NODE.

ORIG ISS: 11/17/86 NDD NBR: NDD5D500NW-25 CHANGE CLASS: ME

DRAFT: WJV	ENGR: WJV	SUPV:	CERTIFIED: 03/26/97	ISSUE: 89

TABLE A CHANGES: THE RATING FOR GROUPS 44A,44B,44C WAS STANDARD, GROUPS 44D,44E,44F ADDED.
NDD CASE NO. H8061

ORIG ISS: 11/17/86 NDD NBR: NDD5D500NW-26 CHANGE CLASS: ME

DRAFT: EDH	ENGR: EDH	SUPV:	CERTIFIED: 03/28/97	ISSUE: 90

(H7933) MODIFIED CONNECTORIZED CABLE SECTION FOR GROUPS 129,129A, 129B,131A,132A,152,152A,153,153A,154,154A,160,161,183,184,185, 186,183A,184A,185A,186A,183B,184B,185B,186B,183D,184D,185D,186D, 183E,184E,185E,186E,204,205,206,207,204B,205B,206B,207B,214A, 215A,216A,217A,214B,215B,216B,217B,900,901,350,351,352,350A,351A, 353,354,355,353A AND 354A FOR AN SMC CABINET EQUIPPED WITH MCTU3 IN POSITION 28 AND THE BI-DIRECTIONAL FAN IS IN POS 36, FOR CABLES ADDING PERIPHERAL UNITS IN POSITIONS 11 AND 19.

ORIG ISS: 11/17/86 CHANGE CLASS: B

DRAFT: PKK	ENGR: WJV	SUPV:	CERTIFIED: 05/13/97	ISSUE: 91

(H8067)BSPEC CORRECTIONS.
ENG NOTE 51 UPDATED.TABLE A,GROUPS 42E,42F,42G,42H,CABLE SECTION ITEMS 1342,1344,1346,1348 AND TABLE KA4 UPDATED FOR SM2K LTP( ). CABLE SECTION ITEM 3581 REMARKS COL CHG'D REF TO ED5D503-30 TO READ ED5D503-32,ITEMS 1220 AND 1221 'TO FRAME',CHG'D EQL 019-153 AND 045-153 TO READ 019-145 AND 045-145.ITEMS 8350,8360, 8370,8380,8390,8400,8410,8420,8430,8450,8460 CHG'D 'FROM FRAME' EQL'S 062,053 AND 045 TO READ ( )62,( )53 AND ( )45.

ORIG ISS: 11/17/86 NDD NBR: NDD5D500NW-27 CHANGE CLASS: ME

DRAFT: WJV	ENGR: WJV	SUPV:	CERTIFIED: 07/02/97	ISSUE: 92

ISSUE NOTES (CONTINUED)

NDD5D500NW-16
IN TABLE A & NOTE 51 GR 15 ADDED. IN CABLE SECTION GR'S 18A, 18B, & 19 ITEMS 616 THRU 620 & 624 CHG'D TO READ 664 THRU 668 & 669 RESP. GR'S 20A & 20B ITEMS 627 THRU 630,640,650,660 & 670 CHG'D TO READ 682 THRU 685,686,687 & 689 RESP. ITEMS 620 THRU 627 ADDED. IN STOCKLIST ITEMS 287 & 288 ADDED. IN ITEMS 289 THRU 370 ITEM NUMBERS CHG'D TO AGREE WITH CABLE SECTION. FIG. M10 SHEETS B52 THRU B54 ADDED. CABLE SECTION ITEMS 1220 & 1221 IN TO EQL COL "045-145-045" CHG'D TO READ "045-153-045".
NDD5D500NW-17
IN TABLE A GR'S 41E & 42J ADDED. IN CABLE SECTION ITEMS 1295 & 1350 REF TO RING NODE ADDED. ENG NOTE 51 CHG'D ACCORDINGLY. IN CABLING SECTION ITEMS 90-248,491-508,583-627,1700,1710,2196,2200, 2220,2235,2237,2240,2246,2250-2275,2280-2283,2400-2710,2800-2830, 2840,2850,2860-3598,3620-3646,7000-7070 & 8250-8345 "SMC1" CHG'D TO "SMC//". ITEMS 1280-1342,5750-5820 & 5835-5846 "SMC1" CHG'D TO "SMC( )". SHEET B22 SK. K RING NODE ADDED. IN TABLE KA3 & KA4 . RING NODE ADDED. IN TABLE A GROUPS 126 & 127 RATED DA. IN CABLE SECTION ITEMS 1180,1185,1190,1191,1855 & 1890 REF TO "OR ECPC OR OMP" ADDED.
NDD5D500NW-20
IN CABLE SECTION ITEMS 868-878 EQL "011-" CHG'D TO "( )-". ITEMS 2200,2220,2235 & 2237 "TBL CJ1" CHG'D TO "TBL CJ1 CJ2". ITEMS 2240 & 2246 "TBL CK1" CHG'D TO "TBL "CK1 CK2". MISC TABLES BA, BA1,BA2,BA3,BA4,BB,BB1,BB2,BB3,BC,BC1,BC2,BH,BN1,BO1,BO2,BP,BP1, BS,BZ1,BZ1A,BZ2,CJ1,CK1,CL1,CX,CX1,CX1A,CX2 & DA POS 0 VERT 11 ADDED. MISC TABLES CJ2 & CK2 ADDED. TABLE BO REMOVED.

ORIG ISS: 11/17/86 NDD NBR: 5D500NW16,17,20 CHANGE CLASS: NEW

DRAFT: DLP	ENGR: WJV	SUPV:	CERTIFIED: 06/27/96	ISSUE: 83

SHEET INDEX CORRECTED TO SHOW CORRECT ISSUE FOR SHEET B23.

ORIG ISS: 11/17/86 CHANGE CLASS: ME

DRAFT: DLP	ENGR: WJV	SUPV:	CERTIFIED: 06/28/96	ISSUE: 84

(H7574)INFO ADDED TO GR 13 & 14 FOR TSIU4-2.ENG NOTE 51 MODIFIED. TABLE A,ADDED TSIU4-2(J5D003BN-2) TO GR'S 13,14,450,451,452, 453,454 AND 455.CABLE SECTION ADDED REF TO TSIU4-2 AND NEW PORT ASSIGNMENT TABLES N4 AND N5.NEW MISC TABLES N4 AND N5 ADDED FOR TSIU4-2(EBN-2).
(H7809)GROUP86A,TBL A,CA SEC ITEMS 2246 & 2247 CHANGED CABLE CODE 734A TO 734D.GROUPS 35A,56A,191,191A,192,192A,192B,193,193A,193B, 194A,195,196,196A DO NOT REQUIRE STAMPING,CHANGED ( ) TO READ / / IN CABLE SEC ITEMS 1150,1780,5805,5810,5820,5830,5835,5840,5843, 5846,5860,5870,5880,5885.GROUPS 198,198A,200A,210 REMOVED (NO STAMPING REQUIRED) FROM REMARKS COL,CA SEC ITEMS 5890,5892, 5895,5900,6000.GROUP 35CE ADDED ECPC OR OMP TO 'TO FRAME'END, CA SEC 1179 & 1184.GR 38A,CA SEC,CORRECTED ITEM 1231 TO READ SG 0 AN ADDED ITEM 1232 FOR SG 1.CHG'D STOCKLIST ITEM 1161 TO QTY OF 2 GROUPS 39F,43C,43D,63A,66A,72C REMOVED ( ) FROM 'TO END'EQL. CA SEC ITEMS 1246,1371,1376,1841,1856,1921,MISC TABLES BW,BX,BX-1 BX-2,BX-3 CORRECTED EQL TERMINALS.TERM 145 CHG'D TO READ 132 AND TERM 113 CHG'D TO READ 100.MISC TABLE DC6 EXPANDED FOR IOP2 AND IOP3 IN POS 011 AND 062.MISC TBL DC5 ADDED PCCA,CSPC,ECPC & OMP TO HEADING,ALSO CORRECTED GR 20C,EQL 019-138-032 TO READ 019-145-032.

ORIG ISS: 11/17/86 NDD NBR: H7809,H7574 CHANGE CLASS: B

DRAFT: WJV	ENGR: WJV	SUPV:	CERTIFIED: 10/04/96	ISSUE: 85

(H7894)THE FOLLOWING LINE UNIT MODEL TWO GROUPS HAVE BEEN RATED "DA",SEE TABLE A. GROUPS 156C THRU 159C,156D THRU 159D, 180 THRU 182,180A THRU 182A,180B THRU 182B,180D THRU 182D,180E THRU 182E,201 THRU 203,201B THRU 203B,211A THRU 213A,211B THRU 213B AND 221A THRU 223A.

ORIG ISS: 11/17/86 NDD NBR: NDD5D500NW-21 CHANGE CLASS: ME

DRAFT: WJV	ENGR: WJV	SUPV:	CERTIFIED: 11/11/96	ISSUE: 86

ISSUE NOTES (CONTINUED)

ENG NOTE 51 MODIFIED.REF TO CSU ADDED TO GR'S 146C,146D AND 146E. TABLE A,GR'S 146C 146D AND 146E DESCP MODIFIED TO INCLUDE CSU. GR'S 148 THRU 151,J5D003FM CHG'D TO READ J5D003FN.GR 189 ADDED REF TO VCDX.GR 381 ADDED REF TO ORM,AWS AND VCDX.GR 370 AND 371 CHG'D 735A COAXIAL CABLE MAX LENGTH FROM 250FT TO READ 225FT AND ADDED, WHEN LOCATED IN CENTRAL OFFICE.
GR 450 AND 451 CHG'D UN74B TO READ UM74B.IN CONNECTORIZED CABLING SECTION,GR 80,ITEMS 2000 THRU 2070,CHG'D NBR REQ TO READ DA.ITEMS 3355,3360,3365,3370,3375 AND 3380 MODIFIED TO INCLUDE CSU.ITEM 5750,GR 189 ADDED REF TO VCDX.GR 451,ITEM 8370 AND 8380 'TO END', UNIT CHG'D FROM BITS BOX TO DLTU3.GR 453,ITEMS 8410 AND 8420,CA CODE CHG'D TO READ 1249004A.ITEM 8220 AND 8230,DSX CHG'D TO READ DSX3 AND 250FT CHG'D TO READ 225FT. MISC TABLE CX1A,CSU EQL(TERM) CHG'D TO READ 138,146,162,170 AND 178.TBL J2 AND J3 ADDED NEW CA DESIG COL AND CHG'D EXISTING CA DESIGN COL TO READ NET NAME. CA SEC,ITEM 8345,REMARKS COL,CHG'D ED5D201-21 TO READ ED5D502-21.

ORIG ISS: 11/17/86 NDD NBR: NDD5D500NW-15 CHANGE CLASS: M

DRAFT: WJV	ENGR: WJV	SUPV:	CERTIFIED: 03/13/96	ISSUE: 80

ADDED GROUPS 38A,39F,43C,43D,63A,66A AND 72C FOR PC REPLACEMENT (AM TO MODEM OR TERMINAL CONNECTIONS). ADDED ENG NOTES 160 & 161 AND MODIFIED ENG NOTE 51. ADDED TABLES ST, STA AND STB TO MISCELLANEOUS TABLES. ADDED ITEMS 1231,1246,1371,1376,1841,1856 AND 1921 TO CONNECTORIZED CABLING TABLE. ADDED STOCKLIST ITEMS 1161,1176,1301,1306,1751,1781 AND 1921.

ORIG ISS: 11/17/86 NDD NBR: NDD5D500NW-18 CHANGE CLASS: B

DRAFT: TFL	ENGR: WJV	SUPV:	CERTIFIED: 05/31/96	ISSUE: 81

GROUP 20C ADDED TO TABLES A & DC5. IN STOCKLIST ITEMS 372, 374, 376 & 378 ADDED. IN CABLING SECTION ITEMS 690 - 693 ADDED. ITEMS 8200 - 8230 GROUPS 370 & 371 REMARKS COLUMN CHANGED. IN TABLE A GROUP 20B DA'ED. ENG NOTE 51 MODIFIED.

ORIG ISS: 11/17/86 NDD NBR: NDD5D500NW-12 CHANGE CLASS: B

DRAFT: DLP	ENGR: WJV	SUPV:	CERTIFIED: 06/10/96	ISSUE: 82

COPYRIGHT @ 2001 LUCENT TECHNOLOGIES
ALL RIGHTS RESERVED

BT13

INTERCABINET CABLING
FOR
5ESS * SWITCH
*LUCENT TRADEMARK

DWG SIZE C2 | ISSUE 117

PRINTED IN U.S.A.

ISSUE NOTES (CONTINUED)

(H8465) POINT ITEM ELIMINATION PROJECT ADDED ENGINEERING NOTE 199. REMOVED STOCKLIST ITEMS 27,30,40,50,60,70,80,190,191,229, 230,625,640,650,660,669,670,695,700,1144,1171,1172,1190,1620, 1630,1690,1700,1740,1850,2255,2256,2257,2260,2261,2265,3220, 3640,3650,3660,3665,3770,3800 AND 3830. MISCELLANEOUS TABLE T HAS BEEN ADDED FOR ALL STOCKLIST ITEMS REMOVED AND TABLE A UPDATED WITH NOTE 199 REFERENCE FOR THE FOLLOWING GROUPS: 4B,5A,5B,6,6B, 7,8A,9A,24A,27A,28,28B,28E,29B,30,36A,39A,39B,41A,52,53,58,59,62, 72A,87,87A,87B,88,89,128A,156D,157D,158D,159D,175A,176A AND 177A. ADDED REFERENCE "SEE MISC TABLE T" IN REMARKS COLUMN FOR THE CONNECTORIZED CABLE SECTION PER THE AFFECTED GROUPS. IN CC SECTION, ITEM 1232, READ "ED3T076-20,G51A".

ORIG ISS: 11/17/86 CHANGE CLASS: ME

DRAFT: WJV	ENGR: WJV	SUPV:	CERTIFIED: 01/20/99	ISSUE: 100

(H8527) DA'D GROUPS 87A, 87B, AND 89 AND REPLACED WITH GROUPS 90-95.

ORIG ISS: 11/17/86 CHANGE CLASS: B

DRAFT: GLG	ENGR: GLG	SUPV:	CERTIFIED: 02/24/99	ISSUE: 101

(H8597) MISCELLANEOUS TABLE H5 AND H6 COLUMN HEADS READ "RA TA AND RB TB". IN TABLE A MAXIMUM CABLE LENGTH READ "50". IN CONNECTORIZED CABLE SECTION ITEM 1921 READ "MAX.50 FT.".

ORIG ISS: 11/17/86 CHANGE CLASS: ME

DRAFT: PKK	ENGR: PKK	SUPV:	CERTIFIED: 03/26/99	ISSUE: 102

H8496
ENGINEERING NOTE 163 ADDED
IN CONNECTORIZED CABLING REFERENCE TO ENGINEERING NOTE 163 ADDED TO ITEMS 1176, 1177, 1178, 1179, 1180, 1183, 1184, 1185, 1187, 1188, 1190, 1191, 1400, 1410, 1420, 1430, 1440, 1450, 1460, 1470, 1480, 1490, 1500, 1510, 1520, 1530, 1540, 1550, 1560, 1570 AND 1580.

ORIG ISS: 11/17/86 CHANGE CLASS: B

DRAFT: SLB	ENGR: SLB	SUPV:	CERTIFIED: 03/26/99	ISSUE: 103

**********CHANGE TAGS H8591 & H8682**********
(H8591) CHANGED RATING FROM "DA" TO "GA" FOR THE FOLLOWING GROUPS: 180 THRU 182E.
(H8682) IN TABLE A CHANGED RATING TO "DA" FOR GROUPS 66A, 66B AND 66C. IN CONNECTORIZED CABLE SECTION ITEM 1376 CHANGED REMARKS TO READ "MAX. 200 FEET". UPDATED ENGINEERING NOTE 51 TO REFLECT NEW LENGTHS. IN TABLE A, GROUP 43C, CHANGED DESCRIPTION TO READ "X-DIM. 200 FT.".

ORIG ISS: 11/17/86 CHANGE CLASS: ME

DRAFT: PKK	ENGR: PKK	SUPV:	CERTIFIED: 07/20/99	ISSUE: 104

**** H8600 ****
ADDED GROUP 373(DNUS TERMINATING ON DSX WITH BNC CONN) AND GROUP 374(DNUS TERMINATING TO DSX GOING THRU A MISC BRIDGE REPEATER BAY) ENG NOTE 51 AND TABLE A UPDATED. CA SEC ITEMS 8236 THRU 8246 ADDED. STOCKLIST ITEMS 7387 THRU 7393 ADDED. MISC TABLES J4 AND J5 ADDED. TAG H8600. IN TABLE A, ADDED REPLACEMENT FOR DA'ED GROUPS 66A,66B AND 66C.

ORIG ISS: 11/17/86 CHANGE CLASS: B

DRAFT: WJD	ENGR: WJD	SUPV:	CERTIFIED: 08/02/99	ISSUE: 105

(H8620)
TBL A GRPS 140,140A & 140B, CA TBL ITEMS 2980, 2985 & 2990, SL ITEMS 3417,3418 & 3419 AND TBL CC3 & CC4 ADDED. TBL BF REF TO CA DESIG JR150 & JR152 ADDED. ENG NT 51 REF TO G140,140A & 140B ADDED.

ORIG ISS: 11/17/86 CHANGE CLASS: B

DRAFT: JAS	ENGR: JAS	SUPV:	CERTIFIED: 08/26/99	ISSUE: 106

ISSUE NOTES (CONTINUED)

(H8284)TBL A,GR 34A & 34B NOTE ADDED TO DESCRIPTION.CABLE SECTION GR 12C,ITEM 558,CABLE CODE CHG'D TO READ 105435309.GR 19 ITEMS 668,669 'TO FR' EQL'S 528-058 AND 628-058 CHG'D TO READ 528-( ) & 628-( ).GR 23A REMARKS COL CHG'D ED5D505-35 TO READ ED5D505-30. GR 34A & 34B ITEMS 857,881 ADDED NOTE TO REMARKS COL.GR 35CE ITEM 1179 & 1180 ADDED DSA( ),DSC( ) OR M( ) TO 'FROM FR'.GR 35CG ITEM 1190 & 1191 ADDED DSA( ),DSC( ) OR M( ) TO 'FROM FR'.GR'S 38A & 38B ITEMS 1231,1232,1233,ADDED TO M( ) OR ( ) TO 'FROM FR'. GR'S 39D & 39E ITEMS 1244 & 1245 ADDED ECPC AND OMP TO 'FROM FR'. GR 39F ITEM 1246 ADDED M( ) OR ( ) TO 'FROM FR'.GR'S 42B,42C,42D, 42E,42F,42G,42H,42J ITEMS 1320 THRU 1350 ADDED OR ( ) TO 'FROM FR'.GR'S 43C & 43D ITEMS 1371 & 1376 ADDED M( ) OR ( ) TO 'FROM FR'.GR 44 ITEM 1392 ADDED OR ( ) TO 'FROM FR'.GR 55 ITEM 1760 'FROM FR',DS( ) CHG'D TO READ DSC( ).GR'S 63A,66A,72C ITEMS 1841,1856,1921 ADDED M( ) OR ( ) TO 'FROM FR'.GR'S 80A,80C,80D ITEMS 2080,2090,2140,2150,2160,2170 ADDED NOTE IN REMARKS COL. G126 & 127 ITEMS 2680 THRU 2710 ADDED NO STAMPING REQ'D IN REMARKS COL.GR 130B ITEMS 2817 & 2819 CHG'D 'FROM FR' EQL 006 TO READ /006/.GR 131 & 132 ITEMS 2829,2830,2840,2850 CHG'D P1 & P2 TO READ J1 & J2.G133 & 133A ITEMS 2860 THRU 2873 'FROM FR' TERM ADDED J( ).GR 134,134B,135 ITEMS 2890-2920,2929-2932,2943 & 2944 'FROM FR' J1,J2,J3 & J4 CHG'D TO READ P1,P2,P3 & P4.GR 170 ITEMS 4100,4110 'FROM FR' CHG'D PPMU( ) TP READ PPMU/ /. GR'S 200,200A & 210 ITEMS 5895,5900 & 6000 'FROM FR' CHG'D M CAB TO READ M/ /.GR 370 & 371 ITEMS 8200,8210,8220,8230 ADDED '3' IN THE SHLD COL.ITEMS 8220 & 8230 RMKS COL CHG'D 10 FT TO READ 2 & 440 TO READ TO 448.IN MISC TBL BY CHG'D EQL ( )45 TO READ ( ). MISC TABLE CC1 ADDED NOTE TO REMARKS COL.TABLE A GR 87B CHG'D 50 MICRON TO READ 62.5 MICRON.STOCKLIST ITEM 2257,CHG'D ED5D518-30, G14 TO READ GR21.CA SEC ITEMS 2255,2265,2275 & 2277 CHG'D CABLE CODE TO READ 9850A3 AND REMARKS COL CHG'D ED5D518-30 ,G14 TO READ G21 AND 50 MICRON TO READ 62.5 MICRON.

ORIG ISS: 11/17/86 NDD NBR: NDD5D500NW-32 CHANGE CLASS: ME

DRAFT: WJV	ENGR: WJV	SUPV:	CERTIFIED: 04/29/98	ISSUE: 97

(H8299) PER IMR 616276 ADDED GROUPS FOR THE UN582 CIRCUIT PACK. IN TABLE A ADDED GROUPS 39G,39H,39J,39K,63B,63C,66B,66C,73 AND 74. IN STOCKLIST ADDED ITEMS 1177,1178,1179,1181,1752,1753,1782, 1783,1922,1923 AND 1924. IN CONNECTORIZED CABLE SECTION ADDED ITEMS 1247,1248,1249,1251,1842,1843,1857,1858,1922,1923 AND 1924. IN CONNECTORIZED CABLE SECTION MODIFIED ITEMS 1231,1232,1246, 1344,1346,1371,1376,1841,1856,1921,2250,2255,2260,2265,2270,2272, 2275,2277,2280,2281,2282 AND 2283. IN TABLE A MODIFIED GROUPS 38A AND 42F. MODIFIED ENGINEERING NOTES 51 AND 161. ADDED MISCELLANEOUS TABLE STC AND MODIFIED TABLES 205 AND 720. UPDATED GRAPHIC SHEETS B1,B4,B55 AND B56 REMOVING AT&T AND ADDING LUCENT.

ORIG ISS: 11/17/86 CHANGE CLASS: ME

DRAFT: PKK	ENGR: PKK	SUPV:	CERTIFIED: 06/18/98	ISSUE: 98

(H8461) IN TABLE A, GROUPS 87A AND 87B, REMOVED AT&T REFERENCE AND ADDED LUCENT; GROUP 13 ADDED TABLE REFERENCE FOR TSIU4-2. POINT ISSUE 98.1 CONNECTORIZED CABLE SECTION, ITEM 760, CHANGED REMARKS TO READ "ED5D505-35"; IN ITEM 1240 ADDED "SEE GROUP 39F FOR UN582"; ITEM 1376 ADDED REFERENCE TO TABLE STC; ITEM 1375 IN REMARKS ADDED "TN75" AND "UN582 SEE GROUP 43C"; ITEM 2270 AND 2272 IN REMARKS ADDED "BICONIC TO SC". IN MT DC AND DC1 ADDED TO THE TITLE REFERENCE TO 3B20D ONLY. IN MT DC6 UPDATED FOR REFERENCE TO CIRCUIT PACKS UN583, UN933 AND UN582.

ORIG ISS: 11/17/86 CHANGE CLASS: ME

DRAFT: PKK	ENGR: PKK	SUPV:	CERTIFIED: 10/28/98	ISSUE: 99

ISSUE NOTES (CONTINUED)

(H7827)ADD GR 17 FOR PSU2 FIBER OPTIC PCT LINKS FROM DF2(UN592) TO TSIU4/4-2.ENG NOTE 51 UPDATED.CA SEC ITEMS 636,637,638 AND 639 ADDED. STOCKLIST ITEMS 289 AND 290 DELEATED AND REPLACED BY NEW ITEMS 296 AND 297.ITEMS 292 AND 293 ADDED.MISC TABLES BX-6 AND N6 ADDED.FIG Z1 AND M12 ADDED ON NEW SHEETS B55 & B56.

ORIG ISS: 11/17/86 NDD NBR: NDD5D003NW-747 CHANGE CLASS: B

DRAFT: WJV	ENGR: WJV	SUPV:	CERTIFIED: 08/01/97	ISSUE: 93

(H8141)ENG NOTE 161 MODIFIED.TABLE A,GR 36,REF TO A/V ALM PNL ADDED.GROUPS 36D & 36E ADDED REF (SEE J5D005C-1).CABLE SECTION ITEM 860,"TO FRAME",PCCA CHG'D TO PCCA0 AND ITEM 865,"TO FRAME", CHG'D TO PCCA1.ITEM 1183 "FROM FRAME" AND EQL ADDED / /.ITEM 1184 AND 1185 ADDED / / TO BAY 0 & 1.ITEM 1200 ADDED REF A/V ALM PNL TO "TO FRAME".ITEMS 1231 AND 1232 ADDED REF TO TABLE STA FOR CA IDENT.REMARKS CO, FOR ITEMS 1231,1232,1240,1243 THRU 1250 ADDED CIRCUIT PACK REF.ITEMS 1344,11346 & 1348 ADDED SM2K,LTP ( ) TO "TO FRAME".ITEM 1398 "FROM FRAME" TERM CHG'D TO READ 003 & 006 AND "TO FRAME" TERM CHG'D TO READ 103 & 106.ITEM 1856 REMARKS COL ADDED (MAX 250 FT).ITEMS 3606,3607 & 3611, "FROM FRAME" ADDED, OR SMC1.ITEM 4092 CABLE POS CHG'D TO READ L AND R/L.MISC TABLE ST,NOTE 2B,CHG'D PORTS 1,2,3 & 4 TO READ 0.1.2 & 3.MISC TABLE STA CHG'D PORTS 1,2,3 & 4 TO READ 0,1,2 & 3.

ORIG ISS: 11/17/86 NDD NBR: NDD5D500NW-30 CHANGE CLASS: ME

DRAFT: WJV	ENGR: WJV	SUPV:	CERTIFIED: 10/30/97	ISSUE: 94

(H8260)NEW GROUPS 34B,34C AND 34D ADDED FOR MISC CABINET E/W J5D003FH FAN UNIT.

ORIG ISS: 11/17/86 NDD NBR: NDD5D500NW-31 CHANGE CLASS: B

DRAFT: WJV	ENGR: WJV	SUPV:	CERTIFIED: 12/11/97	ISSUE: 95

(H7827) GROUP 17 RATED 'DA' AND REPLACED BY ED5D734-10 AND CAB2000.

ORIG ISS: 11/17/86 NDD NBR: NDD5D003NW-747 CHANGE CLASS: B

DRAFT: WJV	ENGR: WJV	SUPV:	CERTIFIED: 12/22/97	ISSUE: 96

COPYRIGHT @ 2001 LUCENT TECHNOLOGIES
ALL RIGHTS RESERVED

BT13

INTERCABINET CABLING
FOR
5ESS * SWITCH
*LUCENT TRADEMARK

DWG SIZE C2 | ISSUE 117

LUCENT TECHNOLOGIES INC | ED5D500-21 | SHEET A5 OF 292

PRINTED IN U.S.A.

ISSUE NOTES (CONTINUED)

(H09206)
TABLE A: MODIFIED GROUP 148F TO INCLUDE TERMS "(8COND, PVC CABLE)"; ADDED GROUPS 148G, 148H AND 148J.

ENGINEERING NOTES: IN NOTE 51, MODIFIED GROUP 148F TO INCLUDE TERM "(8 COND, PVC)" IN DESCRIPTION; ADDED GROUPS 148G, 148H AND 148J; NOTE 94, CHANGED NOTE FROM "300MB INVERTER" TO READ "3 KVA INVERTER".

STOCKLIST: ADDED ITEMS 3591-3593;
FOR ITEM 1177, PRODUCT IDENTIFIER READ "G52A".

CONNECTORIZED CABLING: ADDED ITEMS 3569-3571;
FOR ITEM 1247, REMARKS READ "G52A".

MISCELLANEOUS TABLES: MODIFIED TABLE CX1A TO INCLUDE CABLE 148G; ADDED TABLE CX1C.

(THIS ISSUE INCORPORATES CHANGES REQUESTED FORM AR# 213252)

(H09215)
IN TBL A, GRPS 380, 381, 454 & 455, "1175ARD RED JACKET" ADDED.
IN CONN CABLING TBL, ITEMS 8250-8256 & 8430-8460,
CABLE CODE READ 1249004C; IN THE REMARKS COL FOR
ITEM 8250, ED5D901-30,G1 READ ED5D503-32,G380
ITEM 8251, ED5D901-30,G2 READ ED5D503-32,G380A
ITEM 8255, ED5D901-30,G3 READ ED5D503-32,G381
ITEM 8256, ED5D901-30,G4 READ ED5D503-32,G381A
ITEM 8430, ED5D901-30,G5 READ ED5D765-17,G26
ITEM 8440, ED5D901-30,G6 READ ED5D765-17,G27
ITEM 8450, ED5D901-30,G7 READ ED5D765-17,G28
ITEM 8460, ED5D901-30,G8 READ ED5D765-17,G29
ITEMS 8250-8256 & 8430-8460 IN REMARKS, REPL INFO & "NEW GROUP IS RED JACKET CABLE." ADDED.
SL ITEM 7400 READ ED5D503-32,G380;
ITEM 7401 READ ED5D503-32,G380A; ITEM 7450 READ ED5D503-32,G381;
ITEM 7451 READ ED5D503-32,G381A; ITEM 8450 READ ED5D765-17,G26;
ITEM 8500 READ ED5D765-17,G27; ITEM 8550 READ ED5D765-17,G28;
ITEM 8600 READ ED5D765-17,G29. IN DESC, REPL INFO ADDED FOR ABOVE SL ITEMS.
SL ITEM 1179, G41A READ G53A & REPL INFO ADDED.
CONN CABLING TBL ITEM 1249, 408457257 READ 1246004C & IN REMARKS COL, G41A READ G53A; ITEM 3170, G145J READ G145.
IN TBL A G103, "CABLE IS ONLY...SHELF" READ "CABLE IS NOT REQD WHEN MMSU SHELF IS CONNECTED TO AIU" PER AR# 343451.

(H09291)
IN TBL A & ENGR NOTE 51, G370A ADDED. SL ITEM 7377 ADDED.
IN CONN CABLING TBL, ITEM 8215 ADDED. MISC TBL J6 ADDED.
IN TBL A DESC FOR GRPS 370, 370A, 371, 373 & 374, DSX READ DSX3.
IN CONN CA TBL COL FR OR UNIT FOR ITEMS 8220, 8230, 8244 & 8246, DSX READ DSX3.

ORIG ISS: 11/17/86 CHANGE CLASS: B

DRAFT: MDK	ENGR: JTC	SUPV: PK	CERTIFIED: 04/05/01	ISSUE: 116

H09344

TABLE A: ADDED GROUP 145K.

STOCKLIST: ADDED ITEMS 3492 AND 3496.

ENGINEERING NOTES: EN51: ADDED GROUPS 145B-145K.

CONNECTORIZED CABLING: ADDED ITEMS 3175 AND 3180.

MISCELLANEOUS TABLES: TABLE BB2: ADDED GROUP 145K.

ORIG ISS: 11/17/86 CHANGE CLASS: B

DRAFT: MDK	ENGR: MDK	SUPV: PK	CERTIFIED: 06/29/01	ISSUE: 117

ISSUE NOTES (CONTINUED)

(H09113) IN TABLE A ADDED NEW GROUPS 460 THRU 464. IN ST ADDED ITEMS 8650 AND 8655. ADDED NEW GROUPS TO ENGINEERING NOTE 51. ADDED MISC TBL CC5 AND ADDED NEW GROUPS TO MISC TBL T. IN CONNECTORIZED CABLE SECTION ADDED ITEMS 8470 THRU 8495.

ORIG ISS: 11/17/86 CHANGE CLASS: B

DRAFT: JAS	ENGR: JAS	SUPV:	CERTIFIED: 12/08/00	ISSUE: 113

(H09200) IN TABLE A, LIST 103, ADDED: "CABLE IS NOT REQUIRED WHEN MMSU SHELF IS CONNECTED TO AIU.

ORIG ISS: 11/17/86 CHANGE CLASS: B

DRAFT: PKK	ENGR: PKK	SUPV:	CERTIFIED: 01/15/01	ISSUE: 114

(H09255) IN TABLE A ADDED GROUPS 145B THRU 145J. IN ST ADDED ITEMS 3481 THRU 3488. IN CONNECTORIZED CABLE SECTION ADDED ITEMS 3135 THRU 3170. THIS CHANGE FOR SPECIAL DFI PACK ARRANGEMENT ON DLTU2 FOR AT&T. APPLIED AR 305716, CHANGING CC SECTION ITEM 825 TO CABLE CODE 820AS AND MT T GROUP 28E COMCODES READ "105412589 AND 100997394". ADDED NEW GROUPS TO MT BB2.

ORIG ISS: 11/17/86 CHANGE CLASS: B

DRAFT: PKK	ENGR: PKK	SUPV:	CERTIFIED: 01/25/01	ISSUE: 115

ISSUE NOTES (CONTINUED)

H8668
IN TABLE A, GROUP 148F ADDED. ENG NOTE 51 UPDATED FOR GROUP 148F. IN CA SECTION, ITEM 3568 ADDED, SL ITEM 3590 ADDED. IN MISC TABLES, CX1A RENAMED TO CX1B AND NEW CX1A ADDED FOR GROUP 148F ONLY.

ORIG ISS: 11/17/86 CHANGE CLASS: ME

DRAFT: LRS	ENGR: REW	SUPV:	CERTIFIED: 10/21/99	ISSUE: 107

(H8599) TABLE A, DA'ED GROUPS 12, 13, 14 AND 15; ADDED PHRASE "REPL:NONE" TO THE DESCRIPTION OF GROUPS 373 AND 374.

ORIG ISS: 11/17/86 CHANGE CLASS: B

DRAFT: MDK	ENGR: MDK	SUPV: PK	CERTIFIED: 02/28/00	ISSUE: 108

(H09073) ENG NT 51: G38A,72C MAX LG READ 50FT, G75 ADDED REF TO 50FT, G79 ADDED, G92 TRCU2 READ TRCU3, G104A TBL A2 READ A1.
TBL A: G38A LENGTH READ 50FT, G72C LG READ 100FT, G75 REF TO 50FT ADDED, G79 ADDED. CA TBL: ITEM 2300 RMVED, ITEM 1945 ADDED, ITEM 875 REMARKS FROM PER READ ED5D842-30 G59, REF TO REPL:ED5D505-30, G233 RMVED, ITEM 1231,1232 REMARKS READ 50FT, 1921 REMARKS READ 100FT, 2272 CA ID READ J132, 2277 FROM FR. SMC// ADDED, 2301 AND 2303 CA ID READ JL131 AND JL132, 3010,3015 TO TERM COLUMN TBL READ TB. S/L: ADDED ITEM 1950. MISC TBL STA: ADDED G65 AND CONN POS 1 AND 2. TBL STB: ADDED G65 AND CONN 3 IDENT. TBL STC: ADDED RECORD IDENT [1120], G79/G65. TBL KA3: 505-30 G159B READ 842-30 G22. TBL KA4: G161D,E,F,G,H READ 27,28,29,30,31; 505-30 READ 842-30. TBL T: G87A,87B,89 REF TO DA ADDED.

ORIG ISS: 11/17/86 CHANGE CLASS: ME

DRAFT: MDW	ENGR: JAS	SUPV:	CERTIFIED: 06/07/00	ISSUE: 109

(H09118) IN CC TABLE, ITEMS 840, 1110, 1170, 1183, 2700, 2710, 3020, 5805-5850, 5865, 5880 & 5885, WP93746L1 READ KS13385L1.
CARE 70978: IN CC TABLE ITEM 824, CABLE CODE READ "812A".
IN MT T, G28E READ "812A CABLE".
CARE 77329: UPDATED EN 163 TO REFLECT SHIELD 3.

ORIG ISS: 11/17/86 CHANGE CLASS: ME

DRAFT: JTC	ENGR: JTC	SUPV:	CERTIFIED: 08/29/00	ISSUE: 110

---H8626------
GRPS 76,77 AND 78 ADDED TO TABLE A,EN 51,IN CC SECT ITEMS 1925, 1926,1930 AND 1940 ADDED.NEW TABLES CN1,STD,STE,CN2 AND STF ADDED.

ORIG ISS: 11/17/86 CHANGE CLASS: B

DRAFT: LRS	ENGR: LRS	SUPV:	CERTIFIED: 09/05/00	ISSUE: 111

(H09161) CARE 99907 STATES THAT ON SHEET B19, FIG. J2, IS NOT IN AGREEMENT WITH THE ADDITION AND MULTING OF AUDIBLE AND VISUAL ALARM PANELS PER NE00312-31, G1. ADDED NEW GRAPHIC SHEET B20 AND CONTINUED THE FIG. J2 WITH THE NEEDED INFORMATION. ALL SHEETS RENUMBERED AND ADDED NEW TITLE BOX FORMAT. CARE 183916 IN CC SECTION RN 2301, 2303 AND 2305 COMCODE READ "180008146" AND IN MT T G94.

ORIG ISS: 11/17/86 CHANGE CLASS: B

DRAFT: PKK	ENGR: PKK	SUPV:	CERTIFIED: 10/06/00	ISSUE: 112

COPYRIGHT @ 2001 LUCENT TECHNOLOGIES
ALL RIGHTS RESERVED

BT13

INTERCABINET CABLING
FOR
5ESS * SWITCH
*LUCENT TRADEMARK

DWG SIZE C2 | ISSUE 117

LUCENT TECHNOLOGIES INC | ED5D500-21 | SHEET A6 OF 292

PRINTED IN U.S.A.

ENGINEERING NOTES

***** CONTINUED *******

	SMC E/W AU FUSE/FILTER PNL TO EITHER A NEW SM OR CM2 OR 2SM'S IN SMC E/W FJ (MOD) FUSE/FILTER PNL (FOR C.O. E/W CM2, OR MMRSM)
42H	INTERCABINET COMM CKT MULT BETWEEN AN EXISTING RECNFGR SMC E/W BT FUSE/FILTER PNL OR CM2 E/W BJ FUSE/FILTER PNL TO A NEW SM OR CM2 OR 2SM'S IN SMC E/W FJ (MOD) FUSE/FILTER PNL (FOR C.O. E/W CM2, OR MMRSM)
42J	INTERCABINET COMM CKT MULT BETWEEN A NEW SM OR CM2 OR 2SM'S IN SMC OR A RING NODE CABINET E/W FJ (MOD) FUSE/FILTER PNL TO A NEW SM OR CM2 OR 2 SM'S IN SMC E/W FJ (MOD) FUSE/FILTER PNL. (FOR C.O. E/W CM2 OR MMRSM)
43	212AR DATA SET TO TN75C
43A	212AR DATA SET TO TN74B
43B	MODEM TO TN75C/85C
43C	3800 SERIES MODEM TO A UN582 CP (RS232C SYNCHRONOUS DATA LINK, 200' MAX.)
43D	3800 SERIES MODEM OR 2224 CEO MODEM TO UN582 CP (RS232C ASYNCHRONOUS DATA LINK, 100'MAX.)
44	MISC FUSE/FILTER ALM MULT (AU-2 TO AU-2 F/F)
44A	MISC FUSE/FILTER ALM MULT (AU-2 TO FJ-1 F/F)
44B	MISC FUSE/FILTER ALM MULT (FJ-1 TO FJ-1 F/F)
44C	MISC FUSE/FILTER ALM MULT (FJ-1 TO AU-2 F/F)
44D	MISC FUSE/FILTER ALM MULT (AU-2 TO FJ-1 F/F)
44E	MISC FUSE/FILTER ALM MULT (FJ-1 TO FJ-1 F/F)
44F	MISC FUSE/FILTER ALM MULT (FJ-1 TO AU-2 F/F)
45	ADDITIONAL SCAN POINTS 48 TO 95
45A	ADDITIONAL SCAN POINTS 96 & 97 FOR PDF 6 & 7
46	MUSIC ON QUEUE
46A	MUSIC OR SILENCE ON QUEUE
46B	MUSIC ON QUEUE (MUSIC PROGRAM)
46C	MUSIC OR SILENCE ON QUEUE
50	TAU (MMSU MTB, PORTS 0-7)
51	TAU (MMSU MTB, PORTS 8-14)
52	2ND OR 3RD EXIT PILOT LAMP
53	4TH,5TH OR 6TH EXIT PILOT LAMP FROM OAU ONLY (DO NOT USE WHEN VIS RARU IS SPECIFIED)
54	TAU FOR MCC/TLWS OR STLWS
54A	TAC (ED5D652-30) EXPORT ONLY FOR MCC/TLWS OR STLWS
55	212AR DATA SET TO DF
56	48FR1 DS TO DF (4-WIRE LOCAL)
56A	48FR1 DS TO DF (8-WIRE DIAL BACK-UP)
58	MCC/TLWS OR STLWS TO DF (CONSOLE TYPE)
59	46A2 DATA MTG TO DF
60	ROP (5310/5320 PRINTER) (STLWS 1-6) (MAX. 50')
61	VT100 (STLWS 1-6) (MAX 50')
62	MCC/TLWS OR STLWS TO DF (IN LINE CABINETS OR CONSOLE).
63	COL VT OR AT&T 444 OR 572 PRINTER (STLWS 1-6) (MAX. 50')
63A	ROP (572 OR 577 PRINTER) OR A KS23996,L1 OR 2900 SERIES TERMINAL TO A UN582 CP (NULL MODEM RS232 ASYNCHRONOUS DATA LINK, 250' MAX.)
63B	VT100 TO AN UN582 CP PROVIDING NULL MODEM RS232C.
63C	COLOR VT TO A UN582 CP PROVIDING A RS232C.
64	ROP (5310/5320 PRINTER) (STLWS 1-6) (MAX. 250')
65	VT100 (STLWS 1-6) (MAX. 250')
66	COL VT OR AT&T 444 OR 572 PRINTER (STLWS 1-6) (MAX. 250')
66A	ROP (572 OR 577 PRINTER) OR A KS23996,L1 OR 2900 SERIES TERMINAL TO A UN582 CP (NULL MODEM RS232C ASYNCHRONOUS DATA LINK, 250' MAX.)
66B	VT100 TO A UN582 CP PROVIDING NULL MODEM RS232C.
66C	COLOR VT TO A UN582 CP PROVIDING A RS232C.
67	ROP (5310/5320 PRINTER) OR VT100 (STLWS 1-6) TO 202T OR 212AR DS (MAX. 50')
67A	ROP (5310/5320 PRINTER) OR VT100 (STLWS 1-6) TO DS MAX. 250')
68	COL VT OR AT&T 444 OR 572 PRINTER (STLWS 1-6) TO 202T OR 212AR DS (MAX. 50')
68A	COL VT OR AT&T 444 OR 572 PRINTER (STLWS 1-6) TO DS. (MAX. 250')
69	MOD 43 TTY TO 212AR
70	MSA TO KS22636 L1 ADAPTER
71	212A DS TO TN74B
72	2556B DS TO TN82
72A	103A CONN BLK TO DF
72B	103A CONN BLK TO 103A CONN BLK
72C	2556B DATA SET OR 3500 SERIES MODEM TO A UN582 CP (V.35/V.36 DATA LINK, 150' MAX.)
73	CONTROL DATA SET TO A UN582 CP PROVIDING A RS232C.
74	CONTROL DATA SET TO A UN582 CP PROVIDING A MODEM RS232C.
75	2024A, 2048A OR 2096A DATA SET TO A UN582 CP PROVIDING A RS449 DATA LINK. (50 FT MAX LENGTH)
76	MISC CAB OKEFORD 4U SIGNALING PROTOCOL CONVERTER E1 TRUNK SIG TO DSX
77	MISC CAB OKEFORD 4U SIGNALING PROTOCOL CONVERTER ALM SIG TO MDF
78	MISC CAB CRONUS SIGNALPATH 230 SIGNALING PROTOCOL CONV EI TRUNK SIG TO DSX.
79	2024A, 2048A OR 2096A DATA SET TO A UN582 CP PROVIDING A RS449 DATA LINK. (150 FT MAX LENGTH)
80	RSM (MULT-MOD) RCU 'DA' REPLC'D WITH G80F
80A	RSM (MULTI-MOD) RCU-T1 REF EXPORT ONLY.

---------- CONTINUED ON NEXT SHEET ----------

ENGINEERING NOTES

***** CONTINUED *******

29A	2ND INVERTER 20816L1A (SC & -48VABS) (DA)
29B	2ND INVERTER (WP-91652,L20,101). REQUIRED ONLY IF MOUNTED IN A DIFFERENT MISC CAB THAN THE FIRST INVERTER
30	EXTERNAL SANITY MONITOR (NOT REQD FOR OFFICES WITHOUT LU'S)
31	EXTERNAL SANITY MONITOR (NOT REQD FOR OFFICES WITHOUT LU'S)
32	LAU IN M CAB DSL TO DF
33	LAU IN M CAB TA TO 9.6KBPS SYNC DS (HOST ONLY) OR TO ME ST ALONE (API).
34	3BE FAN UNIT IN M CAB (ALARM SC) TO DF DA(RPLCD BY G34CE)
34A	3BE FAN UNIT IN M CAB (ALARM SC) (MULT) FAN UNIT IN M CAB
34B	3FH FAN UNIT IN M CAB (ALARM SC) (MULT) FAN UNIT IN M CAB
34C	3FH FAN UNIT IN M CAB (REMOTE APPLICATION ONLY)
34D	3FH FAN UNIT IN M CAB (FOR CO OFFICE ONLY)
34CE	3BE FAN UNIT IN M CAB (REMOTE APPLICATION ONLY) COST EFFECTIVENESS GROUP REPLACING GROUP 34)
34CF	3BE FAN UNIT IN M CAB (FOR CO OFFICE ONLY)
35	OFFICE ALARM UNIT (C.O. ONLY) DA (RPLCD BY G35CE)
35A	ADDNL AUD ALM PNL OR AUD/VIS ALARM UNIT (J5D005C-1,L16) (RARU AUD)
35B	AUD ALM PNL OR AUD/VIS ALM UNIT (OAU ONLY, WHEN AUD RARU IS NOT SPECIFIED)
35C	AUDIBLE ALARM PNL OR AUD/VIS ALM UNIT (WHEN RARU AUD IS IN OTHER CAB THAN OAU)
35CE	OFFICE ALARM UNIT (C.O. ONLY) (COST EFFECTIVENESS GROUP REPLACING GROUP 35)
35CG	REQUIRED IN ADDITION TO GR 35CE WHEN CABLING TO A 3B21D(CSPC) ONLY
35CH	REQUIRED IN ADDITION TO GR 35CE WHEN CABLING TO A 3B20D(PCCA) ONLY
36	1ST EXIT PILOT LAMP
36A	EXIT PILOT LAMPS (J5D005C-1,L16) (RARU VIS)
36C	EXIT PILOT LAMPS (WHEN RARU VIS IS IN OTHER CAB THAN OAU)
36D	DEAD SYS ALM (DSA) FOR 3B20 (OAU MISC CAB)
36E	DEAD SYS ALM (DSA) FOR 3B21 (OAU MISC CAB)
37	201C DS TO TN75B (MC4C048A1) OR PARADYNE DS 9.6KBP/S SYNC TO TN75C CP
38	201C OR 2024 DS TO TN83 (MC4C041A1)
38A	3800 SERIES MODEM OR MCC-ROP OR 577 PRINTER TO A UN583 CP (RS232C SYNCHRONOUS DATA LINK, 200' MAX.)
38B	KS23996L2 TERMINAL TO 572 PRINTER (SEE NOTE 162)
39	202T DS TO TN74 (MC4C011A1)
39A	3000K TYPE GANDALF MTG TO DF (1 MODEM)
39B	3000K TYPE GANDALF MTG TO DF (14 MODEMS)
39C	3309 GANDALF DS TO TN74B DSC-E
39D	3309 GANDALF DS TO TN74B 250' MAX DSC-E
39E	AT&T STU-3 SECURE DATA DEVICE,MODEL 1900 ONLY, MOUNTED ON DS CAB TO A PCC.
39F	3800 SERIES MODEM TO A UN582 CP (RS232C ASYNCHRONOUS DATA LINK, 50' MAX.)
39G	202T DATA SET TO A UN582 CP.
39H	GANDALF 3309 DATA SET TO A UN582 CP.
39J	GANDALF 3309 DATA SET TO A UN582 CP.
39K	AT&T STU-II SECURE (MODEL 1900) DATA SET TO A UN582 CP
40	204A,2048A OR 2096A DS TO TN75B (MC4C048A1) OR TN75C
41A	POWER FOR INTERCABINET COMM CIRCUIT
41C	INTERCABINET COMM CIRCUIT TO DF FOR START OF MULT AT SM E/W AU TYPE FUSE/FILTER PNL (FOR C.O. E/W CM2, NOT FOR RSM)
41D	INTERCABINET COMM CIRCUIT TO DF FOR START OF MULT AT CM2 OR SM E/W BT TYPE FUSE/FILTER PNL (FOR C.O. E/W CM2, NOT FOR RSM)
41E	INTERCABINET COMM CIRCUIT TO DF FOR START OF MULT AT CM2, SM OR SMC (CONTAINING TWO SM'S) OR RING NODE CABINET EQUIPPED WITH A MODULAR FUSE/FILTER PANEL (J5D003FJ) (FOR C.O. E/W CM2, NOT FOR RSM).
42A	INTERCABINET COMM CKT MULT BETWEEN SM EACH E/W AU TYPE FUSE/FILTER PNL (FOR C.O. E/W CM2, OR MMRSM)
42B	INTERCABINET COMM CKT MULT BETWEEN BAYS IN CM2 OR SM EACH E/W BT TYPE FUSE/FILTER PNL OR CM2 TO SM E/W BT TYPE FUSE/FILTER PNL (FOR C.O. E/W CM2, NOT FOR RSM)
42C	INTERCABINET COMM CKT MULT BETWEEN SM E/W AU TYPE FUSE/ FILTER PNL AND CM2 OR SM E/W AU TYPE FUSE/FILTER PNL TO SM E/W BT TYPE FUSE/FILTER PNL (FOR C.O. E/W CM2, NOT FOR RSM)
42D	INTERCABINET COMM CKT MULT BETWEEN CM2 AND SM E/W AU TYPE FUSE/FILTER PNL OR SM E/W BT TYPE FUSE/FILTER PNL TO SM E/W AU TYPE FUSE/FILTER PNL. (FOR C.O. E/W CM2 NOT FOR RSM)
42E	INTERCABINET COMM CKT MULT BETWEEN A NEW SM OR CM2 OR 2SM'S IN SMC E/W FJ MOD FUSE/FILTER PNL TO AN EXISTING RECNFGR SMC E/W AU FUSE/FILTER PNL (FOR C.O. E/W CM2, OR MMRSM)
42F	INTERCABINET COMM CKT MULT BETWEEN A SM OR CM2 OR 2SM'S IN SMC E/W FJ MOD FUSE/FILTER PNL TO EITHER A CM2 E/W BJ FUSE/FILTER PNL OR RECNFGR SMC E/W BT FUSE/FILTER PNL (FOR C.O. E/W CM2, OR MMRSM)
42G	INTERCABINET COMM CKT MULT BETWEEN AN EXISTING RECNFGR

------ CONTINUED TO THE LEFT ------

ENGINEERING NOTES

51. DRAWING CONTAINS ENGINEERING INFORMATION FOR ORDERING ALL STAMPING INFO FOR NEW CSPC(3B21D) ADDED.GROUPS 20A,20B,31,34CF, ESS NO.5 INTERCABINET CABLES WITH GENERAL AVAILABILITY (GA) 35CE,39C,39D,40,43,43A,43B,45,45A,60,61,63,64,65,66,71 AND 72 RATING, EXCLUDING PBX. JOB INFORMATION SHALL BE RECORDED BY CHANGED TO TERMINATE ON EITHER 3B20D(PCCA 0/1) OR 3B21D(CSPC). LIST OF GROUP.
GROUP 35CG ADDED. ASSY GROUPS ED5D505-30,105 AND 109 REMOVED FROM GROUP 35CE AND BECAME NEW GROUP 35CH.A SECOND SET OF DUPLICATED INDEX NCT2 LINKS ADDED TO GROUP 13.TBL A AND CONNECTORIZED CABLE
SECTION CHANGED AND NEW FIG 8M ADDED.NEW TBL F5 ADDED FOR SINGLE FAB NCT2 LINKS.

GRP	EQUIPMENT
4	SM CO 62.5 MICRON FO FROM MCTU TO CM1
4A	SM CO 62.5 MICRON FO FROM MCTU2 TO CM1
4B	SM CO 50 MICRON FO FROM MCTU2 TO CM1
4C	CM1 TMS-MSG ODL50 62.5 MICRON FO
5A	SM CO MICRON FO FROM MCTU TO CM2
5B	SM CO 50 MICRON FO FROM MCTU2 TO CM2
6	TRM (2MI) FIBER OPTICS FROM MCTU (REM MOD)
6B	TRM (2MI) FIBER OPTICS FROM MCTU2 (REM MOD)
7	TRM (2MI) FIBER OPTICS FROM TMSU2 (HOST MOD) OR LSM SHARING CP WITH TRM (SEE NOTE 96)
8A	ORM 50 MICRON FO FROM TRCU (L1) TO CM2 (HOST)
8B	ORM 62.5 MICRON FO FROM TRCU2 L3 OR L4 TO CM1
8C	ORM 62.5 MICRON FO FROM TRCU2 L3 OR L4 TO CM2
8D	ORM 62.5 MICRON FO FROM TRCU1 L1 OR L2 TO CM1
8E	ORM 62.5 MICRON FO FROM TRCU1 L1 OR L2 TO CM2
9A	ORM 50 MICRON FO FROMTRCU (L2) TO CM2 (HOST)
10	SM CO 62.5 MICRON FO FROM MCTU TO CM2
10A	SM CO 62.5 MICRON FO FROM MCTU2 TO CM2
12	SM CO 62.5 MICRON FO FROM MCTU TO CM1 (982TRA/TSA CONN ONLY)
12A	SM CO 62.5 MICRON FO FROM MCTU2 TO CM1 (982TRA/TSA CONN ONLY)
12B	CM1 TMS-MSG ODL50 62.5 MICRON FO (982TRA/TSA CONN ONLY)
12C	ORM 62.5 MICRON FO FROM TRCU2 L3 OR L4 TO CM1 (982TRA/TSA CONN ONLY)
12D	ORM 62.5 MICRON FO FROM TRCU2 L3 OR L4 TO CM2
12E	ORM 62.5 MICRON FO FROM TRCU1 L1 OR L2 TO CM1 (982TRA/TSA CONN ONLY)
12F	ORM 62.5 MICRON FO FROM TRCU1 L1 OR L2 TO CM2 (982TRA/TSA CONN ONLY)
12G	SM CO 62.5 MICRON FO FROM MCTU TO CM2 (982TRA/TSA CONN ONLY)
12H	SM CO 62.5 MICRON FO FROM MCTU2 TO CM2 (982TRA/TSA CONN ONLY)
13	SM2000 CO 62.5 MICRON FO FROM TSIU4 OR TSIU4-2 TO CM2 (982TRA AND 982TSA CONN ONLY)
14	62.5 MICRON F.O. FROM DNU-S TO TSIU4 OR TSIU4-2
15	SM CO 62.5 MICRON FO FROM MCTU3 TO CM2 (982TRC/TSC CONN ONLY)
17	62.5 MICRON F.O. FROM PSU2 E/W DF2(UN592) TO TSIU4 OR TSIU4-2
18A	DLTU-E T1 REF (CM2) E/W ANN8B PACK
18B	DLTU-E T1 REF (CM2) E/W ANN103 PACK
19	DLTU-3 T1 REF (CM2)
20	ADDITIONAL SD POINTS (PCCA)
20A	ADDITIONAL SD POINTS (PCCA)
20B	ADDITIONAL SD POINTS PC11 (PCCA) "DA"
20C	ADDITIONAL SD POINTS PC11 (PCCA)(SD POINTS 28/29 REMOVED)
22	RESISTOR PNL (0-3) TO DF 711 (89M BLK) SEE TABLE A1
22B	RESISTOR PNL (0-3) TO DF TRW (89M BLK) SEE TABLE A1
23	RESISTOR PNL (0-3) 89G BLK 711
23A	RESISTOR PNL (0-3) DF SWC
24	PD ALM CO ONLY (WHEN G136E OR 198 IS NOT SPEC)
24A	PWR DISTR CNTR PNL (ED83024-30) OR PWR DISTR ALARM PNL (ED83133-30) IN MISC CAB, RSM ONLY
27	13A AND 13A+ RA
27A	13A AND 13A+ RA
28	14A RA (HOST OFF ONLY
28A	14 RA (RSM ONLY)
28B	15A RECORDED ANNOUNCEMENT (TRUNK SIDE)
28C	15A REC ANNC. E/W RECORDED CONCENTRATOR OR ANOLOG LINE
28D	16A ANNOUNCEMENT CABLING
28E	16A ANNOUNCEMENT CABLE(BULK)
29	1ST INVERTER 20816L1A (ALARM SC29,30) (DA)

------ CONTINUED TO THE LEFT ------

COPYRIGHT @ 2001 LUCENT TECHNOLOGIES
ALL RIGHTS RESERVED

BT13

INTERCABINET CABLING
FOR
5ESS * SWITCH
*LUCENT TRADEMARK

DWG SIZE C2 | ISSUE 117

PRINTED IN U.S.A.

ENGINEERING NOTES

***** CONTINUED *******

|----------|

94. A MINIMUM OF 8" MUST BE KEPT BETWEEN QUIET GROUND LEADS AND THE POWER OR GROUND LEADS FOR THE 3 KVA INVERTER.

95. COAXIAL CABLES FOR ORM ARE PROVIDED WITH WIRE MARKERS FOR BETTER IDENTIFICATION. CONNECT THOSE CABLES WITH CORRESPONDING NUMBERS TOGETHER.

96. WHEN LOCAL SM NCT LINKS SHARE THE SAME BOARD (CKT2) AS TRM (CKT1) ON CM2 DUAL FABRIC, GROUP 7 MUST BE ORDERED FOR THAT SM IN LIEU OF GROUP 5A OR 5B. SMC 'J' DRAWING WILL PROVIDE A KIT CONTAINING 8 JUMPER CABLES (ED5D518-30,G7 & 8 AND 3 SETS OF ATTENUATORS).

97. 8 MICRON YELLOW JACKETED FIBER OPTIC TRANSMIT CABLE ORDERED PER GROUP 87 IS MANUFACTURED IN ATLANTA AS A DOUBLE ENDED CABLE, EQUIPPED WITH BICONIC 2016A CONNECTOR AT BOTH ENDS. SINCE THE REQUIREMENT FOR THIS CABLE SPECIFIES CONNECTOR ONLY AT TRCU2 END (LGX END WILL BE EQUIPPED PER ENG SPEC BY CUSTOMER), LINE ENG WILL ORDER ONLY ONE 8 MICRON FO CABLE PER ED GROUP WITH 'X' DIM OF CUMULATIVE LENGTH OF BOTH JL131 & JL132 CABLES. CABLE WILL BE CUT TO TWO CABLES WHEN NEEDED.

98. THE 845620996 COAX FEED-THRU BUS BAR ASSEMBLY IS PROVIDED WITH CABLE GROUP 85 (DA) OF ED5D500-21, THE 845623925 COAX FEED-THRU BUS BAR ASSEMBLY IS PROVIDED WITH CABLE GROUP 85A & 86 OF ED5D500-21. IT MUST BE INSTALLED WITHIN AND BONDED TO THE MAIN GROUND BUS BAR GROUND WINDOW AND MUST BE ISOLATED FROM BUILDING GROUND. THE MOUNTING MATERIAL SHOWN IN ED5D022-11 FIG. F (845620996) OR FIG. L (845623925) IS NOT PROVIDED WITH ED5D500-21 GROUP 85, 85A OR 86(DA), 86A AND MUST BE ORDERED BY THE LINE ENG AS REQ'D. THE MATERIAL SHOWN IS A TYPICAL AND CAN BE CHANGED TO MEET JOB CONDITIONS. FOR A TYPICAL MOUNTING OF THE COAX FEED-THRU BUS BAR SEE ED5D022-11, FIG.F (845620996) OR FIG. L (845623925).

99. DOLLAR SIGNS ($) IN FRONT OF AND BEHIND WORDS, SENTENCES, PARAGRAPHS AND/OR CHARACTERS INDICATE HORIZONTALLY LINED OUT INFORMATION.

100. THIS CABLE IS MANUFACTURED IN ATLANTA AND IT SHOULD BE SHIPPED DIRECTLY TO THE JOB SITE.

151. 8.3 MICRON LIGHTGUIDE CABLE JL131 & JL132 (G87A (DA)) G90 AND G91 OR PART OF GROUP 87(DA) IS MANUFACTURED IN ATLANTA AND SHALL BE ORDERED AS FOLLOWS:
(ONE) (LS1A-A 180009185 (DA)) LS1A-SC 106469794 LIGHTGUIDE CABLE INTERCONNECTION EQUIPPED WITH ('X' DIM) (2000A 103884904 (DA)) 9000A3 106704703 LIGHTGUIDE CABLE PER EACH APPLICATION - ORM/HOST. ('X' DIM IS A CUMULATIVE LENGTH OF CABLES JL131 AND JL132. CABLE WILL BE CUT IN TWO AS REQ'D AND STUB END AT THE LGX WILL BE EQUIPPED WITH THE CONNECTOR PER CUSTOMER SPEC).
EXAMPLE:
(ONE) JL131 150 FEET IS REQ'D
(ONE) JL132 150 FEET IS REQ'D
LINE ENGINEER SHALL ORDER:
106469794 LS1A-SC QTY ONE
E/W
106704703 9000A3 QTY 300 FEET

152. 8.3 MICRON LIGHTGUIDE CABLE JL131 & JL132 (WHICH IS MANUFACTURED IN ATLANTA) SHALL BE ORDERED AS FOLLOW:
(TWO) LS1A-A 180009185 LIGHTGUIDE CABLE INTERCONNECTION EQUIPPED WITH ('X' DIM = JL131 & JL132) 2000A 103884904 LIGHTGUIDE CABLE FOR TWO CABLES OF (SPECIFY DIMENSION) EACH.
EXAMPLE:
(ONE) JL131 150 FEET IS REQ'D ('X' DIM)
(ONE) JL132 150 FEET IS REQ'D ('X' DIM)
LINE ENGINEER SHALL ORDER:
180009185 LS1A-A QTY TWO
E/W
103884904 2000A QTY 300 FEET FOR TWO CABLE 150 FEET EACH
WHEN REQUIRED CABLE LENGTH FOR ONE CABLE IS 100 FEET OR LESS, LINE ENGINEER MAY ORDER 'STOCK' CABLE BY COMCODE AS SHOWN BELLOW:

10'	LS1A-A-10	104149224
15'	LS1A-A-15	104149232
20'	LS1A-A-20	104149729
25'	LS1A-A-25	104149240
30'	LS1A-A-30	104149257
35'	LS1A-A-35	104149265
40'	LS1A-A-40	104149687
50'	LS1A-A-50	104149695
75'	LS1A-A-75	104149703
100'	LS1A-A-100	104149711

153. THE CABLE DRESS OF THE 728B COAX CABLE REQUIRES THAT A CABLE STRAIN RELIEF (406114942) BE PLACED NEAR THE 'TRCU' UNIT TERMINATION IN ACCORDANCE WITH DRAWING ED5D500-13, FIG 32A.

---------- CONTINUED ON NEXT SHEET ----------

ENGINEERING NOTES

***** CONTINUED *******

NEAREST AVAILABLE MMSU OR MSU IN THE SHORTEST PATH POSSIBLE.

75. ALL UNUSED MTB PORTS(0-14) LOCATED IN THE MMSU SHALL BE EQUIPPED WITH ED-4C222-30,G14.

76. MTB PORT 15 FOR ALL MTB CIRCUIT PACKS LOCATED IN THE MMSU ARE UNASSIGNABLE.

77. ONE CABLE ASSEMBLY IS REQUIRED FOR EACH PORT.

78. ONE CABLE ASSEMBLY(G37 OR G38) IS REQUIRED FOR EACH PMU AND ONE CABLE ASSEMBLY(G35 OR G36) IS REQUIRED FOR EACH SN107 IN ACCORDANCE WITH PORT ASSIGNMENT. STAMPING INFORMATION FOR CONNECTORS J1&J2 SHALL BE FURNISHED FOR EVEN NUMBERED PORTS ONLY;(ONE CABLE ASSEMBLY CONTAINS INTERCONNECTIONS FOR TWO DUPLICATED MTB PORTS).

79. THE LETTERS (SWC) IN TABLE A INDICATES A SOLDERLESS WRAPPED CONNECTION.

80. ONE CABLE ASSEMBLY OF GROUP 109A PROVIDES TWO CONSECUTIVE PORTS IN ONE 2 X 6 CONNECTOR IN ONE SERVICE GROUP ONLY (FOR UNIVERSAL SLC 96). SEE TABLE CF1 FOR ASSIGNMENTS.

81. A METALLIC TEST BUS (MTB) IS REQUIRED FOR EACH TEST BUS CONTROL CIRCUIT WHEN AN INTERGRATED SLC-96 IS PROVIDED WITHIN TEST RANGE. EACH BUS CAN SERVE UP TO TEN COLOCATED REMOTE TERMINALS.

82. THE A25B AND A25W CONNECTORIZED CABLE ASSEMBLIES LISTED IN THE STOCKLIST OF THIS DRAWING SHOULD NOT BE ORDERED BY GROUP NUMBER,BUT AS CABLE CODE NUMBER IN THE FORMED CABLE SPECIFICATION. LINE ENGINEER PROVIDES 'X' DIMENSION IN THE FORMED CABLE SPECIFICATION.

83. WHEN ED5D500-21 G122A OR G123A IS SPECIFIED FOR A SN560 TLTT CP (TAIWAN LINE TEST TRUNK) INSTALLED IN ANY OF POS 032 THRU 180 IN THE ANALOG TRUNK UNIT-EXPORT, CONNECTOR ASSOCIATED WITH THAT POSITION IN CABLE JR102 OR JR102A SHALL BE TIED BACK TO THE MAIN ARM OF THE CABLE AND CONNECTOR PROVIDED WITH THE CABLE JR33A (G122A PORT 0-7) OR JR34A (G123A PORT 8-14) SHALL BE INSERTED.

84. PROVIDE FIBER OPTIC CABLE DRESS SPOOLS FOR EXCESS CABLE IN ACCORDANCE WITH ED-5D518-10.

85. A SINGLE DLTU-E CAN SUPPLY ONLY 4 DUPLEX T1 BALANCED SIGNALS (4 TO SIDE 0, 4 TO SIDE 1). ADDITIONAL T1'S, IF NEEDED, REQUIRE ORDERING ADDITIONAL DLTU-E'S.

86. WHEN ED-5D500-21,G124 OR G125 IS SPECIFIED FOR A TEST TRUNK CIRCUIT PACK (SN107) INSTALLED IN POS 008 THRU 178 IN THE TRUNK UNIT, CONNECTOR ASSOCIATED WITH THAT POSITION IN CA JR102 OR JR102A SHALL BE TIED BACK TO THE MAIN ARM OF THE CABLE, AND CONNECTOR PROVIDED WITH THE CABLE JR35 (G124 PORT 0-7) OR JR36 JR36 (G125 PORT 8-14) SHALL BE INSERTED.

87. 4A CABLE CONNECTOR RETAINER 103222576 SHIPPED LOOSE WITH THE UNIT IS USED TO SECURE THE KS-16689 CONNECTOR OF THE CABLE TO THE BRACKET.

88. WHEN EARLY MDF LU ACCESS IS REQUIRED, TWO RECEPTACLE ASSEMBLIES (711RAD1-64 WHITE MANDRELS ID# 103044103) ARE REQUIRED PER ONE 711 CONNECTORIZED BLOCK.

89. TWO ED5D500-21 GROUPS 85A CABLES ARE REQUIRED FOR EACH ORM APPLICATION. (ONE PER HOST OFFICE AND ONE PER REMOTE SITE).

90. THIS CABLE IS NOT PROVIDED WITH STAMPING INFORMATION (SUCH AS EQL, TERM ETC). FOR CONNECTING PURPOSES, INSTALLER SHALL USE METHOD OF CABLING DOCUMENT ED5D500-13,FIG 33 FOR LU2, FIG. 34 FOR LU3, FIG. 44 FOR LU4, FIG. 35 FOR TU AND FIG. 36 FOR RESISTOR PANEL (END 'A') AND FIG. 37,37A AND 38 ('B' END).

92. DROP LENGTHS SUCCEEDED BY /R/ ARE FOR LINE-UP CABLE RACK APPLICATIONS. DROP LENGTHS SUCCEEDED BY /P/ ARE FOR 'PALLETIZED' OR 'RAISED FLOOR' APPLICATIONS. DIMENSIONS FOR 'PALLETIZED' OR 'RAISED FLOOR' VERSION ARE BASED ON 1 FOOT DROP FROM THE BASE OF THE CABINET. ALL OTHER APPLICATIONS HAVE TO BE ADJUSTED ACCORDINGLY.

93. DUE TO A VARIATION OF PANELS EQUIPPED ON DSX3, G85A OR G86A PROVIDES ONLY A STUB CABLE FOR DSX3 END. TYPE OF CONNECTOR HAS TO BE IDENTIFIED AND MATING CONNECTOR SHALL BE ORDERED FROM THE FOLLOWING TABLE. INSTALLER SHALL ASSEMBLE THE CABLE USING A PROPER TOOL.

DSX3 PNL CONNECTOR	CABLE MATING CONNECTOR
KS20864L15	KS20863L14

------ CONTINUED TO THE LEFT ------

ENGINEERING NOTES

***** CONTINUED *******

|80B |RSM (MULTI-MOD) RCU-BSRF MAX 200' |

52. FOR INTRACABINET CONTROL,DATA AND POWER CABLING INFORMATION SEE ED-5D500-10 OR ED-5D500-20.

53. THE LETTERS(L) OR (R) WHICH APPEAR IN THE CABLE TABLE DESIGNATE THE LOCATION OF THE CABLE AT THE LEFT OR RIGHT UPRIGHT RESPECTIVELY FACING THE FRONT OF THE CABINET. THE LETTER 'M' DENOTES CABLES THAT WATERFALL OFF THE CABLE RACK AT VARIOUS LOCATIONS ALONG THE CABINET.

54. FOR TERMINATION OF CONNECTORIZED CABLE ASSEMBLIES, METHOD OF RUNNING CABLES AND FOR ANY VARIABLE CABLE DROP LENGTH INFORMATION SEE THE METHOD OF CABLING DRAWINGS LISTED IN DIR, CABLE MEASUREMENT TABLES, FIG. A() AND SKETCHES INCLUDED HEREIN.

55. THE ENGINEER SHALL SPECIFY AN 'X' DIMENSION FOR THE VARIABLE LENGTH CABLES IN THE JOB SPECIFICATION. THE 'X' DIMENSION CONSISTS OF THE DROP DIMENSIONS FROM THE CABLE RACK TO THE CABINETS OR EQUIPMENT AT BOTH ENDS OF THE CABLE RUN AND INCLUDES THE DISTANCE IN THE CABLE RACK BETWEEN THE TWO DROP OFF POINTS. THE DROP DIMENSIONS SHOWN HEREIN ARE THE LENGTH OF CABLE, INCLUDING THE CONNECTING INCREMENT FROM THE CABLE LINE OF THE CABLE RACK, OR FROM THE LIP OF THE CABLE RACK SHIELD TO THE FARTHEST COMPONENT TO WHICH THE CABLE CONNECTS.

56. ENGINEER WILL SPECIFY VARIABLE STAMPING INFORMATION AS REQUIRED. NORMALLY THIS WILL CONSIST OF CABINET NAME AND NUMBER AND A VERTICAL EQL NUMBER CONSISTING OF 3 DIGITS. THE SHOP WILL STAMP THE FIXED INFORMATION FROM THE ASSOCIATED TCED DRAWING.

57. INDICATES() DESIGNATIONS TO BE STAMPED IN ACCORDANCE WITH JOB INFORMATION .

58. INDICATES'/// DESIGNATIONS FOR REFERENCE ONLY AND DOES NOT HAVE TO BE STAMPED ON THE CONNECTOR.

59. THESE CABLES ARE ORDERED AS BULK CABLE IN THE JOB SPECIFICATION PER OFFICE REQUIREMENTS.

60. THIS 8,3 MICRON FO CABLE IS MANUF IN ATLANTA. SYMBOL 'S' SHOWN IN SYMBOL COLUMN OF THE SL ITEM 2255 AND 2260 SHALL NOT BE SHOWN ON THE SOURCE & EDIT MASTER.

62. RESERVED.

63. RESERVED.

64. CONNECTORIZED OR NON-CONNECTORIZED 89 TYPE OR 112 TYPE,ETC.,DF BLOCKS PER FIG.A() SHALL BE ORDERED IN BULK QUANTITIES AS REQUIRED.

65. STAMPING INFORMATION FOR DF BLOCKS SHALL BE PROVIDED IN ACCORDANCE WITH ED-5D025-12,-13.

66. CONNECT THE LIGHTGUIDE CABLE IN ACCORDANCE WITH ED-5D500-13.

67. SHORT TERM BENDING TO A RADIUS OF LESS THAN 1-1/2 INCHES DURING HANDLING OR INSTALLATION IS NOT DETRIMENTAL, BUT PULLING LIGHTGUIDE CABLE TIGHT OVER SHARP CORNERS OR OVER RIGHT ANGLE BENDS SHOULD BE AVOIDED. REASONABLE CARE SHOULD BE EXERCISED WHEN LACING, TYING OR SECURING LIGHTGUIDE SO THAT IMPRESSIONS ARE NOT FORMED IN THE CABLES.

68. ONLY ONE MSU OR MMSU CAN BE EQUIPPED IN ANY ONE CABINET, DUE TO CABLE CONGESTION.

69. RESERVED.

70. ONE 128 PAIR DF BLOCK IS REQUIRED FOR UP TO FOUR 13A RECORDED ANNOUNCEMENT UNITS.

71. OMIT CONNECTORIZED CABLES ZA24,ZA25,ZA26,ZA28A,ZA28B & ZA28C (ED-4C410-35,G10,10A,10B,10E,10F & 10G) FURNISHED WITH 3B PROCESSOR.

73. MMSU CABLING REQUIREMENTS FOR PERIPHERAL UNITS LOCATED IN THE SAME LTP ARE SHOWN ON ED-5D500-10 OR ED-5D500-20 OR ED5D651-26.

74. THE METALLIC TEST INTERCONNECT BUS (MTIB) SHALL BE RUN TO THE

------ CONTINUED TO THE LEFT ------

COPYRIGHT @ 2001 LUCENT TECHNOLOGIES
ALL RIGHTS RESERVED

BT13

INTERCABINET CABLING
FOR
5ESS * SWITCH
*LUCENT TRADEMARK

DWG SIZE C2 | ISSUE 117

PRINTED IN U.S.A.

TABLE A-FEATURES

EQUIPMENT				EQUIPMENT OR CIRCUIT DATA					SD EQUIVALENT		
DESCRIPTION	REF NOTE	RAT-ING	LIST OR GROUP	QTY	EQUIPMENT OR CIRCUIT	L/G OR FIG	WRG	APP	SCHEMATIC	FIG	OPT
62.5 MICRON LIGHTGUIDE CABLE ASSEMBLIES REQUIRED FOR EACH SWITCHING MODULE IN MULTI-MOD OFFICE WHEN SMC IS E/W MCTU J5D003EC CONNECTED TO CM1 (TMSU). (SEE TBL E1 FOR PORT ASSIGNMENT AND TBL BD AND BE FOR DROP DIM ON TMSU). (982TR & 982TS TYPE CONN).(DO NOT ORDER FOR JOBS SCHEDULED TO SHIP AFTER 11/24/90). DA EFF:08/20/91 FE:ED5D500-21,G12		DA	4								
62.5 MICRON LIGHTGUIDE CABLE ASSEMBLIES REQUIRED FOR EACH SWITCHING MODULE IN MULTI-MOD OFFICE WHEN SMC IS E/W MCTU2 J5D003LA CONNECTED TO A CM1 (TMSU). (SEE TBL E1 FOR PORT ASSIGNMENT, SEE TBL BD AND BE FOR DROP DIM ON TMSU). (982TR & 982TS TYPE CONN).(DO NOT ORDER FOR JOBS SCHEDULED TO SHIP AFTER 11/24/90). DA EFF:08/20/91 FE:ED5D500-21,G12A		DA	4A								
50 MICRON FIBER OPTIC LIGHTGUIDE CABLE ASSEMBLIES REQUIRED FOR EACH SWITCHING MODULE IN MULTI-MOD OFFICE WHEN SMC IS E/W MCTU2 (J5D003LA) CONNECTED TO CM1. SEE TBL CA FOR PORT ASGNT, TBL BD,BE FOR DROP DIM AT CM1.	199		4B								
62.5 MICRON LIGHTGUIDE CABLE ASSEMBLIES REQUIRED FOR A TMS CABINET CONNECTED TO A MSG E/W MICU2 (J5D006ED). FIBER OPTIC ODL50. (982TR & 982TS TYPE CONN).(DO NOT ORDER FOR JOBS SCHEDULED TO SHIP AFTER 11/24/90). DA EFF:08/20/91 FE:ED5D500-21,G12B		DA	4C								
50 MICRON FIBERT OPTIC LIGHT-GUIDE CABLE ASSEMBLIES REQUIRED FOR EACH SWITCHING MODULE IN MULTI-MOD OFFICE WHEN SMC IS E/W MCTU (J5D003EC) (SEE TBL AA & FIG. M2 FOR SINGLE FABRIC OR TBL AB AND FIG. M3 FOR DUAL FABRIC (FOR C.O. E/W CM2 ONLY). (SEE NOTE 96). DA EFF:08/31/98 FE/RA:NONE	199	DA	5A								
50 MICRON FIBER OPTIC LIGHT-GUIDE CABLE ASSEMBLIES REQUIRED FOR EACH SWITCHING MODULE IN MULTI-MOD OFFICE WHEN SMC IS E/W MCTU2 (J5D003LA). SEE TBL AA AND FIG. M2 FOR SINGLE FABRIC OR TBL AB,AB1 AND FIG. M3 FOR DUAL FABRIC). SEE NOTE 96. DA EFF:08/31/98 FE/RA:NONE	199	DA	5B								
FIBER OPTIC LIGHTGUIDE CABLE ASSEMBLIES, REQUIRED FOR EACH TRM (2MI) TO CONNECT NCT LINKS FROM MCTU (J5D003EC) TO A LSCIM, LSCIT OR LGX (FOR TRM APPL). (SEE TBL AE AND FIG. P). DA EFF:08/31/98 FE/RA:NONE	199	DA	6								

TABLE-A CONTINUED

ENGINEERING NOTES

***** CONTINUED *******

50 FT ED5D621-35,G147C

163. FOR EMC COMPLIANT (CLEAN DUCT) OFFICES THESE CABLES MUST BE RUN IN SHIELD 3.

199. GROUPS WHICH REFERENCE THIS NOTE NO LONGER HAVE A STOCKLIST ITEM AND THE CABLE MUST BE ORDERED USING MISC TABLE T.

ENGINEERING NOTES

***** CONTINUED *******

154. REFERENCE TBL FOR 'PRECONDITIONED OFFICES' CABLE GROUPS FOR 'ADVANCED' VS 'OFFICIAL' VERSION:

ORDERING/PARENT DOC		ASSEMBLY/CHILD DOC	
OFFICIAL ED5D500-21	ADVANCED ED5D500-21	OFFICIAL ED5D503-32	ADVANCED ED5D503-32
G 330X	130X1	G 341X	301X1
		G 342X	303X1
G 331X	130X2	G 343X	301X2
		G 344X	303X2
G 332X	130X3		
G 333X	130X4		
G 345X	145X1	G 345X	305X1
		G 346X	306X1
G 346X	145X2	G 347X	305X2
		G 348X	306X2

155. THESE CABLES CAN BE COMBINED INTO ONE 26GA CABLE TO EQUIP UP TO ONE MUSIC ON QUEUE (J1A033GR-1) AND TWO MUSIC OR SILENCE ON QUEUE (J1A033GU-1) UNITS FOR A MAX OF 66 CIRCUITS (66 PR).

156. ONE 812A CABLE WILL EQUIP TWO MUSIC OR SILENCE ON QUEUE (J1A033GU-1) UNITS (1 PR FOR EACH UNIT).

157. IF THE MFFU (J5D003FJ) PRECEDES AN OLDER TYPE F/F, AU2 (J5D003AU-2), WITHIN A MMRSM OR A CO-LOCATED ORM/TRM THE GRP 193B CABLE CAN BE USED BY REVERSING THE FROM (PREC) AND THE TO (SUCC) CONNECTING ENDS (EQL & TERM). THE END CONNECTING TO THE MFFU IS E/W HEAT SHRINK TUBING.

158. THIS CABLE MAY ALSO BE ORDERED IN THE FOLLOWING LENGTHS:
103895660 - 10FT. (3.0M)
103796678 - 25FT. (7.6M)
103796710 - 75FT. (22.8M)
103895678 - 100FT. (30.4M)

159. WHEN THE TN4011 PACK IS SPECIFIED FOR DIGITAL CLOCK SOURCE (DCS) 64KBPS SIGNAL CERTAIN LENGTH EXCEPTIONS WILL APPLY. THE 26AWG CABLE(1249) WILL BE RESTRICTED TO A MAXIMUM LENGTH OF 722 FT.(220 METERS) AND THE 22AWG CABLE(600) WILL BE RESRICTED TO A MAXIMUM LENGTH OF 1149 FT.(350 METERS).GROUPS 350,351,353 AND 354 ARE RESTRICTED TO 722 FT.(220 METERS) AND GROUPS 350A,351A,352,353A, 354A AND 355 ARE RESTRICTED TO 1149 FT.(350 METERS).HARDWARE DESIGNERS JOHN JENSON AND FRANK REVELES HAVE DEVELOPED AND TESTED THE MENTIONED RESTRICTIONS TO ENSURE ENOUGH CABLE LOSS MARGIN IS PRESENT SO THAT THE 64KBPS SIGNAL AT THE RECEIVING END HAS THE APPROPRIATE CHARACTERISTICS SUCH AS VOLTAGE AND WAVESHAPE ETC. TO ACCOMODATE THE RECEIVING EQUIPMENT.

160. CABLE LENGTH MUST BE SPECIFIED BY THE CUSTOMER.

161. THE LINE ENGINEER SHALL PROVIDE CABLE IDENT(IF REQUIRED),TERMINAL AND EQL STAMPING INFORMATION. SEE TABLES ST, STA, AND STB FOR CA IDENT, TERMINAL EQL AND DEVICE CODE ASSIGNMENTS. FOR PERIPHERAL CONTROLLER CIRCUIT PACK TO CABLE CROSS REFERENCE SEE TABLE STC.

162. ED5D621-35,GROUP 147B CONNECTORIZED CABLE ASSEMBLY LISTED IN THE STOCKLIST OF THIS DRAWING IS FOR A LENGTH OF 25 FT(*). IF ANOTHER LENGTH IS REQUIRED,SUBSTITUTE ONE OF THE FOLLOWING:

LENGTH	GROUP NUMBER
7 FT	ED5D621-35,G147A
25 FT(*)	ED5D621-35,G147B(*)

------ CONTINUED TO THE LEFT ------

COPYRIGHT @ 2001 LUCENT TECHNOLOGIES
ALL RIGHTS RESERVED

BT13

INTERCABINET CABLING
FOR
5ESS * SWITCH
*LUCENT TRADEMARK

DWG SIZE C2 | ISSUE 117

PRINTED IN U.S.A.

TABLE A-FEATURES(CONTINUED)

EQUIPMENT				EQUIPMENT OR CIRCUIT DATA					SD EQUIVALENT		
DESCRIPTION	REF NOTE	RAT-ING	LIST OR GROUP	QTY	EQUIPMENT OR CIRCUIT	L/G OR FIG	WRG	APP	SCHEMATIC	FIG	OPT
FIBER OPTIC LIGHTGUIDE CABLE ASSEMBLIES REQUIRED FOR EACH TRM (2MI) TO CONNECT NCT LINKS FROM MCTU2 (J5D003LA) TO LSCIM, LSCIT OR LGX. (SEE TBL AD2,AE AND FIG. M4 FOR SINGLE FABRIC, SEE TBL AD2,AE1,AE2 AND FIG. M5 FOR DUAL FABRIC). SEE NOTE 96. DA EFF:08/31/98 FE/RA:NONE	199	DA	6B								
FIBER OPTIC LIGHTGUIDE CABLE ASSEMBLIES REQUIRED IN ADDITION TO GROUP 6, TO CONNECT NCT LINKS FROM TMSU TO LSCIM OR LSCIT (FOR TRM APPL). THIS GROUP IS ALSO REQUIRED FOR LSM SHARING CP ON CM2 DUAL FABRIC WITH TRM. SEE NOTE 96. (SEE TBL AE FOR CM2 SGL FAB). (SEE TBL AE1 OR AE2 FOR CM2 DUAL FAB). DA EFF:08/31/98 FE/RA:NONE	199	DA	7								
50 MICRON FIBER OPTIC LIGHT-GUIDE CABLE ASSEMBLIES REQUIRED WHEN TRCU (J5D003ED-1), L1 OR TRCU2 (J5D003ED-2),L3 IS SPECIFIED AND OFFICE IS E/W CM2. (HOST OFFICE ONLY E/W 1 REMOTE SITE). SEE TBL AC (SINGLE FABRIC) OR TBL AD (DUAL FABRIC) FOR PORT ASSGNMT. DA EFF:08/31/98 FE/RA:NONE	199	DA	8A								
62.5 MICRON LIGHTGUIDE CABLE ASSEMBLIES REQUIRED FOR TRCU2 J5D003ED-2 EQUIPPED WITH L3 OR L4 (ONE GROUP 8B FOR EACH) WHEN OFFICE IS E/W CM1. (SEE TBL E3 FOR PORT ASGNT AND TBL BD AND BE FOR DROP DIM ON TMSU). (HOST OFFICE ONLY). (982TR & 982TS TYPE CONN).(DO NOT ORDER FOR JOBS SCHEDULED TO SHIP AFTER 11/24/90). DA EFF:08/20/91 FE:ED5D500-21,G12C		DA	8B								
62.5 MICRON LIGHTGUIDE CABLE ASSEMBLIES REQUIRED FOR TRCU2 J5D003ED-2 EQUIPPED WITH L3 OR L4 (ONE GROUP 8C FOR EACH) WHEN OFFICE IS E/W CM2. (SEE TBL H4 SINGLE FAB, H5 DUAL FAB ODD SM, H6 DUAL FAB EVEN SM PORT ASGNT. SEE TBL BW SINGLE FAB OR TBL BX() DUAL FAB FOR DROP DIM ON CM2). (HOST OFFICE ONLY). (982TR & 982TS TYPE CONN).(DO NOT ORDER FOR JOBS SCHEDULED TO SHIP AFTER 11/24/90). DA EFF:08/20/91 FE:ED5D500-21,G12D		DA	8C								
62.5 MICRON LIGHTGUIDE CABLE ASSEMBLIES REQUIRED FOR TRCU1 J5D003ED-1 EQUIPPED WITH LIST 1 OR 2 (ONE GROUP 8D FOR EACH) AND OFFICE IS E/W CM1. (SEE TBL E2 FOR PORT ASGNT, AND TBL BD AND BE FOR DROP DIM ON TMSU). (HOST OFFICE ONLY). (982TR & 982TS TYPE CONN).(DO NOT ORDER FOR JOBS SCHEDULED TO SHIP AFTER 11/24/90). DA EFF:08/20/91 FE:ED5D500-21,G12E		DA	8D								

TABLE-A CONTINUED

TABLE A-FEATURES(CONTINUED)

EQUIPMENT				EQUIPMENT OR CIRCUIT DATA					SD EQUIVALENT		
DESCRIPTION	REF NOTE	RAT-ING	LIST OR GROUP	QTY	EQUIPMENT OR CIRCUIT	L/G OR FIG	WRG	APP	SCHEMATIC	FIG	OPT
62.5 MICRON LIGHTGUIDE CABLE ASSEMBLIES REQUIRED FOR TRCU1 J5D003ED-1 EQUIPPED WITH LIST 1 OR 2 (ONE GROUP 8E FOR EACH) AND OFFICE IS E/W CM2. (SEE TBL H1 SINGLE FAB, H2 DUAL FAB ODD SM, H3 DUAL FAB EVEN SM FOR PORT ASGNT.SEE TBL BW SINGLE FAB AND TBL BX() FOR DUAL FAB FOR DROP DIM ON CM2). (HOST OFFICE ONLY). (982TR & 982TS TYPE CONN).(DO NOT ORDER FOR JOBS SCHEDULED TO SHIP AFTER 11/24/90). DA EFF:08/20/91 FE:ED5D500-21,G12F		DA	8E								
50 MICRON FIBER OPTIC LIGHTGUIDE CABLE ASSEMBLIES REQUIRED IN ADDITION TO GROUP 8A, WHEN TRCU (J5D003ED-1),L2 OR TRCU2 (J5D003ED-2),L4 IS SPECIFIED. (HOST OFFICE ONLY E/W 2ND REMOTE SITE). SEE TBL AC (SINGLE FABRIC) OR TBL AD-1 (DUAL FABRIC) FOR PORT ASGNMT. DA EFF:08/31/98 FE/RA:NONE	199	DA	9A								
62.5 MICRON LIGHTGUIDE CABLE ASSEMBLIES REQUIRED FOR EACH SWITCHING MODULE IN MULTI-MOD OFFICE WHEN SMC IS E/W MCTU J5D003EC CONNECTED TO A CM2. (SEE TBL F1 SINGLE FAB, F2 DUAL FAB ODD SM, F3 DUAL FAB EVEN SM PORT ASGNT. SEE TBL BW SINGLE-FAB, BX() DUAL FAB FOR DROP DIM ON CM2). (982TR & 982TS TYPE CONN).(DO NOT ORDER FOR JOBS SCHEDULED TO SHIP AFTER 11/24/90). DA EF:08/20/91 FE:ED5D500-21,G12G		DA	10								
62.5 MICRON LIGHTGUIDE CABLE ASSEMBLIES REQUIRED FOR EACH SWITCHING MODULE IN MULTI-MOD OFFICE WHEN SMC IS E/W MCTU2 J5D003LA CONNECTED TO A CM2. (SEE TBL F1 SINGLE FAB, F2 DUAL FAB ODD SM, F3 DUAL FAB EVEN SM PORT ASGNT. SEE TBL BW SINGLE FAB, BX() DUAL FAB FOR DROP DIM ON CM2). (982TR & 982TS TYPE CONN).(DO NOT ORDER FOR JOBS SCHEDULED TO SHIP AFTER 11/24/90). DA EFF:08/20/91 FE:ED5D500-21,G12H		DA	10A								

TABLE-A CONTINUED

COPYRIGHT @ 2001 LUCENT TECHNOLOGIES
ALL RIGHTS RESERVED

BT13

INTERCABINET CABLING
FOR
5ESS * SWITCH
*LUCENT TRADEMARK

DWG SIZE C2 | ISSUE 117

LUCENT TECHNOLOGIES INC | ED5D500-21 | SHEET A10 OF 292

PRINTED IN U.S.A.

TABLE A-FEATURES(CONTINUED)

EQUIPMENT DESCRIPTION	REF NOTE	RAT-ING	LIST OR GROUP	EQUIPMENT OR CIRCUIT DATA QTY	EQUIPMENT OR CIRCUIT	L/G OR FIG	WRG	APP	SD EQUIVALENT SCHEMATIC	FIG	OPT
62.5 MICRON LIGHTGUIDE CABLE ASSEMBLIES (FOR 982TRA AND 982TSA TYPE CONNECTORS) REQUIRED FOR EACH SWITCHING MODULE IN MULTI-MOD OFFICE WHEN SMC IS E/W MCTU J5D003EC CONNECTED TO CM1 (TMSU). (SEE TBL E1 FOR PORT ASSIGNMENT AND TBL BD AND BE FOR DROP DIM ON TMSU). REPLACES GR 4, TO BE USED ON ALL NEW ORDERS. DA EFF:03/06/00 FE:ED5D872-11,G4		DA	12								
62.5 MICRON LIGHTGUIDE CABLE ASSEMBLIES (FOR 982TRA AND 982TSA TYPE CONNECTORS) REQUIRED FOR EACH SWITCHING MODULE IN MULTI-MOD OFFICE WHEN SMC IS E/W MCTU2 J5D003LA CONNECTED TO CM1 (TMSU). (SEE TBL E1 FOR PORT ASSIGNMENT, SEE TBL BD AND BE FOR DROP DIM ON TMSU). REPLACES GR 4A TO BE USED ON ALL NEW ORDERS. DA EFF:09/30/99 FE:ED5D872-11,G5		DA	12A								
62.5 MICRON LIGHTGUIDE CABLE ASSEMBLIES (FOR 982TRA AND 982TSA TYPE CONNECTORS) REQUIRED FOR A TMS CABINET CONNECTED TO A MSG E/W MICU2 (J5D006ED). FIBER OPTIC ODL50. REPLACES GR 4C, TO BE USED ON ALL NEW ORDERS. DA EFF:09/30/99 FE:ED5D872-11,G6		DA	12B								
62.5 MICRON LIGHTGUIDE CABLE ASSEMBLIES (FOR 982TRA AND 982TSA TYPE CONNECTORS) REQUIRED FOR TRCU2 J5D003ED-2 EQUIPPED WITH L3 OR L4 (ONE GROUP 12C FOR EACH) WHEN OFFICE IS E/W CM1. (SEE TBL E3 FOR PORT ASGNT AND TBL BD AND BE FOR DROP DIM ON TMSU). (HOST OFFICE ONLY). REPLACES GR 8B, TO BE USED ON ALL NEW ORDERS. DA EFF:09/30/99 FE:ED5D872-11,G7		DA	12C								
62.5 MICRON LIGHTGUIDE CABLE ASSEMBLIES (FOR 982TRA AND 982TSA TYPE CONNECTORS) REQUIRED FOR TRCU2 J5D003ED-2 E/W L3 OR L4 (ONE GROUP 12D FOR EACH) WHEN OFFICE IS E/W CM2. (SEE TBL H4 SINGLE FAB, H5 DUAL FAB ODD SM, H6 DUAL FAB EVEN SM PORT ASGNT. SEE TBL BW SIGNAL FAB OR TBL BX() DUAL FAB FOR DROP DIM ON CM2). (HOST OFFICE ONLY). REPLACES GR 8C, TO BE USED ON ALL NEW ORDERS. DA EFF:09/30/99 FE:ED5D872-11,G8		DA	12D								
62.5 MICRON LIGHTGUIDE CABLE ASSEMBLIES (FOR 982TRA AND 982TSA TYPE CONNECTORS) REQUIRED FOR TRCU1 J5D003ED-1 E/W L1 OR L2 (ONE GROUP 12E FOR EACH) AND OFFICE IS E/W CM1. (SEE TBL E2 FOR PORT ASGNT, AND TBL BD AND BE FOR DROP DIM ON TMSU). (HOST OFFICE ONLY). REPLACES GR 8D, TO BE USED ON ALL NEW ORDERS. DA EFF:09/30/99 FE:ED5D872-11,G9		DA	12E								

TABLE-A CONTINUED

TABLE A-FEATURES(CONTINUED)

EQUIPMENT DESCRIPTION	REF NOTE	RAT-ING	LIST OR GROUP	EQUIPMENT OR CIRCUIT DATA QTY	EQUIPMENT OR CIRCUIT	L/G OR FIG	WRG	APP	SD EQUIVALENT SCHEMATIC	FIG	OPT
62.5 MICRON LIGHTGUIDE CABLE ASSEMBLIES (FOR 982TRA AND 982TSA TYPE CONNECTORS) REQUIRED FOR TRCU1 J5D003ED-1 E/W L1 OR L2 (ONE GROUP 12F FOR EACH) AND OFFICE IS E/W CM2. (SEE TBL H1 SINGLE FAB, H2 DUAL FAB ODD SM, H3 DUAL FAB EVEN SM FOR PORT ASGNT, (SEE TBL BW SINGLE FAB AND TBL BX() FOR DUAL FAB FOR DROP DIM ON CM2). (HOST OFFICE ONLY). REPLACES GROUP 8E, TO BE USED ON ALL NEW ORDERS. DA EFF:09/30/99 FE:ED5D872-11,G10		DA	12F								
62.5 MICRON LIGHTGUIDE CABLE ASSEMBLIES (FOR 982TRA AND 982TSA TYPE CONNECTORS) REQUIRED FOR EACH SWITCHING MODULE IN MULTI-MOD OFFICE WHEN SMC IS E/W MCTU J5D003EC CONNECTED TO A CM2. (SEE TBL F1 SINGLE FAB,F2 DUAL FAB ODD SM,F3 DUAL FAB EVEN SM PORT ASGNT. SEE TBL BW SINGLE-FAB, BX() DUAL FAB FOR DROP DIM ON CM2). REPLACES GROUP 10, TO BE USED ON ALL NEW ORDERS. DA EFF:09/30/99 FE:ED5D872-11,G11		DA	12G								
62.5 MICRON LIGHTGUIDE CABLE ASSEMBLIES (FOR 982TRA AND 982TSA TYPE CONNECTORS) REQUIRED FOR EACH SWITCHING MODULE IN MULTI-MOD OFFICE WHEN SMC IS E/W MCTU2 J5D003LA CONNECTED TO A CM2. (SEE TBL F1 SINGLE FAB, F2 DUAL FAB ODD SM, F3 DUAL FAB EVEN SM PORT ASGNT. SEE TBL BW SINGLE FAB, BX() DUAL FAB FOR DROP DIM ON CM2). REPLACES GROUP 10A, TO BE USED ON ALL NEW ORDERS. DA EFF:09/30/99 FE:ED5D872-11,G12		DA	12H								
62.5 MICRON LIGHTGUID CABLE ASSEMBLIES REQUIRED FOR 2(TWO) DUPLICATED LINK FROM A SWITCHING MODULE IN MULTI-MOD OFFICE WHEN SMC IS E/W TSIU4(J5D003NB-1) OR TSIU4-2(J5D003NB-2) CONNECTED TO A CM2. FOR TSIU4 (3NB-1) SEE TBL F5 (SINGLE FAB) F4 (DUAL FAB). FOR TSIU4 (3NB-2) SEE TBL N5 (SINGLE FAB) N4 (DUAL FAB). SEE FIG 8M FOR BOTH SINGLE AND DUAL FAB. DA EFF:03/06/00 FE:ED5D872-11,G1		DA	13								

TABLE-A CONTINUED

COPYRIGHT @ 2001 LUCENT TECHNOLOGIES
ALL RIGHTS RESERVED

BT13

INTERCABINET CABLING
FOR
5ESS * SWITCH
*LUCENT TRADEMARK

DWG SIZE C2 | ISSUE 117

LUCENT TECHNOLOGIES INC | ED5D500-21 | SHEET A11 OF 292

PRINTED IN U.S.A.

TABLE A-FEATURES(CONTINUED)

EQUIPMENT				EQUIPMENT OR CIRCUIT DATA					SD EQUIVALENT		
DESCRIPTION	REF NOTE	RAT-ING	LIST OR GROUP	QTY	EQUIPMENT OR CIRCUIT	L/G OR FIG	WRG	APP	SCHEMATIC	FIG	OPT
62.5 MICRON LIGHTGUIDE CABLE ASSEMBLIES REQUIRED FOR EACH TMUX EQUIPPED IN THE DNU-S TO PROVIDE A PCT (2 DUPLICATED LINKS) TO INTERCONNECT FROM THE DNU-S TO THE TSIU4 (J5D003NB-1) OR TSIU4-2 (J5D003NB-2) FOR DNU-S LOCATED OUTSIDE THE 5ESS AREA ONLY). DA EFF:03/06/00 FE:ED5D872-11,G3		DA	14								
62.5 MICRON LIGHTGUIDE CABLE ASSEMBLIES (FOR 982TRC AND 982TSC TYPE CONNECTORS) REQUIRED FOR EACH SWITCHING MODULE IN MULTI-MOD OFFICE WHEN SMC IS E/W MCTU3 (J5D003LB) CONNECTED TO A CM2. (SEE TBL F1 SINGLE FAB, F2 DUAL FAB ODD SM, F3 DUAL FAB EVEN SM PORT ASGNT. SEE TBL BW SINGLE FAB, BX() DUAL FAB FOR DROP DIM ON CM2). DA EFF:03/06/00 FE:ED5D872-11,G2		DA	15								
62.5 MICRON LIGHTGUIDE CABLE ASSEMBLIES REQUIRED FOR EACH DF2(UN592) EQUIPPED IN THE PSU2 TO PROVIDE PCT LINKS TO INTERCONNECT FROM THE PSU2 TO THE TSIU4(J5D003BN-1) OR TSIU4-2 (J5D003NB-2). SEE TABLE N6(TSIU4-2) OR TABLE N7(TSIU4) FOR SM AND PSU2 PORT. SEE FIG M12. (THIS GROUP IS REPLACED BY ED5D734-10 AND CAB2000) DA EFF:12-24-97 FE:ED5D734-10,GTBLCX-4		DA	17								
CONNECTORIZED SWBD CABLE ASSEMBLIES REQUIRED FOR T1 REFERENCES (1-8) SUPPLIED BY DLTU-E (J5D003BA), WHEN C.O. IS E/W CM2. EXPORT ONLY. SEE NOTE 85. (ONE CKT E/W ANN8B PACK)			18A						SD5D140-01		YX
CONNECTORIZED SWBD CABLE ASSEMBLIES REQUIRED FOR T1 REFERENCES (1-8) SUPPLIED BY DLTU-E (J5D003BA), WHEN C.O. IS E/W CM2. EXPORT ONLY. (DOUBLE CKT E/W ANN103 PACK)			18B						SD5D140-01		YX
CONNECTORIZED SWBD CABLE ASSEMBLIES REQUIRED FOR TI REFERENCES (1-4) SUPPLIED BY DLTU-3(J5D003FN-1),WHEN C.O. IS E/W CM2.			19								
CONNECTORIZED CABLE ASSEMBLIES REQUIRED TO PROVIDE ADDITIONAL SD POINTS FROM PROC CONT CAB (PCCA) TO THE DF FOR MISCELLANEOUS SD USAGE. (SEE FIG. J). RPLCD BY G20A (PC01) AND G20B (PC11).		DA	20								
CONNECTORIZED CABLE ASSEMBLIES REQUIRED TO PROVIDE ADDITIONAL SD POINTS FROM PROCESSOR CONTROL CABINET (PCCA)/(CSPC) TO DF FOR MISCELLANEOUS SD USAGE. PC01 ONLY (SD 0,1,4,5,8,9,12,13,16, 17,20,21,24,25,28,29). (SEE GROUP 20B IF PC11 IS REQD).			20A								
CONNECTORIZED CABLE ASSEMBLIES REQUIRED TO PROVIDE ADDITIONAL SD POINTS FROM PROCESSOR CONTROL CABINET (PCCA)/(CSPC) TO DF FOR MISCELLANEOUS SD USAGE. PC11 ONLY (SD 0,1,2,4,5,8,9,12,13,16, 17,20,21,24,25,28,29). DA EFF:05/07/96 FE:ED5D500-21,G20C REPL:ED5D500-21,G20C		DA	20B								

TABLE-A CONTINUED

TABLE A-FEATURES(CONTINUED)

EQUIPMENT				EQUIPMENT OR CIRCUIT DATA					SD EQUIVALENT		
DESCRIPTION	REF NOTE	RAT-ING	LIST OR GROUP	QTY	EQUIPMENT OR CIRCUIT	L/G OR FIG	WRG	APP	SCHEMATIC	FIG	OPT
CONNECTORIZED CABLE ASSEMBLIES REQUIRED TO PROVIDE ADDITIONAL SD POINTS FROM PROCESSOR CONTROL CABINET (PCCA)/(CSPC) TO DF FOR MISCELLANEOUS SD USAGE. PC11 ONLY (SD 0,1,2,4,5,8,9,12,13,16, 17,20,21,24,25). (NOTE: SD POINT 29 UNAVAILABLE, FIX ASSIGNED TO DEAD SYS ALM. REPL:ED5D500-21 G20B			20C								
CONNECTORIZED SWBD CABLE ASSEMBLY REQUIRED FOR EACH RESISTOR PANEL (0-3) INSTALLED IN A MISCELLANEOUS CABINET CONNECTED TO A DF (E/W 711 CONN) (SEE FIG. A, NOTE 90 AND TBL A1). (89M1AE11-128 DF BLK).			22								
CONNECTORIZED SWBD CABLE ASSEMBLY REQUIRED FOR EACH RESISTOR PANEL (0-3) INSTALLED IN A MISCELLANEOUS CABINET CONNECTED TO A DF (E/W TRW CONN) (SEE FIG. A, NOTE 90 AND TBL A1). (89M1CE21-128 DF BLK).			22B								
CONNECTORIZED SWBD CABLE ASSEMBLY REQUIRED FOR EACH RESISTOR PANEL (0-3) INSTALLED IN A MISCELLANEOUS CABINET CONNECTED TO A DF (E/W 711 CONN) (SEE FIG. A AND NOTE 90). SEE TBL A1 FOR DF BLKS.			23								
CONNECTORIZED SWBD CABLE ASSEMBLY REQUIRED FOR EACH RESISTOR PANEL (0-3) INSTALLED IN A MISCELLANEOUS CABINET CONNECTED TO A DF (SWC) (SEE FIG. A1 AND NOTE 90). SEE TBL A1 FOR DF BLKS.			23A								
CONNECTORIZED SWITCHBOARD CABLE ASSEMBLY REQUIRED PER J86334D-1 PCFD () OR J86334E-1 GPDF ALARM TO A DF WHEN G136E OR 198 IS NOT SPECIFIED. (SEE FIG. J).			24								
BULK SWITCHBOARD CABLE REQUIRED FOR EITHER THE POWER DISTRIBU-TION CONTROL PANEL (ED83024-30, G1A OR G5) OR THE POWER DISTRI-BUTION ALARM PANEL (ED83133-30, G4) EQUIPPED IN M CABINET (J5D005C, L20). RSM APPL ONLY.	199		24A								
CONNECTORIZED SWITCHBOARD CABLE ASSEMBLY REQD FOR A 13A OR 13A+ RECORDED ANNOUNCEMENT UNIT INSTALLED ON THE MISCELLANEOUS CABINET CONNECTED TO A DF E/W 711 CONN (SEE FIG.A).			27								

TABLE-A CONTINUED

COPYRIGHT @ 2001 LUCENT TECHNOLOGIES
ALL RIGHTS RESERVED

TABLE A-FEATURES(CONTINUED)

EQUIPMENT				EQUIPMENT OR CIRCUIT DATA						SD EQUIVALENT		
DESCRIPTION	REF NOTE	RAT-ING	LIST OR GROUP	QTY	EQUIPMENT OR CIRCUIT	L/G OR FIG	WRG	APP	SCHEMATIC	FIG	OPT
BULK SWITCHBOARD CABLE REQD FOR A 13A OR 13A+ RECORDED ANNOUNCEMENT UNIT INSTALLED ON THE MISCELLANEOUS CABINET CONNECTED TO A DF(SWC) (SEE FIG.A1).	199		27A								
BULK SWITCHBOARD CABLE REQUIRED FOR A 14A RECORDED ANNOUNCEMENT UNIT (TRUNK CIRCUIT ARRANGEMENT ONLY) INSTALLED ON THE MISCELLANEOUS CABINET CONNECTED TO A DF (SWC). (SEE FIG. A1).	199		28								
BULK SWITCHBOARD CABLE REQUIRED FOR A 14A RECORDED ANNOUNCEMENT UNIT (LINE CIRCUIT ARRANGEMENT ONLY) INSTALLED ON THE MISCELLANEOUS CABINET CONNECTED TO A DF (SWC). SEE FIG. A1).			28A								
CONNECTORIZED SWITCHBOARD CABLE REQUIRED FOR 15A ANNOUNCEMENT UNIT FOR INTERCONNECTING TO A TRUNK UNIT.	199		28B								
CONNECTORIZED SWITCHBOARD CABLE ASSEMBLY REQUIRED IN ADDITION TO GR28B WHEN REMOTE RECORD CONCENTRATOR OR ANALOG LINE IS SPECIFIED.			28C								
CONNECTORIZED CABLE ASSEMBLY REQ FOR A 16A ANNOUNCEMENT UNIT INSTALLED IN THE MISC CABINET			28D								
BULK SWBD CABLE REQUIRED FOR A 16A ANNOUNCEMENT UNIT	199		28E								
CONNECTORIZED SWITCHBOARD CABLE ASSEMBLY REQUIRED FOR THE INVERTER (20816L1A) ALARM CIRCUIT CONNECTED TO A DF(SWC).		DA	29								
CONNECTORIZED SWBD CABLE ASSEMBLY REQUIRED IN ADDITION TO GROUP 29 FOR ADDITIONAL INVERTER (20816L1A) WHEN T/DC IS SPEC.		DA	29A								
BULK SWITCHBOARD CABLE REQUIRED FOR 2ND INVERTER (WP-91652,L20, 101) MOUNTED IN A MISC CABINET OTHER THAN THE 1ST INVERTER; CONNECTED TO A DF (SWC) OR USED FOR ALARM POINTS WHEN REQUIRED FOR AWS (VCDX) APPLICATIONS ONLY. (NOTE: SCAN POINTS ASSIGNED TO MMSU OFFICE ASSIGNABLE SCAN PTS)	199		29B								
BULK SWITCHBOARD CABLE REQUIRED FOR EXTERNAL SANITY MONITOR (FORMERLY DTDA) REQUIRED FOR MULTI-MOD OFFICES. (NOT REQUIRED FOR OFFICES WITHOUT LINE UNITS).	199		30								
CONNECTORIZED CABLE ASSEMBLIES REQUIRED IN ADDITION TO G30 FOR EXTERNAL SANITY MONITOR (FORMERLY DTDA) REQUIRED FOR MULTI-MOD OFFICES.(SEE RMKS IN CABLING TABLE FOR ENGINEERING ASSIGNMENT AT PCCA WHEN TMS/MSG OR CM2 OR CM2C/CDX IS SPEC). (NOT REQUIRED FOR OFFICES WITHOUT LINE UNITS).			31								
CONNECTORIZED SWITCHBOARD CABLE ASSEMBLY REQUIRED FOR LINK ADAPTER UNIT (LAU) J5D003FG EQUIPPED IN MISC CAB FOR DSL FROM LAU TO DF.			32								

TABLE-A CONTINUED

TABLE A-FEATURES(CONTINUED)

EQUIPMENT				EQUIPMENT OR CIRCUIT DATA						SD EQUIVALENT		
DESCRIPTION	REF NOTE	RAT-ING	LIST OR GROUP	QTY	EQUIPMENT OR CIRCUIT	L/G OR FIG	WRG	APP	SCHEMATIC	FIG	OPT
CONNECTORIZED SWITCHBOARD CABLE ASSEMBLY REQUIRED FOR LINK ADAPTER UNIT (LAU) J5D003FG EQUIPPED IN M CAB. CABLE FROM TERMINAL ADAPTER TO A ONE SYNCHRONOUS DATA SET 9.6KBPS. (HOST), OR TO ME WHEN ST ALONE (API).			33								
CONNECTORIZED SWITCHBOARD CABLE ASSEMBLY REQUIRED FOR ALARM SCAN POINTS FOR THE FIRST FAN UNIT (J5D003BE) MOUNTED IN MISC CAB CONNECTED TO A DF. (NOT FOR REMOTE). (REPLCD DIRECTLY BY GROUP 34CE).		DA	34								
CONNECTORIZED SWITCHBOARD CABLE ASSEMBLY REQUIRED FOR ALARM MULT BETWEEN FAN UNITS (J5D003BE) FOR EACH SUCCEEDING MISC CABINET OR ALARM MULT BETWEEN FAN UNITS FOR EACH SUCCEEDING DATA SET CABINET NOTE:PRECEDING FAN MUST BE A J5D003BE			34A								
CONNECTORIZED SWITCHBOARD CABLE ASSEMBLY REQUIRED FOR ALARM MULT BETWEEN FAN UNITS (J5D003FH) FOR EACH SUCCEEDING MISC CABINET OR ALARM MULT BETWEEN FAN UNITS FOR EACH SUCCEEDING DATA SET CABINET NOTE:PRECEDING FAN CAN BE EITHER J5D003FH OR J5D003BE			34B								
CONNECTORIZED SWITCHBOARD CABLE ASSEMBLY REQUIRED FOR ALARM SCAN POINTS FOR THE FIRST FAN UNIT (J5D003FH) MOUNTED IN MISC CABINET. (REQUIRED FOR REMOTE OFFICE OR HOST E/W CM1.			34C								
CONNECTORIZED SWITCHBOARD CABLE ASSEMBLY REQUIRED FOR ALARM SCAN POINTS FOR THE FIRST FAN UNIT (J5D003FH) MOUNTED IN MISC CABINET OR MOUNTED IN DATA SET CABINET IN A HOST OFFICE E/W CM2.			34D								
CONNECTORIZED CABLE ASSEMBLIES REQUIRED FOR OFFICE ALARM UNIT MOUNTED IN MISC CABINET CONNECTED TO A PROC CONT CAB(PCCA) (FOR C.O. ONLY NOT REQUIRED FOR RSM). (SEE FIG. J). (REPLCD DIRECTLY BE GROUP 35CE).		DA	35								
CONNECTORIZED SWBD CABLE ASSEMBLIES REQUIRED FOR ADDITIONAL AUDIBLE ALARM PANEL (ED-5D141-10,G3) OR AUD/VIS ALM UNIT (NE00312-31,G1) WHEN M CAB IS E/W RARU AUDIBLE. (SEE FIG. J4).			35A								

TABLE-A CONTINUED

COPYRIGHT @ 2001 LUCENT TECHNOLOGIES
ALL RIGHTS RESERVED

BT13

INTERCABINET CABLING
FOR
5ESS * SWITCH
*LUCENT TRADEMARK

DWG SIZE C2 | ISSUE 117

LUCENT TECHNOLOGIES INC | ED5D500-21 | SHEET A13 OF 292

PRINTED IN U.S.A.

TABLE A-FEATURES(CONTINUED)

EQUIPMENT				EQUIPMENT OR CIRCUIT DATA					SD EQUIVALENT		
DESCRIPTION	REF NOTE	RAT-ING	LIST OR GROUP	QTY	EQUIPMENT OR CIRCUIT	L/G OR FIG	WRG	APP	SCHEMATIC	FIG	OPT
CONNECTORIZED CABLE ASSEMBLIES REQUIRED IN ADDITION TO G35CE FROM OAU AND CONV PNL TO AUD ALM PNL OR AUD/VIS ALM UNIT (NOT REQD WHEN RARU PER J5D005C-1,L16 AND LAA IS IS SPECIFIED FOR AUD ALM). (SEE FIG. J OR J1).			35B								
CONNECTORIZED SWBD CABLE ASSEMBLY REQUIRED IN ADDITION TO G35A, WHEN RARU AUD (J5D005CB-1) IS EQUIPPED IN OTHER MISC CAB THAN OAU (J5D005AD). SEE FIG.J4.			35C								
CONNECTORIZED CABLE ASSEMBLY REQUIRED FOR EXIT PILOT LAMP OR A/V ALM PNL (SEE FIG. J OR J1)			36								
BULK SWBD CABLE REQUIRED FOR EXIT PILOT LAMPS (ED-5D141-10, G2) WHEN M CAB IS E/W RARU VIS. (SEE FIG. J4).	199		36A								
CONNECTORIZED SWBD CABLE ASSEMBLY REQUIRED IN ADDITION TO GROUP 36A, WHEN RARU VIS (J5D005CB-1) IS EQUIPPED IN OTHER MISC CAB THAN OAU (J5D005AD). SEE FIG. J4.			36C								
CONNECTORIZED SWITCHBOARD CABLE ASSEMBLY REQUIRED FOR DEAD SYSTEM ALARM (DSA) FROM MISC CABINET E/W OFFICE ALARM UNIT (OAU) TO 3B20D (PCCA-0 & 1) SEE J5D005C-1 (MISC CABINET)			36D								
CONNECTORIZED SWITCHBOARD CABLE ASSEMBLY REQUIRED FOR DEAD SYSTEM ALARM (DSA) FROM MISC CABINET E/W OFFICE ALARM UNIT (OAU) TO 3B21D (CSPC). SEE J5D005C-1 (MISC CABINET)			36E								
CONNECTORIZED SWITCHBOARD CABLE ASSEMBLY REQUIRED TO CONNECT A 201C DATA SET,MOUNTED ON DATA SET CABINET TO A TN75B (MC4C048A-1) CIRCUIT PACK LOCATED IN THE PROC CONT CAB(PCCA) (SEE SD-5D011-01). OR FOR RCVM TO CONNECT PARADYNE MODEM 9600 BPS SYNC MOUNTED ON DSC (J5X099A) TO A TN75C CP IN PCCA. (50FT. MAX).			37								
CONNECTORIZED SWITCHBOARD CABLE ASSEMBLY REQUIRED TO CONNECT A 201C OR 2024 DATA SET,MOUNTED ON DATA SET CABINET TO A TN83 (MC4C041A-1) CIRCUIT PACK LOCATED IN THE PROC CONT CAB(PCCA) (SEE SD-5D011-01).			38								
APPARATUS, WIRING AND ASSEMBLY FOR ONE PERIPHERAL CONTROL CABLE TO CONNECT A 3800 SERIES MODEM OR MCC-ROP OR 577 PRINTER TO A UN583 CP, PROVIDING AN RS232C SCC (SWITCHING CONTROL CENTER) SYNCHRONOUS DATA LINK. (X DIM. 200 FT MAX LENGTH).			38A								
CONNECTORIZED SWITCHBOARD CABLE ASSEMBLY REQUIRED TO CONNECT A KS23996L2 TERMINAL TO A 572 PRINTER (25 FEET). SEE NOTE 162			38B								
CONNECTORIZED SWITCHBOARD CABLE ASSEMBLY REQUIRED TO CONNECT A 202T DATA SET,MOUNTED ON DATA SET CABINET TO A TN74 (MC4C011A-1) CIRCUIT PACK LOCATED IN THE PROC CONT CAB(PCCA) (SEE SD-5D011-01).			39								

TABLE-A CONTINUED

TABLE A-FEATURES(CONTINUED)

EQUIPMENT				EQUIPMENT OR CIRCUIT DATA					SD EQUIVALENT		
DESCRIPTION	REF NOTE	RAT-ING	LIST OR GROUP	QTY	EQUIPMENT OR CIRCUIT	L/G OR FIG	WRG	APP	SCHEMATIC	FIG	OPT
BULK SWITCHBOARD CABLE REQUIRED FOR 4-WIRE LINE CONNECTION FROM RM 3309A MODEM EQPT IN 3000 TYPE GANDALF RACK IN DS CAB TO DF. ONE GROUP PER ONE MODEM. FOR CABLING ALL 14 MODEMS WITH ONE CABLE, SEE GROUP 39B.	199		39A								
BULK SWITCHBOARD CABLE REQUIRED FOR 4-WIRE LINE CONNECTION FROM 3309A MODEM EQPT IN 3000 TYPE GANDALF RACK IN DS CAB TO DF. ONE GROUP FOR 14 MODEMS.	199		39B								
CONNECTORIZED SWBD CABLE ASSEMBLY REQUIRED TO CONNECT 3309 GANDALF DATA SET TO A TN74B CIRCUIT PACK LOCATED IN PCCA. (DSC EXPORT).			39C								
CONNECTORIZED SWBD CABLE ASSEMBLY REQUIRED TO CONNECT 3309 GANDALF DATA SET TO A TN74B CIRCUIT PACK LOCATED IN PCCA. (DSC EXPORT). 250 FEET MAX LENGTH.			39D								
CONNECTORIZED SWITCHBOARD CABLE ASSEMBLY REQUIRED TO CONNECT A AT&T STU-3 SECURE DATA DEVICE, MODEL 1900 ONLY,MOUNTED ON A DS CABINET TO A TN74B CIRCUIT PACK LOCATED IN PCC.			39E								
APPARATUS, WIRING AND ASSEMBLY FOR A PERIPHERAL CONTROL CABLE TO CONNECT A 3800 SERIES MODEM TO AN UN582 CP PROVIDING AN RS232C ASYNCHRONOUS DATA LINK. (X DIM. 50 FT MAX LENGTH)			39F								
APPARATUS, WIRING AND ASSEMBLY FOR A PERIPHERAL CONTROL CABLE TO CONNECT A 202T DATA SET TO A UN582 CP PROVIDING AN RS232C ASYNCHRONOUS DATA LINK. (X DIM. 250 FT MAX LENGTH) REPL:NONE			39G								
APPARATUS, WIRING AND ASSEMBLY FOR A PERIPHERAL CONTROL CABLE TO CONNECT A GANDALF 3309 DATA SET TO A UN582 CP PROVIDING AN RS232C ASYNCHRONOUS DATA LINK. (X DIM. 50 FT MAX LENGTH) REPL:NONE			39H								
APPARATUS, WIRING AND ASSEMBLY FOR A PERIPHERAL CONTROL CABLE TO CONNECT A GANDALF 3309 DATA SET TO A UN582 CP PROVIDING AN RS232C ASYNCHRONOUS DATA LINK. (X DIM. 250 FT MAX LENGTH) REPL:NONE			39J								

TABLE-A CONTINUED

COPYRIGHT @ 2001 LUCENT TECHNOLOGIES
ALL RIGHTS RESERVED

BT13

INTERCABINET CABLING
FOR
5ESS * SWITCH
*LUCENT TRADEMARK

DWG SIZE C2 | ISSUE 117

PRINTED IN U.S.A.

TABLE A-FEATURES(CONTINUED)

EQUIPMENT DESCRIPTION	REF NOTE	RAT-ING	LIST OR GROUP	EQUIPMENT OR CIRCUIT DATA QTY	EQUIPMENT OR CIRCUIT	L/G OR FIG	WRG	APP	SD EQUIVALENT SCHEMATIC	FIG	OPT
APPARATUS, WIRING AND ASSEMBLY FOR A PERIPHERAL CONTROL CABLE TO CONNECT A AT&T STU-II SECURE (MODEL 1900) DATA SET TO A UN582 CP PROVIDING AN RS232C ASYNCHRONOUS DATA LINK. (X DIM. 50 FT MAX LENGTH) REPL:NONE			39K								
CONNECTORIZED SWITCHBOARD CABLE ASSEMBLY REQUIRED TO CONNECT A 2024A,2048A OR 2096A DATA SET, MOUNTED ON DATA SET CABINET TO A TN75B (MC4048A-1) OR TN75C CIRCUIT PACK LOCATED IN THE PROC CONT CAB(PCCA) (SEE SD-5D011-01).			40								
BULK SWITCHBOARD CABLE REQUIRED TO PROVIDE POWER FOR THE INTERCABINET COMMUNICATION CIRCUIT FOR C.O.	199		41A								
CONNECTORIZED SWBD CABLE ASSEMBLY REQUIRED FOR SM E/W AU TYPE FUSE/FILTER PANEL TO DF INTERCABINET COMMUNICATION CIRCUIT; (SEE G41D FOR CM2 OR SM E/W BT TYPE FUSE/FILTER PNL TO DF) (TEL A,A1,SP,TTY-A,TTY-B) (FOR C.O. E/W CM2 ONLY;SEE G137 FOR RSM,MMRSM,TRM OR ORM). (SEE SK.K TBL KA1)			41C								
CONNECTORIZED SWBD CABLE ASSEMBLY REQUIRED FOR CM2 OR SM E/W BT TYPE FUSE/FILTER PNL TO DF INTERCABINET COMMUNICATION CIRCUIT;(SEE G41C FOR SM E/W AU TYPE FUSE/FILTER PANEL TO DF) (TEL A,A1,SP,TTY-A,TTY-B). (FOR C.O. E/W CM2 ONLY, SEE G137 FOR RSM,MMRSM,TRM OR ORM). (SEE SK.K TBL KA1)			41D								
CONNECTORIZED SWBD CABLE ASSEMBLY REQUIRED FOR A SM, CM2 OR 2SM'S IN A SMC OR RING NODE CABINET E/W A MODULAR FUSE/FILTER PNL (J5D003FJ) TO DF (SWC) INTERCABINET COMMUNICA-TIONS CIRCUIT. (FOR C.O. E/W CM2 ONLY) (TEL A,A1,SP,TTY-A, TTY-B), SEE G137A FOR RSM, MMRSM, TRM OR ORM. (SEE SK.K TBL KA3)			41E								
CONNECTORIZED SWBD CABLE ASSEMBLY REQUIRED IN ADDITION TO G41C OR G41D FOR SM TO SM EACH E/W AU TYPE FUSE/FILTER PNL INTERCABINET COMMUNICATION MULT (SEE SK.K TBL KA2)			42A								
CONNECTORIZED SWBD CABLE ASSEMBLY REQUIRED IN ADDITION TO G41C OR G41D FOR CM2 TO CM2 OR FROM SM TO SM EACH E/W BT TYPE FUSE/FILTER PNLS OR FROM CM2 TO SM E/W BT TYPE FUSE/FILTER PNL INTERCABINET COMMUNICATION MULT (SEE SK.K TBL KA2)			42B								
CONNECTORIZED SWBD CABLE ASSEMBLY REQUIRED IN ADDITION TO G41C OR G41D FOR SM E/W AU TYPE FUSE/FILTER PNL TO CM2 OR FROM SM E/W AU TYPE FUSE/FILTER PNL TO SM E/W BT TYPE FUSE/FILTER PNL INTERCABINET COMMUNICATION MULT (SEE SK.K TBL KA2)			42C								

TABLE-A CONTINUED

TABLE A-FEATURES(CONTINUED)

EQUIPMENT DESCRIPTION	REF NOTE	RAT-ING	LIST OR GROUP	EQUIPMENT OR CIRCUIT DATA QTY	EQUIPMENT OR CIRCUIT	L/G OR FIG	WRG	APP	SD EQUIVALENT SCHEMATIC	FIG	OPT
CONNECTORIZED SWBD CABLE ASSEMBLY REQUIRED IN ADDITION TO G41C OR G41D FOR CM2 TO SM E/W AU TYPE FUSE/FILTER PNL OR FROM SM E/W BT TYPE FUSE/ FILTER PNL TO SM E/W AU TYPE FUSE/FILTER PNL INTERCABINET COMMUNICATION CIRCUIT (SEE SK.K TBL KA2)			42D								
CONNECTORIZED SWBD CABLE ASSEMBLY REQUIRED IN ADDITION TO G41E FOR EITHER A STD SM, CM2,SM2K LTP( ) OR 2SM'S IN SMC E/W FJ MODULAR FUSE/FILTER PNL TO AN EXISTING RECONFIGURED SMC E/W AU TYPE FUSE/FILTER PNL INTERCABINET COMMUNICATION MULT. (FOR C.O. E/W CM2 OR MMRSM) (SEE SK.K TBL KA4)			42E								
CONNECTORIZED SWBD CABLE ASSEMBLY REQUIRED IN ADDITION TO G41E FOR EITHER A STD SMC, CM2,SM2K LTP( ) OR 2SM'S IN SMC E/W FJ MODULAR FUSE/FILTER PNL TO AN EXISTING RECONFIGURED SM E/W BT TYPE FUSE/FILTER PNL OR CM2 E/W BJ TYPE FUSE/FILTER PNL OR RING NODE CAB E/W AU TYPE FUSE/FILTER PNL, INTERCABINET COMMUNICATION MULT. (FOR C.O. E/W CM2 OR MMRSM). (SEE SK.K TBL KA4).			42F								
CONNECTORIZED SWBD CABLE ASSEMBLY REQUIRED IN ADDITION TO G41E FOR AN EXISTING RECON-FIGURED SMC E/W AU TYPE FUSE/ FILTER PNL TO A STD SMC, CM2,SM2K LTP( ) OR 2SM'S IN SMC E/W FJ MODULAR FUSE/FILTER PNL INTERCABINET COMMUNICATION MULT. (FOR C.O. E/W CM2 OR MMRSM) (SEE SK.K TBL KA4)			42G								
CONNECTORIZED SWBD CABLE ASSEMBLY REQUIRED IN ADDITION TO G41E FOR A CM2 E/W BJ TYPE FUSE/FILTER PNL OR RECONFIGURED SMC E/W BT TYPE FUSE/FILTER TO A STD SMC, CM2 ,SM2K LTP( ) OR 2SM'S IN SMC E/W FJ MODULAR FUSE/FILTER PNL INTERCABINET COMMUNICATION MULT. (FOR C.O. E/W CM2 OR MMRSM) (SEE SK.K TBL KA4)			42H								

TABLE-A CONTINUED

COPYRIGHT @ 2001 LUCENT TECHNOLOGIES
ALL RIGHTS RESERVED

BT13

INTERCABINET CABLING
FOR
5ESS * SWITCH
*LUCENT TRADEMARK

DWG SIZE C2 | ISSUE 117

LUCENT TECHNOLOGIES INC | ED5D500-21 | SHEET A15 OF 292

PRINTED IN U.S.A.

TABLE A-FEATURES(CONTINUED)

EQUIPMENT				EQUIPMENT OR CIRCUIT DATA					SD EQUIVALENT		
DESCRIPTION	REF NOTE	RAT-ING	LIST OR GROUP	QTY	EQUIPMENT OR CIRCUIT	L/G OR FIG	WRG	APP	SCHEMATIC	FIG	OPT
CONNECTORIZED SWBD CABLE ASSEMBLY REQUIRED IN ADDITION TO G41E FOR A STD SMC, CM2, SM2K LTP( ) OR 2SM'S IN SMC OR RING NODE CABINET E/W FJ MODULAR FUSE /FILTER PNL TO A STD SMC, CM2, SM2K LTP( ) OR 2SM'S IN SMC E/W FJ FUSE/FILTER PNL (OR A DNU-S LOCATED IN A LTP CABINET E/W 3FJ FUSE/FILTER WHICH IS IN THE TRANSMISSION AREA LOCATED OUTSIDE THE 5E FOOT PRINT)INTERCABINET COMMUNICATION MULT.(FOR C.O. E/W CM2 OR MMRSM) (SEE SK.K TBL KA4)			42J								
CONNECTORIZED SWITCHBOARD CABLE ASSEMBLY REQUIRED TO CONNECT A 212AR DATA SET MOUNTED ON DATA SET CABINET TO A TN75C CIRCUIT PACK LOCATED IN THE PROC CONT CAB(PCCA) (SEE SD-5D011-01).			43								
CONNECTORIZED SWBD CABLE ASSEMBLY REQUIRED TO CONNECT A 212AR DATA SET MOUNTED ON DATA SET CABINET TO A TN74B CIRCUIT PACK LOCATED IN PROC CONT CAB (PCCA). SEE SD-5D011-01 (MAX CABLE LENGTH 100').			43A								
CONNECTORIZED SWBD CABLE ASSEMBLY REQUIRED TO CONNECT A MODEM TO TN75C/85C CIRCUIT PACK (MAX LENGTH 50 FT)			43B								
APPARATUS, WIRING AND ASSEMBLY FOR ONE PERIPHERAL CONTROL CABLE TO CONNECT A 3800 SERIES MODEM TO AN UN582 CP PROVIDING AN RS232C SYNCHRONOUS DATA LINK. (X DIM. 200 FT MAX LENGTH)			43C								
APPARATUS, WIRING AND ASSEMBLY FOR A PERIPHERAL CONTROL CABLE TO CONNECT A 3800 SREIES MODEM OR 2224 CEO MODEM TO A UN582 CP PROVIDING AN RS232C ASYNCHRONOUS DATA LINK. (X DIM. 100 FT MAX LENGTH)			43D								
CONNECTORIZED CABLE ASSEMBLIES REQUIRED FOR ALARM MULT BETWEEN FUSE/FILTER PANELS OF EACH SUCCEEDING MISC CABINET, FOR AU-2 TO AU-2 F/F. (SEE FIG. J).			44								
CONNECTORIZED CABLE ASSEMBLIES REQUIRED FOR ALARM MULT BETWEEN FUSE/FILTER PANELS OF EACH MISC CABINET E/W AU-2 F/F FROM SUCCEEDING CAB E/W MFFU F/F. (SEE FIG. J). DA EFF:03-31-97 FE:ED5D500-21,G44D		DA	44A								
CONNECTORIZED CABLE ASSEMBLIES REQUIRED FOR ALARM MULT BETWEEN FUSE/FILTER PANELS OF EACH MISC CABINET E/W MFFU FROM SUCCEEDING MISC CAB E/W MFFU. (SEE FIG. J). DA EFF:03-31-97 FE:ED5D500-21,G44E		DA	44B								
CONNECTORIZED CABLE ASSEMBLIES REQUIRED FOR ALARM MULT BETWEEN FUSE/FILTER PANELS OF EACH MISC CABINET E/W MFFU FROM SUCCEEDING MISC CAB E/W AU-2 F/F (SEE FIG. J). DA EFF:03-31-97 FE:ED5D500-21,G44F		DA	44C								

TABLE-A CONTINUED

TABLE A-FEATURES(CONTINUED)

EQUIPMENT				EQUIPMENT OR CIRCUIT DATA					SD EQUIVALENT		
DESCRIPTION	REF NOTE	RAT-ING	LIST OR GROUP	QTY	EQUIPMENT OR CIRCUIT	L/G OR FIG	WRG	APP	SCHEMATIC	FIG	OPT
CONNECTORIZED CABLE ASSEMBLIES REQUIRED FOR ALARM MULT BETWEEN FUSE/FILTER PANELS OF EACH MISC CABINET E/W AU-2 F/F FROM SUCCEEDING CAB E/W MFFU F/F. (SEE FIG. J) REPL:ED5D500-21,G44A			44D								
CONNECTORIZED CABLE ASSEMBLIES REQUIRED FOR ALARM MULT BETWEEN FUSE/FILTER PANELS OF EACH MISC CABINET E/W MFFU FROM SUCCEEDING MISC CAB E/W MFFU. (SEE FIG. J). REPL:ED5D500-21,G44B			44E								
CONNECTORIZED CABLE ASSEMBLIES REQUIRED FOR ALARM MULT BETWEEN FUSE/FILTER PANELS OF EACH MISC CABINET E/W MFFU FROM SUCCEEDING MISC CAB E/W AU-2 F/F (SEE FIG. J) REPL:ED5D500-21,G44C			44F								
CONNECTORIZED CABLE ASSEMBLIES REQUIRED FOR THE OFFICE ALARM UNIT WHEN ADDITIONAL SCAN POINTS 48 TO 95 ARE REQUIRED. (SEE FIG.J)			45								
CONNECTORIZED CABLE ASSEMBLIES REQUIRED FOR THE OFFICE ALARM UNIT WHEN ADDITIONAL SCAN POINTS 96 & 97 ARE REQUIRED FOR PDF 6 & 7. (SEE FIG.J)			45A								
BULK SWITCHBOARD CABLE REQUIRED FOR MUSIC ON QUEUE (J1A033GR-1) INSTALLED ON THE MISCELLANEOUS CABINET CONNECTED TO A DF (SWC). SEE FIG 1A.			46								
BULK SWITCHBOARD CABLE REQUIRED FOR MUSIC OR SILENCE ON QUEUE (J1A033GU-1) INSTALLED ON THE MISCELLANEOUS CABINET CONNECTED TO A DF (SWC). SEE FIG 1A.			46A								
BULK SWITCHBOARD CABLE REQUIRED FOR EACH MUSIC ON QUEUE UNIT (J1A033GR-1) INSTALLED ON THE MISCELLANEOUS CABINET CONNECTED TO A DF (SWC) TO PROVIDE MUSIC PROGRAM. SEE FIG. 1A. (REQUIRED WHEN INTERCONNECTION BETWEEN A TRANSMITTING STUDIO OR SUPPLY CIRCUIT IN AN OTHER OFFICE).			46B								
BULK SWITCHBOARD CABLE REQUIRED BETWEEN MUSIC OR SILENCE ON QUEUE (J1A033GU-1) AND MUSIC ON QUEUE (J1A033GR-1) WHEN UNITS ARE LOCATED ON DIFFERENT MISCEL-LANEOUS CABINETS.			46C								

TABLE-A CONTINUED

COPYRIGHT @ 2001 LUCENT TECHNOLOGIES
ALL RIGHTS RESERVED

BT13

INTERCABINET CABLING
FOR
5ESS * SWITCH
*LUCENT TRADEMARK

DWG SIZE C2 | ISSUE 117

PRINTED IN U.S.A.

TABLE A-FEATURES(CONTINUED)

EQUIPMENT				EQUIPMENT OR CIRCUIT DATA						SD EQUIVALENT		
DESCRIPTION	REF NOTE	RAT-ING	LIST OR GROUP	QTY	EQUIPMENT OR CIRCUIT	L/G OR FIG	WRG	APP	SCHEMATIC	FIG	OPT
CONNECTORIZED CABLE ASSEMBLY REQUIRED FOR EACH TEST ACCESS UNIT (TAU) WHEN THE DC ACCESS JACKS (J1 & J2) ARE INTERCONNECTED TO THE MODULAR METALLIC SERVICE UNIT (MMSU) VIA DF (SWC) AND ASSIGNED TO PORTS 0-7 (SEE TABLE CC & NOTE 73).			50								
CONNECTORIZED CABLE ASSEMBLY REQUIRED FOR EACH TEST ACCESS UNIT (TAU) WHEN THE DC ACCESS JACKS (J1 & J2) ARE INTERCONNECTED TO THE MODULAR METALLIC SERVICE UNIT (MMSU) VIA DF (SWC) AND ASSIGNED TO PORTS 8-14 (SEE TABLE CC & NOTE 73).			51								
BULK SWITCHBOARD CABLE REQUIRED FOR 2ND OR 3RD EXIT PILOT LAMP. (SEE FIG. J OR J1).	199		52								
BULK SWITCHBOARD CABLE REQUIRED FOR 4TH,5TH OR 6TH EXIT PILOT LAMP. FROM OAU ONLY (NOT REQD WHEN RARU PER J5D005C-1 L16,LX AND LZ IS SPECIFIED FOR VIS ALM). (SEE FIG. J OR J1).	199		53								
CONNECTORIZED CABLE ASSEMBLIES REQUIRED FOR A TEST ACCESS UNIT LOCATED IN THE MCC/TLWS OR A SUPPLEMENTARY TRUNK LINE WORK STATION.			54								
CONNECTORIZED SWBD CABLE ASSEMBLIES REQUIRED FOR A TEST ACCESS CIRCUIT PANEL (ED5D562-30). (EXPORT ONLY).			54A								
CONNECTORIZED CABLE ASSEMBLY REQUIRED FOR THE INTERFACE OF A 212AR DATA SET WITH THE DISTRIBUTING FRAME.			55								
CABLE ASSEMBLY REQUIRED TO INTERCONNECT THE 48FR1 DATA SET WITH THE DISTRIBUTING FRAME. (4-WIRE LOCAL ARRANGEMENT).			56								
CONNECTORIZED SWBD CABLE ASSEMBLY REQUIRED TO INTERCONNECT THE 48FR1 DATA SET WITH THE DF. (8-WIRE DIAL BACKUP).			56A								
CABLE ASSEMBLY REQUIRED FOR THE MASTER CONTROL CENTER AND EACH TLWS OR SUPPLEMENTARY TRUNK LINE WORK STATION (CONSOLE TYPE).	199		58								
CABLE ASSEMBLY REQUIRED FOR 46A2 DATA MTG.	199		59								
CONNECTORIZED SWBD CABLE ASSEMBLY REQUIRED TO CONNECT A (ROP 5310/5320 PRINTER) LOCATED IN A STLWS (0-5) TO THE PROC CONT CAB(PCCA). (MAX. LENGTH OF 50'; FOR A GREATER LENGTH SEE G64).			60								
CONNECTORIZED SWBD CABLE ASSEMBLY REQUIRED TO CONNECT A VT100 LOCATED IN A STLWS (0-5) OR RCV-LOC TERM WHEN CONNECTED TO THE PROC CONT CAB (PCCA) (MAX LENGTH OF 50'. FOR A GREATER LENGTH SEE G65).			61								
BULK SWITCHBOARD CABLE REQUIRED FOR MCC/TLWS OR EACH STLWS TO DF (IN LINE CABINETS OR CONSOLE).	199		62								

TABLE-A CONTINUED

TABLE A-FEATURES(CONTINUED)

EQUIPMENT				EQUIPMENT OR CIRCUIT DATA						SD EQUIVALENT		
DESCRIPTION	REF NOTE	RAT-ING	LIST OR GROUP	QTY	EQUIPMENT OR CIRCUIT	L/G OR FIG	WRG	APP	SCHEMATIC	FIG	OPT
CONNECTORIZED SWITCHBOARD CABLE ASSEMBLY REQUIRED TO CONNECT A COLOR VIDEO TERMINAL OR AT&T 444 OR 572 PRINTER LOCATED IN STLWS (0-5) TO THE PROC CONT CAB (PCCA). (MAX. LENGTH OF 50'. FOR A GREATER LENGTH SEE G66).			63								
APPARATUS, WIRING AND ASSEMBLY FOR A PERIPHERAL CONTROL CABLE TO CONNECT A ROP (572 0R 577 PRINTER) OR KS23996,L1 COLOR TERMINAL OR A 2900 SERIES MONO-CHROME TERMINAL TO A UN582 CP ASYNCHRONOUS DATA LINK. (X-DIM. 250 FT. MAX LENGTH)			63A								
APPARATUS, WIRING AND ASSEMBLY FOR A PERIPHERAL CONTROL CABLE TO CONNECT A VT100 TO A UN582 CP PROVIDING A NULL MODEM RS232C ASYNCHRONOUS DATA LINK. (X DIM. 250 FT MAX. LENGTH) REPL:NONE			63B								
APPARATUS, WIRING AND ASSEMBLY FOR A PERIPHERAL CONTROL CABLE TO CONNECT A COLOR VT TO A UN582 CP PROVIDING AN RS232C ASYNCHRONOUS DATA LINK. (X DIM. 250 FT. MAX. LENGTH) REPL:NONE			63C								
CONNECTORIZED SWITCHBOARD CABLE ASSEMBLY REQUIRED TO CONNECT A (ROP 5310/5320 PRINTER) LOCATED IN STLWS (0-5) TO THE PROC CONT CAB(PCCA) (MAX. LENGTH OF 250').			64								
CONNECTORIZED SWITCHBOARD CABLE ASSEMBLY REQUIRED TO CONNECT A VT100 LOCATED IN A STLWS (0-5) TO THE PROC CONT CAB(PCCA) (MAX. LENGTH OF 250').			65								
CONNECTORIZED SWITCHBOARD CABLE ASSEMBLY REQUIRED TO CONNECT A COLOR VIDEO TERMINAL OR AT&T 444 OR 572 PRINTER LOCATED IN STLWS (0-5) TO THE PROC CONT CAB (PCCA);(MAX. LENGTH OF 250')			66								
APPARATUS, WIRING AND ASSEMBLY FOR A PERIPHERAL CONTROL CABLE TO CONNECT A ROP (572 OR 577 PRINTER) OR KS23996,L1 COLOR TERMINAL OR A 2900 SERIES MONO-CHROME TERMINAL TO A UN582 CP PROVIDING A NULL MODEM RS232C ASYNCHRONOUS DATA LINK. (X DIM. 250 FT. MAX. LENGTH) DA EFF:07/20/99 RA:ED5D500-21,G63A		DA	66A								

TABLE-A CONTINUED

COPYRIGHT @ 2001 LUCENT TECHNOLOGIES
ALL RIGHTS RESERVED

BT13

INTERCABINET CABLING
FOR
5ESS * SWITCH
*LUCENT TRADEMARK

DWG SIZE C2 | ISSUE 117

LUCENT TECHNOLOGIES INC | ED5D500-21 | SHEET A17 OF 292

PRINTED IN U.S.A.

TABLE A-FEATURES(CONTINUED)

EQUIPMENT				EQUIPMENT OR CIRCUIT DATA					SD EQUIVALENT		
DESCRIPTION	REF NOTE	RAT-ING	LIST OR GROUP	QTY	EQUIPMENT OR CIRCUIT	L/G OR FIG	WRG	APP	SCHEMATIC	FIG	OPT
APPARATUS, WIRING AND ASSEMBLY FOR A PERIPHERAL CONTROL CABLE TO CONNECT A VT100 TO A UN582 CP PROVIDING A NULL MODEM RS232C ASYNCHRONOUS DATA LINK. (X DIM. 250 FT. MAX. LENGTH) DA EFF:07/20/99 RA:ED5D500-21,G63B		DA	66B								
APPARATUS, WIRING AND ASSEMBLY FOR A PERIPHERAL CONTROL CABLE TO CONNECT A COLOR VT TO A UN582 CP PROVIDING AN RS232C ASYNCHRONOUS DATA LINK. (X DIM. 250 FT. MAX. LENGTH) DA EFF:07/20/99 RA:ED5D500-21,G63C		DA	66C								
CONNECTORIZED SWITCHBOARD CABLE ASSEMBLY REQUIRED TO CONNECT A (ROP 5310/5320 PRINTER) OR VT100 LOCATED IN STLWS (0-5) TO 202T TYPE DATA SET FOR A DISTANCE UP TO 50’.			67								
CONNECTORIAED SWITCHBOARD CABLE ASSEMBLY REQUIRED TO CONNECT A (ROP 5310/5320 PRINTER) OR VT100 (BK/W) LOCATED IN STLWS (0-5) TO A DS FOR A DISTANCE OVER 50’ UP TO 250’.			67A								
CONNECTORIZED SWITCHBOARD CABLE ASSEMBLY REQUIRED TO CONNECT A COLOR VIDEO TERMINAL OR AT&T 444 OR 572 PRINTER LOCATED IN STLWS (0-5) TO 202T TYPE DATA SET FOR A DISTANCE UP TO 50’.			68								
CONNECTORIZED SWITCHBOARD CABLE ASSEMBLY REQUIRED TO CONNECT A COLOR VIDEO TERMINAL OR AT&T 444 OR 572 PRINTER LOCATED IN STLWS (0-5) TO A DS FOR A DISTANCE OVER 50’ UP TO 250’.			68A								
CONNECTORIZED SWBD CABLE ASSEMBLY REQUIRED TO CONNECT A MODEL 43 TTY TO A 212AR DATA SET MOUNTED ON A DATA SET CABINET (MAX CABLE LENGTH 100’).			69								
CONNECTORIZED SWITCHBOARD CABLE ASSEMBLY REQUIRED TO CONNECT A MICRO ASYNCHRONOUS TO SYNCHRONOUS CONVERTER (MSA) TO A 2048A DATA SET MOUNTED IN DATA SET CABINET.			70								
CONNECTORIZED SWITCHBOARD CABLE ASSEMBLY REQUIRED FOR USE FOR REMOTE STLWS ARRANGEMENTS TO CONNECT 212A DATA SET MOUNTED IN DATA SET CABINET TO TN74B (MC 4C011A-1) CIRCUIT PACK LOCATED IN THE PROC CONT CAB (PCCA) (SEE SD5D011-01).			71								
CONNECTORIZED SWBD CABLE ASSEMBLY REQUIRED TO CONNECT A 56K (V.35) 2556B DATA SET TO TN82 (MC4C051A-1) CIRCUIT PACK LOCATED IN I/O UNIT.			72								
BULK SWITCHBOARD CABLE REQUIRED IN ADDITION TO G72 FROM 103A CONN BLK TO A DF.	199		72A								
BULK SWITCHBOARD CABLE REQUIRED FOR 9.6K DATA LINK BETWEEN 103A CONN BLOCKS. (API APPL).			72B								
APPARATUS, WIRING AND ASSEMBLY FOR A PERIPHERAL CONTROL CABLE TO CONNECT A 2556B DATA SET OR A 3500 SERIES MODEM TO A UN582 CP PROVIDING A V.35/V.36 DATA LINK. (X DIM. 150 FT. MAX. LENGTH).			72C								

TABLE-A CONTINUED

TABLE A-FEATURES(CONTINUED)

EQUIPMENT				EQUIPMENT OR CIRCUIT DATA					SD EQUIVALENT		
DESCRIPTION	REF NOTE	RAT-ING	LIST OR GROUP	QTY	EQUIPMENT OR CIRCUIT	L/G OR FIG	WRG	APP	SCHEMATIC	FIG	OPT
APPARATUS, WIRING AND ASSEMBLY FOR A PERIPHERAL CONTROL CABLE TO CONNECT A HARDWARE FLOW CONTROL DATA SET TO A UN582 CP PROVIDING AN RS232C ASYNCHRONOUS DATA LINK. (X DIM. 50 FT MAX LENGTH) REPL:NONE			73								
APPARATUS, WIRING AND ASSEMBLY FOR A PERIPHERAL CONTROL CABLE TO CONNECT A HARDWARE FLOW CONTROL DATA SET TO A UN582 CP PROVIDING A NULL MODEM RS232C ASYNCHRONOUS DATA LINK. (X DIM. 50 FT MAX LENGTH) REPL:NONE			74								
APPARATUS, WIRING AND ASSEMBLY FOR A PERIPHERAL CONTROL CABLE TO CONNECT A 2024A, 2048A OR 2096A DATA SET TO A UN582 CP PROVIDING A RS449 DATA LINK. (X DIM. 50 FT MAX LENGTH) REPL:NONE			75								
CONNECTORIZED CABLE ASSEMBLY FROM ED5D875-30 OKEFORD 4U SIGNALING PROTOCOL CONVERTER, MOUNTED IN MISC CABINET, E1 TRUNK TRANSMIT AND RECEIVE SIGNALS TO DSX. REPL:NONE			76								
CONNECTORIZED CABLE ASSEMBLY FROM ED5D875-30 OKEFORD 4U SIGNALING PROTOCOL CONVERTER, MOUNTED IN MISC CABINET-ALARM RELAY CARD TO MDF. REPL:NONE			77								
CONNECTORIZED CABLE ASSEMBLY FROM ED5D875-30 CRONUS SIGNALPATH 230 SIGNALING PROTOCOL CONVERTER,MOUNTED IN MISC CAB,E1 TRUNK TRANSMIT AND RECEIVE SIGNALS TO DSX. REPL:NONE			78								
APPARATUS, WIRING AND ASSEMBLY FOR A PERIPHERAL CONTROL CABLE TO CONNECT A 2024A, 2048A OR 2096A DATA SET TO A UN582 CP PROVIDING A RS449 DATA LINK. (X DIM. 150 FT MAX LENGTH) REPL:NONE			79								
CONNECTORIZED SWBD CABLE ASSEMBLIES REQUIRED FOR A MULTI-MOD RSM WHEN E/W RCU (J5D003FC). (DIRECTLY REPLC’D BY G80F).		DA	80								
CONNECTORIZED SWBD CABLE ASSEMBLIES, REQUIRED IN ADDITION TO G80 FOR A T1 REFERENCES (1-8) (COAXIAL CABLES) EXPORT ONLY. SEE FIG. N.			80A						SD5D075-01		Y

TABLE-A CONTINUED

COPYRIGHT @ 2001 LUCENT TECHNOLOGIES
ALL RIGHTS RESERVED

BT13

INTERCABINET CABLING
FOR
5ESS * SWITCH
*LUCENT TRADEMARK

DWG SIZE C2 | ISSUE 117

LUCENT TECHNOLOGIES INC | ED5D500-21 | SHEET A18 OF 292

PRINTED IN U.S.A.

TABLE A-FEATURES(CONTINUED)

EQUIPMENT				EQUIPMENT OR CIRCUIT DATA						SD EQUIVALENT		
DESCRIPTION	REF NOTE	RAT-ING	LIST OR GROUP	QTY	EQUIPMENT OR CIRCUIT	L/G OR FIG	WRG	APP	SCHEMATIC	FIG	OPT
CONNECTORIZED SWBD CABLE ASSEMBLIES REQUIRED IN ADDITION TO G80, WHEN BSRF IS SPECIFIED (COAXIAL CABLES). SEE FIG. N.			80B								
CONNECTORIZED SWBD CABLE ASSEMBLIES REQUIRED IN ADDITION TO G80 FOR T1 CLK REF 1 & 2. (CABLE LENGTH LESS THAN 460 FEET). FOR DOMESTIC APPLICATION ONLY. (SEE FIG. N).			80C						SD5D075-01		Z
CONNECTORIZED SWBD CABLE ASSEMBLIES REQUIRED IN ADDITION TO G80 FOR T1 CLK REF 1 & 2. (CABLE LENGTH 460 FEET OR MORE). DOMESTIC APPLICATION ONLY. SEE FIG. N.			80D						SD5D075-01		Z
CONNECTORIZED SWBD CABLE ASSEMBLIES REQUIRED FOR A RCU (J5D003FC) TO PROVIDE BSRF IN NCLK2 WHEN CABLE LENGTH OVER 200' AND MAXIMUM OF 2000' IS REQUIRED. 374B 90 DEGREES PLUG AT ATF. (FOR CABLES 200' OR LESS SEE GROUP 80B). SEE FIG. N.			80E								
CONNECTORIZED SWBD CABLE ASSEMBLY REQUIRED FOR MMRSM WHEN EQPD WITH RCU (J5D003FC). (ALARM CABLE). SEE FIG. N.			80F								
CONNECTORIZED SWBD CABLE ASSEMBLY REQUIRED FOR ORM, WHEN TRCU J5D003ED-1 L1 (HOST OR REMOTE-16 CABLES PER EACH) OR L2 (HOST OFFICE-16 CABLES) IS SPECIFIED. (COAX CABLE FROM TRCU TO GROUND WINDOW AND FROM GROUND WINDOW TO DSX3 MAX TOTAL LENGTH OF BOTH CABLES IS 450 FEET). SEE TBL CJ AND FIG. R. SEE NOTE 89,93 AND 95. THIS GROUP IS DIRECTLY RPLC'D BY G85A EQPD FOR A NEW GRD BAR ASSY.		DA	85								
CONNECTORIZED SWBD CABLE ASSEMBLY REQUIRED FOR ORM, WHEN TRCU J5D003ED-1 (HOST OR REM) IS SPECIFIED. TWO GROUPS 85A ARE REQUIRED FOR EACH ORM APPL. (ONE FOR REMOTE, ONE FOR HOST). THIS GROUP IS EQUIPPED WITH A NEW GROUND BAR ASSY (845623925). MAX. COMBINED LENGTH OF COAX CABLE FROM TRCU TO GRD BAR AND FROM GRD BAR TO DSX3 IS 450 FEET. SEE TBL CJ AND FIG. R. SEE NOTE 89,93 AND 95.			85A								
CONNECTORIZED SWBD CABLE ASSEMBLIES REQUIRED FOR ORM, WHEN TRCU2 J5D003ED-2 IS EQUIPPED FOR 45MB ELECTRICAL OPT. TWO GROUPS 86 ARE REQUIRED FOR EACH ORM APPLICATION (ONE FOR ORM, ONE FOR HOST). MAX. COMBINED LENGTH OF COAX CABLES FROM TRCU2 TO GRD BAR TO DSX3 IS 450 FEET. SEE FIG. S. DIRECTLY REPLC'D BY COST EFFECTIVENESS GROUP 86A.		DA	86								

TABLE-A CONTINUED

TABLE A-FEATURES(CONTINUED)

EQUIPMENT				EQUIPMENT OR CIRCUIT DATA						SD EQUIVALENT		
DESCRIPTION	REF NOTE	RAT-ING	LIST OR GROUP	QTY	EQUIPMENT OR CIRCUIT	L/G OR FIG	WRG	APP	SCHEMATIC	FIG	OPT
CONNECTORIZED SWBD CABLE ASSEMBLIES REQUIRED FOR ORM, WHEN TRCU2 J5D003ED-2 IS EQUIPPED FOR 45MB ELECTRICAL OPT. TWO GROUPS 86A ARE REQUIRED FOR EACH ORM APPLICATION, (ONE FOR ORM, ONE FOR HOST). MAX. COMBINED LENGTH OF COAX CABLES FROM TRCU2 TO GRD BAR TO DSX3 IS 450 FEET. SEE FIG. S. (COST EFFECTIVENESS GROUP USING 734D CABLE, DIRECTLY REPLACING GROUP 86).			86A								
FIBER OPTIC LIGHTGUIDE CABLE ASSEMBLIES REQUIRED FOR ORM, WHEN TRCU2 J5D003ED-2 IS EQUIPPED FOR 90MB OPTICAL OPTION. TWO GROUPS 87 ARE REQUIRED FOR EACH ORM APPLICATION (ONE FOR ORM, ONE FOR HOST). THIS GROUP CONSISTS OF (TW0) 8.3 MICRON YELLOW FO CABLES AND (TWO) 50 MICRON WHITE FO CABLES. THIS GROUP MAY BE USED FOR BOTH-SINGLE OR MULTI-MODE OUTSIDE PLANT. THESE CABLES SHALL NOT BE ORDERED BY THE GROUP, BUT BY THE STOCKLIST ITEMS AS SPECF'D IN NOTE 151. (SEE G88 & 89 WHEN AT&T LGX IS SPEC). SEE FIG. S1 AND NOTE 151. (DIRECTLY RPLC'D WITH G87A & 87B).	199	DA	87								
8.3 MICRON FIBER OPTIC LIGHT-GUIDE CABLE (XMT) REQUIRED IN ADDITION TO GROUP 87B FOR ORM, WHEN TRCU2 J5D003ED-2 IS EQUIPPED FOR A 90 MB OPTICAL OPTION. TWO GROUPS 87A ARE REQ'D FOR EACH ORM APPLICATION (ONE FOR REM, ONE FOR HOST). SEE NOTE 151 AND FIG.S1. (WHEN LUCENT LGX IS SPEC'D, SEE G88). THIS GROUP MAY BE USED FOR SINGLE OR MULTI-MODE. DA EFF:12/30/98 FE:ED5D500-21,G90 FE:ED5D500-21,G91	199	DA	87A								
62.5 MICRON FIBER OPTIC LIGHTGUIDE CA (RCV) REQUIRED IN ADDITION TO G87A ORM, WHEN TRCU2 IS EQUIPPED FOR 90BM OPTICAL OPTION. TWO GROUPS 87B ARE REQUIRED FOR EACH ORM APPLI-CATION (ONE FOR REM, ONE FOR A HOST). SEE FIG. S1. (WHEN LUCENT LGX IS SPEC'D, SEE G89). DA EFF:12/30/98 FE:ED5D500-21,G92 FE:ED5D500-21,G93	199	DA	87B								

TABLE-A CONTINUED

COPYRIGHT @ 2001 LUCENT TECHNOLOGIES
ALL RIGHTS RESERVED

BT13

INTERCABINET CABLING
FOR
5ESS * SWITCH
*LUCENT TRADEMARK

DWG SIZE C2 | ISSUE 117

LUCENT TECHNOLOGIES INC | ED5D500-21 | SHEET A19 OF 292

PRINTED IN U.S.A.

TABLE A-FEATURES(CONTINUED)

EQUIPMENT DESCRIPTION	REF NOTE	RAT-ING	LIST OR GROUP	EQUIPMENT OR CIRCUIT DATA QTY	EQUIPMENT OR CIRCUIT	L/G OR FIG	WRG	APP	SD EQUIVALENT SCHEMATIC	FIG	OPT
8.3 MICRON FIBER OPTIC LIGHTGUIDE CABLE ASSY REQD IN ADDITION TO GROUP 89 WHEN AT&T LGX IS SPECIFIED FOR ORM, WHEN TRCU2 (J5D003ED-2) IS EQUIPPED FOR 90MB OPTICAL OPTION. TWO GROUPS 88 ARE REQD FOR EACH ORM APPLICATION (ONE FOR REMOTE, ONE FOR HOST). CABLE IS CONNZ'D AT BOTH ENDS. THIS GROUP MAY BE USED FOR EITHER SINGLE OR MULTI-MODE OUTSIDE PLANT. THESE CABLES SHALL NOT BE ORDERED BY THE GROUP, BUT BY THE STOCKLIST ITEMS AS SPECF'D IN NOTE 152. SEE FIG. S2 AND NOTE 152.	199		88								
50 MICRON FIBER OPTIC LIGHTGUIDE CABLE ASSY ALWAYS REQD IN ADDITION TO GROUP 88 WHEN AT&T LGX IS SPECIFIED. TWO GROUPS 89 ARE REQD FOR EACH ORM APPLICATION. (ONE FOR REMOTE, ONE FOR HOST). CABLE IS CONNZ'D AT BOTH ENDS. THIS GROUP MAY BE USED FOR EITHER- SINGLE OR MULTI-MODE OUTSIDE PLANT. SEE FIG. S2. DA EFF:12/30/98 FE:ED5D500-21,G94 FE:ED5D500-21,G95	199	DA	89								
8.3 MICRON FIBER OPTIC (BICONIC TO SC CONNECTOR) LIGHTGUIDE CABLE (XMT) REQUIRED IN ADDITION TO GROUP 92 FOR ORM, WHEN A 90MB OPTICAL OPTION. TWO GROUPS 90 REQ'D FOR EACH ORM APPLICATION (ONE FOR REM, ONE FOR HOST). SEE NOTE 151 AND FIG S1. (WHEN LUCENT LGX IS SPEC'D, SEE G88). THIS GROUP MAY BE USED FOR SINGLE OR MULTI MODE. REPL:ED5D500-21, G87A	199		90								
8.3 MICRON FIBER OPTIC (BICONIC TO ST CONNECTOR) LIGHTGUIDE CABLE (XMT) REQUIRED IN ADDITION TO GROUP 93 FOR ORM, WHEN A 90MB OPTICAL OPTION. TWO GROUPS 91 REQ'D FOR EACH ORM APPLICATION (ONE FOR REM, ONE FOR HOST). SEE NOTE 151 AND FIG S1. (WHEN LUCENT LGX IS SPEC'D, SEE G88). THIS GROUP MAY BE USED FOR SINGLE OR MULTI MODE. REPL:ED5D500-21, G87A	199		91								
62.5 MICRON FIBER OPTIC (BICONIC TO SC CONNECTOR) LIGHTGUIDE CABLE (RCV) REQUIRED IN ADDITION TO GROUP 90 FOR ORM, WHEN A TRCU2 IS EQUIPPED FOR 90MB OPTICAL OPTION. TWO GROUPS 92 REQ'D FOR EACH ORM APPLICATION (ONE FOR REM, ONE FOR HOST). SEE FIG S1. (WHEN LUCENT LGX IS SPEC'D, SEE G94 AND G95) REPL:ED5D500-21, G87B	199		92								
62.5 MICRON FIBER OPTIC (BICONIC TO ST CONNECTOR) LIGHTGUIDE CABLE (RCV) REQUIRED IN ADDITION TO GROUP 91 FOR ORM, WHEN A TRCU2 IS EQUIPPED FOR 90BM OPTICAL OPTION, TWO GROUPS 93 REQ'D FOR EACH ORM APPLICATION (ONE FOR REM, ONE FOR HOST). SEE FIG S1. (WHEN LUCENT LGX IS SPEC'D, SEE G94 AND G95) REPL:ED5D500-21, G87B	199		93								

TABLE-A CONTINUED

TABLE A-FEATURES(CONTINUED)

EQUIPMENT DESCRIPTION	REF NOTE	RAT-ING	LIST OR GROUP	EQUIPMENT OR CIRCUIT DATA QTY	EQUIPMENT OR CIRCUIT	L/G OR FIG	WRG	APP	SD EQUIVALENT SCHEMATIC	FIG	OPT
50 MICRON FIBER OPTIC LIGHTGUIDE CABLE ASSY ALWAYS REQ'D IN ADDITION TO GROUP 88 WHEN LUCENT LGX IS SPEC'D. TWO GROUPS 94 (BICONIC TO BICONIC CONNECTORS) ARE REQ'D FOR EACH ORM APPLICATION. (ONE FOR REMOTE ONE FOR HOST). CABLE IS CONNZ'D AT BOTH ENDS. THIS GROUP MAY BE USED FOR EITHER SINGLE OR MULTI-MODE OUTSIDE PLANT. REPL:ED5D500-21, G89	199		94								
50 MICRON FIBER OPTIC LIGHTGUIDE CABLE ASSY ALWAYS READ IN ADDITION TO GROUP 88. WHEN LUCENT LGX IS SPEC'D TWO GROUPS G95, (BICONIC TO ST CONN) ARE REQ'D FOR EACH ORM APPLICATION (ONE FOR REMOTE ONE FOR HOST). CABLE IS CONNZ'D AT BOTH ENDS. THIS GROUP MAY BE USDED FOR EITHER SINGLE OR MULTI MODE OUTSIDE PLANT. REPL:ED5D500-21, G89	199		95								
CONNECTORIZED SWBD CABLE ASSEMBLY REQD FOR MISCELLANEOUS EQPT WHEN DF IS EQUIPPED WITH 89M BLK (CONN TRW). (32 PAIR CABLE E/W (1) TRW CONNECTOR).			100								
CONNECTORIZED CABLE ASSEMBLIES REQUIRED FOR EACH SHELF OF EACH MODULAR METALLIC SERVICE UNIT (MMSU) INSTALLED IN A SWITCHING MODULE. (CABLE IS ONLY REQUIRED IF GDX COMPENSATOR IS EQUIPPED ON MMSU SHELF.)			103								
CONNECTORIZED CABLE ASSEMBLY REQUIRED FOR EACH SCAN POINT OR DISTRIBUTE POINT CIRCUIT PACK LOCATED IN SG0 OF ANY SHELF IN A MODULAR METALLIC SERVICE UNIT (MMSU) OR IN CSU CONNECTED TO A DF(SWC) SEE TABLE CE.			104								
CONNECTORIZED CABLE ASSEMBLY REQUIRED FOR EACH SCAN POINT OR DISTRIBUTE POINT CIRCUIT PACK LOCATED IN SGO OF ANY SHELF IN A MODULAR METALLIC SERVICE UNIT (MMSU) OR IN CSU CONNECTED TO A DF (711). SEE TABLE CE AND TBL A1. (89M1AE11-128 DF BLK).			104A								
CONNECTORIZED CABLE ASSEMBLY REQUIRED FOR EACH SCAN POINT OR DISTRIBUTE POINT CIRCUIT PACK LOCATED IN A SGO OF ANY SHELF IN A MODULAR METALLIC SERVICE UNIT (MMSU) OR IN CSU CONNECTED TO A DF (TRW). SEE TABLE CE AND TBL A1. (89M1CE21-128 DF BLK).			104B								

TABLE-A CONTINUED

COPYRIGHT @ 2001 LUCENT TECHNOLOGIES
ALL RIGHTS RESERVED

TABLE A-FEATURES(CONTINUED)

EQUIPMENT				EQUIPMENT OR CIRCUIT DATA						SD EQUIVALENT		
DESCRIPTION	REF NOTE	RAT-ING	LIST OR GROUP	QTY	EQUIPMENT OR CIRCUIT	L/G OR FIG	WRG	APP	SCHEMATIC	FIG	OPT
CONNECTORIZED CABLE ASSEMBLY REQUIRED FOR EACH SCAN POINT OR DISTRIBUTE POINT CIRCUIT PACK LOCATED IN SG1 OF ANY SHELF IN A MODULAR METALLIC SERVICE UNIT (MMSU) CONNECTED TO A DF(SWC) SEE TABLE CE.			105								
CONNECTORIZED CABLE ASSEMBLY REQUIRED FOR EACH SCAN POINT OR DISTRIBUTE POINT CIRCUIT PACK LOCATED IN SG1 OF ANY SHELF IN A MODULAR METALLIC SERVICE UNIT (MMSU) CONNECTED TO A DF (711). SEE TABLE CE AND TBL A1. (89M1AE11-128 DF BLK).			105A								
CONNECTORIZED CABLE ASSEMBLY REQUIRED FOR EACH SCAN POINT OR DISTRIBUTE POINT CIRCUIT PACK LOCATED IN SG1 OF ANY SHELF IN A MODULAR METALLIC SERVICE UNIT (MMSU) CONNECTED TO A DF (TRW). SEE TABLE CE AND TBL A1. (89M1CE21-128 DF BLK).			105B								
CONNECTORIZED SWITCHBOARD CABLE ASSEMBLIES (MTIB) REQUIRED FROM EACH SUCCEEDING (MSU),(MMSU) OR (CSU) IN A MULTI-MSU OFFICE (SEE NOTE 74).			106								
CONNECTORIZED SWITCHBOARD CABLE ASSEMBLY REQUIRED FOR PORT 15 OF EACH PAIR OF METALLIC ACCESS CIRCUIT PACKS (TN138) INSTALLED IN THE MODULAR METALLIC SERVICE UNIT (MMSU) CONNECTED TO A DF (SWC) WHEN USED AS A METALLIC TEST BUS (SEE TABLE CC).		DA	107								
CONNECTORIZED CABLE ASSEMBLY REQUIRED TO PROVIDE ONE METALLIC TEST BUS (MTB) FROM THE MODULAR METALLIC SERVICE UNIT (MMSU) OR COMBINR SERVICE UNIT (CSU) PORTS 0 THRU 14 OF SERVICE GROUP 0 OR 1 TO THE DF (SEE TABLE CF & NOTE 81).			109								
CONNECTORIZED SWBD CABLE ASSEMBLY REQUIRED TO PROVIDE TWO METALLIC TEST BUSES (MTB) FROM THE MODULAR METALLIC SERVICE UNIT (MMSU) OR COMBINE SERVICE UNIT (CSU) PORTS O THRU 14 OF SERVICE GROUP 0 OR 1 TO THE DF. (UNIVERSAL SLC 96 ONLY). (SEE TBL CF1).			109A								
CONNECTORIZED SWBD CABLE ASSEMBLY REQUIRED FOR EACH MLT2 LOCATED IN SG0 OR SG1 OF ANY SHELF IN A MODULAR METALLIC SERVICE UNIT (MMSU) CONNECTED TO A DF (SWC).			110								
CONNECTORIZED CABLE ASSEMBLIES REQUIRED FOR EACH TRUNK UNIT (J5D003AC) OR ANALOG TRUNK UNIT-EXPORT (J5D003AG) INSTALLED IN A SWITCHING MODULE CONNECTED TO A DF E/W 711 CONN (SEE FIG.A AND NOTE 90). SEE TBL A1 FOR DF BLKS.			120								
CONNECTORIZED CABLE ASSEMBLIES REQUIRED FOR EACH TRUNK UNIT (J5D003AC) OR ANALOG TRUNK UNIT-EXPORT (J5D003AG) INSTALLED IN A SWITCHING MODULE CONNECTED TO A DF (SWC) (SEE FIG.A1 AND NOTE 90). SEE TBL A1 FOR DF BLKS.			120A								

TABLE-A CONTINUED

TABLE A-FEATURES(CONTINUED)

EQUIPMENT				EQUIPMENT OR CIRCUIT DATA						SD EQUIVALENT		
DESCRIPTION	REF NOTE	RAT-ING	LIST OR GROUP	QTY	EQUIPMENT OR CIRCUIT	L/G OR FIG	WRG	APP	SCHEMATIC	FIG	OPT
CONNECTORIZED CABLE ASSEMBLIES REQUIRED FOR EACH TRUNK UNIT (J5D003AC) OR ANALOG TRUNK UNIT-EXPORT. (J5D003AG) INSTALLED IN A SWITCHING MODULE CONNECTED TO A DF E/W 711 CONN (89M DF BLK ONLY). (SEE FIG. T AND NOTE 90).			121								
CONNECTORIZED CABLE ASSEMBLIES REQUIRED FOR EACH TRUNK UNIT (J5D003AC) OR ANALOG TRUNK UNIT-EXPORT. (J5D003AG) INSTALLED IN A SWITCHING MODULE CONNECTED TO A DF E/W 89M DF BLK (TRW CONN). (SEE FIG. T AND NOTE 90).			121B								
CONNECTORIZED CABLE ASSEMBLY REQUIRED FOR EACH TRUNK UNIT (J5D003AC) OR ANALOG TRUNK UNIT-EXPORT (J5D003AG) INSTALLED IN A SWITCHING MODULE WHEN THE METALLIC TEST BUS (MTB) IS DIRECTLY INTERCONNECTED TO A MODULAR METALLIC SERVICE UNIT (MMSU) LOCATED IN ANOTHER LTP AND ASSIGNED TO PORTS 0-7 (SEE TABLE CC AND NOTE 73).			122								
CONNECTORIZED SWBD CABLE ASSEMBLY REQUIRED IN ADDITION TO G122 FOR ATU-E (J5D003AG) WHEN SN560 TLTT (TAIWAN LINE TEST TRUNK) CP IS SPECIFIED. MTB IS DIRECTLY INTERCONNECTED TO A MODULAR METALLIC SERVICE UNIT (MMSU) LOCATED IN ANOTHER LTP AND ASSIGNED TO PORTS 0-7. (SEE TBL CC AND NOTE 73).			122A								
CONNECTORIZED CABLE ASSEMBLY REQUIRED FOR EACH TRUNK UNIT (J5D003AC) OR ANALOG TRUNK UNIT-EXPORT (J5D003AG) INSTALLED IN A SWITCHING MODULE WHEN THE METALLIC TEST BUS (MTB) IS DIRECTLY INTERCONNECTED TO A MODULAR METALLIC SERVICE UNIT (MMSU) LOCATED IN ANOTHER LTP AND ASSIGNED TO PORTS 8-14 (SEE TABLE CC & NOTE 73).			123								
CONNECTORIZED SWBD CABLE ASSEMBLY REQUIRED IN ADDITION TO G123 FOR ATU-E (J5D003AG) WHEN SN560 TLTT (TAIWAN LINE TEST TRUNK) CP IS SPECIFIED. MTB IS DIRECTLY INTERCONNECTED TO A MODULAR METALLIC SERVICE UNIT (MMSU) LOCATED IN ANOTHER LTP AND ASSIGNED TO PORTS 8-14. (SEE TBL CC AND NOTE 73).			123A								

TABLE-A CONTINUED

COPYRIGHT @ 2001 LUCENT TECHNOLOGIES
ALL RIGHTS RESERVED

BT13

INTERCABINET CABLING
FOR
5ESS * SWITCH
*LUCENT TRADEMARK

DWG SIZE C2 | ISSUE 117

PRINTED IN U.S.A.

TABLE A-FEATURES(CONTINUED)

EQUIPMENT				EQUIPMENT OR CIRCUIT DATA					SD EQUIVALENT		
DESCRIPTION	REF NOTE	RAT-ING	LIST OR GROUP	QTY	EQUIPMENT OR CIRCUIT	L/G OR FIG	WRG	APP	SCHEMATIC	FIG	OPT
CONNECTORIZED CABLE ASSEMBLY REQUIRED FOR EACH TEST TRUNK CIRCUIT PACK SN107 INSTALLED IN A TRUNK UNIT (J5D003AC) OR ANALOG TRUNK UNIT-EXPORT (J5D003AG) WHEN THE METALLIC TEST BUS (MTB) IS INTERCONNECTED TO THE MODULAR METALLIC SERVICE UNIT (MMSU) LOCATED IN ANOTHER LTP AND ASSIGNED TO PORTS 0-7 (SEE TABLE CC & NOTE 73 AND 86).			124								
CONNECTORIZED CABLE ASSEMBLY REQUIRED FOR EACH TEST TRUNK CIRCUIT PACK SN107 INSTALLED IN A TRUNK UNIT (J5D003AC) OR ANALOG TRUNK UNIT-EXPORT (J5D003AG) WHEN THE METALLIC TEST BUS (MTB) IS INTERCONNECTED TO THE MODULAR METALLIC SERVICE UNIT (MMSU) LOCATED IN ANOTHER LTP AND ASSIGNED TO PORTS 8-14 (SEE TABLE CC & NOTE 73 AND 86).			125								
CONNECTORIZED SWBD CABLE ASSEMBLY REQUIRED FOR EACH ANALOG TRUNK UNIT-EXPORT (J5D003AG) TO PROVIDE +48V PWR. MAX. LENGTH OF 150';SEE TBL-DD FOR FUSE ASGNMT; SEE G127 FOR LENGTH OVER 150'. DA EFF:05/07/96 FE/RA:NONE		DA	126								
CONNECTORIZED SWBD CABLE ASSEMBLY REQUIRED FOR EACH ANALOG TRUNK UNIT-EXPORT (J5D003AG) TO PROVIDE +48V POWER,LENGTH OVER 150';(SEE TBL DD FOR FUSE ASGNMT). DA EFF:05/07/96 FE/RA:NONE		DA	127								
CONNECTORIZED SWBD CABLE ASSEMBLY REQUIRED WHEN J5D005C-1,L11 IS SPECIFIED TO PROVIDE A QUIET GROUND FROM CONV PNL 0 TO GROUND WINDOW.			128								
BULK SWITCHBOARD CABLE REQUIRED IN ADDITION TO G128 TO PROVIDE SC PTS FOR FUSE ALARM FOR +48V SUPPLY.	199		128A								
CONNECTORIZED SWBD CABLE ASSEMBLY REQUIRED FOR ATU-E (J5D003AG) INSTALLED IN A SWITCHING MODULE CONNECTED TO A DF (SWC), WHEN G129A OR G129B (DATA PORTS CP TN1505) IS PROVIDED. (T,R,T1,R1 AND E,SG,M, SB CABLES).			129								
CONNECTORIZED SWBD CABLE ASSEMBLY REQUIRED FOR ANALOG TRUNK UNIT EXPORT (J5D003AG) WHEN EQUIPPED WITH DATA PORTS CP (TN1505) CONNECTED TO A DS ( ). (FOR ONE V.35 LINE).			129A								
CONNECTORIZED SWBD CABLE ASSEMBLY REQUIRED FOR ANALOG TRUNK UNIT-EXPORT J5D003AG WHEN EQUIPPED WITH DATA PORTS CP (TN 1505) CONNECTED TO A DS( ). (FOR ONE V.24 LINE).			129B								
CONNECTORIZED SWITCHBOARD CABLE ASSEMBLY REQUIRED TO INTERCONNECT DATA SET MTG TO DF. (1 MODEM ONLY). V.24 EXPORT ONLY.			129C								
CONNECTORIZED SWITCHBOARD CABLE ASSEMBLY REQUIRED IN ADDITION TO GROUP 129A TO INTERCONNECT DATA SET MOUNTING J3F010HA-1 TO DF. (E/W Z108A2 DMTG). V.35 EXPORT ONLY.			129D								

TABLE-A CONTINUED

TABLE A-FEATURES(CONTINUED)

EQUIPMENT				EQUIPMENT OR CIRCUIT DATA					SD EQUIVALENT		
DESCRIPTION	REF NOTE	RAT-ING	LIST OR GROUP	QTY	EQUIPMENT OR CIRCUIT	L/G OR FIG	WRG	APP	SCHEMATIC	FIG	OPT
CONNECTORIZED SWBD CABLE ASSEMBLY REQUIRED FOR DATA SET MTG (PARADYNE MOTHER BOARD TYPICAL) FOR WIRING UP TO 16 MODEMS TO DF.			129E								
CONNECTORIZED SWBD CABLE ASSEMBLY REQUIRED FOR A F/F ALARM EQUIPMENT IN A DATA SET CABINET-EXPORT (J5X099A-1).			129F								
CONNECTORIZED CABLE ASSEMBLIES REQUIRED FOR EACH DIGITAL LINE TRUNK UNIT (J5D003AD-1) INSTALLED IN A SWITCHING MODULE. (SEE FIG. B). OVER 450 FT. TO 655 FT. MAX.			130								
CONNECTORIZED CABLE ASSEMBLIES REQUIRED FOR EACH DIGITAL LINE TRUNK UNIT (DLTU) (J5D003AD-2) INSTALLED IN A SWITCHING MODULE. (SEE FIG. B1). OVER 450 FT. TO 655 FT. MAX.			130A								
CONNECTORIZED SWBD CABLE ASSEMBLIES REQUIRED FOR EACH DIGITAL LINE TRUNK UNIT (J5D003AD-1) INSTALLED IN A SWITCHING MODULE WHEN MAX REQUIRED CABLE LENGTH IS 450 FT. (SEE GROUP 130 FOR LENGTH OVER 450 FT. AND MAX 655 FT). (CA E/W KS CONN).			130B								
CONNECTORIZED SWBD CABLE ASSEMBLIES REQUIRED FOR EACH DIGITAL LINE TRUNK UNIT (J5D003AD-2) INSTALLED IN A SWITCHING MODULE WHEN MAX REQUIRED CABLE LENGTH IS 450 FT. (SEE GROUP 130A FOR LENGTH OVER 450 FT. AND MAX 655 FT). (CA E/W FASTECH CONN).			130C								
CONNECTORIZED CABLE ASSEMBLY REQUIRED FOR EACH DLTU-E (J5D003BA-1) EQUIPPED WITH LIST 1 ONLY.			131								
CONNECTORIZED CABLE ASSEMBLY REQUIRED FOR EACH DLTU-E (1 CKT) (J5D003BA-1)(UNSHIELDED 800 TYPE CA WITH 963T CONN TERMINATING ON DFI'S.			131A								
CONNECTORIZED CABLE ASSEMBLY REQUIRED FOR EACH DLTU-E (J5D003BA-1) EQUIPPED WITH LIST 1 & 2.			132								
CONNECTORIZED CABLE ASSEMBLY REQUIRED FOR EACH DLTU-E (1 CKT) (J5D003BA-1) (SHIELDED 1249A TYPE CA WITH 963T CONN TERMINATING ON DFI'S.			132A								
CONNECTORIZED COAXIAL CABLE ASSEMBLIES REQUIRED FOR EACH DFI IN DLTU-E (J5D003BA-1) EQUIPPED WITH LIST 3 OR 4.			133								

TABLE-A CONTINUED

COPYRIGHT @ 2001 LUCENT TECHNOLOGIES
ALL RIGHTS RESERVED

BT13

INTERCABINET CABLING
FOR
5ESS * SWITCH
*LUCENT TRADEMARK

DWG SIZE C2 | ISSUE 117

LUCENT TECHNOLOGIES INC | ED5D500-21 | SHEET A22 OF 292

PRINTED IN U.S.A.

TABLE A-FEATURES(CONTINUED)

EQUIPMENT				EQUIPMENT OR CIRCUIT DATA					SD EQUIVALENT		
DESCRIPTION	REF NOTE	RAT-ING	LIST OR GROUP	QTY	EQUIPMENT OR CIRCUIT	L/G OR FIG	WRG	APP	SCHEMATIC	FIG	OPT
CONNECTORIZED 735A COAXIAL CABLE ASSEMBLIES REQUIRED FOR EACH DFI IN DLTU-E(J5D003BA-1) EQUIPPED L3 ORL4 TERMINATING ON A DSX FR REQUIRING 4MM TERMINATION. EXPORT APPLICATION ONLY.			133A								
CONNECTORIZED 735A COAXIAL CABLE ASSEMBLIES REQUIRED FOR EACH DFI IN DLTU-E(J5D003BA-1) (1 CKT) TERMINATING ON A DSX FR REQUIRING 4MM TERMINATION EXPORT APPLICATION ONLY. (982 TYPE CONN TERMINATING AT DFI'S.			133B								
CONNECTORIZED KS19224L1 COAXIAL CABLE ASSEMBLIES REQUIRED FOR EACH DFI IN DLTU-E(J5D003BA-1) (1 CKT) TERMINATING ON A DSX FR REQUIRING 2.5MM TERMINATION EXPORT APPLICATION ONLY. (982 TYPE CONN TERMINATING AT DFI'S.			133C								
CONNECTORIZED CABLE ASSEMBLIES REQUIRED FOR EACH DIGITAL CARRIER LINE UNIT (DCLU) (J5D003AR-1) INSTALLED IN A SWITCHING MODULE. (SEE FIG. B). OVER 450 FT. TO 655 FT. MAX.			134								
CONNECTORIZED CABLE ASSEMBLIES REQUIRED FOR EACH DIGITAL CARRIER LINE UNIT (DCLU) (J5D003AR-2) INSTALLED IN A SWITCHING MODULE. (SEE FIG. B1). OVER 450 FT. TO 655 FT. MAX.			134A								
CONNECTORIZED SWBD CABLE ASSEMBLIES REQUIRED FOR EACH DIGITAL CARRIER LINE UNIT (J5D003AR-1) INSTALLED IN A SWITCHING MODULE WHEN MAX REQUIRED CABLE LENGTH IS 450 FT. (SEE GROUP 134 FOR LENGTH OVER 450 FT. AND MAX 655 FT). (CA E/W KS CONN).			134B								
CONNECTORIZED SWBD CABLE ASSEMBLIES REQUIRED FOR EACH DIGITAL CARRIER LINE UNIT (J5D003AR-2) INSTALLED IN A SWITCHING MODULE WHEN MAX REQUIRED CABLE LENGTH IS 450 FT. (SEE GROUP 134A FOR LENGTH OVER 450 FT. AND MAX 655 FT). (CA E/W FASTECH CONN).			134C								
CONNECTORIZED CABLE ASSEMBLIES REQUIRED FOR EACH SUPPLEMENTARY DIGITAL CARRIER LINE UNIT (DCLU) (J5D003AS-1) INSTALLED IN A SWITCHING MODULE. (SEE FIG. B). OVER 450 FT. TO 655 FT. MAX.			135								
CONNECTORIZED CABLE ASSEMBLIES REQUIRED FOR EACH SUPPLEMENTARY DIGITAL CARRIER LINE UNIT (DCLU) (J5D003AS-2) INSTALLED IN A SWITCHING MODULE. (SEE FIG. B1). OVER 450 FT. TO 655 FT. MAX.			135A								
CONNECTORIZED SWBD CABLE ASSEMBLIES REQUIRED FOR EACH SUPPLEMENTARY DIGITAL CARRIER LINE UNIT (J5D003AS-1) INSTALLED IN A SWITCHING MODULE WHEN MAX REQUIRED CABLE LENGTH IS 450 FT. (SEE GROUP 135 FOR LENGTH OVER 450 FT. AND MAX 655 FT). (CA E/W KS CONN).			135B								

TABLE-A CONTINUED

TABLE A-FEATURES(CONTINUED)

EQUIPMENT				EQUIPMENT OR CIRCUIT DATA					SD EQUIVALENT		
DESCRIPTION	REF NOTE	RAT-ING	LIST OR GROUP	QTY	EQUIPMENT OR CIRCUIT	L/G OR FIG	WRG	APP	SCHEMATIC	FIG	OPT
CONNECTORIZED SWBD CABLE ASSEMBLIES REQUIRED FOR EACH SUPPLEMENTARY DIGITAL CARRIER LINE UNIT (J5D003AS-2) INSTALLED IN A SWITCHING MODULE WHEN MAX REQUIRED CABLE LENGTH IS 450 FT. (SEE GROUP 135A FOR LENGTH OVER 450 FT. AND MAX 655 FT). (CA E/W FASTECH CONN).			135C								
CONNECTORIZED CABLE ASSEMBLY REQUIRED FOR A RSM,MMRSM,TRM OR ORM SWITCHING MODULE FOR THE COMMUNICATION BUS CIRCUIT CONNECTION TO A DF(SWC); (TEL A & A1,SP,TTY A & B). (ORDER ONE GROUP PER MMRSM).			137								
CONNECTORIZED CABLE ASSEMBLY REQUIRED FOR A RSM, MMRSM, TRM OR ORM SWITCHING MODULE (E/W MODULAR FUSE/FILTER PNL, (J5D003FJ)) FOR THE COMMUNICA-TION BUS CIRCUIT CONNECTION TO A DF (SWC), (TEL A & A1, SP, TTY-A, TTY-B). (ORDER ONE GROUP PER MMRSM).			137A								
CONNECTORIZED SWBD CABLE ASSEMBLIES REQUIRED FOR IDCU INSTALLED IN A SWITCHING MODULE TO DSX (1249-020C) FE:ED5D621-11,G138 DA EFF:07/31/92		DA	138								
CONNECTORIZED SWBD CABLE ASSEMBLIES REQUIRED FOR IDCU INSTALLED IN A SWITCHING MODULE TO DSX (607C) FE:ED5D621-11,G139 DA EFF:07/31/91		DA	139								
CONNECTORIZED SWBD CABLE ASSEMBLY FOR EACH PMU INSTALLED IN A SWITCHING MODULE AND CONNECTED TO THE DF. REQUIRED FOR FLEXIBLE ASSIGNMENT OF DCTU PORTS TO MMSU SHELVES TO IMPROVE METALLIC ACCESS. REPL:NONE			140								
CONNECTORIZED SWBD CABLE ASSEMBLY FOR A ONE TO FOUR SHELF MODULAR METALLIC SERVICE UNIT (MMSU) CONNECTED TO A DF FOR FLEXIBLE ASSIGNMENT OF DCTU PORTS TO MMSU SHELVES TO IMPROVE METALLIC ACCESS. REPL:NONE			140A								
CONNECTORIZED SWBD CABLE ASSEMBLY FOR A ONE TO FOUR MODULAR METALLIC SERVICE UNIT (MMSU) CONNECTED DIRECTLY TO A PRECISION MEASURING UNIT (PMU) FOR FLEXIBLE ASSIGNMENT OF DCTU PORTS TO MMSU SHELVES TO IMPROVE METALLIC ACCESS. REPL:NONE			140B								

TABLE-A CONTINUED

COPYRIGHT @ 2001 LUCENT TECHNOLOGIES
ALL RIGHTS RESERVED

BT13

INTERCABINET CABLING
FOR
5ESS * SWITCH
*LUCENT TRADEMARK

DWG SIZE C2 | ISSUE 117

LUCENT TECHNOLOGIES INC | ED5D500-21 | SHEET A23 OF 292

PRINTED IN U.S.A.

TABLE A-FEATURES(CONTINUED)

EQUIPMENT				EQUIPMENT OR CIRCUIT DATA						SD EQUIVALENT		
DESCRIPTION	REF NOTE	RAT-ING	LIST OR GROUP	QTY	EQUIPMENT OR CIRCUIT	L/G OR FIG	WRG	APP	SCHEMATIC	FIG	OPT
CONNECTORIZED CABLE ASSEMBLY REQUIRED FOR EACH PMU INSTALLED IN A SWITCHING MODULE WHEN THE METALLIC TEST BUS(MTB) IS DIRECTLY INTERCONNECTED TO A MODULAR METALLIC SERVICE UNIT (MMSU) LOCATED IN ANOTHER LTP AND ASSIGNED TO PORTS 0-7 (SEE TABLE CC AND NOTE 73). DA EFF:03/28/97 FE:ED5D500-21,G141A		DA	141									
CONNECTORIZED CABLE ASSEMBLY REQUIRED FOR EACH PMU INSTALLED IN A SWITCHING MODULE WHEN THE METALLIC TEST BUS (MTB) IS DIRECTLY INTERCONNECTED TO TWO VERTICALY ADJACENT SHELFS OF THE MODULAR METALLIC SERVICE UNIT (MMSU) LOCATED IN ANOTHER LTP AND ASSIGNED TO PORTS 0-7 (SEE TABLE CC1).			141A									
CONNECTORIZED CABLE ASSEMBLY REQUIRED FOR EACH PMU INSTALLED IN A SWITCHING MODULE WHEN THE METALLIC TEST BUS(MTB) IS DIRECTLY INTERCONNECTED TO A MODULAR METALLIC SERVICE UNIT (MMSU) LOCATED IN ANOTHER LTP AND ASSIGNED TO PORTS 8-14 (SEE TABLE CC & NOTE 73). DA EFF:03/28/97 FE:ED5D500-21,G142A		DA	142									
CONNECTORIZED CABLE ASSEMBLY REQUIRED FOR EACH PMU INSTALLED IN A SWITCHING MODULE WHEN THE METALLIC TEST BUS (MTB) IS DIRECTLY INTERCONNECTED TO TWO VERTICALY ADJACENT SHELFS OF THE MODULAR METALLIC SERVICE UNIT (MMSU) LOCATED IN ANOTHER LTP AND ASSIGNED TO PORTS 8-14 (SEE TABLE CC1).			142A									
CONNECTORIZED CABLE ASSEMBLY REQUIRED FOR QUIET GROUND FROM THE DIRECTLY CONNECTED TEST UNIT (DCTU) CONTROL CIRCUIT, WHEN THE METALLIC TEST BUS (MTB) IS CABLED TO THE MODULAR METALLIC SERVICE UNIT (MMSU).			143									
CONNECTORIZED SWBD CABLE ASSEMBLIES REQUIRED FOR EACH DIGITAL LINE TRUNK UNIT MOD 2 (J5D024AA-1) INSTALLED IN A SWITCHING MODULE WHEN REQUIRED CABLE LENGTH IS OVER 450 FT. AND MAX 655FT. SEE GROUP 145A WHEN MAX CA LENGTH IS 450 FT. (20 DFI'S).			145									
CONNECTORIZED SWBD CABLE ASSEMBLIES REQUIRED FOR EACH DIGITAL LINE TRUNK UNIT MOD 2 (J5D024AA-1) INSTALLED IN A SWITCHING MODULE WHEN MAX REQUIRED CABLE LENGTH IS 450 FT. (20 DFI'S).			145A									
CONNECTORIZED SWBD CABLE ASSEMBLIES REQUIRED FOR EACH DIGITAL LINE TRUNK UNIT MOD 2 (J5D024AA-1) INSTALLED IN A SWITCHING MODULE WHEN MAX REQUIRED CABLE LENGTH IS 440 FT. (DFI'S 1,5 AND 9).			145B									
CONNECTORIZED SWBD CABLE ASSEMBLIES REQUIRED FOR EACH DIGITAL LINE TRUNK UNIT MOD 2 (J5D024AA-1) INSTALLED IN A SWITCHING MODULE WHEN MAX REQUIRED CABLE LENGTH IS 440 FT. (DFI'S 4 AND 8).			145C									

TABLE-A CONTINUED

TABLE A-FEATURES(CONTINUED)

EQUIPMENT				EQUIPMENT OR CIRCUIT DATA						SD EQUIVALENT		
DESCRIPTION	REF NOTE	RAT-ING	LIST OR GROUP	QTY	EQUIPMENT OR CIRCUIT	L/G OR FIG	WRG	APP	SCHEMATIC	FIG	OPT
CONNECTORIZED SWBD CABLE ASSEMBLIES REQUIRED FOR EACH DIGITAL LINE TRUNK UNIT MOD 2 (J5D024AA-1) INSTALLED IN A SWITCHING MODULE WHEN MAX REQUIRED CABLE LENGTH IS 440 FT. (DFI'S 2,6 AND 10).			145D									
CONNECTORIZED SWBD CABLE ASSEMBLIES REQUIRED FOR EACH DIGITAL LINE TRUNK UNIT MOD 2 (J5D024AA-1) INSTALLED IN A SWITCHING MODULE WHEN MAX REQUIRED CABLE LENGTH IS 440 FT. (DFI'S 3 AND 7).			145E									
CONNECTORIZED SWBD CABLE ASSEMBLIES REQUIRED FOR EACH DIGITAL LINE TRUNK UNIT MOD 2 (J5D024AA-1) INSTALLED IN A SWITCHING MODULE WHEN REQUIRED CABLE LENGTH IS OVER 440 FT. AND MAX 655 FT. (DFI'S 1,5 AND 9).			145F									
CONNECTORIZED SWBD CABLE ASSEMBLIES REQUIRED FOR EACH DIGITAL LINE TRUNK UNIT MOD 2 (J5D024AA-1) INSTALLED IN A SWITCHING MODULE WHEN REQUIRED CABLE LENGTH IS OVER 440 FT. AND MAX 655 FT. (DFI'S 4 AND 8).			145G									
CONNECTORIZED SWBD CABLE ASSEMBLIES REQUIRED FOR EACH DIGITAL LINE TRUNK UNIT MOD 2 (J5D024AA-1) INSTALLED IN A SWITCHING MODULE WHEN REQUIRED CABLE LENGTH IS OVER 440 FT. AND MAX 655 FT. (DFI'S 2,6 AND 10).			145H									
CONNECTORIZED SWBD CABLE ASSEMBLIES REQUIRED FOR EACH DIGITAL LINE TRUNK UNIT MOD 2 (J5D024AA-1) INSTALLED IN A SWITCHING MODULE WHEN REQUIRED CABLE LENGTH IS OVER 440 FT. AND MAX 655 FT. (DFI'S 3 AND 7).			145J									
CONNECTORIZED SWBD CABLE ASSEMBLIES REQUIRED FOR THREE DIGITAL LINE TRUNK UNITS MOD 2 (STACKED)(J5D024AA-1) INSTALLED IN A SWITCHING MODULE. (X-DIM W/ A MAX LENGTH OF 655FT) (60 DFI'S).			145K									
CONNECTORIZED SWBD CABLE ASSEMBLIES REQUIRED FOR EACH DIGITAL LINE TRUNK UNIT MOD 3 (J5D003FN-1) INSTALLED IN A SWITCHING MODULE WHEN REQUIRED CABLE LENGTH IS OVER 450 FT. AND MAX 655FT. SEE GROUP 146A (24CH) OR GROUP 146B (30CH) WHEN MAX CA LENGTH IS 450 FT. (DFI'S 1-10).			146									

TABLE-A CONTINUED

COPYRIGHT @ 2001 LUCENT TECHNOLOGIES
ALL RIGHTS RESERVED

BT13

INTERCABINET CABLING
FOR
5ESS * SWITCH
*LUCENT TRADEMARK

DWG SIZE C2 | ISSUE 117

LUCENT TECHNOLOGIES INC | ED5D500-21 | SHEET A24 OF 292

PRINTED IN U.S.A.

TABLE A-FEATURES(CONTINUED)

EQUIPMENT				EQUIPMENT OR CIRCUIT DATA						SD EQUIVALENT		
DESCRIPTION	REF NOTE	RAT-ING	LIST OR GROUP	QTY	EQUIPMENT OR CIRCUIT	L/G OR FIG	WRG	APP	SCHEMATIC	FIG	OPT
CONNECTORIZED SWBD CABLE ASSEMBLIES REQUIRED FOR EACH DIGITAL LINE TRUNK UNIT MOD 3 (J5D003FN-1) INSTALLED IN A SWITCHING MODULE WHEN MAX REQUIRED CABLE LENGTH IS 450 FT. (DFI'S 1-10). (24 CHANNEL)			146A								
CONNECTORIZED SWBD CABLE ASSEMBLIES REQUIRED FOR EACH DIGITAL LINE TRUNK UNIT MOD 3 (J5D003FN-1) INSTALLED IN A SWITCHING MODULE WHEN MAX REQUIRED CABLE LENGTH IS 450 FT. (DFI'S 1-10). (30 CHANNEL)			146B								
CONNECTORIZED SWBD CABLE ASSEMBLIES REQUIRED FOR EACH DIGITAL LINE TRUNK UNIT MOD 3, DLTU3 (J5D003FN-1) OR COMBINE SERVICE UNIT,CSU (J5D003FS) INSTALLED IN A SWITCHING MODULE WHEN REQUIRD CABLE LENGTH IS OVER 450 FT. AND MAX 655FT. SEE GROUP 146D (24CH) OR GROUP 146E (30CH) WHEN MAX CA LENGTH IS 450 FT. (DFI'S 1-5).			146C								
CONNECTORIZED SWBD CABLE ASSEMBLIES REQUIRED FOR EACH DIGITAL LINE TRUNK UNIT MOD 3, DLTU3 (J5D003FN-1) OR COMBINE SERVICE UNIT,CSU (J5D003FS) INSTALLED IA A SWITCHING MODULE WHEN MAX REQUIRED CABLE LENGTH IS 450 FT. (DFI'S 1-5).(24 CHN/100-OHMS)			146D								
CONNECTORIZED SWBD CABLE ASSEMBLIES REQUIRED FOR EACH DIGITAL LINE TRUNK UNIT MOD 3, DLTU3 (J5D003FN-1) OR COMBINE SERVICE UNIT,CSU (J5D003FS) INSTALLED IN A SWITCHING MODULE WHEN MAX REQUIRED CABLE LENGTH IS 450 FT. (DFI'S 1-5).(30 CHN/120-OHMS)			146E								
CONNECTORIZED SWBD CABLE ASSEMBLIES REQUIRED FOR EACH DIGITAL LINE TRUNK UNIT MOD 3 (J5D003FN-1) INSTALLED IN A SWITCHING MODULE WHEN REQUIRED CABLE LENGTH IS OVER 450 FT. AND MAX 655FT. SEE GROUP 147A (24CH) OR GROUP 147B (30CH) WHEN MAX CA LENGTH IS 450 FT. (DFI'S 11-20)			147								
CONNECTORIZED SWBD CABLE ASSEMBLIES REQUIRED FOR EACH DIGITAL LINE TRUNK UNIT MOD 3 (J5D003FN-1) INSTALLED IN A SWITCHING MODULE WHEN MAX REQUIRED CABLE LENGTH IS 450 FT. (DFI'S 11-20). (24 CHANNEL)			147A								
CONNECTORIZED SWBD CABLE ASSEMBLIES REQUIRED FOR EACH DIGITAL LINE TRUNK UNIT MOD 3 (J5D003FN-1) INSTALLED IN A SWITCHING MODULE WHEN MAX REQUIRED CABLE LENGTH IS 450 FT. (DFI'S 11-20). (30 CHANNEL)			147B								
CONNECTORIZED 735A COAXIAL CABLE ASSEMBLIES REQUIRED FOR EACH DFI CKT IN DLTU-3(J5D003FN-1) OR CSU (J5D003FS) TERMINATING ON A DSX FR REQUIRING 4MM TERMINATION WITH SINGLE POINT GRD.			148								

TABLE-A CONTINUED

TABLE A-FEATURES(CONTINUED)

EQUIPMENT				EQUIPMENT OR CIRCUIT DATA						SD EQUIVALENT		
DESCRIPTION	REF NOTE	RAT-ING	LIST OR GROUP	QTY	EQUIPMENT OR CIRCUIT	L/G OR FIG	WRG	APP	SCHEMATIC	FIG	OPT
CONNECTORIZED 735A COAXIAL CABLE ASSEMBLIES REQUIRED FOR EACH DFI CKT IN DLTU-3(J5D003FN-1) TERMINATING ON A DSX FR REQUIRING 4MM TERMINATION WITH MESH GRD.		NRTO	148A								
CONNECTORIZED 735A COAXIAL CABLE ASSEMBLIES REQUIRED FOR EACH DFI CKT IN DLTU-3(J5D003FN-1) TERMINATING ON A DSX FR REQUIRING 4MM TERMINATION WITH SINGLE POINT GRD.(E/W 982ABC CONN AT ONE END,OTHER END BLANK)			148C								
CONNECTORIZED 735A COAXIAL CABLE ASSEMBLIES REQUIRED FOR EACH DFI CKT IN DLTU-3(J5D003FN-1) TERMINATING ON A DSX FR REQUIRING 4MM TERMINATION WITH MESH GRD.(E/W 982ABD CONN AT ONE END,OTHER END BLANK)			148D								
CONNECTORIZED 735A COAXIAL CABLE ASSEMBLIES REQUIRED FOR EACH DFI CKT IN DLTU-3(J5D003FN-1) OR CSU (J5D003FS) TERMINATING WITH BNC CONNECTOR ON A DSX FR REQUIRING 4MM TERMINATION WITH SINGLE POINT GRD. (INTERNATION APPLICATION ONLY)			148E								
CONNECTORIZED 1928B COAXIAL CABLE ASSEMBLIES REQ FOR 2 DFI CP IN DLTU-3(J5D003FN-1) TERMINATING WITH BNC CONNECTOR ON A DSX FR REQUIRING 4MM TERMINATION WITH SINGLE POINT GRD. (8 COND, PVC CABLE) (INTERNATIONAL APPLICATION ONLY) REPL:NONE			148F								
CONNECTORIZED 3928A COAXIAL CABLE ASSEMBLIES REQ FOR 2 DFI CP IN DLTU-3(J5D003FN-1) TERMINATING WITH BNC CONNECTOR ON A DSX FR REQUIRING 4MM TERMINATION WITH SINGLE POINT GRD. (8 COND, NON-PVC CABLE) (INTERNATIONAL APPLICATION ONLY) REPL:NONE		NRTO	148G								
CONNECTORIZED WP93875L6 COAXIAL CABLE ASSEMBLIES REQ FOR 4 DFI CP IN DLTU-3(J5D003FN-1) TERMINATING WITH BNC CONNECTOR ON A DSX FR REQUIRING 4MM TERMINATION WITH SINGLE POINT GRD. (16 COND, PVC CABLE) (INTERNATIONAL APPLICATION ONLY) REPL:NONE			148H								

TABLE-A CONTINUED

COPYRIGHT @ 2001 LUCENT TECHNOLOGIES
ALL RIGHTS RESERVED

BT13

INTERCABINET CABLING
FOR
5ESS * SWITCH
*LUCENT TRADEMARK

DWG SIZE C2 | ISSUE 117

PRINTED IN U.S.A.

TABLE A-FEATURES(CONTINUED)

EQUIPMENT				EQUIPMENT OR CIRCUIT DATA					SD EQUIVALENT		
DESCRIPTION	REF NOTE	RAT-ING	LIST OR GROUP	QTY	EQUIPMENT OR CIRCUIT	L/G OR FIG	WRG	APP	SCHEMATIC	FIG	OPT
CONNECTORIZED WP93875L36 COAXIAL CABLE ASSEMBLIES REQ FOR 4 DFI CP IN DLTU-3(J5D003FN-1) TERMINATING WITH BNC CONNECTOR ON A DSX FR REQUIRING 4MM TERMINATION WITH SINGLE POINT GRD. (16 COND, NON-PVC CABLE) (INTERNATIONAL APPLICATION ONLY) REPL:NONE		NRTO	148J								
CONNECTORIZED KS19224L1 COAXIAL CA ASSEMBLIES REQUIRED FOR EACH DFI CKT IN DLTU-3 (J5D003FN) OR CSU (J5D003FS) TERMINATING ON A DSX FR REQUIRING 2.5MM TERMINATION WITH SINGLE POINT GRD.			149								
CONNECTORIZED KS19224L1 COAXIAL CA ASSEMBLIES REQUIRED FOR EACH DFI CKT IN DLTU-3 (J5D003FN) TERMINATING ON A DSX FR REQUIRING 2.5MM TERMINATION WITH MESH GRD.		NRTO	149A								
CONNECTORIZED CABLE ASSEMBLY REQUIRED FOR EACH DLTU3 (J5D003FN-1) (UNSHIELDED 800 TYPE CA WITH 963T CONN TERMINATING ON DFI'S (1-10)			150								
CONNECTORIZED CABLE ASSEMBLY REQUIRED FOR EACH DLTU3 (J5D003FN-1) (UNSHIELDED 800 TYPE CA WITH 963T CONN TERMINATING ON DFI'S (11-20)			151								
CONNECTORIZED CABLE ASSEMBLY REQUIRED FOR EACH DLTU-E (2 CKT) (J5D003BA-1) (UNSHIELDED 800 TYPE CA WITH 963T CONN TERMINATING ON DFI'S (1-16) (CKT B ONLY).			152								
CONNECTORIZED CABLE ASSEMBLY REQUIRED FOR EACH DLTU-E (2 CKT) (J5D003BA-1) (SHIELDED 1249A TYPE CA WITH 963T CONN TERMINATING ON DFI'S (1-16) (CKT B ONLY).			152A								
CONNECTORIZED CABLE ASSEMBLY REQUIRED FOR EACH DLTU-E (2 CKT) (J5D003BA-1) (UNSHIELDED 800 TYPE CA WITH 963T CONN TERMINATING ON DFI'S (1-8) (CKT A & B)			153								
CONNECTORIZED CABLE ASSEMBLY REQUIRED FOR EACH DLTU-E (2 CKT) (J5D003BA-1) (SHIELDED 1249A TYPE CA WITH 963T CONN TERMINATING ON DFI'S (1-8) (CKT A & B).			153A								
CONNECTORIZED CABLE ASSEMBLY REQUIRED FOR EACH DLTU-E (2 CKT) (J5D003BA-1) (UNSHIELDED 800 TYPE CA WITH 963T CONN TERMINATING ON DFI'S (9-16) (CKT A & B).			154								
CONNECTORIZED CABLE ASSEMBLY REQUIRED FOR EACH DLTU-E (2 CKT) (J5D003BA-1) (SHIELDED 1249A TYPE CA WITH 963T CONN TERMINATING ON DFI'S (9-16) (CKT A & B).			154A								
CONNECTORIZED KS19224L1 COAXIAL CABLE ASSEMBLIES REQUIRED FOR EACH DFI IN DLTU-E(J5D003BA-1) (2 CKT) TERMINATING ON A DSX FR REQUIRING 2.5MM TERMINATION EXPORT APPLICATION ONLY. (982 TYPE CONN TERMINATING AT DFI'S.			155								

TABLE-A CONTINUED

TABLE A-FEATURES(CONTINUED)

EQUIPMENT				EQUIPMENT OR CIRCUIT DATA					SD EQUIVALENT		
DESCRIPTION	REF NOTE	RAT-ING	LIST OR GROUP	QTY	EQUIPMENT OR CIRCUIT	L/G OR FIG	WRG	APP	SCHEMATIC	FIG	OPT
CONNECTORIZED 735A COAXIAL CABLE ASSEMBLIES REQUIRED FOR EACH DFI IN DLTU-E(J5D003BA-1) (2 CKT) TERMINATING ON A DSX FR REQUIRING 4MM TERMINATION EXPORT APPLICATION ONLY. (982 TYPE CONN TERMINATING AT DFI'S.			155A								
CONNECTORIZED CABLE ASSEMBLIES REQUIRED IN ADDITION TO G180B IF CABLES FROM LNI ARE RUN TO DF E/W 711 CONN. (SEE FIG.A4). DA EFF:11/30/96 FE/RA:NONE		DA	156C								
BULK SWITCHBOARD CABLE REQUIRED IN ADDITION TO G180B IF CABLES FROM LNI ARE RUN TO DF ARRANGED FOR SWC. (SEE FIG.A4). DA EFF:11/30/96 FE/RA:NONE	199	DA	156D								
CONNECTORIZED CABLE ASSEMBLIES REQUIRED IN ADDITION TO G181B IF CABLES FROM LNI ARE RUN TO DF E/W 711 CONN. (SEE FIG.A4). DA EFF:11/30/96 FE/RA:NONE		DA	157C								
BULK SWITCHBOARD CABLE REQUIRED IN ADDITION TO G181B IF CABLES FROM LNI ARE RUN TO DF ARRANGED FOR SWC. (SEE FIG.A4). DA EFF:11/30/96 FE/RA:NONE	199	DA	157D								
CONNECTORIZED CABLE ASSEMBLIES REQUIRED IN ADDITION TO G182B IF CABLES FROM LNI ARE RUN TO DF E/W 711 CONN. (SEE FIG.A4). DA EFF:11/30/96 FE/RA:NONE		DA	158C								
BULK SWITCHBOARD CABLE REQUIRED IN ADDITION TO G182B IF CABLES FROM LNI ARE RUN TO DF ARRANGED FOR SWC. (SEE FIG.A4). DA EFF:11/30/96 FE/RA:NONE	199	DA	158D								
CONNECTORIZED SWBD CABLE ASSEMBLY REQUIRED IN ADDITION TO G186B IF CABLES FROM LNI ARE RUN TO DF E/W 711 CONN. (SEE FIG. A4). DA EFF:11/30/96 FE/RA:NONE		DA	159C								

TABLE-A CONTINUED

COPYRIGHT @ 2001 LUCENT TECHNOLOGIES
ALL RIGHTS RESERVED

BT13

INTERCABINET CABLING
FOR
5ESS * SWITCH
*LUCENT TRADEMARK

DWG SIZE C2 | ISSUE 117

PRINTED IN U.S.A.

TABLE A-FEATURES(CONTINUED)

EQUIPMENT				EQUIPMENT OR CIRCUIT DATA					SD EQUIVALENT		
DESCRIPTION	REF NOTE	RAT-ING	LIST OR GROUP	QTY	EQUIPMENT OR CIRCUIT	L/G OR FIG	WRG	APP	SCHEMATIC	FIG	OPT
BULK SWITCHBOARD CABLE REQUIRED IN ADDITION TO G186B IF CABLES FROM LNI ARE RUN TO DF ARRANGED FOR SWC. (SEE FIG. A4). DA EFF:11/30/96 FE/RA:NONE	199	DA	159D								
CONNECTORIZED CABLE ASSEMBLY REQUIRED FOR EACH LINE UNIT MOD 2 (J5D004AC),MOD3 (J5D004AD) OR LINE UNIT-EXPORT (J5D004AE) INSTALLED IN A SWITCHING MODULE WHEN THE METALLIC TEST BUS(MTB) IS DIRECTLY INTERCONNECTED TO A MODULAR METALLIC SERVICE UNIT (MMSU) LOCATED IN ANOTHER LTP AND ASSIGNED TO PORTS 0-7 (SEE TABLE CC AND NOTE 73). DA EFF:02/12/97 FE:ED5D500-21,G162		DA	160								
CONNECTORIZED CABLE ASSEMBLY REQUIRED FOR EACH LINE UNIT MOD4 (J5D004AN) INSTALLED IN A SWITCHING MODULE WHEN THE METALLIC TEST BUS(MTB) IS DIRECTLY INTERCONNECTED TO A MODULAR METALLIC SERVICE UNIT (MMSU) LOCATED IN ANOTHER LTP AND ASSIGNED TO PORTS 0-7 (SEE TABLE CC AND NOTE 73). DA EFF:03/24/95 FE/RA:NONE		DA	160A								
CONNECTORIZED CABLE ASSEMBLY REQUIRED FOR EACH LINE UNIT MOD 2 (J5D004AC),MOD3 (J5D004AD) OR LINE UNIT-EXPORT (J5D004AE) INSTALLED IN A SWITCHING MODULE WHEN THE METALLIC TEST BUS (MTB) IS DIRECTLY INTERCONNECTED TO A MODULAR METALLIC SERVICE UNIT (MMSU) LOCATED IN ANOTHER LTP AND ASSIGNED TO PORTS 8-14 (SEE TABLE CC & NOTE 73). DA EFF:02/12/97 FE:ED5D500-21,G162		DA	161								
CONNECTORIZED CABLE ASSEMBLY REQUIRED FOR EACH LINE UNIT MOD4 (J5D004AN) INSTALLED IN A SWITCHING MODULE WHEN THE METALLIC TEST BUS (MTB) IS DIRECTLY INTERCONNECTED TO A MODULAR METALLIC SERVICE UNIT (MMSU) LOCATED IN ANOTHER LTP AND ASSIGNED TO PORTS 8-14 (SEE TABLE CC & NOTE 73). DA EFF:03/24/95 FE/RA:NONE		DA	161A								
CONNECTORIZED CABLE ASSEMBLY REQUIRED FOR EACH LINE UNIT MOD 2 (J5D004AC),MOD3 (J5D004AD) OR LINE UNIT-EXPORT (J5D004AE) INSTALLED IN A SWITCHING MODULE WHEN THE METALLIC TEST BUS (MTB) IS DIRECTLY INTERCONNECTED TO A MODULAR METALLIC SERVICE UNIT (MMSU) LOCATED IN ANOTHER LTP OR SMC AND ASSIGNED TO PORTS 0-14 (SEE TABLE CC & NOTE 73). REPL:ED5D500-21,G160 REPL:ED5D500-21,G161			162								
CONNECTORIZED CABLE ASSEMBLIES REQUIRED FOR EACH PERIODIC PULSE METERING UNIT INSTALLED IN A SWITCHING MODULE CONNECTED TO A DF E/W 711 CONN (SEE FIG.C).			170								
CONNECTORIZED CABLE ASSEMBLIES REQUIRED FOR EACH PERIODIC PULSE METERING UNIT (J5D003AW-1) INSTALLED IN A SWITCHING MODULE CONNECTED TO A DF(SWC) (SEE FIG. C1).			170A								

TABLE-A CONTINUED

TABLE A-FEATURES(CONTINUED)

EQUIPMENT				EQUIPMENT OR CIRCUIT DATA					SD EQUIVALENT		
DESCRIPTION	REF NOTE	RAT-ING	LIST OR GROUP	QTY	EQUIPMENT OR CIRCUIT	L/G OR FIG	WRG	APP	SCHEMATIC	FIG	OPT
CONNECTORIZED CABLE ASSEMBLIES REQUIRED IN ADDITION TO GROUP 170 WHEN LNI IS CONNECTED TO A CONNECTORIZED DF E/W 711 CONNECTORS AND CROSS CONNECTED TO A LINE UNIT(J5D004AB,J5D004AC OR J5D004AE-EXPORT) ARRANGED FOR A CONCENTRATION RATIO OF 4:1. DA EFF:03/28/97 FE/RA:NONE		DA	175								
CONNECTORIZED CABLE ASSEMBLIES REQUIRED IN ADDITION TO GROUP 170A WHEN LNI IS CONNECTED TO A DF(SWC) AND CROSS CONNECTED TO A LINE UNIT(J5D004AB,J5D004AC OR J5D004AE-EXPORT) ARRANGED FOR A CONCENTRATION RATIO OF 4:1. DA EFF:03/28/97 FE/RA:NONE	199	DA	175A								
CONNECTORIZED CABLE ASSEMBLIES REQUIRED IN ADDITION TO GROUP 170 WHEN LNI IS CONNECTED TO A CONNECTORIZED DF E/W 711 CONNECTORS AND CROSS CONNECTED TO A LINE UNIT(J5D004AB,J5D004AC OR J5D004AE-EXPORT) ARRANGED FOR A CONCENTRATION RATIO OF 6:1. DA EFF:03/28/97 FE/RA:NONE		DA	176								
CONNECTORIZED CABLE ASSEMBLIES REQUIRED IN ADDITION TO GROUP 170A WHEN LNI IS CONNECTED TO A DF(SWC) AND CROSS CONNECTED TO A LINE UNIT(J5D004AB,J5D004AC OR J5D004AE-EXPORT) ARRANGED FOR A CONCENTRATION RATIO OF 6:1. DA EFF:03/28/97 FE/RA:NONE	199	DA	176A								
CONNECTORIZED CABLE ASSEMBLIES REQUIRED IN ADDITION TO GROUP 170 WHEN LNI IS CONNECTED TO A CONNECTORIZED DF E/W 711 CONNECTORS AND CROSS CONNECTED TO A LINE UNIT(J5D004AB,J5D004AC OR J5D004AE-EXPORT) ARRANGED FOR A CONCENTRATION RATIO OF 8:1. DA EFF:03/28/97 FE/RA:NONE		DA	177								
CONNECTORIZED CABLE ASSEMBLIES REQUIRED IN ADDITION TO GROUP 170A WHEN LNI IS CONNECTED TO A DF(SWC) AND CROSS CONNECTED TO A LINE UNIT(J5D004AB,J5D004AC OR J5D004AE-EXPORT) ARRANGED FOR A CONCENTRATION RATIO OF 8:1. DA EFF:03/28/97 FE/RA:NONE	199	DA	177A								

TABLE-A CONTINUED

COPYRIGHT @ 2001 LUCENT TECHNOLOGIES
ALL RIGHTS RESERVED

BT13

INTERCABINET CABLING
FOR
5ESS * SWITCH
*LUCENT TRADEMARK

DWG SIZE C2 | ISSUE 117

LUCENT TECHNOLOGIES INC | ED5D500-21 | SHEET A27 OF 292

PRINTED IN U.S.A.

TABLE A-FEATURES(CONTINUED)

EQUIPMENT DESCRIPTION	REF NOTE	RAT-ING	LIST OR GROUP	EQUIPMENT OR CIRCUIT DATA QTY	EQUIPMENT OR CIRCUIT	L/G OR FIG	WRG	APP	SD EQUIVALENT SCHEMATIC	FIG	OPT
CONNECTORIZED SWBD CABLE ASSEMBLY REQUIRED FOR EACH MOD2 LINE UNIT J5D004AC-2,L12(TN1058 OR TN1058B) OR L15(TN1048) OR J5D004AE-1,L68 (TN1058) OR L71 (TN1048) INSTALLED IN A SM ARRANGED FOR A CONCENTRATION RATIO OF 4:1 AND CONNECTED TO A DF E/W 711 CONN 89G1B-128 OR 112G1B-128 (SEE FIG. A) SEE NOTE 88 & 90. SEE TBL A1 FOR DF BLKS.			180								
CONNECTORIZED SWBD CABLE ASSEMBLY REQUIRED FOR EACH MOD2 LINE UNIT J5D004AC-2,L12(TN1058 OR TN1058B) OR L15 (TN1048) OR J5D004AE-1,L68 (TN1058) OR L71 (TN1048) INSTALLED IN A SM ARRANGED FOR A CONCENTRATION RATIO OF 4:1 AND CONNECTED TO A DF (SWC) 89E1B-128 OR 112E1B-128. (SEE FIG. A1 AND NOTE 90). SEE TBL A1 FOR DF BLKS.			180A								
CONNECTORIZED SWBD CABLE ASSEMBLY REQUIRED FOR EACH MOD2 LINE UNIT J5D004AC-2,L15(TN1048) OR J5D004AE-1,L71(TN1048) INSTALLED IN A SM ARRANGED FOR A CONCENTRATION RATIO OF 4:1 AND CONNECTED TO A GAS TUBE PROTECTION AT LNI. (ALSO REQUIRED G156C OR G156D) (SEE FIG.A OR A1 AND NOTE 90).			180B								
CONNECTORIZED SWBD CABLE ASSEMBLIES REQUIRED FOR EACH MOD2 LINE UNIT J5D004AC-2,L12 (TN1058 OR TN1058B) OR L15 (TN1048) INSTALLED IN A SM() LTP(), ARRANGED FOR A CONC R OF 4:1 AND CONNECTED TO A DF E/W TELZON BLKS. (SEE FIG. A2 AND NOTE 90). 89E1B-128 OR 112E1B-128. SEE TBL A1 FOR DF BLKS.			180D								
CONNECTORIZED SWBD CABLE ASSEMBLY REQUIRED FOR EACH MOD2 LINE UNIT J5D004AC-2,L12 (TN1058 OR TN1058B) OR L15 (TN1048) INSTALLED IN A SM() LTP(), ARRANGED FOR A CONC R OF 4:1 AND CONNECTED TO A DF E/W 89G1B-128A OR 89G1B-128B (TRW CONN T=1,R=33 AT&T PATTERN). (SEE FIG. A2 AND NOTE 90). SEE TBL A1 FOR DF BLKS.			180E								
CONNECTORIZED SWBD CABLE ASSEMBLY REQUIRED FOR EACH MOD2 LINE UNIT J5D004AC-2,L13(TN1058 OR TN1058B) OR L16(TN1048) OR J5D004AE-1,L69 (TN1058) OR L72 (TN1048) INSTALLED IN A SM ARRANGED FOR A CONCENTRATION RATIO OF 6:1 AND CONNECTED TO A A DF E/W 711 CONN. 89G1B-128 OR 112G1B-128. (SEE FIG. A). SEE NOTE 88 AND 90. SEE TBL A1 FOR DF BLKS.			181								
CONNECTORIZED SWBD CABLE ASSEMBLY REQUIRED FOR EACH MOD2 LINE UNIT J5D004AC-2,L13 (TN1058 OR TN1058B) OR L16(TN1048) OR J5D004AE-1,L69(TN1058) OR L72 (TN1048) INSTALLED IN A SM ARRANGED FOR A CONCENTRATION RATIO OF 6:1 AND CONNECTED TO A DF(SWC) 89E1B-128 OR 112E1B-128 (SEE FIG.A1 AND NOTE 90). SEE TBL A1 FOR DF BLKS.			181A								

TABLE-A CONTINUED

TABLE A-FEATURES(CONTINUED)

EQUIPMENT DESCRIPTION	REF NOTE	RAT-ING	LIST OR GROUP	EQUIPMENT OR CIRCUIT DATA QTY	EQUIPMENT OR CIRCUIT	L/G OR FIG	WRG	APP	SD EQUIVALENT SCHEMATIC	FIG	OPT
CONNECTORIZED SWBD CABLE ASSEMBLY REQUIRED FOR EACH MOD2 LINE UNIT J5D004AC-2,L16(TN1048) OR J5D004AE-1,L72 (TN1048) INSTALLED IN A SM ARRANGED FOR A CONCENTRATION RATIO DF 6:1 AND CONNECTED TO A GAS TUBE PROTECTION AT LNI;(ALSO REQUIRED G157C OR G157D) (SEE FIG.A OR A1 AND NOTE 90).			181B								
CONNECTORIZED SWBD CABLE ASSEMBLY REQUIRED FOR EACH MOD2 LINE UNIT J5D004AC-2,L13 (TN1058 OR TN1058B) OR L16 (TN1048) INSTALLED IN A SM() LTP(), ARRANGED FOR A CONC R OF 6:1 AND CONNECTED TO A DF E/W TELZON BLKS. (SEE FIG. A2 AND NOTE 90). SEE TBL A1 FOR DF BLKS.			181D								
CONNECTORIZED SWBD CABLE ASSEMBLY REQUIRED FOR EACH MOD2 LINE UNIT J5D004AC-2,L13 (TN1058 OR TN1058B) OR L16 (TN1048) INSTALLED IN A SM() LTP(), ARRANGED FOR A CONC R OF 6:1 AND CONNECTED TO A DF E/W 89G1B-128A OR 89G1B-128B (TRW CONN T=1,R=33 AT&T PATTERN). (SEE FIG. A2 AND NOTE 90). SEE TBL A1 FOR DF BLKS.			181E								
CONNECTORIZED SWBD CABLE ASSEMBLY REQUIRED FOR EACH MOD2 LINE UNIT J5D004AC-2,L14(TN1058) OR L17 (TN1048) OR J5D004AE-1, L70 (TN1058 OR TN1058B) OR L73 (TN1048) INSTALLED IN A SM ARRANGED FOR A CONCENTRATION RATIO OF 8:1 AND CONNECTED TO A DF E/W 711 CONN 89G1B-128 OR 112G1B-12B. SEE FIG. A). SEE NOTE 88 AND 90. SEE TBL A1 FOR DF BLKS.			182								
CONNECTORIZED SWBD CABLE ASSEMBLY REQUIRED FOR EACH MOD2 LINE UNIT J5D004AC-2,L14(TN1058 OR TN1058B) OR L17(TN1048) OR J5D004AE-1,L70 (TN1058) OR L73 (TN1048) INSTALLED IN A SM ARRANGED FOR A CONCENTRATION RATIO OF 8:1 AND CONNECTED TO A DF(SWC) 89E1B-128 OR 112E1B-128. (SEE FIG.A1 AND NOTE 90). SEE TBL A1 FOR DF BLKS.			182A								
CONNECTORIZED SWBD CABLE ASSEMBLY REQUIRED FOR EACH MOD2 LINE UNIT J5D004AC-2,L17(TN1048) OR J5D004AE-1,L73 (TN1048) INSTALLED IN A SM ARRANGED FOR A CONCENTRATION RATIO OF 8:1 AND CONNECTED TO A GAS TUBE PROTECTION AT LNI. (ALSO REQUIRED G158C OR G158D) (SEE FIG.A OR A1 AND NOTE 90).			182B								

TABLE-A CONTINUED

COPYRIGHT @ 2001 LUCENT TECHNOLOGIES
ALL RIGHTS RESERVED

BT13

INTERCABINET CABLING
FOR
5ESS * SWITCH
*LUCENT TRADEMARK

DWG SIZE C2 | ISSUE 117

LUCENT TECHNOLOGIES INC | ED5D500-21 | SHEET A28 OF 292

PRINTED IN U.S.A.

TABLE A-FEATURES(CONTINUED)

EQUIPMENT				EQUIPMENT OR CIRCUIT DATA						SD EQUIVALENT		
DESCRIPTION	REF NOTE	RAT-ING	LIST OR GROUP	QTY	EQUIPMENT OR CIRCUIT	L/G OR FIG	WRG	APP	SCHEMATIC	FIG	OPT
CONNECTORIZED SWBD CABLE ASSEMBLY REQUIRED FOR EACH MOD2 LINE UNIT J5D004AC-2,L14 (TN1058 OR TN1058B) OR L17 (TN1048) INSTALLED IN A SM() LTP(), ARRANGED FOR A CONC R OF 8:1 AND CONNECTED TO A DF E/W TELZON BLKS. (SEE FIG. A2 AND NOTE 90). SEE TBL A1 FOR DF BLKS.			182D								
CONNECTORIZED SWBD CABLE ASSEMBLY REQUIRED FOR EACH MOD2 LINE UNIT J5D004AC-2,L14 (TN1058 OR TN1058B) OR L17 (TN1048) INSTALLED IN A SM() LTP(), ARRANGED FOR A CONC R OF 8:1 AND CONNECTED TO A DF E/W 89G1B-128A OR 89G1B-128B (TRW CONN T=1,R=33 AT&T PATTERN). (SEE FIG. A2 AND NOTE 90). SEE TBL A1 FOR DF BLKS.			182E								
CONNECTORIZED SWBD CABLE ASSEMBLY REQUIRED FOR EACH MOD3 LINE UNIT (J5D004AD) E/W TN1058, TN1058B OR TN1048 CP INSTALLED IN A SM ARRANGED FOR A A CONCENTRATION RATIO OF 4:1 AND CONNECTED TO A DF E/W 711 CONN. (SEE FIG. A3 NOTE 88 AND NOTE 90). 89G1B-128 OR 112G1B-128 SEE TBL A1 FOR DF BLKS.			183								
CONNECTORIZED SWBD CABLE ASSEMBLY REQUIRED FOR EACH MOD3 LINE UNIT (J5D004AD) E/W TN1058, TN1058B OR TN1048 CP INSTALLED IN A SM ARRANGED FOR A CONCENTRATION RATIO OF 4:1 AND CONNECTED TO A DF (SWC). 89E1B-128 OR 112E1B-128 (SEE FIG. A3 AND NOTE 90). SEE TBL A1 FOR DF BLKS.			183A								
CONNECTORIZED SWBD CABLE ASSEMBLY REQUIRED FOR EACH MOD3 LINE UNIT (J5D004AD) E/W TN1048 CP INSTALLED IN A SM ( ) ARRANGED FOR A CONCENTRATION RATIO OF 4:1 AND CONNECTED TO A GAS TUBE PROTECTION AT LNI. (ALSO REQUIRED G156C OR G156D). (SEE FIG. A4 AND NOTE 90).			183B								
CONNECTORIZED SWBD CABLE ASSEMBLY REQUIRED FOR EACH MOD3 LINE UNIT (J5D004AD) E/W TN1058, TN1058B OR TN1048 CP INSTALLED IN A SM ARRANGED FOR A CONCENTRATION RATIO OF 4:1 AND CONNECTED TO A DF E/W TELZON BLKS. (SEE FIG. A3 AND NOTE 90). SEE TBL A1 FOR DF BLKS.			183D								
CONNECTORIZED SWBD CABLE ASSEMBLY REQUIRED FOR EACH MOD3 LINE UNIT (J5D004AD) E/W TN1058, TN1058B OR TN1048 CP INSTALLED IN A SM ARRANGED FOR A CONCENTRATION RATIO OF 4:1 AND CONNECTED TO A DF E/W TRW CONN T=1,R=33 AT&T PATTERN. (SEE FIG. A3 AND NOTE 90). 89G1B-128B. SEE TBL A1 FOR DF BLKS.			183E								
CONNECTORIZED SWBD CABLE ASSEMBLY REQUIRED FOR EACH MOD3 LINE UNIT (J5D004AD) E/W TN1058, TN1058B OR TN1048 CP INSTALLED IN A SM ARRANGED FOR A CONCENTRATION RATIO OF 6:1 AND CONNECTED TO A DF E/W 711 CONN. (SEE FIG. A3 AND NOTE 88 AND 90). 89G1B-128 OR 112G1B-128. SEE TBL A1 FOR DF BLKS.			184								

TABLE-A CONTINUED

TABLE A-FEATURES(CONTINUED)

EQUIPMENT				EQUIPMENT OR CIRCUIT DATA						SD EQUIVALENT		
DESCRIPTION	REF NOTE	RAT-ING	LIST OR GROUP	QTY	EQUIPMENT OR CIRCUIT	L/G OR FIG	WRG	APP	SCHEMATIC	FIG	OPT
CONNECTORIZED SWBD CABLE ASSEMBLY REQUIRED FOR EACH MOD3 LINE UNIT (J5D004AD) E/W TN1058, TN1058B OR TN1048 CP INSTALLED IN A SM ARRANGED FOR A CONCENTRATION RATIO OF 6:1 AND CONNECTED TO A DF (SWC) 89E1B-128 OR 112E1B-128. (SEE FIG. A3 AND NOTE 90). SEE TBL A1 FOR DF BLKS.			184A								
CONNECTORIZED SWBD CABLE ASSEMBLY REQUIRED FOR EACH MOD3 LINE UNIT (J5D004AD) E/W TN1048 CP INSTALLED IN A SM ( ) ARRANGED FOR A CONCENTRATION RATIO OF 6:1 AND CONNECTED TO A GAS TUBE PROTECTION AT LNI. (ALSO REQUIRED G157C OR G157D). (SEE FIG. A4 AND NOTE 90).			184B								
CONNECTORIZED SWBD CABLE ASSEMBLY REQUIRED FOR EACH MOD3 LINE UNIT (J5D004AD) E/W TN1058, TN1058B OR TN1048 CP INSTALLED IN A SM ARRANGED FOR A CONCENTRATION RATIO OF 6:1 AND CONNECTED TO A DF E/W TELZON BLKS. (SEE FIG. A3 AND NOTE 90). SEE TBL A1 FOR DF BLKS.			184D								
CONNECTORIZED SWBD CABLE ASSEMBLY REQUIRED FOR EACH MOD3 LINE UNIT (J5D004AD) E/W TN1058, TN1058B OR TN1048 CP INSTALLED IN A SM ARRANGED FOR A CONCENTRATION RATIO OF 6:1 AND CONNECTED TO A DF E/W TRW CONN T=1,R=33 AT&T PATTERN. (SEE FIG. A3 AND NOTE 90). 89G1B-128B. SEE TBL A1 FOR DF BLKS.			184E								
CONNECTORIZED SWBD CABLE ASSEMBLY REQUIRED FOR EACH MOD3 LINE UNIT (J5D004AD) E/W TN1058, TN1058B OR TN1048 CP INSTALLED IN A SM ARRANGED FOR A CONCENTRATION RATIO OF 8:1 AND CONNECTED TO A DF E/W 711 CONN. (SEE FIG. A3 AND NOTE 88 AND 90). 89G1B-128 OR 112G1B-128. SEE TBL A1 FOR DF BLKS.			185								
CONNECTORIZED SWBD CABLE ASSEMBLY REQUIRED FOR EACH MOD3 LINE UNIT (J5D004AD) E/W TN1058, TN1058B OR TN1048 CP INSTALLED IN A SM ARRANGED FOR A CONCENTRATION RATIO OF 8:1 AND CONNECTED TO A DF (SWC) 89E1B-128 OR 112E1B-128. (SEE FIG. A3 AND NOTE 90). SEE TBL A1 FOR DF BLKS.			185A								

TABLE-A CONTINUED

COPYRIGHT @ 2001 LUCENT TECHNOLOGIES
ALL RIGHTS RESERVED

BT13

INTERCABINET CABLING
FOR
5ESS * SWITCH
*LUCENT TRADEMARK

DWG SIZE C2 | ISSUE 117

PRINTED IN U.S.A.

TABLE A-FEATURES(CONTINUED)

EQUIPMENT DESCRIPTION	REF NOTE	RAT-ING	LIST OR GROUP	EQUIPMENT OR CIRCUIT DATA QTY	EQUIPMENT OR CIRCUIT	L/G OR FIG	WRG	APP	SD EQUIVALENT SCHEMATIC	FIG	OPT
CONNECTORIZED SWBD CABLE ASSEMBLY REQUIRED FOR EACH MOD3 LINE UNIT (J5D004AD) E/W TN1048 CP INSTALLED IN A SM ( ) ARRANGED FOR A CONCENTRATION RATIO OF 8:1 AND CONNECTED TO A GAS TUBE PROTECTION AT LNI. (ALSO REQUIRED G158C OR 158D). (SEE FIG. A4. AND NOTE 90).			185B								
CONNECTORIZED SWBD CABLE ASSEMBLY REQUIRED FOR EACH MOD3 LINE UNIT (J5D004AD) E/W TN1058, TN1058B OR TN1048 CP INSTALLED IN A SM ARRANGED FOR A CONCENTRATION RATIO OF 8:1 AND CONNECTED TO A DF E/W TELZON BLKS. (SEE FIG. A3 AND NOTE 90). SEE TBL A1 FOR DF BLKS.			185D								
CONNECTORIZED SWBD CABLE ASSEMBLY REQUIRED FOR EACH MOD3 LINE UNIT (J5D004AD) E/W TN1058, TN1058B OR TN1048 CP INSTALLED IN A SM ARRANGED FOR A CONCENTRATION RATIO OF 8:1 AND CONNECTED TO A DF E/W TRW CONN T=1,R-33 AT&T PATTERN. (SEE FIG. A3 AND NOTE 90). 89G1B-128B. SEE TBL A1 FOR DF BLKS.			185E								
CONNECTORIZED SWBD CABLE ASSEMBLY REQUIRED FOR EACH MOD3 LINE UNIT (J5D004AD) E/W TN1058, TN1058B OR TN1048 CP INSTALLED IN A SM ARRANGED FOR A CONCENTRATION RATIO OF 10:1 AND CONNECTED TO A DF E/W 711 CONN. (SEE FIG. A3 AND NOTE 88 AND 90). 89G1B-128 OR 112G1B-128. SEE TBL A1 FOR DF BLKS.			186								
CONNECTORIZED SWBD CABLE ASSEMBLY REQUIRED FOR EACH MOD3 LINE UNIT (J5D004AD) E/W TN1058, TN1058B OR TN1048 CP INSTALLED IN A SM ARRANGED FOR A CONCENTRATION RATIO OF 10:1 AND CONNECTED TO A DF (SWC) 89E1B-128 OR 112E1B-128. (SEE FIG. A3 AND NOTE 90). SEE TBL A1 FOR DF BLKS.			186A								
CONNECTORIZED SWBD CABLE ASSEMBLY REQUIRED FOR EACH MOD3 LINE UNIT (J5D004AD) E/W TN1048 CP INSTALLED IN A SM ( ) ARRANGED FOR A CONCENTRATION RATIO OF 10:1 AND CONNECTED TO A GAS TUBE PROTECTION AT LNI. (ALSO REQUIRED G159C OR 159D). (SEE FIG. A4 AND NOTE 90).			186B								
CONNECTORIZED SWBD CABLE ASSEMBLY REQUIRED FOR EACH MOD3 LINE UNIT (J5D004AD) E/W TN1058, TN1058B OR TN1048 CP INSTALLED IN A SM ARRANGED FOR A CONCENTRATION RATIO OF 10:1 AND CONNECTED TO A DF E/W TELZON BLKS. (SEE FIG. A3 AND NOTE 90). SEE TBL A1 FOR DF BLKS.			186D								
CONNECTORIZED SWBD CABLE ASSEMBLY REQUIRED FOR EACH MOD3 LINE UNIT (J5D004AD) E/W TN1058, TN1058B OR TN1048 CP INSTALLED IN A SM ARRANGED FOR A CONCENTRATION RATIO OF 10:1 AND CONNECTED TO A DF E/W TRW CONN T=1,R=33 AT&T PATTERN. (SEE FIG. A3 AND NOTE 90). 89G1B-128B. SEE TBL A1 FOR DF BLKS.			186E								

TABLE-A CONTINUED

TABLE A-FEATURES(CONTINUED)

EQUIPMENT DESCRIPTION	REF NOTE	RAT-ING	LIST OR GROUP	EQUIPMENT OR CIRCUIT DATA QTY	EQUIPMENT OR CIRCUIT	L/G OR FIG	WRG	APP	SD EQUIVALENT SCHEMATIC	FIG	OPT
CONNECTORIZED SWBD CABLE ASSEMBLY REQUIRED FOR A REMOTE OFFICES (MMRSM,ORM,TRM,RISLU OR VCDX) WHEN ALARM STATUS PANEL ED5D678-10 IS SPECIFIED. (SCSD ALARM CABLE). SEE FIG. N3 OR N4.			189								
CONNECTORIZED SWBD CABLE ASSEMBLY REQUIRED FOR A REMOTE OFFICE (MMRSM, ORM OR TRM) WHEN EQUIPPED WITH ASU ED5D586-10 L1 OR L3. (SC & SD ALARM CABLE). (REQD WITH GENERIC 5E5 OR LATER FOR ORM OR TRM). (SEE FIG. N1 OR N2).			190								
CONNECTORIZED SWBD CABLE ASSEMBLY REQUIRED IN ADDITION TO G189 FOR A FIRST RSM IN MMRSM OR FIRST ORM OR TRM OF A CO-LOCATED SITE, E/W AU2 (J5D003AU-2) F/F, TO PROVIDE ABS/RTN WHEN AUDIBLE ALARM PANEL IS NOT SPECIFIED. (ABS,RTN CABLE FROM PWR PLANT). (REQD WITH GENERIC 5E5 OR LATER FOR ORM OR TRM). (SEE FIG. N1 & N3).			191								
CONNECTORIZED CABLE ASSEMBLY REQUIRED IN ADDITION TO G189 FOR THE FIRST RSM IN A MMRSM OR FIRST ORM,TRM,RISLU IN A CO-LOCATED SITE E/W MFFU (J5D003FJ) TO PROVIDE ABS/RTN WHEN AUDIBLE ALARM PANEL IS NOT SPECIFIED. (ABS/RTN CABLE FROM PWR PLANT) (SEE FIG N2 & N3)			191A								
CONNECTORIZED SWBD CABLE ASSEMBLY REQUIRED IN ADDITION TO G189 FOR A FIRST RSM IN MMRSM OR FIRST ORM OR TRM OF A CO-LOCATED SITE, E/W AU2 (J5D003AU-2) F/F, TO PROVIDE ABS/RTN WHEN AUDIBLE ALARM PANEL ED5D141-10 G4 IS SPECIFIED. (ABS,RTN CABLE). (REQD WITH GENERIC 5E5 OR LATER FOR ORM OR TRM). (SEE FIG. N2).			192								
CONNECTORIZED SWBD CABLE ASSEMBLY REQUIRED IN ADDITION TO G192 FOR ABS & RTN FROM AUD ALM PNL TO PWR PLANT (ABS,ABS RTN) (SEE FIG.N2).			192A								
CONNECTORIZED CABLE ASSEMBLY REQUIRED IN ADDITION TO G189 FOR THE FIRST RSM IN A MMRSM OR FIRST ORM OR TRM IN A CO-LOCATED SITE E/W MFFU (J5D003FJ) TO PROVIDE ABS/RTN WHEN AUDIBLE ALARM PANEL ED5D141-10,G4 IS SPECIFIED. (ABS/RTN CABLE FROM PWR PLANT) (SEE FIG N2 & N3)			192B								

TABLE-A CONTINUED

COPYRIGHT @ 2001 LUCENT TECHNOLOGIES
ALL RIGHTS RESERVED

BT13

INTERCABINET CABLING
FOR
5ESS * SWITCH
*LUCENT TRADEMARK

DWG SIZE C2 | ISSUE 117

LUCENT TECHNOLOGIES INC | ED5D500-21 | SHEET A30 OF 292

PRINTED IN U.S.A.

TABLE A-FEATURES(CONTINUED)

EQUIPMENT				EQUIPMENT OR CIRCUIT DATA					SD EQUIVALENT		
DESCRIPTION	REF NOTE	RAT-ING	LIST OR GROUP	QTY	EQUIPMENT OR CIRCUIT	L/G OR FIG	WRG	APP	SCHEMATIC	FIG	OPT
CONNECTORIZED SWBD CABLE ASSEMBLY REQUIRED FOR MMRSM WHEN 2ND,3RD OR 4TH RSM OR A CO-LOCATED ORM/TRM SITE WHEN 2ND THRU 12TH SM IS SPECIFIED AND E/W AU2 (J5D003AU-2) F/F. (ABS AND RTN MULT BETWEEN THE MODULES). (SEE FIG. N1 OR N2).			193								
CONNECTORIZED CABLE ASSEMBLY REQUIRED FOR A MMRSM WHEN 2ND, 3RD OR 4TH RSM OR A CO-LOCATED ORM/TRM SITE WHEN 2ND THRU 12TH SM IS SPECIFIED. (ABS/RTN MULT BETWEEN THE MODULES). CONNECTING CABINETS E/W MFFU (J5D003FJ) ONLY. (SEE FIG N2 & N3)			193A								
CONNECTORIZED CABLE ASSEMBLY REQUIRED FOR A MMRSM WHEN 2ND, 3RD OR 4TH RSM OR A CO-LOCATED ORM/TRM SITE WHEN 2ND THRU 12TH SM IS SPECIFIED. (ABS/RTN MULT BETWEEN THE MODULES). CONNECTING CABINETS E/W AU2 (J5D003AU-2) IN ONE CAB AND MFFU (J5D003FJ) IN OTHER CAB. (SEE FIG N2 & N3)			193B								
CONNECTORIZED SWBD CABLE ASSEMBLIES REQUIRED IN ADDITION TO G192 FOR AN AUDIBLE ALARM PANEL (ED-5D141-10,G4) (FUSE FOR AUD ALM PNL RINGER) FOR AU-2 (J5D003AU-2) F/F. (SEE FIG.N2).			194								
CONNECTORIZED SWBD CABLE ASSEMBLY REQUIRED IN ADDITION TO G194 FOR ALARM LEADS FROM AUD ALM PNL (ED-5D141-10,G4) OR AUD/VIS ALM UNIT (NE00312-31,G1) TO ALM STAT PNL VIA DF (AUD,MJ,CR & MN ALARMS) (SEE FIG.N2).			194A								
CONNECTORIZED SWBD CABLE ASSEMBLIES REQUIRED IN ADDITION TO G192B FOR AN AUDIBLE ALARM PANEL(ED-5D141-10,G4) OR AUD/VIS ALM UNIT (NE00312-31,G1) (FUSE FOR AUD ALM PNL RINGER) FOR MFFU (J5D003FJ-1) F/F. (SEE FIG.N2).			194B								
CONNECTORIZED SWBD CABLE ASSEMBLY REQUIRED FOR REMOTE AUDIBLE ALARM PANEL (ED-5D141-10,G4) OR AUD/VIS ALM UNIT (NE00312-31,G1) CONNECTED TO A EXIT PILOT LAMP. (SEE FIG. N2).			195								
CONNECTORIZED SWBD CABLE ASSEMBLY REQUIRED IN ADDITON TO G194 WHEN OTHER ALARM REPORTING EQUIPMENT REQUIRES -48V (-48VL,RTNL FUSE) FOR AU-2 (J5D003AU-2) F/F. (SEE FIG.N2).			196								
CONNECTORIZED SWBD CABLE ASSEMBLY REQUIRED IN ADDITON TO G194B WHEN OTHER ALARM REPORTING EQUIPMENT REQUIRES -48V (-48VL,RTNL FUSE) FOR MFFU (J5D003FJ-1) F/F. (SEE FIG.N2).			196A								
CONNECTORIZED SWBD CABLE ASSEMBLY REQUIRED FOR PCFD (J86334D) OR GPDF (J86344E) ONE ALARM CSAN POINT (SG0 & SG1) CROSSCONNECTED TO A MMSU VIA DF. REQUIRED FOR MMRSM ONLY. (SEE FIG. N1 OR N2).			198								

TABLE-A CONTINUED

TABLE A-FEATURES(CONTINUED)

EQUIPMENT				EQUIPMENT OR CIRCUIT DATA					SD EQUIVALENT		
DESCRIPTION	REF NOTE	RAT-ING	LIST OR GROUP	QTY	EQUIPMENT OR CIRCUIT	L/G OR FIG	WRG	APP	SCHEMATIC	FIG	OPT
CONNECTORIZED SWBD CABLE ASSEMBLY REQUIRED TO PROVIDE FOR MJ AND MN ALMS FOR PCFD(J86334D) OR GPDF (J86344E) TO C/O OR MMRSM,ORM,TRM.			198A								
CONNECTORIZED SWBD CABLE ASSEMBLY REQUIRED FOR M CAB F/F ALARM TWO SCAN POINTS (SG0 & SG1) CROSSCONNECTED TO A MMSU VIA DF. REQUIRED FOR MMRSM/ORM/ TRM E/W AU-2 (J5D003AU-2). (SEE FIG. N1 OR N2).			200								
CONNECTORIZED SWBD CABLE ASSEMBLY REQUIRED FOR M CAB F/F ALARM TWO SCAN POINTS (SG0 & SG1) CROSSCONNECTED TO A MMSU VIA DF. REQUIRED FOR MMRSM/ORM/ TRM E/W MFFU (J5D003FJ-1). (SEE FIG. N1 OR N2).			200A								
CONNECTORIZED SWBD CABLE ASSEMBLY REQUIRED FOR EACH MOD2 LINE UNIT J5D004AC-2 (TN1058, TN1058B OR TN1048) OR J5D004AE-1 (TN1058 OR TN1048) INSTALLED IN A SM ARRANGED FOR A CONCENTRATION RATIO OF 4:1 AND CONNECTED TO A DF E/W 711 CONN (89M1AA11-128 DF BLK ONLY). (SEE FIG. A5). SEE NOTE 88 & 90. SEE TBL A1 FOR DF BLKS. DA EFF:11/30/96 FE/RA:NONE		DA	201								
CONNECTORIZED SWBD CABLE ASSEMBLIES REQURIED FOR EACH MOD2 LINE UNIT J5D004AC-2 (TN1058,TN1058B OR TN1048) INSTALLED IN A SM() LTP(). ARRANGED FOR A CONC R OF 4:1 AND CONNECTED TO A DF E/W 89M1CA21-128 OR 112J1B-128 DF BLK (TRW CONN).(SEE FIG. A5 AND NOTE 90). SEE TBL A1 FOR DF BLKS. DA EFF:11/30/96 FE/RA:NONE		DA	201B								
CONNECTORIZED SWBD CABLE ASSEMBLY REQUIRED FOR EACH MOD2 LINE UNIT J5D004AC-2 (TN1058, TN1058B OR TN1048) OR J5D004AE-1 (TN1058 OR TN1048) INSTALLED IN A SM ARRANGED FOR A CONCENTRATION RATIO 6:1 AND CONNECTED TO A DF E/W 711 CONN (89M1AA11-128 DF BLK ONLY). (SEE FIG. A5) SEE NOTE 88 AND 90. SEE TBL A1 FOR DF BLKS. DA EFF:11/30/96 FE/RA:NONE		DA	202								

TABLE-A CONTINUED

COPYRIGHT @ 2001 LUCENT TECHNOLOGIES
ALL RIGHTS RESERVED

BT13

INTERCABINET CABLING
FOR
5ESS * SWITCH
*LUCENT TRADEMARK

DWG SIZE C2 | ISSUE 117

LUCENT TECHNOLOGIES INC | ED5D500-21 | SHEET A31 OF 292

PRINTED IN U.S.A.

TABLE A-FEATURES(CONTINUED)

EQUIPMENT DESCRIPTION	REF NOTE	RATING	LIST OR GROUP	EQUIPMENT OR CIRCUIT DATA QTY	EQUIPMENT OR CIRCUIT	L/G OR FIG	WRG	APP	SD EQUIVALENT SCHEMATIC	FIG	OPT
CONNECTORIZED SWBD CABLE ASSEMBLY REQUIRED FOR EACH MOD2 LINE UNIT J5D004AC-2 (TN1058, TN1058B OR TN1048) INSTALLED IN A SM() LTP(). ARRANGED FOR A CONC R OF 6:1 AND CONNECTED TO A DF E/W 89M1CA21-128 OR 112J1B-128 DF BLK (TRW CONN). (SEE FIG. A5 AND NOTE 90). SEE TBL A1 FOR DF BLKS. DA EFF:11/30/96 FE/RA:NONE		DA	202B								
CONNECTORIAED SWBD CABLE ASSEMBLY REQUIRED FOR EACH MOD2 LINE UNIT J5D004AC-2 (TN1058, TN1058B,TN1048) OR J5D004EA-1 (TN1058 OR TN1048) INSTALLED IN A SM ARRANGED FOR A CONCEN-TRATION RATIO OF 8:1 AND CONNECTED TO A DF E/W 711 CONN. (89M1AA11-128 DF BLK ONLY). (SEE FIG. A5). SEE NOTE 88 & 90. SEE TBL A1 FOR DF BLKS. DA EFF:11/30/96 FE/RA:NONE		DA	203								
CONNECTORIZED SWBD CABLE ASSEMBLY REQUIRED FOR EACH MOD2 LINE UNIT J5D004AC-2 (TN1058, TN1058B OR TN1048) INSTALLED IN A SM() LTP(). ARRANGED FOR A CONC R OF 8:1 AND CONNECTED TO A DF E/W 89M1CA21-128 OR 112J1B-128 DF BLK (TRW CONN). (SEE FIG. A5 AND NOTE 90). SEE TBL A1 FOR DF BLKS. DA EFF:11/30/96 FE/RA:NONE		DA	203B								
CONNECTORIZED SWBD CABLE ASSEMBLY REQUIRED FOR EACH MOD3 LINE UNIT (J5D004AD) E/W TN1058, TN1058B OR TN1048 CP INSTALLED IN A SM ARRANGED FOR A CONCEN-TRATION RATIO OF 4:1 AND CONNECTED TO A DF E/W 711 CONN. (SEE FIG. A6 NOTE 88 AND NOTE 90). 89M1AA11-128 DF BLK ONLY. SEE TBL A1 FOR DF BLKS.			204								
CONNECTORIZED SWBD CABLE ASSEMBLY REQURIED FOR EACH MOD3 LINE UNIT (J5D004AD) E/W TN1058. TN1058B OR TN1048 CP INSTALLED IN A SM ARRANGED FOR A CONCEN-TRATION RATIO OF 4:1 AND CONNECTED TO A DF E/W 89M1CA21-128 OR 112J1B-128 DF BLK (TRW CONN). (SEE FIG. A6 AND NOTE 90). SEE TBL A1 FOR DF BLKS.			204B								
CONNECTORIZED SWBD CABLE ASEMBLY REQUIRED FOR EACH MOD3 LINE UNIT (J5D004AD) E/W TN1058, TN1058B OR TN1048 CP INSTALLED IN A SM ARRANGED FOR A CONCEN-TRATION RATIO OF 6:1 AND CONNECTED TO A DF E/W 711 CONN. (SEE FIG. A6 AND NOTE 88 AND 90). 89M1AA11-128 DF BLK ONLY. SEE TBL A1 FOR DF BLKS.			205								
CONNECTORIZED SWBD CABLE ASSEMBLY REQUIRED FOR EACH MOD3 LINE UNIT (J5D004AD) E/W TN1058, TN1058B OR TN1048 CP INSTALLED IN A SM ARRANGED FOR A CONCEN-TRATION RATIO OF 6:1 AND CONNECTED TO A DF E/W 89M1CA21-128 OR 112J1B-128 DF BLK (TRW CONN). (SEE FIG. A6 AND NOTE 90). SEE TBL A1 FOR DF BLKS.			205B								

TABLE-A CONTINUED

TABLE A-FEATURES(CONTINUED)

EQUIPMENT DESCRIPTION	REF NOTE	RATING	LIST OR GROUP	EQUIPMENT OR CIRCUIT DATA QTY	EQUIPMENT OR CIRCUIT	L/G OR FIG	WRG	APP	SD EQUIVALENT SCHEMATIC	FIG	OPT
CONNECTORIZED SWBD CABLE ASSEMBLY REQUIRED FOR EACH MOD3 LINE UNIT (J5D004AD) E/W TN1058, TN1058B OR TN1048 CP INSTALLED IN A SM ARRANGED FOR A CONCEN-TRATION RATIO OF 8:1 AND CONNECTED TO A DF E/W 711 CONN. (SEE FIG. A6 AND NOTE 88 AND 90). 89M1AA11-128 DF BLK ONLY. SEE TBL A1 FOR DF BLKS.			206								
CONNECTORIZED SWBD CABLE ASSEMBLY REQUIRED FOR EACH MOD3 LINE UNIT (J5D004AD) E/W TN1058, TN1058B OR TN1048 CP INSTALLED IN A SM ARRANGED FOR A CONCEN-TRATION RATIO OF 8:1 AND CONNECTED TO A DF E/W 89M1CA21-128 OR 112J1B-128. (TRW CONN). (SEE FIG. A6 AND NOTE 90). SEE TBL A1 FOR DF BLKS.			206B								
CONNECTORIZED SWBD CABLE ASSEMBLY REQUIRED FOR EACH MOD3 LINE UNIT (J5D004AD) E/W TN1058, TN1058B OR TN1048 CP INSTALLED IN A SM ARRANGED FOR A CONCEN-TRATION RATIO OF 10:1 AND CONNECTED TO A DF E/W 711 CONN. (SEE FIG. A6 AND NOTE 88 AND 90). 89M1AA11-128 DF BLK ONLY. SEE TBL A1 FOR DF BLKS.			207								
CONNECTORIZED SWBD CABLE ASSEMBLY REQUIRED FOR EACH MOD3 LINE UNIT (J5D004AD) E/W TN1058, TN1058B OR TN1048 CP INSTALLED IN A SM ARRANGED FOR A CONCEN-TRATION RATIO OF 10:1 AND CONNECTED TO A DF E/W 89M1CA21-128 OR 112J1B-128 DF BLK (TRW CONN). (SEE FIG. A6 AND NOTE 90). SEE TBL A1 FOR DF BLKS.			207B								
CONNECTORIZED SWBD CABLE ASSEMBLY REQUIRED FOR MISC CAB F/F ALM ONE SCAN POINT(SGO) CROSS CONNECTED TO A MMRSM VI DF.REQUIRED FOR MMRSM/ORM/TRM E/W J5D003AU-2(SEE FIG.N1 OR N2)			210								
CONNECTORIZED SWBD CABLE ASSEMBLY REQUIRED FOR EACH LU2 (J5D004AC-2) E/W TN1048,TN1058 OR TN1058B INSTALLED IN SM() ARRANGED FOR A CONC RATIO OF 4:1 AND CONNECTED TO A DF (SWC). 64 PRS CABLE. SEE FIG. A7 AND NOTE 90. SEE TBL A1 FOR DF BLKS. DA EFF:11/30/96 FE/RA:NONE		DA	211A								

TABLE-A CONTINUED

COPYRIGHT @ 2001 LUCENT TECHNOLOGIES
ALL RIGHTS RESERVED

TABLE A-FEATURES(CONTINUED)

EQUIPMENT DESCRIPTION	REF NOTE	RAT-ING	LIST OR GROUP	EQUIPMENT OR CIRCUIT DATA QTY	EQUIPMENT OR CIRCUIT	L/G OR FIG	WRG	APP	SD EQUIVALENT SCHEMATIC	FIG	OPT
CONNECTORIZED SWBD CABLE ASSEMBLY REQUIRED FOR EACH LU2 (J5D004AC-2) E/W TN1048,TN1058 OR TN1058B INSTALLED IN SM() ARRANGED FOR A CONC RATIO OF 4:1 AND CONNECTED TO A DF E/W 89M1CA21-128 OR 112J1B-128 BLKS-TRW CONN. SEE FIG. A7 AND NOTE 90. 64 PRS CABLE. SEE TBL A1 FOR DF BLKS. DA EFF:11/30/96 FE/RA:NONE		DA	211B								
CONNECTORIZED SWBD CABLE ASSEMBLY REQUIRED FOR EACH LU2 (J5D004AC-2) E/W TN1048,TN1058 OR TN1058B INSTALLED IN SM() ARRANGED FOR A CONC RATIO OF 6:1 AND CONNECTED TO A DF (SWC). 64 PRS CABLE. SEE FIG. A7 AND NOTE 90. SEE TBL A1 FOR DF BLKS. DA EFF:11/30/96 FE/RA:NONE		DA	212A								
CONNECTORIZED SWBD CABLE ASSEMBLY REQUIRED FOR EACH LU2 (J5D004AC-2) E/W TN1048,TN1058 OR TN1058B INSTALLED IN SM() ARRANGED FOR A CONC RATIO OF 6:1 AND CONNECTED TO A DF E/W 89M1CA21-128 OR 112J1B-128 BLKS-TRW CONN. SEE FIG. A7 AND NOTE 90. 64 PRS CABLE. SEE TBL A1 FOR DF BLKS. DA EFF:11/30/96 FE/RA:NONE		DA	212B								
CONNECTORIZED SWBD CABLE ASSEMBLY REQUIRED FOR EACH LU2 (J5D004AC-2) E/W TN1048,TN1058 OR TN1058B INSTALLED IN SM() ARRANGED FOR A CONC RATIO OF 8:1 AND CONNECTED TO A DF (SWC). 64 PRS CABLE. SEE FIG. A7 AND NOTE 90. SEE TBL A1 FOR DF BLKS. DA EFF:11/30/96 FE/RA:NONE		DA	213A								
CONNECTORIZED SWBD CABLE ASSEMBLY REQUIRED FOR EACH LU2 (J5D004AC-2) E/W TN1048,TN1058 OR TN1058B INSTALLED IN SM() ARRANGED FOR A CONC RATIO OF 8:1 AND CONNECTED TO A DF E/W 89M1CA21-128 OR 112J1B-128 BLKS-TRW CONN. SEE FIG. A7 AND NOTE 90. 64 PRS CABLE. SEE TBL A1 FOR DF BLKS. DA EFF:11/30/96 FE/RA:NONE		DA	213B								
CONNECTORIZED SWBD CABLE ASSEMBLY REQUIRED FOR EACH LU3 (J5D004AD) E/W TN1048,TN1058 OR TN1058B CP INSTALLED IN A SM() ARRANGED FOR A CONC RATIO OF 4:1 AND CONNECTED TO A DF (SWC). 64 PRS CABLE. SEE FIG. A8 AND NOTE 90. SEE TBL A1 FOR DF BLKS.			214A								
CONNECTORIZED SWBD CABLE ASSEMBLY REQUIRED FOR EACH LU3 (J5D004AD) E/W TN1048,TN1058 OR TN1058B CP INSTALLED IN A SM() ARRANGED FOR A CONC RATIO OF 4:1 AND CONNECTED TO A DF E/W 89M1CA21-128 OR 112J1B-128 TRW BLKS. 64 PRS CABLE. SEE FIG. A8 AND NOTE 90. SEE TBL A1 FOR DF BLKS.			214B								

TABLE-A CONTINUED

TABLE A-FEATURES(CONTINUED)

EQUIPMENT DESCRIPTION	REF NOTE	RAT-ING	LIST OR GROUP	EQUIPMENT OR CIRCUIT DATA QTY	EQUIPMENT OR CIRCUIT	L/G OR FIG	WRG	APP	SD EQUIVALENT SCHEMATIC	FIG	OPT
CONNECTORIZED SWBD CABLE ASSEMBLY REQUIRED FOR EACH LU3 (J5D004AD) E/W TN1048,TN1058 OR TN1058B CP INSTALLED IN A SM() ARRANGED FOR A CONC RATIO OF 6:1 AND CONNECTED TO A DF (SWC). 64 PRS CABLE. SEE FIG. A8 AND NOTE 90. SEE TBL A1 FOR DF BLKS.			215A								
CONNECTORIZED SWBD CABLE ASSEMBLY REQUIRED FOR EACH LU3 (J5D004AD) E/W TN1048,TN1058 OR TN1058B CP INSTALLED IN A SM() ARRANGED FOR A CONC RATIO OF 6:1 AND CONNECTED TO A DF E/W 89M1CA21-128 OR 112J1B-128 TRW BLKS. 64 PRS CABLE. SEE FIG. A8 AND NOTE 90. SEE TBL A1 FOR DF BLKS.			215B								
CONNECTORIZED SWBD CABLE ASSEMBLY REQUIRED FOR EACH LU3 (J5D004AD) E/W TN1048,TN1058 OR TN1058B CP INSTALLED IN A SM() ARRANGED FOR A CONC RATIO OF 8:1 AND CONNECTED TO A DF (SWC). 64 PRS CABLE. SEE FIG. A8 AND NOTE 90. SEE TBL A1 FOR DF BLKS.			216A								
CONNECTORIZED SWBD CABLE ASSEMBLY REQUIRED FOR EACH LU3 (J5D004AD) E/W TN1048,TN1058 OR TN1058B CP INSTALLED IN A SM() ARRANGED FOR A CONC RATIO OF 8:1 AND CONNECTED TO A DF E/W 89M1CA21-128 OR 112J1B-128 TRW BLKS. 64 PRS CA. SEE FIG. A8 AND NOTE 90. SEE TBL A1 FOR DF BLKS.			216B								
CONNECTORIZED SWBD CABLE ASSEMBLY REQUIRED FOR EACH LU3 (J5D004AD) E/W TN1048,TN1058 OR TN1058B CP INSTALLED IN A SM() ARRANGED FOR A CONC RATIO OF 10:1 AND CONNECTED TO A DF (SWC). 64 PRS CABLE. SEE FIG. A8 AND NOTE 90. SEE TBL A1 FOR DF BLKS.			217A								
CONNECTORIZED SWBD CABLE ASSEMBLY REQUIRED FOR EACH LU3 (J5D004AD) E/W TN1048,TN1058 OR TN1058B CP INSTALLED IN A SM() ARRANGED FOR A CONC RATIO OF 10:1 AND CONNECTED TO A DF E/W 89M TRW BLKS. 64 PRS CABLE. 89M1CA21-128 OR 112J1B-128 TRW BLKS. 64 PRS CABLE. SEE FIG. A8 AND NOTE 90. SEE TBL A1 FOR BLKS.			217B								

TABLE-A CONTINUED

COPYRIGHT @ 2001 LUCENT TECHNOLOGIES
ALL RIGHTS RESERVED

BT13

INTERCABINET CABLING
FOR
5ESS * SWITCH
*LUCENT TRADEMARK

DWG SIZE C2 | ISSUE 117

PRINTED IN U.S.A.

TABLE A-FEATURES(CONTINUED)

EQUIPMENT				EQUIPMENT OR CIRCUIT DATA					SD EQUIVALENT		
DESCRIPTION	REF NOTE	RAT-ING	LIST OR GROUP	QTY	EQUIPMENT OR CIRCUIT	L/G OR FIG	WRG	APP	SCHEMATIC	FIG	OPT
CONNECTORIZED SWBD CABLE ASSEMBLY REQUIRED FOR EACH LU2 (J5D004AC-2) E/W TN838 CP INSTALLED IN SM() ARRANGED FOR A CONC RATIO OF 4:1 AND CONNECTED TO A DF (SWC). 64 PRS CABLE SEE FIG. A7. DA EFF:11/30/96 FE/RA:NONE		DA	221A								
CONNECTORIZED SWBD CABLE ASSEMBLY REQUIRED FOR EACH LU2 (J5D004AC-2) E/W TN838 CP INSTALLED IN SM() ARRANGED FOR A CONC RATIO OF 6:1 AND CONNECTED TO A DF (SWC). 64 PRS CABLE. SEE FIG. A7. DA EFF:11/30/96 FE/RA:NONE		DA	222A								
CONNECTORIZED SWBD CABLE ASSEMBLY REQUIRED FOR EACH LU2 (J5D004AC-2) E/W TN838 CP INSTALLED IN SM() ARRANGED FOR A CONC RATIO OF 8:1 AND CONNECTED TO A DF (SWC). 64 PRS CABLE. SEE FIG. A7. DA EFF:11/30/96 FE/RA:NONE		DA	223A								
CONNECTORIZED SWBD CABLE ASSEMBLY REQUIRED FOR EACH MOD4 LINE UNIT (J5D004AN) E/W KTU5 CP INSTALLED IN A SM ARRANGED FOR CONCENTRATION RATIO OF 4:1 & CONNECTED TO A DF E/W 711 CONN. (SEE FIG. A3 NOTE 88 AND NOTE 90). 89G1B-128 OR 112G1B-128 OR 2 78G1B-64(SIDE BY SIDE) SEE TBL A1 FOR DF BLKS. DA EFF:03/24/95 FE/RA:NONE		DA	225								
CONNECTORIZED SWBD CABLE ASSEMBLY REQUIRED FOR EACH MOD4 LINE UNIT (J5D004AN) E/W KTU5 CP INSTALLED IN A SM ARRANGED FOR CONCENTRATION RATIO OF 4:1 & CONNECTED TO A DF (SWC). 89E1B-128 OR 112E1B-128 OR 2 78G1B-64(SIDE BY SIDE) (SEE FIG. A3 AND NOTE 90). SEE TBL A1 FOR DF BLKS. DA EFF:03/24/95 FE/RA:NONE		DA	225A								
CONNECTORIZED SWBD CABLE ASSEMBLY REQUIRED FOR EACH MOD4 LINE UNIT (J5D004AN) E/W KTU5 CP INSTALLED IN A SM ARRANGED FOR CONCENTRATION RATIO OF 6:1 & CONNECTED TO A DF E/W 711 CONN. (SEE FIG. A3 AND NOTE 88 AND 90). 89G1B-128 OR 112G1B-128 OR 2 78G1B-64(SIDE BY SIDE) SEE TBL A1 FOR DF BLKS. DA EFF:03/24/95 FE/RA:NONE		DA	226								
CONNECTORIZED SWBD CABLE ASSEMBLY REQUIRED FOR EACH MOD4 LINE UNIT (J5D004AN) E/W KTU5 CP INSTALLED IN A SM ARRANGED FOR CONCENTRATION RATIO OF 6:1 & CONNECTED TO A DF (SWC) 89E1B-128 OR 112E1B-128 OR 2 78G1B-64(SIDE BY SIDE) (SEE FIG. A3 AND NOTE 90). SEE TBL A1 FOR DF BLKS. DA EFF:03/24/95 FE/RA:NONE		DA	226A								

TABLE-A CONTINUED

TABLE A-FEATURES(CONTINUED)

EQUIPMENT				EQUIPMENT OR CIRCUIT DATA					SD EQUIVALENT		
DESCRIPTION	REF NOTE	RAT-ING	LIST OR GROUP	QTY	EQUIPMENT OR CIRCUIT	L/G OR FIG	WRG	APP	SCHEMATIC	FIG	OPT
CONNECTORIZED SWBD CABLE ASSEMBLY REQUIRED FOR EACH MOD4 LINE UNIT (J5D004AN) E/W KTU5 CP INSTALLED IN A SM ARRANGED FOR CONCENTRATION RATIO OF 8:1 & CONNECTED TO A DF E/W 711 CONN. (SEE FIG. A3 AND NOTE 88 AND 90). 89G1B-128 OR 112G1B-128 OR 2 78G1B-64(SIDE BY SIDE) SEE TBL A1 FOR DF BLKS. DA EFF:03/24/95 FE/RA:NONE		DA	227								
CONNECTORIZED SWBD CABLE ASSEMBLY REQUIRED FOR EACH MOD4 LINE UNIT (J5D004AN) E/W KTU5 CP INSTALLED IN A SM ARRANGED FOR CONCENTRATION RATIO OF 8:1 & CONNECTED TO A DF (SWC) 89E1B-128 OR 112E1B-128 OR 2 78G1B-64(SIDE BY SIDE) (SEE FIG. A3 AND NOTE 90). SEE TBL A1 FOR DF BLKS. DA EFF:03/24/95 FE/RA:NONE		DA	227A								
ADAPTER CABLE ('Y' CABLE) FOR A PRE-CONDITIONED 5ESS* SWITCH WHEN DSX-1 IS WIRED FOR A DLTU2 (J5D024AA) CABLE GROUP ED5D500-21 G145 AND SM() IS EQPD WITH DLTU1 (J5D003AD-1). 'IN' AND 'OUT' CABLE 607C. SEE FIG. X2. (FOR THIS OPTION INSTALLER MUST FIELD WIRE 711-64 CONN. SEE GROUP 332X FOR WIRING AND ORDERING INFO). *AT&T REGISTERED			330X								
ADAPTER CABLE ('Y' CABLE) FOR A PRE-CONDITIONED 5ESS* SWITCH WHEN DSX-1 IS WIRED FOR A DLTU2 (J5D024AA) CABLE GROUP ED5D500-21 G145A AND SM() IS EQPD WITH DLTU1 (J5D003AD). 'IN' AND 'OUT' CABLE 1249012A. SEE FIG. X2. (FOR THIS OPTION INSTALLER MUST FIELD WIRE 711-64 CONN. SEE GROUP 333X FOR WIRING AND ORDERING INFO). *AT&T REGISTERED			331X								
711RAB1-64 CONNECTOR WIRING AND MATERIAL IS REQUIRED IN ADDITION TO G330X. SEE FIG. X3 FOR CONNECTING INFORMATION. CABLE PREPARATION, CONNECTOR WIRING AND STAMPING IS DONE BY THE INSTALLER ON THE SITE.			332X								
711RAD1-64 CONNECTOR WIRING AND MATERIAL IS REQUIRED IN ADDITION TO G331X. SEE FIG. X3 FOR CONNECTING INFORMATION. CABLE PREPARATION, CONNECTOR WIRING AND STAMPING IS DONE BY THE INSTALLER ON THE SITE.			333X								

TABLE-A CONTINUED

COPYRIGHT @ 2001 LUCENT TECHNOLOGIES
ALL RIGHTS RESERVED

BT13

INTERCABINET CABLING
FOR
5ESS * SWITCH
*LUCENT TRADEMARK

DWG SIZE C2 | ISSUE 117

LUCENT TECHNOLOGIES INC | ED5D500-21 | SHEET A34 OF 292

PRINTED IN U.S.A.

TABLE A-FEATURES(CONTINUED)

EQUIPMENT				EQUIPMENT OR CIRCUIT DATA					SD EQUIVALENT		
DESCRIPTION	REF NOTE	RAT-ING	LIST OR GROUP	QTY	EQUIPMENT OR CIRCUIT	L/G OR FIG	WRG	APP	SCHEMATIC	FIG	OPT
ADAPTER CABLE (’Y’ CABLE) FOR A PRE-CONDITIONED 5ESS* SWITCH WHEN DSX-1 IS WIRED FOR A DLTU1 (J5D003AD-1) CABLE GROUP ÈD5D500-21 G130 AND SM() IS EQPD WITH DLTU2 (J5D024AA). ’IN’ AND ’OUT’ CABLE 609C. SEE FIG. X1. (NO INSTALLER FIELD WIRING IS REQD FOR THIS OPTION). *AT&T REGISTERED			345X								
ADAPTER CABLE (’Y’ CABLE) FOR A PRE-CONDITIONED 5ESS* SWITCH WHEN DSX-1 IS WIRED FOR A DLTU1 (J5D003AD-1) CABLE GROUP ÈD5D500-21 G130B AND SM() IS EQPD WITH DLTU2 (J5D024AA). ’IN’ AND ’OUT’ CABLE 1249020C. SEE FIG. X1. (NO INSTALLER FIELD WIRING IS REQD FOR THIS OPTION). *AT&T REGISTERED			346X								
CONNECTORIZED SWITCHBOARD CABLE PROVIDING 64KBPS CENTRALIZED CLOCK INTERFACE FOR DLTU2 TO DIGITAL CLOCK SUPPLY. (TN4011 PACK/1249 TYPE CA)			350								
CONNECTORIZED SWITCHBOARD CABLE PROVIDING 64KBPS CENTRALIZED CLOCK INTERFACE FOR DLTU2 TO DIGITAL CLOCK SUPPLY. (TN4011 PACK/600 TYPE CA)			350A								
CONNECTORIZED SWITCHBOARD CABLE PROVIDING 64KBPS CENTRALIZED CLOCK INTERFACE FOR DLTU2 TO DF. (TN4011 PACK/1249 TYPE CA)			351								
CONNECTORIZED SWITCHBOARD CABLE PROVIDING 64KBPS CENTRALIZED CLOCK INTERFACE FOR DLTU2 TO DF. (TN4011 PACK/600 TYPE CA)			351A								
CONNECTORIZED SWITCHBOARD CABLE PROVIDING 64KBPS CENTRALIZED CLOCK INTERFACE FOR DLTU2 TO CMCU. (TN4011 PACK/600 TYPE CA)			352								
CONNECTORIZED SWITCHBOARD CABLE PROVIDING 64KBPS CENTRALIZED CLOCK INTERFACE FOR DLTU3 TO DIGITAL CLOCK SUPPLY. (TN4011 PACK/1249 TYPE CA)			353								
CONNECTORIZED SWITCHBOARD CABLE PROVIDING 64KBPS CENTRALIZED CLOCK INTERFACE FOR DLTU3 TO DIGITAL CLOCK SUPPLY. (TN4011 PACK/600 TYPE CA)			353A								
CONNECTORIZED SWITCHBOARD CABLE PROVIDING 64KBPS CENTRALIZED CLOCK INTERFACE FOR DLTU3 TO DF. (TN4011 PACK/1249 TYPE CA)			354								
CONNECTORIZED SWITCHBOARD CABLE PROVIDING 64KBPS CENTRALIZED CLOCK INTERFACE FOR DLTU3 TO DF. (TN4011 PACK/600 TYPE CA)			354A								
CONNECTORIZED SWITCHBOARD CABLE PROVIDING 64KBPS CENTRALIZED CLOCK INTERFACE FOR DLTU3 TO CMCU. (TN4011 PACK/600 TYPE CA)			355								
CONNECTORIZED SWBD CABLE ASSEMBLY FOR DNU-S TO DSX (STSX-1 COAX PAIR)735A CA, MAX. LENGTH = 225 FEET. (WHEN LOCATED IN CENTRAL OFFICE)			370								
CONNECTORIZED SWBD CABLE ASSEMBLY FOR DNU-S SIDE 0 OR 1 TO DSX (STSX-1 COAX 8 PAIR) WP93875L6 CA, MAX. LENGTH = 225 FEET. (WHEN LOCATED IN CENTRAL OFFICE)			370A								

TABLE-A CONTINUED

TABLE A-FEATURES(CONTINUED)

EQUIPMENT				EQUIPMENT OR CIRCUIT DATA					SD EQUIVALENT		
DESCRIPTION	REF NOTE	RAT-ING	LIST OR GROUP	QTY	EQUIPMENT OR CIRCUIT	L/G OR FIG	WRG	APP	SCHEMATIC	FIG	OPT
CONNECTORIZED SWBD CABLE ASSEMBLY FOR DNU-S TO DSX (STSX-1 COAX PAIR)734D CA, FOR LENGTHS GREATER THAN 225 FEET UP TO A MAX. OF 450 FEET. (WHEN LOCATED IN CENTRAL OFFICE)			371								
CONNECTORIZED SWBD CABLE ASSEMBLY FOR DNU-S TO DSX (STSX-1 COAX PAIR)734D CA. FE/RA:NONE DA EFF:08/05/94		DA	372								
CONNECTORIZED SWBD CABLE ASSEMBLY FOR DNU-S TO DSX (STSX-1 COAX PAIR)735A CA, MAX. LENGTH OF 225 FEET. DSX TERMINATION WITH BNC TYPE CONNECTOR (WHEN LOCATED IN CENTRAL OFFICE) REPL:NONE			373								
CONNECTORIZED SWBD CABLE ASSEMBLY FOR DNU-S TO DSX (STSX-1 COAX PAIR)735A CA, WITH LENGTHS NO GREATER THAN 225 FEET TERMINATING ON A MISC BRIDGE REPEATER BAY AND THEN UP TO 225 FEET OF 734D COAX (COMBINED MAX OF 450 FT) TO A DSX TERMINATING WITH A BNC TYPE CONNECTOR. (WHEN LOCATED IN CENTRAL OFFICE) REPL:NONE			374								
CONNECTORIZED SWBD CABLE 1175ARD RED JACKET REQUIRED FOR APR-AUTO POWER RECOVERY FEATURE (TN1077F) ON MCTU2 OR MCTU3 (EXTERNAL CLOCK LEADS) FOR BITS BOX , USED IN ORM, AWS OR VCDX APPLICATIONS WITH AN EXTERNAL CLOCK.			380								
CONNECTORIZED SWBD CABLE 1175ARD RED JACKET REQUIRED FOR NON-APR/AUTO POWER RECOVERY FEATURE(TN1077F) ON MCTU2 OR MCTU3 (EXTERNAL CLK LEADS) FOR BITS BOX, USED FOR ORM, AWS OR VCDX APPLICATION WITH AN EXTERNAL CLOCK.			381								
MTB CABLE ASSEMBLIES REQUIRED FROM COMBINE SERVICE UNIT(CSU) TO DCTU.			400								
MTB CABLE ASSEMBLIES REQUIRED FROM COMBINE SERVICE UNIT(CSU) TO LU2/LU3.			401								
MTB CABLE ASSEMBLIES REQUIRED FROM COMBINE SERVICE UNIT(CSU) TO TU.			402								
MTB CABLE ASSEMBLIES REQUIRED FROM COMBINE SERVICE UNIT(CSU) TO TSTTRK.			403								

TABLE-A CONTINUED

COPYRIGHT @ 2001 LUCENT TECHNOLOGIES
ALL RIGHTS RESERVED

BT13

INTERCABINET CABLING
FOR
5ESS * SWITCH
*LUCENT TRADEMARK

DWG SIZE C2 | ISSUE 117

PRINTED IN U.S.A.

TABLE A-FEATURES(CONTINUED)

EQUIPMENT				EQUIPMENT OR CIRCUIT DATA						SD EQUIVALENT		
DESCRIPTION	REF NOTE	RAT-ING	LIST OR GROUP	QTY	EQUIPMENT OR CIRCUIT	L/G OR FIG	WRG	APP	SCHEMATIC	FIG	OPT
MTB CABLE ASSEMBLIES REQUIRED FROM COMBINE SERVICE UNIT(CSU) TO ISLU2.			404								
MTB CABLE ASSEMBLY REQUIRED FROM COMBINED SERVICE UNIT (CSU) TO ISLU.			405								
CONNECTORIZED CABLE ASSEMBLY REQ FOR SM2000 TSIU4 (UM74B) OR TSIU4-2 (UM74C) LINK TO DFI2 (TN1415 ONLY) EXTERNAL TIMING REFERENCE-30 CH (120 OHM-1.024MB/SEC DATA RATE) (SIDE 0/1)			450								
CONNECTORIZED CABLE ASSEMBLY REQ FOR SM2000 TSIU4 (UM74B) OR TSIU4-2 (UM74C) LINK TO DFI2 (TN1415 ONLY) EXTERNAL TIMING REFERENCE FOR EMC TREATMENT APPLICATION-30 CH (120 OHM-1.024MB/SEC DATA RATE) (SIDE 0/1)			451								
CONNECTORIZED CABLE ASSEMBLY REQ FOR SM2000 TSIU4 (UM74B) OR TSIU4-2 (UM74C) LINK TO BITS BOX EXTERNAL CLOCK SOURCE OR DIGITAL CROSS CONNECT/ OFFICE BRIDGING REPEATER BAY- 30 CH (120 OHM-1.024 MB/SEC DATA RATE) SIDE 0/1			452								
CONNECTORIZED CABLE ASSEMBLY REQ FOR SM2000 TSIU4 (UM74B) OR TSIU4-2 (UM74C) LINK TO BITS BOX EXTERNAL CLOCK SOURCE OR DIGITAL CROSS CONNECT/ OFFICE BRIDGING REPEATER BAY IN EMC TREATMENT APPLICATION- 30 CH (120 OHM-1.024 MB/SEC DATA RATE) SIDE 0/1			453								
CONNECTORIZED CABLE ASSEMBLY 1175ARD RED JACKET REQ FOR SM2000 TSIU4 (UM74B) OR TSIU4-2 (UM74C) LINK TO BITS BOX EXTERNAL CLOCK SOURCE OR DIGITAL CROSS CONNECT/ OFFICE BRIDGING REPEATER BAY- 24 CH (100 OHM-0.772 MB/SEC DATA RATE) SIDE 0/1			454								
CONNECTORIZED CABLE ASSEMBLY 1175ARD RED JACKET REQ FOR SM2000 TSIU4 (UM74B) OR TSIU4-2 (UM74C) LINK TO BITS BOX EXTERNAL CLOCK SOURCE OR DIGITAL CROSS CONNECT/ OFFICE BRIDGING REPEATER BAY IN EMC TREATMENT APPLICATION- 24 CH (100 OHM-0.772 MB/SEC DATA RATE) SIDE 0/1			455								
BULK SWITCHBOARD CABLE REQUIRED FOR A TIP/RING/SLEEVE/GRD CABLE BETWEEN THE NO TEST TRUNK UNIT (NTT) AND THE MDF (SWC) PROVIDING CONNECTIONS FOR ONE AI-TDB-107 CIRCUIT PACK. REPL:NONE	199		460								
BULK SWITCHBOARD CABLE REQUIRED FOR A T1 CABLE BETWEEN THE NO TEST TRUNK UNIT (NTT) AND THE DSX (SWC). WHEN REQUIRED CABLE IS OVER 450 FT. TO A MAX. OF 655 FT. SEE GROUP 461A WHEN MAX. CABLE LENGTH IS LESS THAN 450 FT. REPL:NONE	199		461								
BULK SWITCHBOARD CABLE REQUIRED FOR A T1 CABLE BETWEEN THE NO TEST TRUNK UNIT (NTT) AND THE DSX (SWC) WHEN MAX. REQUIRED CABLE LENGTH IS 450 FT. OR LESS. REPL:NONE	199		461A								

TABLE-A CONTINUED

TABLE A-FEATURES(CONTINUED)

EQUIPMENT				EQUIPMENT OR CIRCUIT DATA						SD EQUIVALENT		
DESCRIPTION	REF NOTE	RAT-ING	LIST OR GROUP	QTY	EQUIPMENT OR CIRCUIT	L/G OR FIG	WRG	APP	SCHEMATIC	FIG	OPT
BULK SWITCHBOARD CABLE REQUIRED FOR A E1 (30 CHNL/120 OHM) CABLE BETWEEN THE NO TEST TRUNK UNIT (NTT) AND THE DSX (SWC). MAX. LENGTH IS 450 FT. INTERNATIONAL APPLICATION ONLY. REPL:NONE	199		462								
CONNECTORIZED CABLE ASSEMBLY REQUIRED FOR EACH AI-TDB-107 CP PROVIDED IN A NO TEST TRUNK UNIT (NTT) MOUNTED IN THE MISC CABINET WHEN THE METALLIC TEST BUS (MTB) IS DIRECTLY INTERCONNECTED TO ONE OR TWO VERTICALLY ADJACENT SHELFS OF THE MODULAR METALLIC SERVICE UNIT (MMSU) LOCATED IN A LTP CABINET AND ASSIGNED TO PORTS 0-7. REPL:NONE			463								
CONNECTORIZED CABLE ASSEMBLY REQUIRED FOR EACH AI-TDB-107 CP PROVIDED IN A NO TEST TRUNK UNIT (NTT) MOUNTED IN THE MISC CABINET WHEN THE METALLIC TEST BUS (MTB) IS DIRECTLY INTERCONNECTED TO ONE OR TWO VERTICALLY ADJACENT SHELFS OF THE MODULAR METALLIC SERVICE UNTI (MMSU) LOCATED IN A LTP CABINET AND ASSIGNED TO PORTS 8-14. REPL:NONE			464								
CONNECTORIZED SWBD CABLE ASSEMBLY REQUIRED FOR EACH LU3 (J5D004AD) E/W TN1048,TN1058 OR TN1058B CP INSTALLED IN A SMC( ) ARRANGED FOR A CONC RATIO OF 4:1 WITH EVEN NUMBER SWITCHES OF THE LU3 TERMINATING ON ONE DISTRIBUTING FRAME AND THE ODD NUMBER SWITCHES OF THE SAME LU3 TERMINATING ON A DIFFERENT DISTRIBUTING FRAME (SWC) 128 PAIR CABLE. SEE FIG.A9. SEE TBL A1 FOR DF BLKS.			900								
CONNECTORIZED SWBD CABLE ASSEMBLY REQUIRED FOR EACH LU3 (J5D004AD) E/W TN1048,TN1058 OR TN1058B CP INSTALLED IN A SMC( ) ARRANGED FOR A CONC RATIO OF 6:1 WITH EVEN NUMBER SWITCHES OF THE LU3 TERMINATING ON ONE DISTRIBUTING FRAME AND THE ODD NUMBER SWITCHES OF THE SAME LU3 TERMINATING ON A DIFFERENT DISTRIBUTING FRAME (SWC) 64 PAIR CABLE. SEE FIG.A9. SEE TBL A1 FOR DF BLKS.			901								

TABLE-A CONTINUED

COPYRIGHT @ 2001 LUCENT TECHNOLOGIES
ALL RIGHTS RESERVED

BT13

INTERCABINET CABLING
FOR
5ESS * SWITCH
*LUCENT TRADEMARK

DWG SIZE C2 | ISSUE 117

LUCENT TECHNOLOGIES INC | ED5D500-21 | SHEET A36 OF 292

PRINTED IN U.S.A.

TABLE A-FEATURES(CONTINUED)

EQUIPMENT				EQUIPMENT OR CIRCUIT DATA					SD EQUIVALENT		
DESCRIPTION	REF NOTE	RAT-ING	LIST OR GROUP	QTY	EQUIPMENT OR CIRCUIT	L/G OR FIG	WRG	APP	SCHEMATIC	FIG	OPT
CONNECTORIZED SWITCHBOARD CABLE ASSEMBLY REQUIRED FOR ALARM SCAN POINTS FOR THE FIRST FAN UNIT (J5D003BE) MOUNTED IN MISC CABINET. (REQUIRED FOR REMOTE OFFICE OR HOST E/W CM1. (COST EFFECTIVENESS GROUP REPLACING G34).			34CE								
CONNECTORIZED SWITCHBOARD CABLE ASSEMBLY REQUIRED FOR ALARM SCAN POINTS FOR THE FIRST FAN UNIT (J5D003BE) MOUNTED IN MISC CABINET OR MOUNTED IN DATA SET CABINET IN A HOST OFFICE E/W CM2.			34CF								
CONNECTORIZED SWBD CABLE ASSEMBLIES REQUIRED FOR OFFICE ALARM UNIT MOUNTED IN MISC CABINET CONNECTED TO A PROC CONT CAB (PCCA). CENTRAL OFFICE ONLY-NOT RSM). SEE FIG. J. (COST EFFECTIVENESS GROUP REPLACING GROUP 35 (TWENTY SIX CABLES WITH TEN CABLES).			35CE								
CONNECTORIZED SWBD CABLE ASSEMBLIES REQUIRED IN ADDITION TO GR 35CE WHEN A OFFICE ALARM UNIT MOUNTED IN MISC CABINET CONNECTED TO A 3B21D (CSPC).			35CG								
CONNECTORIZED SWBD CABLE ASSEMBLIES REQUIRED IN ADDITION TO GR 35CE WHEN A OFFICE ALARM UNIT MOUNTED IN MISC CABINET CONNECTED TO A 3B20D (CPPA 0/1).			35CH								

END OF TABLE-A

COPYRIGHT @ 2001 LUCENT TECHNOLOGIES
ALL RIGHTS RESERVED

BT13

INTERCABINET CABLING
FOR
5ESS * SWITCH
*LUCENT TRADEMARK

DWG SIZE C2 | ISSUE 117

LUCENT TECHNOLOGIES INC | ED5D500-21 | SHEET A37 OF 292

PRINTED IN U.S.A.

CONNECTORIZED CABLING

ITEM	LIST OR GROUP	NBR RECD	CABLE IDENT	CABLE CODE	B DIM	FROM							TO							ROUTE	SHLD	NOTE	REMARKS
						FRAME OR UNIT	EQL	TERM	POS	DROP LGTH	WIRING DIAGRAM	FIGURE	FRAME OR UNIT	EQL	TERM	POS	DROP LGTH	WIRING DIAGRAM	FIGURE				
10	4	1	JL101	105435291	X-DIM	SM// SMC1 MCTU	136- 084	332	L	5-0	SD5D118-02		TMS0	/ /- / /	/ /		SEE TBL BD	SD5D147-01			1	66 84	FORM PER ED5D518-30 G 17 XMT SEE TBL E1
12	4	1	JL103	105435309	X-DIM	SM// SMC1 MCTU	136- 084	332	L	5-0	SD5D118-02		TMS0	/ /- / /	/ /		SEE TBL BD	SD5D147-01			1	66 84	FORM PER ED5D518-30 G 18 REC SEE TBL E1
14	4	1	JL105	105435291	X-DIM	SM// SMC1 MCTU	136- 084	300	L	5-0	SD5D118-02		TMS0	/ /- / /	/ /		SEE TBL BD	SD5D147-01			1	66 84	FORM PER ED5D518-30 G 17 XMT SEE TBL E1
16	4	1	JL107	105435309	X-DIM	SM// SMC1 MCTU	136- 084	300	L	5-0	SD5D118-02		TMS0	/ /- / /	/ /		SEE TBL BD	SD5D147-01			1	66 84	FORM PER ED5D518-30 G 18 REC SEE TBL E1
18	4	1	JL102	105435291	X-DIM	SM// SMC1 MCTU	136- 098	332	R	5-0	SD5D118-02		TMS1	/ /- / /	/ /		SEE TBL BE	SD5D147-01			1	66 84	FORM PER ED5D518-30 G 17 XMT SEE TBL E1
20	4	1	JL104	105435309	X-DIM	SM// SMC1 MCTU	136- 098	332	R	5-0	SD5D118-02		TMS1	/ /- / /	/ /		SEE TBL BE	SD5D147-01			1	66 84	FORM PER ED5D518-30 G 18 REC SEE TBL E1
22	4	1	JL106	105435291	X-DIM	SM// SMC1 MCTU	136- 098	300	R	5-0	SD5D118-02		TMS1	/ /- / /	/ /		SEE TBL BE	SD5D147-01			1	66 84	FORM PER ED5D518-30 G 17 XMT SEE TBL E1
24	4	1	JL108	105435309	X-DIM	SM// SMC1 MCTU	136- 098	300	R	5-0	SD5D118-02		TMS1	/ /- / /	/ /		SEE TBL BE	SD5D147-01			1	66 84	FORM PER ED5D518-30 G 18 REC SEE TBL E1
30	4A	1	JL101	105435291	X-DIM	SM// SMC1 MCTU2	119- 156 OR 145- 156	332	R	5-9 OR 3-8	SD5D160-01		TMS0	/ /- / /	/ /		SEE TBL BD	SD5D147-01			1	66 84	FORM PER ED5D518-30 G 17 XMT SEE TBL E1
32	4A	1	JL103	105435309	X-DIM	SM// SMC1 MCTU2	119- 156 OR 145- 156	332	R	5-9 OR 3-8	SD5D160-01		TMS0	/ /- / /	/ /		SEE TBL BD	SD5D147-01			1	66 84	FORM PER ED5D518-30 G 18 REC SEE TBL E1
34	4A	1	JL105	105435291	X-DIM	SM// SMC1 MCTU2	119- 156 OR 145- 156	300	R	5-9 OR 3-8	SD5D160-01		TMS0	/ /- / /	/ /		SEE TBL BD	SD5D147-01			1	66 84	FORM PER ED5D518-30 G 17 XMT SEE TBL E1
36	4A	1	JL107	105435309	X-DIM	SM// SMC1 MCTU2	119- 156 OR 145- 156	300	R	5-9 OR 3-8	SD5D160-01		TMS0	/ /- / /	/ /		SEE TBL BD	SD5D147-01			1	66 84	FORM PER ED5D518-30 G 18 REC SEE TBL E1
38	4A	1	JL102	105435291	X-DIM	SM// SMC1 MCTU2	128- 156 OR 153- 156	332	R	5-1 OR 3-0	SD5D160-01		TMS1	/ /- / /	/ /		SEE TBL BE	SD5D147-01			1	66 84	FORM PER ED5D518-30 G 17 XMT SEE TBL E1

COPYRIGHT @ 2001 LUCENT TECHNOLOGIES
ALL RIGHTS RESERVED

BT13

INTERCABINET CABLING
FOR
5ESS * SWITCH
*LUCENT TRADEMARK

DWG SIZE C2 | ISSUE 117

PRINTED IN U.S.A.

CONNECTORIZED CABLING

ITEM	LIST OR GROUP	NBR RECD	CABLE IDENT	CABLE CODE	B DIM	FROM							TO							ROUTE	SHLD	NOTE	REMARKS
						FRAME OR UNIT	EQL	TERM	POS	DROP LGTH	WIRING DIAGRAM	FIGURE	FRAME OR UNIT	EQL	TERM	POS	DROP LGTH	WIRING DIAGRAM	FIGURE				
40	4A	1	JL104	105435309	X-DIM	SM// SMC1 MCTU2	128- 156 OR 153- 156	332	R	5-1 OR 3-0	SD5D160-01		TMS1	/ /- / /	/ /		SEE TBL BE	SD5D147-01			1	66 84	FORM PER ED5D518-30 G 18 REC SEE TBL E1
42	4A	1	JL106	105435291	X-DIM	SM// SMC1 MCTU2	128- 156 OR 153- 156	300	R	5-1 OR 3-0	SD5D160-01		TMS1	/ /- / /	/ /		SEE TBL BE	SD5D147-01			1	66 84	FORM PER ED5D518-30 G 17 XMT SEE TBL E1
44	4A	1	JL108	105435309	X-DIM	SM// SMC1 MCTU2	128- 156 OR 153- 156	300	R	5-1 OR 3-0	SD5D160-01		TMS1	/ /- / /	/ /		SEE TBL BE	SD5D147-01			1	66 84	FORM PER ED5D518-30 G 18 REC SEE TBL E1
50	4B	1	JL7	1801B	X-DIM	SM// SMC1 MCTU2	119- 156 OR 145- 156	332 345	R	5-9 OR 3-8	SD5D160-01		CM1 TMS0	/ /- / /	/ /	SEE TBL BD	SEE TBL BD	SD5D147-01			1	199 66	FORM PER ED5D518-30 G 2 FOR PORT ASGNT SEE TBL CA. SEE MISC TABLE T
55	4B	1	JL5	1801B	X-DIM	SM// SMC1 MCTU2	119- 156 OR 145- 156	300 313	R	5-9 OR 3-8	SD5D160-01		CM1 TMS0	/ /- / /	/ /	SEE TBL BD	SEE TBL BD	SD5D147-01			1	199 66	FORM PER ED5D518-30 G 2 FOR PORT ASGNT SEE TBL CA. SEE MISC TABLE T
60	4B	1	JL8	1801B	X-DIM	SM// SMC1 MCTU2	128- 156 OR 153- 156	332 345	R	5-1 OR 3-0	SD5D160-01		CM1 TMS1	/ /- / /	/ /	SEE TBL BE	SEE TBL BE	SD5D147-01			1	199 66	FORM PER ED5D518-30 G 2 FOR PORT ASGNT SEE TBL CA. SEE MISC TABLE T
65	4B	1	JL6	1801B	X-DIM	SM// SMC1 MCTU2	128- 156 OR 153- 156	300 313	R	5-1 OR 3-0	SD5D160-01		CM1 TMS1	/ /- / /	/ /	SEE TBL BE	SEE TBL BE	SD5D147-01			1	199 66	FORM PER ED5D518-30 G 2 FOR PORT ASGNT SEE TBL CA. SEE MISC TABLE T
70	4C	1	JL101	105435291	X-DIM	TMS0	036- 086	100	L	59	SD5D147-01		MSG0 MICU2 0	019- 120	100	R	6-8	SD5D146-01			1	66 84	
75	4C	1	JL103	105435309	X-DIM	TMS0	036- 086	113	L	5-9	SD5D147-01		MSG0 MICU2 0	019- 120	113	R	6-8	SD5D146-01			1	66 84	
80	4C	1	JL102	105435291	X-DIM	TMS1	136- 086	100	L	5-9	SD5D147-01		MSG1 MICU2 1	119- 120	100	R	6-7	SD5D146-01			1	66 84	
85	4C	1	JL104	105435291	X-DIM	TMS1	136- 086	113	L	59	SD5D147-01		MSG1 MICU2 1	119- 120	113	R	6-7	SD5D146-01			1	66 84	
90	5A	1	JL9	1800B	X-DIM	SM / / SMC // MCTU	136- 084	332	L	4-8	SD-5D118-01		CM2 /SIDE 0/	/ /- / /	/ /	L	SEE RMKS	SD-5D140-01			1	199 66	FORM PER ED5D518-30 G 3 SEE TBL AA (PORT ASSIGNMENT),TBL BW (DROP LENGTHS) AND FIG.M2 WHEN ARRANGED FOR A SINGLE FABRIC. SEE TBL AB (PORT ASSIGNMENT), TBL BX-1 (DROP LENGTHS) AND FIG. M3 WHEN ARRANGED FOR A DUAL FABRIC. DA SEE MISC TABLE T

COPYRIGHT @ 2001 LUCENT TECHNOLOGIES
ALL RIGHTS RESERVED

BT13

INTERCABINET CABLING
FOR
5ESS * SWITCH
*LUCENT TRADEMARK

DWG SIZE C2 | ISSUE 117

PRINTED IN U.S.A.

CONNECTORIZED CABLING

ITEM	LIST OR GROUP	NBR RECD	CABLE IDENT	CABLE CODE	B DIM	FROM							TO							ROUTE	SHLD	NOTE	REMARKS
						FRAME OR UNIT	EQL	TERM	POS	DROP LGTH	WIRING DIAGRAM	FIGURE	FRAME OR UNIT	EQL	TERM	POS	DROP LGTH	WIRING DIAGRAM	FIGURE				
100	5A	1	JL11	1800B	X-DIM	SM / / SMC // MCTU	136- 084	345	L	4-6	SD-5D118-01		CM2 /SIDE 0/	/ /- / /	/ /	L	SEE RMKS	SD-5D140-01			1	199 66	FORM PER ED5D518-30 G 4 SEE TBL AA (PORT ASSIGNMENT), TBL BW (DROP LENGTHS) AND FIG.M2 WHEN ARRANGED FOR A SINGLE FABRIC. SEE TBL AB (PORT ASSIGNMENT), TBL BX-1 (DROP LENGTH) AND FIG.M3 WHEN ARRANGED FOR A DUAL FABRIC. SEE MISC TABLE T
110	5A	1	JL13	1800B	X-DIM	SM / / SMC // MCTU	136- 084	313	L	5-4	SD-5D118-01		CM2 /SIDE 0/	/ /- / /	/ /	L	SEE RMKS	SD-5D140-01			1	199 66	FORM PER ED5D518-30 G 3 SEE TBL AA (PORT ASSIGNMENT), TBL BW (DROP LENGTHS) AND FIG.M2 WHEN ARRANGED FOR A SINGLE FABRIC. SEE TBL AB (PORT ASSIGNMENT), TBL BX (DROP LENGTHS) AND FIG. M3 WHEN ARRANGED FOR A DUAL FABRIC. DA SEE MISC TABLE T
120	5A	1	JL15	1800B	X-DIM	SM / / SMC // MCTU	136- 084	300	L	5-2	SD-5D118-01		CM2 /SIDE 0/	/ /- / /	/ /	L	SEE RMKS	SD-5D140-01			1	199 66	FORM PER ED5D518-30 G 4 SEE TBL AA (PORT ASSIGNMENT), TBL BW (DROP LENGTHS) AND FIG.M2 WHEN ARRANGED FOR A SINGLE FABRIC. SEE TBL AB (PORT ASSIGNMENT), TBL BX (DROP LENGTH) AND FIG. M3 WHEN ARRANGED FOR A DUAL FABRIC. SEE MISC TABLE T
130	5A	1	JL10	1800B	X-DIM	SM / / SMC // MCTU	136- 098	332	R	4-9	SD-5D118-01		CM2 /SIDE 1/	/ /- / /	/ /	L	SEE RMKS	SD-5D140-01			1	199 66	FORM PER ED5D518-30 G 3 SEE TBL AA (PORT ASSIGNMENT), TBL BW (DROP LENGTHS) AND FIG. M2 WHEN ARRANGED FOR A SINGLE FABRIC. SEE TBL AB (PORT ASSIGNMENT), TBL BX3 (DROP LENGTHS) AND FIG. M3 WHEN ARRANGED FOR A DUAL FABRIC. DA SEE MISC TABLE T
140	5A	1	JL12	1800B	X-DIM	SM / / SMC // MCTU	136- 098	345	R	4-7	SD-5D118-01		CM2 /SIDE 1/	/ /- / /	/ /	L	SEE RMKS	SD-5D140-01			1	199 66	FORM PER ED5D518-30 G 4 SEE TBL AA (PORT ASSIGNMENT), TBL BW (DROP LENGTHS) AND FIG.M2 WHEN ARRANGED FOR A SINGLE FABRIC. SEE TBL AB (PORT ASSIGNMENT), TBL BX3 (DROP LENGTH) AND FIG.M3 WHEN ARRANGED FOR A DUAL FABRIC. SEE MISC TABLE T
150	5A	1	JL14	1800B	X-DIM	SM / / SMC // MCTU	136- 098	313	R	5-5	SD-5D118-01		CM2 /SIDE 1/	/ /- / /	/ /	L	SEE RMKS	SD-5D140-01			1	199 66	FORM PER ED5D518-30 G 3 SEE TBL AA (PORT ASSIGNMENT), TBL BW (DROP LENGTHS) AND FIG.M2 WHEN ARRANGED FOR A SINGLE FABRIC. SEE TBL AB (PORT ASSIGNMENT), TBL BX2 (DROP LENGTHS) AND FIG. M3 WHEN ARRANGED FOR A DUAL FABRIC. DA SEE MISC TABLE T
160	5A	1	JL16	1800B	X-DIM	SM / / SMC // MCTU	136- 098	300	R	5-3	SD-5D118-01		CM2 /SIDE 1/	/ /- / /	/ /	L	SEE RMKS	SD-5D140-01			1	199 66	FORM PER ED5D518-30 G 4 SEE TBL AA (PORT ASSIGNMENT), TBL BW (DROP LENGTHS) AND FIG.M2 WHEN ARRANGED FOR A SINGLE FABRIC. SEE TBL AB (PORT ASSIGNMENT), TBL BX2 (DROP LENGTH) AND FIG.M3 WHEN ARRANGED FOR A DUAL FABRIC. SEE MISC TABLE T
161	5B	1	JL9	1800B	X-DIM	SM / / SMC // MCTU2	119- 156 OR 145-156	332	R	5-9 OR 3-8	SD-5D160-01		CM2 /SIDE 0/	/ /- / /	/ /	L	SEE RMKS	SD-5D140-01			1	199 66	FORM PER ED5D518-30 G 3 SEE TBL AA (PORT ASSIGNMENT),TBL BW (DROP LENGTHS) AND FIG.M2 WHEN ARRANGED FOR A SINGLE FABRIC. SEE TBL AB (PORT ASSIGNMENT), TBL BX-1 (DROP LENGTHS) AND FIG. M3 WHEN ARRANGED FOR A DUAL FABRIC. DA SEE MISC TABLE T
162	5B	1	JL11	1800B	X-DIM	SM / / SMC // MCTU2	119- 156 OR 145-156	345	R	5-9 OR 3-8	SD-5D160-01		CM2 /SIDE 0/	/ /- / /	/ /	L	SEE RMKS	SD-5D140-01			1	199 66	FORM PER ED5D518-30 G 4 SEE TBL AA (PORT ASSIGNMENT), TBL BW (DROP LENGTHS) AND FIG.M2 WHEN ARRANGED FOR A SINGLE FABRIC. SEE TBL AB (PORT ASSIGNMENT), TBL BX-1 (DROP LENGTH) AND FIG.M3 WHEN ARRANGED FOR A DUAL FABRIC. SEE MISC TABLE T

COPYRIGHT @ 2001 LUCENT TECHNOLOGIES
ALL RIGHTS RESERVED

BT13

INTERCABINET CABLING
FOR
5ESS * SWITCH
*LUCENT TRADEMARK

DWG SIZE C2 | ISSUE 117

LUCENT TECHNOLOGIES INC | ED5D500-21 | SHEET A40 OF 292

PRINTED IN U.S.A.

CONNECTORIZED CABLING

ITEM	LIST OR GROUP	NBR RECD	CABLE IDENT	CABLE CODE	B DIM	FROM							TO							ROUTE	SHLD	NOTE	REMARKS
						FRAME OR UNIT	EQL	TERM	POS	DROP LGTH	WIRING DIAGRAM	FIGURE	FRAME OR UNIT	EQL	TERM	POS	DROP LGTH	WIRING DIAGRAM	FIGURE				
163	5B	1	JL13	1800B	X-DIM	SM / / SMC // MCTU2	119- 156 OR 145-156	313	R	5-9 OR 3-8	SD-5D160-01		CM2 /SIDE 0/	/ /- / /	/ /	L	SEE RMKS	SD-5D140-01			1	199 66	FORM PER ED5D518-30 G 3 SEE TBL AA (PORT ASSIGNMENT), TBL BW (DROP LENGTHS) AND FIG.M2 WHEN ARRANGED FOR A SINGLE FABRIC. SEE TBL AB (PORT ASSIGNMENT), TBL BX (DROP LENGTHS) AND FIG. M3 WHEN ARRANGED FOR A DUAL FABRIC. DA SEE MISC TABLE T
164	5B	1	JL15	1800B	X-DIM	SM / / SMC // MCTU2	119- 156 OR 145-156	300	R	5-9 OR 3-8	SD-5D160-01		CM2 /SIDE 0/	/ /- / /	/ /	L	SEE RMKS	SD-5D140-01			1	199 66	FORM PER ED5D518-30 G 4 SEE TBL AA (PORT ASSIGNMENT), TBL BW (DROP LENGTHS) AND FIG.M2 WHEN ARRANGED FOR A SINGLE FABRIC. SEE TBL AB (PORT ASSIGNMENT), TBL BX (DROP LENGTH) AND FIG. M3 WHEN ARRANGED FOR A DUAL FABRIC. SEE MISC TABLE T
165	5B	1	JL10	1800B	X-DIM	SM / / SMC // MCTU2	128- 156 OR 153-156	332	R	5-0 OR 3-0	SD-5D160-01		CM2 /SIDE 1/	/ /- / /	/ /	L	SEE RMKS	SD-5D140-01			1	199 66	FORM PER ED5D518-30 G 3 SEE TBL AA (PORT ASSIGNMENT), TBL BW (DROP LENGTHS) AND FIG. M2 WHEN ARRANGED FOR A SINGLE FABRIC. SEE TBL AB (PORT ASSIGNMENT), TBL BX3 (DROP LENGTHS) AND FIG. M3 WHEN ARRANGED FOR A DUAL FABRIC. DA SEE MISC TABLE T
166	5B	1	JL12	1800B	X-DIM	SM / / SMC // MCTU2	128- 156 OR 153-156	345	R	5-0 OR 3-0	SD-5D160-01		CM2 /SIDE 1/	/ /- / /	/ /	L	SEE RMKS	SD-5D140-01			1	199 66	FORM PER ED5D518-30 G 4 SEE TBL AA (PORT ASSIGNMENT), TBL BW (DROP LENGTHS) AND FIG.M2 WHEN ARRANGED FOR A SINGLE FABRIC. SEE TBL AB (PORT ASSIGNMENT), TBL BX3 (DROP LENGTH) AND FIG.M3 WHEN ARRANGED FOR A DUAL FABRIC. SEE MISC TABLE T
167	5B	1	JL14	1800B	X-DIM	SM / / SMC // MCTU2	128- 156 OR 153-156	313	R	5-0 OR 3-0	SD-5D160-01		CM2 /SIDE 1/	/ /- / /	/ /	L	SEE RMKS	SD-5D140-01			1	199 66	FORM PER ED5D518-30 G 3 SEE TBL AA (PORT ASSIGNMENT), TBL BW (DROP LENGTHS) AND FIG.M2 WHEN ARRANGED FOR A SINGLE FABRIC. SEE TBL AB (PORT ASSIGNMENT), TBL BX2 (DROP LENGTHS) AND FIG. M3 WHEN ARRANGED FOR A DUAL FABRIC. DA SEE MISC TABLE T
168	5B	1	JL16	1800B	X-DIM	SM / / SMC // MCTU2	128- 156 OR 153-156	300	R	5-0 OR 3-0	SD-5D160-01		CM2 /SIDE 1/	/ /- / /	/ /	L	SEE RMKS	SD-5D140-01			1	199 66	FORM PER ED5D518-30 G 4 SEE TBL AA (PORT ASSIGNMENT), TBL BW (DROP LENGTHS) AND FIG.M2 WHEN ARRANGED FOR A SINGLE FABRIC. SEE TBL AB (PORT ASSIGNMENT), TBL BX2 (DROP LENGTH) AND FIG.M3 WHEN ARRANGED FOR A DUAL FABRIC. SEE MISC TABLE T
197	6	1	JL17	1800B	X-DIM	SM// SMC // MCTU	136- 084	332	L	4-8	SD-5D118-03		LSCIM, LSCIT OR LGX								1	199 66	FORM PER ED5D518-30 G 5 SEE TBL AD2,AE AND FIG.M4 (S FAB), AD2,AE1,AE2 AND FIG.M5 (DUAL FAB). DA SEE MISC TABLE T
198	6	1	JL19	1800B	X-DIM	SM// SMC // MCTU	136- 084	332	L	4-8	SD-5D118-03		LSCIM, LSCIT OR LGX								1	199 66	FORM PER ED5D518-30 G 6 SEE TBL AD2,AE AND FIG.M4 (S FAB), AD2,AE1,AE2 AND FIG.M5 (DUAL FABRIC). DA SEE MISC TABLE T
199	6	1	JL21	1800B	X-DIM	SM// SMC // MCTU	136- 084	300	L	4-8	SD-5D118-03		LSCIM, LSCIT OR LGX								1	199 66	FORM PER ED5D518-30 G 5 SEE TBL AD2,AE AND FIG.M4 FOR SINGLE FAB, SEE TBL AD2,AE1,AE2 & FIG.M5 FOR DUAL FAB. DA SEE MISC TABLE T
200	6	1	JL23	1800B	X-DIM	SM// SMC // MCTU	136- 084	300	L	4-8	SD-5D118-03		LSCIM, LSCIT OR LGX								1	199 66	FORM PER ED5D518-30 G 6 SEE TBL AD2,AE AND FIG.M4 FOR SINGLE FAB, SEE TBL AD2,AE1,AE2 & FIG.M5 FOR DUAL FABRIC. DA SEE MISC TABLE T

COPYRIGHT @ 2001 LUCENT TECHNOLOGIES
ALL RIGHTS RESERVED

BT13

INTERCABINET CABLING
FOR
5ESS * SWITCH
*LUCENT TRADEMARK

DWG SIZE C2 | ISSUE 117

PRINTED IN U.S.A.

CONNECTORIZED CABLING

ITEM	LIST OR GROUP	NBR RECD	CABLE IDENT	CABLE CODE	B DIM	FROM							TO							ROUTE	SHLD	NOTE	REMARKS
						FRAME OR UNIT	EQL	TERM	POS	DROP LGTH	WIRING DIAGRAM	FIGURE	FRAME OR UNIT	EQL	TERM	POS	DROP LGTH	WIRING DIAGRAM	FIGURE				
210	6	1	JL18	1800B	X-DIM	SM// SMC // MCTU	136- 098	332	R	4-9	SD-5D118-03		LSCIM, LSCIT OR LGX								1	199 66	FORM PER ED5D518-30 G 5 SEE TBL AD2,AE AND FIG.M4 (SINGLE FAB) OR AD2,AE1,AE2 & FIG.M5 FOR DUAL FAB. DA SEE MISC TABLE T
220	6	1	JL20	1800B	X-DIM	SM// SMC // MCTU	136- 098	332	R	4-9	SD-5D188-03		LSCIM, LSCIT OR LGX								1	199 66	FORM PER ED5D518-30 G 6 SEE TBL AD2,AE AND FIG.M4 (SINGLE FAB) OR AD2,AE1,AE2 & FIG.M5 FOR DUAL FAB. DA SEE MISC TABLE T
230	6	1	JL22	1800B	X-DIM	SM// SMC // MCTU	136- 098	300	R	4-9	SD-5D118-03		LSCIM, LSCIT OR LGX								1	199 66	FORM PER ED5D518-30 G 5 SEE TBL AD2,AE AND FIG.M4 FOR SINGLE FAB, SEE AD2,AE1,AE2 AND FIG.M5 FOR DUAL FABRIC. DA SEE MISC TABLE T
240	6	1	JL24	1800B	X-DIM	SM// SMC // MCTU	128- 156	300	R	5-0	SD-5D118-03		LSCIM, LSCIT OR LGX								1	199 66	FORM PER ED5D518-30 G 6 SEE TBL AD2,AE AND FIG.M4 FOR SINGLE FAB, SEE AD2,AE1,AE2 AND FIG.M5 FOR DUAL FABRIC. DA SEE MISC TABLE T
241	6B	1	JL17	1800B	X-DIM	SM// SMC // MCTU2	119- 156	332	R	5-9	SD-5D160-01		LSCIM, LSCIT OR LGX								1	199 66	FORM PER ED5D518-30 G 5 SEE TBL AD2,AE AND FIG.M4 (SINGLE FAB), SEE AD2,AE1,AE2 AND FIG.M5 FOR (DUAL FAB). DA SEE MISC TABLE T
242	6B	1	JL19	1800B	X-DIM	SM// SMC // MCTU2	119- 156	332	R	5-9	SD-5D160-01		LSCIM, LSCIT OR LGX								1	199 66	FORM PER ED5D518-30 G 6 SEE TBL AD2,AE AND FIG.M4 (SINGLE FAB), SEE AD2,AE1,AE2 AND FIG.M5 FOR (DUAL FAB). DA SEE MISC TABLE T
243	6B	1	JL21	1800B	X-DIM	SM// SMC // MCTU2	119- 156	300	R	5-9	SD-5D160-01		LSCIM, LSCIT OR LGX								1	199 66	FORM PER ED5D518-30 G 5 SEE TBL AD2,AE AND FIG.M4 FOR SINGLE FAB, SEE TBL AD2,AE1,AE2 & FIG.M5 FOR DUAL FAB. DA SEE MISC TABLE T
244	6B	1	JL23	1800B	X-DIM	SM// SMC // MCTU2	119- 156	300	R	5-9	SD-5D160-01		LSCIM, LSCIT OR LGX								1	199 66	FORM PER ED5D518-30 G 6 SEE TBL AD2,AE AND FIG.M4 FOR SINGLE FAB, SEE TBL AD2,AE1,AE2 & FIG.M5 FOR DUAL FAB. DA SEE MISC TABLE T
245	6B	1	JL18	1800B	X-DIM	SM// SMC // MCTU2	128- 156	332	R	5-0	SD-5D160-01		LSCIM, LSCIT OR LGX								1	199 66	FORM PER ED5D518-30 G 5 SEE TBL AD2,AE AND FIG.M4 FOR SINGLE FAB, SEE TBL AD2,AE1,AE2 & FIG.M5 FOR DUAL FAB. DA SEE MISC TABLE T
246	6B	1	JL20	1800B	X-DIM	SM// SMC // MCTU2	128- 156	332	R	5-0	SD-5D160-01		LSCIM, LSCIT OR LGX								1	199 66	FORM PER ED5D518-30 G 6 SEE TBL AD2,AE AND FIG.M4 FOR SINGLE FAB, SEE TBL AD2,AE1,AE2 & FIG.M5 FOR DUAL FAB. DA SEE MISC TABLE T
247	6B	1	JL22	1800B	X-DIM	SM// SMC // MCTU2	128- 156	300	R	5-0	SD-5D160-01		LSCIM, LSCIT OR LGX								1	199 66	FORM PER ED5D518-30 G 5 SEE TBL AD2,AE AND FIG.M4 FOR SINGLE FAB, SEE TBL AD2,AE1,AE2 & FIG.M5 FOR DUAL FABRIC. DA SEE MISC TABLE T
248	6B	1	JL24	1800B	X-DIM	SM// SMC // MCTU2	128- 156	300	R	5-0	SD-5D160-01		LSCIM, LSCIT OR LGX								1	199 66	FORM PER ED5D518-30 G 6 SEE TBL AD2,AE AND FIG.M4 FOR SINGLE FAB, SEE TB AD2,AE1,AE2 & FIG.M5 FOR DUAL FAB. DA SEE MISC TABLE T

COPYRIGHT @ 2001 LUCENT TECHNOLOGIES
ALL RIGHTS RESERVED

BT13

INTERCABINET CABLING
FOR
5ESS * SWITCH
*LUCENT TRADEMARK

DWG SIZE C2 | ISSUE 117

PRINTED IN U.S.A.

CONNECTORIZED CABLING

ITEM	LIST OR GROUP	NBR RECD	CABLE IDENT	CABLE CODE	B DIM	FROM							TO							ROUTE	SHLD	NOTE	REMARKS
						FRAME OR UNIT	EQL	TERM	POS	DROP LGTH	WIRING DIAGRAM	FIGURE	FRAME OR UNIT	EQL	TERM	POS	DROP LGTH	WIRING DIAGRAM	FIGURE				
250	7	1	JL25	1800B	X-DIM	TMS0 OR CM2	//- // //- //	// // 	SEE RMK	SEE RMK	SD-5D147-01		LSCIM, LSCIT, LGX OR LSM NOTE 96								1	199 66	FORM PER ED5D518-30 G 5 SEE TBL CA1 AND BE1 FOR CM1. SEE TBL AE (PORT ASSIGNMENT), TBL BW (DROP LENGTHS) AND FIG.M4 WHEN ARRANGED FOR A SINGLE FABRIC CM2. SEE TBL AE1 & AE2 (PORT ASSIGNMENT), TBL BX (DROP LENGTHS) AND FIG.M5 FOR A DUAL FABRIC CM2. DA SEE MISC TABLE T
260	7	1	JL27	1800B	X-DIM	TMS0 OR CM2	//- // //- //	// // 	SEE RMK	SEE RMK	SD-5D147-01		LSCIM, LSCIT, LGX OR LSM NOTE 96								1	199 66	FORM PER ED5D518-30 G 6 SEE TBL CA1 AND BE1 FOR CM1. SEE TBL AE (PORT ASSIGNMENT), TBL BW (DROP LENGTHS) AND FIG.M4 WHEN ARRANGED FOR A SINGLE FABRIC CM2. SEE TBL AE1 & AE2 (PORT ASSIGNMENT), TBL BX (DROP LENGTHS) AND FIG.M5 WHEN ARRANGED FOR A DUAL FABRIC CM2. DA SEE MISC TABLE T
270	7	1	JL29	1800B	X-DIM	TMS0 OR CM2	//- // //- //	// // 	SEE RMK	SEE RMK	SD-5D147-01		LSCIM, LSCIT, LGX OR LSM NOTE 96								1	199 66	FORM PER ED5D518-30 G 5 SEE TBL CA1 AND BE1 FOR CM1. SEE TBL AE (PORT ASSIGNMENT), TBL BW (DROP LENGTHS) AND FIG.M4 WHEN ARRANGED FOR A SINGLE FABRIC CM2. SEE TBL AE1 & AE2 (PORT ASSIGNMENT), TBL BX (DROP LENGTHS) AND FIG.M5 WHEN ARRANGED FOR A DUAL FABRIC CM2. DA SEE MISC TABLE T
280	7	1	JL31	1800B	X-DIM	TMS0 OR CM2	//- // //- //	// // 	SEE RMK	SEE RMK	SD-5D147-01		LSCIM, LSCIT, LGX OR LSM NOTE 96								1	199 66	FORM PER ED5D518-30 G 6 SEE TBL CA1 AND TBL BE1 FOR CM1. SEE TBL AE (PORT ASSIGNMENT), TBL BW (DROP LENGTHS) AND FIG.M4 WHEN ARRANGED FOR A SINGLE FABRIC CM2. SEE TBL AE1 OR AE2 (PORT ASSIGNMENT), TBL BX (DROP LENGTHS) AND FIG.M5 FOR A DUAL FABRIC CM2. DA SEE MISC TABLE T
290	7	1	JL26	1800B	X-DIM	TMS1 OR CM2	//- // //- //	// // 	SEE RMK	SEE RMK	SD-5D147-01		LSCIM, LSCIT, LGX OR LSM NOTE 96								1	199 66	FORM PER ED5D518-30 G 5 SEE TBL CA1 AND BE2 FOR CM1. SEE TBL AE (PORT ASSINGMENT), TBL BW (DROP LENGTHS) AND FIG.M4 WHEN ARRANGED FOR A SINGLE FABRIC CM2. SEE TBL AE1 OR AE2 (PORT ASSIGNMENT), TBL BX (DROP LENGTHS) AND FIG.M5 WHEN ARRANGED FOR A DUAL FABRIC CM2. DA SEE MISC TABLE T
300	7	1	JL28	1800B	X-DIM	TMS1 OR CM2	//- // //- //	// // 	SEE RMK	SEE RMK	SD-5D147-01		LSCIM, LSCIT, LGX OR LSM NOTE 96								1	199 66	FORM PER ED5D518-30 G 6 SEE TBL CA1 AND TBL BE2 FOR CM1. SEE TBL AE (PORT ASSIGNMENT), TBL BW (DROP LENGTHS) AND FIG.M4 WHEN ARRANGED FOR A SINGLE FABRIC CM2. SEE TBL AE1 OR AE2 (PORT ASSINGMENT), TBL BX (DROP LENGTHS) AND FIG.M5 WHEN ARRANGED FOR A DUAL FABRIC CM2. DA SEE MISC TABLE T
310	7	1	JL30	1800B	X-DIM	TMS1 OR CM2	//- // //- //	// // 	SEE RMK	SEE RMK	SD-5D147-01		LSCIM, LSCIT, LGX OR LSM NOTE 96								1	199 66	FORM PER ED5D518-30 G 5 SEE TBL CA1 AND TBL BE2 FOR CM1. SEE TBL AE (PORT ASSINGMENT), TBL BW (DROP LENGTHS) AND FIG.M4 WHEN ARRANGED FOR A SINGLE FABRIC CM2. SEE TBL AE1 OR AE2 (PORT ASSIGNMENT), TBL BX (DROP LENGTHS) AND FIG.M5 WHEN ARRANGED FOR A DUAL FABRIC CM2. DA SEE MISC TABLE T
320	7	1	JL32	1800B	X-DIM	TMS1 OR CM2	//- // //- //	// // 	SEE RMK	SEE RMK	SD-5D147-01		LSCIM, LSCIT, LGX OR LSM NOTE 96								1	199 66	FORM PER ED5D518-30 G 6 SEE TBL CA1 AND TBL BE2 FOR CM1. SEE TBL AE (PORT ASSIGNMENT), TBL BW (DROP LENGTHS) AND FIG.M4 WHEN ARRANGED FOR A SINGLE FABRIC CM2. SEE TBL AE1 OR AE2 (PORT ASSIGNEMENT), TBL BX (DROP LENGTHS) AND FIG.M5 WHEN ARRANGED FOR A DUAL FABRIC CM2. DA SEE MISC TABLE T
330	8A	1	JL41	1800B	X-DIM	M/ / TRCU OR TRCU2	/ /- 066 OR 022	132	L	SEE TBL BO1	SD-5D086-01		CM2 /SIDE 0/	/ /- / /	/ /	L	SEE RMKS	SD-5D140-01		1	199 66	FORM PER ED5D518-30 G 3 FOR PORT ASGNMT SEE TBL AC (SINGLE FABRIC), OR AD (DUAL FABRIC). FOR DROP DIM SEE TBL BW (SINGLE FABRIC), OR BX-1 (DUAL FABRIC). DA SEE MISC TABLE T

COPYRIGHT @ 2001 LUCENT TECHNOLOGIES
ALL RIGHTS RESERVED

BT13

INTERCABINET CABLING
FOR
5ESS * SWITCH
*LUCENT TRADEMARK

DWG SIZE C2 | ISSUE 117

PRINTED IN U.S.A.

CONNECTORIZED CABLING

ITEM	LIST OR GROUP	NBR RECD	CABLE IDENT	CABLE CODE	B DIM	FROM							TO							ROUTE	SHLD	NOTE	REMARKS
						FRAME OR UNIT	EQL	TERM	POS	DROP LGTH	WIRING DIAGRAM	FIGURE	FRAME OR UNIT	EQL	TERM	POS	DROP LGTH	WIRING DIAGRAM	FIGURE				
340	8A	1	JL43	1800B	X-DIM	M// TRCU OR TRCU2	/ /- 066 OR 022	145	L	SEE TBL B01	SD-5D086-01		CM2 /SIDE 0/	/ /- / /	/ /	L	SEE RMKS	SD-5D140-01			1	199 66	FORM PER ED5D518-30 G 4 FOR PORT ASGNMT SEE TBL AC (SINGLE FABRIC), OR AD (DUAL FABRIC). FOR DROP DIM SEE TBL BW (SINGLE FABRIC), OR BX-1 (DUAL FABRIC). DA SEE MISC TABLE T
350	8A	1	JL45	1800B	X-DIM	M/ / TRCU OR TRCU2	/ /- 082 OR 030	132	L	SEE TBL BO1	SD-5D086-01		CM2 /SIDE 0/	/ /- / /	/ /	L	SEE RMKS	SD-5D140-01			1	199 66	FORM PER ED5D518-30 G 3 FOR PORT ASGNMT SEE TBL AC (SINGLE FABRIC), OR AD (DUAL FABRIC). FOR DROP DIM SEE TBL BW (SINGLE FABRIC), OR BX (DUAL FABRIC). DA SEE MISC TABLE T
360	8A	1	JL47	1800B	X-DIM	M/ / TRCU OR TRCU2	/ /- 082 OR 030	145	L	SEE TBL BO1	SD-5D086-01		CM2 /SIDE 0/	/ /- / /	/ /	L	SEE RMKS	SD-5D140-01			1	199 66	FORM PER ED5D518-30 G 4 FOR PORT ASGNMT SEE TBL AC (SINGLE FABRIC), OR AD (DUAL FABRIC). FOR DROP DIM SEE TBL BW (SINGLE FABRIC) OR BX (DUAL FABRIC). DA SEE MISC TABLE T
370	8A	1	JL42	1800B	X-DIM	M/ / TRCU OR TRCU2	/ /- 114 OR 138	132	R	SEE TBL BO1	SD-5D086-01		CM2 /SIDE 1/	/ /- / /	/ /	L	SEE RMKS	SD-5D140-01			1	199 66	FORM PER ED5D518-30 G 3 FOR PORT ASGNMT SEE TBL AC (SINGLE FABRIC), OR TBL AD (DUAL FABRIC). FOR DROP DIM SEE TBL BW (SINGLE FABRIC), OR BX-3 (DUAL FABRIC). DA SEE MISC TABLE T
380	8A	1	JL44	1800B	X-DIM	M/ / TRCU OR TRCU2	/ /- 114 OR 138	145	R	SEE TBL BO1	SD-5D086-01		CM2 /SIDE 1/	/ /- / /	/ /	L	SEE RMKS	SD-5D140-01			1	199 66	FORM PER ED5D518-30 G 4 FOR PORT ASGNMT SEE TBL AC (SINGLE FABRIC), OR TBL AD (DUAL FABRIC). FOR DROP DIM SEE TBL BW (SINGLE FABRIC), OR BX-3 (DUAL FABRIC). DA SEE MISC TABLE T
390	8A	1	JL46	1800B	X-DIM	M/ / TRCU OR TRCU2	/ /- 130 OR 146	132	R	SEE TBL BO1	SD-5D086-01		CM2 /SIDE 1/	/ /- / /	/ /	L	SEE RMKS	SD-5D140-01			1	199 66	FORM PER ED5D518-30 G 3 FOR PORT ASGNMT SEE TBL AC (SINGLE FABRIC), OR TBL AD (DUAL FABRIC). FOR DROP DIM SEE TBL BW (SINGLE FABRIC), OR BX-2 (DUAL FABRIC). DA SEE MISC TABLE T
400	8A	1	JL48	1800B	X-DIM	M/ / TRCU OR TRCU2	/ /- 130 OR 146	145	R	SEE TBL BO1	SD-5D086-01		CM2 /SIDE 1/	/ /- / /	/ /	L	SEE RMKS	SD-5D140-01			1	199 66	FORM PER ED5D518-30 G 4 FOR PORT ASGNMT SEE TBL AC (SINGLE FABRIC), OR TBL AD (DUAL FABRIC). FOR DROP DIM SEE TBL BW (SINGLE FABRIC), OR BX-2 (DUAL FABRIC). SEE MISC TABLE T
410	8B	1	JL101	105435291	X-DIM	M// TRCU2	SEE TBL E3	SEE TBL E3	L	SEE TBL BO2	SD5D086-02		TMSO	/ /- / /	/ /		SEE TBL BD	SD5D147-01			1	66 84	FORM PER ED5D518-30 G 17 XMT SEE TBL E3
411	8B	1	JL103	105435309	X-DIM	M// TRCU2	SEE TBL E3	SEE TBL E3	L	SEE TBL BO2	SD5D086-02		TMSO	/ /- / /	/ /		SEE TBL BD	SD5D147-01			1	66 84	FORM PER ED5D518-30 G 18 REC SEE TBL E3
412	8B	1	JL105	105435291	X-DIM	M// TRCU2	SEE TBL E3	SEE TBL E3	L	SEE TBL BO2	SD5D086-02		TMSO	/ /- / /	/ /		SEE TBL BD	SD5D147-01			1	66 84	FORM PER ED5D518-30 G 17 XMT SEE TBL E3
413	8B	1	JL107	105435309	X-DIM	M// TRCU2	SEE TBL E3	SEE TBL E3	L	SEE TBL BO2	SD5D086-02		TMSO	/ /- / /	/ /		SEE TBL BD	SD5D147-01			1	66 84	FORM PER ED5D518-30 G 18 REC SEE TBL E3

COPYRIGHT @ 2001 LUCENT TECHNOLOGIES
ALL RIGHTS RESERVED

BT13

INTERCABINET CABLING
FOR
5ESS * SWITCH
*LUCENT TRADEMARK

DWG SIZE C2 | ISSUE 117

LUCENT TECHNOLOGIES INC | ED5D500-21 | SHEET A44 OF 292

PRINTED IN U.S.A.

CONNECTORIZED CABLING

ITEM	LIST OR GROUP	NBR RECD	CABLE IDENT	CABLE CODE	B DIM	FROM							TO							ROUTE	SHLD	NOTE	REMARKS
						FRAME OR UNIT	EQL	TERM	POS	DROP LGTH	WIRING DIAGRAM	FIGURE	FRAME OR UNIT	EQL	TERM	POS	DROP LGTH	WIRING DIAGRAM	FIGURE				
414	8B	1	JL102	105435291	X-DIM	M// TRCU2	SEE TBL E3	SEE TBL E3	R	SEE TBL BO2	SD5D086-02		TMS1	/ /- / /	/ /		SEE TBL BE	SD5D147-01			1	66 84	FORM PER ED5D518-30 G 17 XMT SEE TBL E3
415	8B	1	JL104	105435309	X-DIM	M// TRCU2	SEE TBL E3	SEE TBL E3	R	SEE TBL BO2	SD5D086-02		TMS1	/ /- / /	/ /		SEE TBL BE	SD5D147-01			1	66 84	FORM PER ED5D518-30 G 18 REC SEE TBL E3
416	8B	1	JL106	105435291	X-DIM	M// TRCU2	SEE TBL E3	SEE TBL E3	R	SEE TBL BO2	SD5D086-02		TMS1	/ /- / /	/ /		SEE TBL BE	SD5D147-01			1	66 84	FORM PER ED5D518-30 G 17 XMT SEE TBL E3
417	8B	1	JL108	105435309	X-DIM	M// TRCU2	SEE TBL E3	SEE TBL E3	R	SEE TBL BO2	SD5D086-02		TMS1	/ /- / /	/ /		SEE TBL BE	SD5D147-01			1	66 84	FORM PER ED5D518-30 G 18 REC SEE TBL E3
420	8C	1	JL101	105435291	X-DIM	M// TRCU2	SEE TBL H4 H5 H6	SEE TBL H4 H5 H6	L	SEE TBL BO2	SD5D086-02		CM2 '0'	/ /- / /	/ /	L	SEE TBL BW OR BX()	SD5D140-01			1	66 84	FORM PER ED5D518-30 G 17 XMT SEE TBL H4 (SINGLE FAB) H5 (DUAL FAB ODD SM) H6 (DUAL FAB EVEN SM) FOR PORT ASGNT
421	8C	1	JL103	105435309	X-DIM	M// TRCU2	SEE TBL H4 H5 H6	SEE TBL H4 H5 H6	L	SEE TBL BO2	SD5D086-02		CM2 '0'	/ /- / /	/ /	L	SEE TBL BW OR BX()	SD5D140-01			1	66 84	FORM PER ED5D518-30 G 18 REC SEE TBL H4 (SINGLE FAB) H5 (DUAL FAB ODD SM) H6 (DUAL FAB EVEN SM) FOR PORT ASGNT
422	8C	1	JL105	105435291	X-DIM	M// TRCU2	SEE TBL H4 H5 H6	SEE TBL H4 H5 H6	L	SEE TBL BO2	SD5D086-02		CM2 '0'	/ /- / /	/ /	L	SEE TBL BW OR BX()	SD5D140-01			1	66 84	FORM PER ED5D518-30 G 17 XMT SEE TBL H4 (SINGLE FAB) H5 (DUAL FAB ODD SM) H6 (DUAL FAB EVEN SM) FOR PORT ASGNT
423	8C	1	JL107	105435309	X-DIM	M// TRCU2	SEE TBL H4 H5 H6	SEE TBL H4 H5 H6	L	SEE TBL BO2	SD5D086-02		CM2 '0'	/ /- / /	/ /	L	SEE TBL BW OR BX()	SD5D140-01			1	66 84	FORM PER ED5D518-30 G 18 REC SEE TBL H4 (SINGLE FAB) H5 (DUAL FAB ODD SM) H6 (DUAL FAB EVEN SM) FOR PORT ASGNT
424	8C	1	JL102	105435291	X-DIM	M// TRCU2	SEE TBL H4 H5 H6	SEE TBL H4 H5 H6	R	SEE TBL BO2	SD5D086-02		CM2 '1'	/ /- / /	/ /	L	SEE TBL BW OR BX()	SD5D140-01			1	66 84	FORM PER ED5D518-30 G 17 XMT SEE TBL H4 (SINGLE FAB) H5 (DUAL FAB ODD SM) H6 (DUAL FAB EVEN SM) FOR PORT ASGNT
425	8C	1	JL104	105435309	X-DIM	M// TRCU2	SEE TBL H4 H5 H6	SEE TBL H4 H5 H6	R	SEE TBL BO2	SD5D086-02		CM2 '1'	/ /- / /	/ /	L	SEE TBL BW OR BX()	SD5D140-01			1	66 84	FORM PER ED5D518-30 G 18 REC SEE TBL H4 (SINGLE FAB) H5 (DUAL FAB ODD SM) H6 (DUAL FAB EVEN SM) FOR PORT ASGNT
426	8C	1	JL106	105435291	X-DIM	M// TRCU2	SEE TBL H4 H5 H6	SEE TBL H4 H5 H6	R	SEE TBL BO2	SD5D086-02		CM2 '1'	/ /- / /	/ /	L	SEE TBL BW OR BX()	SD5D140-01			1	66 84	FORM PER ED5D518-30 G 17 XMT SEE TBL H4 (SINGLE FAB) H5 (DUAL FAB ODD SM) H6 (DUAL FAB EVEN SM) FOR PORT ASGNT
427	8C	1	JL108	105435309	X-DIM	M// TRCU2	SEE TBL H4 H5 H6	SEE TBL H4 H5 H6	R	SEE TBL BO2	SD5D086-02		CM2 '1'	/ /- / /	/ /	L	SEE TBL BW OR BX()	SD5D140-01			1	66 84	FORM PER ED5D518-30 G 18 REC SEE TBL H4 (SINGLE FAB) H5 (DUAL FAB ODD SM) H6 (DUAL FAB EVEN SM) FOR PORT ASGNT

COPYRIGHT @ 2001 LUCENT TECHNOLOGIES
ALL RIGHTS RESERVED

BT13

INTERCABINET CABLING
FOR
5ESS * SWITCH
*LUCENT TRADEMARK

DWG SIZE C2 | ISSUE 117

LUCENT TECHNOLOGIES INC | ED5D500-21 | SHEET A45 OF 292

PRINTED IN U.S.A.

CONNECTORIZED CABLING

ITEM	LIST OR GROUP	NBR RECD	CABLE IDENT	CABLE CODE	B DIM	FROM							TO							ROUTE	SHLD	NOTE	REMARKS
						FRAME OR UNIT	EQL	TERM	POS	DROP LGTH	WIRING DIAGRAM	FIGURE	FRAME OR UNIT	EQL	TERM	POS	DROP LGTH	WIRING DIAGRAM	FIGURE				
430	8D	1	JL101	105435291	X-DIM	M// TRCU1	SEE TBL E2	SEE TBL E2	L	SEE TBL BO1	SD5D086-01		TMS0	/ /- / /	/ /		SEE TBL BD	SD5D147-01			1	66 84	FORM PER ED5D518-30 G 17 XMT SEE TBL E2
431	8D	1	JL103	105435309	X-DIM	M// TRCU1	SEE TBL E2	SEE TBL E2	L	SEE TBL BO1	SD5D086-01		TMS0	/ /- / /	/ /		SEE TBL BD	SD5D147-01			1	66 84	FORM PER ED5D518-30 G 18 REC SEE TBL E2
432	8D	1	JL105	105435291	X-DIM	M// TRCU1	SEE TBL E2	SEE TBL E2	L	SEE TBL BO1	SD5D086-01		TMS0	/ /- / /	/ /		SEE TBL BD	SD5D147-01			1	66 84	FORM PER ED5D518-30 G 17 XMT SEE TBL E2
433	8D	1	JL107	105435309	X-DIM	M// TRCU1	SEE TBL E2	SEE TBL E2	L	SEE TBL BO1	SD5D086-01		TMS0	/ /- / /	/ /		SEE TBL BD	SD5D147-01			1	66 84	FORM PER ED5D518-30 G 18 REC SEE TBL E2
434	8D	1	JL102	105435291	X-DIM	M// TRCU	SEE TBL E2	SEE TBL E2	R	SEE TBL BO1	SD5D086-01		TMS1	/ /- / /	/ /		SEE TBL BE	SD5D147-01			1	66 84	FORM PER ED5D518-30 G 17 XMT SEE TBL E2
435	8D	1	JL104	105435309	X-DIM	M// TRCU	SEE TBL E2	SEE TBL E2	R	SEE TBL BO1	SD5D086-01		TMS1	/ /- / /	/ /		SEE TBL BE	SD5D147-01			1	66 84	FORM PER ED5D518-30 G 18 REC SEE TBL E2
436	8D	1	JL106	105435291	X-DIM	M// TRCU	SEE TBL E2	SEE TBL E2	R	SEE TBL BO1	SD5D086-01		TMS1	/ /- / /	/ /		SEE TBL BE	SD5D147-01			1	66 84	FORM PER ED5D518-30 G 17 XMT SEE TBL E2
437	8D	1	JL108	105435309	X-DIM	M// TRCU	SEE TBL E2	SEE TBL E2	R	SEE TBL BO1	SD5D086-01		TMS1	/ /- / /	/ /		SEE TBL BE	SD5D147-01			1	66 84	FORM PER ED5D518-30 G 18 REC SEE TBL E2
440	8E	1	JL101	105435291	X-DIM	M// TRCU	SEE TBL H1 H2 H3	SEE TBL H1 H2 H3	L	SEE TBL BO1	SD5D086-01		CM2 '0'	/ /- / /	/ /	L	SEE TBL BW OR BX()	SD5D140-01			1	66 84	FORM PER ED5D518-30 G 17 XMT SEE TBL H1 (SINGLE FAB) H2 (DUAL FAB ODD SM) H3 (DUAL FAB EVEN SM) FOR PORT ASGNT
441	8E	1	JL103	105435309	X-DIM	M// TRCU	SEE TBL H1 H2 H3	SEE TBL H1 H2 H3	L	SEE TBL BO1	SD5D086-01		CM2 '0'	/ /- / /	/ /	L	SEE TBL BW OR BX()	SD5D140-01			1	66 84	FORM PER ED5D518-30 G 18 REC SEE TBL H1 (SINGLE FAB) H2 (DUAL FAB ODD SM) H3 (DUAL FAB EVEN SM) FOR PORT ASGNT
442	8E	1	JL105	105435291	X-DIM	M// TRCU	SEE TBL H1 H2 H3	SEE TBL H1 H2 H3	L	SEE TBL BO1	SD5D086-01		CM2 '0'	/ /- / /	/ /	L	SEE TBL BW OR BX()	SD5D140-01			1	66 84	FORM PER ED5D518-30 G 17 XMT SEE TBL H1 (SINGLE FAB) H2 (DUAL FAB ODD SM) H3 (DUAL FAB EVEN SM) FOR PORT ASGNT
443	8E	1	JL107	105435309	X-DIM	M// TRCU	SEE TBL H1 H2 H3	SEE TBL H1 H2 H3	L	SEE TBL BO1	SD5D086-01		CM2 '0'	/ /- / /	/ /	L	SEE TBL BW OR BX()	SD5D140-01			1	66 84	FORM PER ED5D518-30 G 18 REC SEE TBL H1 (SINGLE FAB) H2 (DUAL FAB ODD SM) H3 (DUAL FAB EVEN SM) FOR PORT ASGNT
444	8E	1	JL102	105435291	X-DIM	M// TRCU	SEE TBL H1 H2 H3	SEE TBL H1 H2 H3	R	SEE TBL BO1	SD5D086-01		CM2 '1'	/ /- / /	/ /	L	SEE TBL BW OR BX()	SD5D140-01			1	66 84	FORM PER ED5D518-30 G 17 XMT SEE TBL H1 (SINGLE FAB) H2 (DUAL FAB ODD SM) H3 (DUAL FAB EVEN SM) FOR PORT ASGNT

COPYRIGHT @ 2001 LUCENT TECHNOLOGIES
ALL RIGHTS RESERVED

BT13

INTERCABINET CABLING
FOR
5ESS * SWITCH
*LUCENT TRADEMARK

DWG SIZE C2 | ISSUE 117

LUCENT TECHNOLOGIES INC | ED5D500-21 | SHEET A46 OF 292

PRINTED IN U.S.A.

CONNECTORIZED CABLING

ITEM	LIST OR GROUP	NBR RECD	CABLE IDENT	CABLE CODE	B DIM	FROM							TO							ROUTE	SHLD	NOTE	REMARKS
						FRAME OR UNIT	EQL	TERM	POS	DROP LGTH	WIRING DIAGRAM	FIGURE	FRAME OR UNIT	EQL	TERM	POS	DROP LGTH	WIRING DIAGRAM	FIGURE				
445	8E	1	JL104	105435309	X-DIM	M// TRCU	SEE TBL H1 H2 H3	SEE TBL H1 H2 H3	R	SEE TBL BO1	SD5D086-01		CM2 '1'	/ /- / /	/ /	L	SEE TBL BW OR BX()	SD5D140-01			1	66 84	FORM PER ED5D518-30 G 18 REC SEE TBL H1 (SINGLE FAB) H2 (DUAL FAB ODD SM) H3 (DUAL FAB EVEN SM) FOR PORT ASGNT
446	8E	1	JL106	1054135291	X-DIM	M// TRCU	SEE TBL H1 H2 H3	SEE TBL H1 H2 H3	R	SEE TBL BO1	SD5D086-01		CM2 '1'	/ /- / /	/ /	L	SEE TBL BW OR BX()	SD5D140-01			1	66 84	FORM PER ED5D518-30 G 17 XMT SEE TBL H1 (SINGLE FAB) H2 (DUAL FAB ODD SM) H3 (DUAL FAB EVEN SM) FOR PORT ASGNT
447	8E	1	JL108	105435309	X-DIM	M// TRCU	SEE TBL H1 H2 H3	SEE TBL H1 H2 H3	R	SEE TBL BO1	SD5D086-01		CM2 '1'	/ /- / /	/ /	L	SEE TBL BW OR BX()	SD5D140-01			1	66 84	FORM PER ED5D518-30 G 18 REC SEE TBL H1 (SINGLE FAB) H2 (DUAL FAB ODD SM) H3 (DUAL FAB EVEN SM) FOR PORT ASGNT
450	9A	1	JL49	1800B	X-DIM	M/ / TRCU OR TRCU2	/ /- 026 OR 038	132	L	SEE TBL BO1	SD-5D086-01		CM2 /SIDE 0/	/ /- / /	/ /	L	SEE RMKS	SD-5D140-01			1	199 66	FORM PER ED5D518-30 G 3 FOR PORT ASGNMT SEE TBL AC (SINGLE FABRIC), OR AD-1 (DUAL FABRIC). FOR DROP DIM SEE TBL BW (SINGLE FABRIC), OR BX-3 (DUAL FABRIC). DA SEE MISC TABLE T
451	9A	1	JL51	1800B	X-DIM	M/ / TRCU OR TRCU2	/ /- 026 OR 038	145	L	SEE TBL BO1	SD-5D086-01		CM2 /SIDE 0/	/ /- / /	/ /	L	SEE RMKS	SD-5D140-01			1	199 66	FORM PER ED5D518-30 G 4 FOR PORT ASGNMT SEE TBL AC (SINGLE FABRIC), OR AD-1 (DUAL FABRIC). FOR DROP DIM SEE TBL BW (SINGLE FABRIC), OR BX-1 (DUAL FABRIC). SEE MISC TABLE T
452	9A	1	JL53	1800B	X-DIM	M/ / TRCU OR TRCU2	/ /- 042 OR 046	132	L	SEE TBL BO1	SD-5D086-01		CM2 /SIDE 0/	/ /- / /	/ /	L	SEE RMKS	SD-5D140-01			1	199 66	FORM PER ED5D518-30 G 3 FOR PORT ASGNMT SEE TBL AC (SINGLE FABRIC), OR AD-1 (DUAL FABRIC). FOR DROP DIM SEE TBL BW (SINGLE FABRIC), OR BX (DUAL FABRIC). SEE MISC TABLE T
453	9A	1	JL55	1800B	X-DIM	M// TRCU OR TRCU2	/ /- 042 OR 046	145	L	SEE TBL B01	SD5D086-01		CM2 /SIDE 0/	/ /- / /	/ /	L	SEE RMKS	SD-5D140-01			1	199 66	FORM PER ED5D518-30 G 4 FOR PORT ASGNMT SEE TBL AC (SINGLE FABRIC), OR AD-1 (DUAL FABRIC). FOR DROP DIM SEE TBL BW (SINGLE FABRIC), OR BX (DUAL FABRIC). SEE MISC TABLE T
454	9A	1	JL50	1800B	X-DIM	M/ / TRCU OR TRCU2	/ /- 154	132	R	SEE TBL BO1	SD-5D086-01		CM2 /SIDE 1/	/ /- / /	/ /	L	SEE RMKS	SD-5D140-01			1	199 66	FORM PER ED5D518-30 G 3 FOR PORT ASGNMT SEE TBL AC (SINGLE FABRIC), OR AD-1 (DUAL FABRIC). FOR DROP DIM SEE TBL BW (SINGLE FABRIC), OR BX-3 (DUAL FABRIC). DA SEE MISC TABLE T
460	9A	1	JL52	1800B	X-DIM	M/ / TRCU OR TRCU2	/ /- 154	145	R	SEE TBL BO1	SD-5D086-01		CM2 /SIDE 1/	/ /- / /	/ /	L	SEE RMKS	SD-5D140-01			1	199 66	FORM PER ED5D518-30 G 4 FOR PORT ASGNMT SEE TBL AC (SINGLE FABRIC), OR AD-1 (DUAL FABRIC). FOR DROP DIM SEE TBL BW (SINGLE FABRIC), OR BX-3 (DUAL FABRIC). SEE MISC TABLE T
470	9A	1	JL54	1800B	X-DIM	M/ / TRCU OR TRCU2	/ /- 170 OR 162	132	R	SEE TBL BO1	SD-5D086-01		CM2 /SIDE 1/	/ /- / /	/ /	L	SEE RMKS	SD-5D140-01			1	199 66	FORM PER ED5D518-30 G 3 FOR PORT ASGNMT SEE TBL AC (SINGLE FABRIC), OR AD-1 (DUAL FABRIC). FOR DROP DIM SEE TBL BW (SINGLE FABRIC), OR BX-2 (DUAL FABRIC). DA SEE MISC TABLE T

COPYRIGHT @ 2001 LUCENT TECHNOLOGIES
ALL RIGHTS RESERVED

BT13

INTERCABINET CABLING
FOR
5ESS * SWITCH
*LUCENT TRADEMARK

DWG SIZE C2 | ISSUE 117

PRINTED IN U.S.A.

CONNECTORIZED CABLING

ITEM	LIST OR GROUP	NBR RECD	CABLE IDENT	CABLE CODE	B DIM	FROM							TO							ROUTE	SHLD	NOTE	REMARKS
						FRAME OR UNIT	EQL	TERM	POS	DROP LGTH	WIRING DIAGRAM	FIGURE	FRAME OR UNIT	EQL	TERM	POS	DROP LGTH	WIRING DIAGRAM	FIGURE				
480	9A	1	JL56	1800B	X-DIM	M/ / TRCU OR TRCU2	/ /- 170 OR 162	145	R	SEE TBL BO1	SD-5D086-01		CM2 /SIDE 1/	/ /- / /	/ /	L	SEE RMKS	SD-5D140-01			1	199 66	FORM PER ED5D518-30 G 4 FOR PORT ASGNMT SEE TBL AC (SINGLE FABRIC), OR AD-1 (DUAL FABRIC). FOR DROP DIM SEE TBL BW (SINGLE FABRIC), OR BX-2 (DUAL FABRIC). SEE MISC TABLE T
491	10	1	JL101	105435291	X-DIM	SM// SMC // MCTU	136- 084	332	L	5-0	SD5D118-02		CM2 '0'	/ /- / /	/ /	L	SEE TBL BW OR BX()	SD5D140-01			1	66 84	FORM PER ED5D518-30 G 17 XMT SEE TBL F1 (SINGLE FAB) F2 (DUAL FAB ODD SM) F3 (DUAL FAB EVEN SM) FOR PORT ASGNT.
492	10	1	JL103	105435309	X-DIM	SM// SMC // MCTU	136- 084	332	L	5-0	SD5D118-02		CM2 '0'	/ /- / /	/ /	L	SEE TBL BW OR BX()	SD5D140-01			1	66 84	FORM PER ED5D518-30 G 18 REC SEE TBL F1 (SINGLE FAB) F2 (DUAL FAB ODD SM) F3 (DUAL FAB EVEN SM) FOR PORT ASGNT.
493	10	1	JL105	105435291	X-DIM	SM// SMC // MCTU	136- 084	300	L	5-0	SD5D118-02		CM2 '0'	/ /- / /	/ /	L	SEE TBL BW OR BX()	SD5D140-01			1	66 84	FORM PER ED5D518-30 G 17 XMT SEE TBL F1 (SINGLE FAB) F2 (DUAL FAB ODD SM) F3 (DUAL FAB EVEN SM) FOR PORT ASGNT.
494	10	1	JL107	105435309	X-DIM	SM// SMC // MCTU	136- 084	300	L	5-0	SD5D118-02		CM2 '0'	/ /- / /	/ /	L	SEE TBL BW OR BX()	SD5D140-01			1	66 84	FORM PER ED5D518-30 G 18 REC SEE TBL F1 (SINGLE FAB) F2 (DUAL FAB ODD SM) F3 (DUAL FAB EVEN SM) FOR PORT ASGNT.
495	10	1	JL102	105435291	X-DIM	SM// SMC // MCTU	136- 098	332	R	5-0	SD5D118-02		CM2 '1'	/ /- / /	/ /	L	SEE TBL BW OR BX()	SD5D140-01			1	66 84	FORM PER ED5D518-30 G 17 XMT SEE TBL F1 (SINGLE FAB) F2 (DUAL FAB ODD SM) F3 (DUAL FAB EVEN SM) FOR PORT ASGNT.
496	10	1	JL104	105435309	X-DIM	SM// SMC // MCTU	136- 098	332	R	5-0	SD5D118-02		CM2 '1'	/ /- / /	/ /	L	SEE TBL BW OR BX()	SD5D140-01			1	66 84	FORM PER ED5D518-30 G 18 REC SEE TBL F1 (SINGLE FAB) F2 (DUAL FAB ODD SM) F3 (DUAL FAB EVEN SM) FOR PORT ASGNT.
497	10	1	JL106	105435291	X-DIM	SM// SMC // MCTU	136- 098	300	R	5-0	SD5D118-02		CM2 '1'	/ /- / /	/ /	L	SEE TBL BW OR BX()	SD5D140-01			1	66 84	FORM PER ED5D518-30 G 17 XMT SEE TBL F1 (SINGLE FAB) F2 (DUAL FAB ODD SM) F3 (DUAL FAB EVEN SM) FOR PORT ASGNT.
498	10	1	JL108	105435309	X-DIM	SM// SMC // MCTU	136- 098	300	R	5-0	SD5D118-02		CM2 '1'	/ /- / /	/ /	L	SEE TBL BW OR BX()	SD5D140-01			1	66 84	FORM PER ED5D518-30 G 18 REC SEE TBL F1 (SINGLE FAB) F2 (DUAL FAB ODD SM) F3 (DUAL FAB EVEN SM) FOR PORT ASGNT.
501	10A	1	JL101	105435291	X-DIM	SM// SMC // MCTU2	119- 156 OR 145-156	332	R	5-9 OR 3-8	SD5D160-01		CM2 '0'	/ /- / /	/ /	L	SEE TBL BW OR BX()	SD5D140-01			1	66 84	FORM PER ED5D518-30 G 17 XMT SEE TBL F1 (SINGLE FAB) F2 (DUAL FAB ODD SM) F3 (DUAL FAB EVEN SM) FOR PORT ASGNT.
502	10A	1	JL103	105435309	X-DIM	SM// SMC // MCTU2	119- 156 OR 145-156	332	R	5-9 OR 3-8	SD5D160-01		CM2 '0'	/ /- / /	/ /	L	SEE TBL BW OR BX()	SD5D140-01			1	66 84	FORM PER ED5D518-30 G 18 REC SEE TBL F1 (SINGLE FAB) F2 (DUAL FAB ODD SM) F3 (DUAL FAB EVEN SM) FOR PORT ASGNT.

COPYRIGHT @ 2001 LUCENT TECHNOLOGIES
ALL RIGHTS RESERVED

BT13

INTERCABINET CABLING
FOR
5ESS * SWITCH
*LUCENT TRADEMARK

DWG SIZE C2 | ISSUE 117

LUCENT TECHNOLOGIES INC | ED5D500-21 | SHEET A48 OF 292

PRINTED IN U.S.A.

CONNECTORIZED CABLING

ITEM	LIST OR GROUP	NBR RECD	CABLE IDENT	CABLE CODE	B DIM	FROM							TO							ROUTE	SHLD	NOTE	REMARKS
						FRAME OR UNIT	EQL	TERM	POS	DROP LGTH	WIRING DIAGRAM	FIGURE	FRAME OR UNIT	EQL	TERM	POS	DROP LGTH	WIRING DIAGRAM	FIGURE				
503	10A	1	JL105	105435291	X-DIM	SM// SMC // MCTU2	119- 156 OR 145-156	300	R	5-9 OR 3-8	SD5D160-01		CM2 '0'	/ /- / /	/ /	L	SEE TBL BW OR BX()	SD5D140-01			1	66 84	FORM PER ED5D518-30 G 17 XMT SEE TBL F1 (SINGLE FAB) F2 (DUAL FAB ODD SM) F3 (DUAL FAB EVEN SM) FOR PORT ASGNT.
504	10A	1	JL107	105435309	X-DIM	SM// SMC // MCTU2	119- 156 OR 145-156	300	R	5-9 OR 3-8	SD5D160-01		CM2 '0'	/ /- / /	/ /	L	SEE TBL BW OR BX()	SD5D140-01			1	66 84	FORM PER ED5D518-30 G 18 REC SEE TBL F1 (SINGLE FAB) F2 (DUAL FAB ODD SM) F3 (DUAL FAB EVEN SM) FOR PORT ASGNT.
505	10A	1	JL102	105435291	X-DIM	SM// SMC // MCTU2	128- 156 OR 153-156	332	R	5-1 OR 3-0	SD5D160-01		CM2 '1'	/ /- / /	/ /	L	SEE TBL BW OR BX()	SD5D140-01			1	66 84	FORM PER ED5D518-30 G 17 XMT SEE TBL F1 (SINGLE FAB) F2 (DUAL FAB ODD SM) F3 (DUAL FAB EVEN SM) FOR PORT ASGNT.
506	10A	1	JL104	105435309	X-DIM	SM// SMC // MCTU2	128- 156 OR 153-156	332	R	5-1 OR 3-0	SD5D160-01		CM2 '1'	/ /- / /	/ /	L	SEE TBL BW OR BX()	SD5D140-01			1	66 84	FORM PER ED5D518-30 G 18 REC SEE TBL F1 (SINGLE FAB) F2 (DUAL FAB ODD SM) F3 (DUAL FAB EVEN SM) FOR PORT ASGNT.
507	10A	1	JL106	105435291	X-DIM	SM// SMC // MCTU2	128- 156 OR 153-156	300	R	5-1 OR 3-0	SD5D160-01		CM2 '1'	/ /- / /	/ /	L	SEE TBL BW OR BX()	SD5D140-01			1	66 84	FORM PER ED5D518-30 G 17 XMT SEE TBL F1 (SINGLE FAB) F2 (DUAL FAB ODD SM) F3 (DUAL FAB EVEN SM) FOR PORT ASGNT.
508	10A	1	JL108	105435309	X-DIM	SM// SMC // MCTU2	128- 156 OR 153-156	300	R	5-1 OR 3-0	SD5D160-01		CM2 '1'	/ /- / /	/ /	L	SEE TBL BW OR BX()	SD5D140-01			1	66 84	FORM PER ED5D518-30 G 18 REC SEE TBL F1 (SINGLE FAB) F2 (DUAL FAB ODD SM) F3 (DUAL FAB EVEN SM) FOR PORT ASGNT.
512	12	1	JL101	105435291	X-DIM	SM// SMC1 MCTU	136- 084	332	L	5-0	SD5D118-02		TMS0	/ /- / /	/ /		SEE TBL BD	SD5D147-01			1	66 84	FORM PER ED5D518-30 G 19 XMT SEE TBL E1
514	12	1	JL103	105435309	X-DIM	SM// SMC1 MCTU	136- 084	332	L	5-0	SD5D118-02		TMS0	/ /- / /	/ /		SEE TBL BD	SD5D147-01			1	66 84	FORM PER ED5D518-30 G 20 REC SEE TBL E1
516	12	1	JL105	105435291	X-DIM	SM// SMC1 MCTU	136- 084	300	L	5-0	SD5D118-02		TMS0	/ /- / /	/ /		SEE TBL BD	SD5D147-01			1	66 84	FORM PER ED5D518-30 G 19 SMT SEE TBL E1
518	12	1	JL107	105435309	X-DIM	SM// SMC1 MCTU	136- 084	300	L	5-0	SD5D118-02		TMS0	/ /- / /	/ /		SEE TBL BD	SD5D147-01			1	66 84	FORM PER ED5D518-30 G 20 REC SEE TBL E1
520	12	1	JL102	105435291	X-DIM	SM// SMC1 MSTU	136- 098	332	R	5-0	SD5D118-02		TMS1	/ /- / /	/ /		SEE TBL BE	SD5D147-01			1	66 84	FORM PER ED5D518-30 G 19 SMT SEE TBL E1
522	12	1	JL104	105435309	X-DIM	SM// SMC1 MCTU	136- 098	332	R	5-0	SD5D118-02		TMS1	/ /- / /	/ /		SEE TBL BE	SD5D147-01			1	66 84	FORM PER ED5D518-30 G 20 REC SEE TBL E1
524	12	1	JL106	105435291	X-DIM	SM// SMC1 MCTU	136- 098	300	R	5-0	SD5D118-02		TMS1	/ /- / /	/ /		SEE TBL BE	SD5D147-01			1	66 84	FORM PER ED5D518-30 G 19 SMT SEE TBL E1

COPYRIGHT @ 2001 LUCENT TECHNOLOGIES
ALL RIGHTS RESERVED

BT13

INTERCABINET CABLING
FOR
5ESS * SWITCH
*LUCENT TRADEMARK

DWG SIZE C2 | ISSUE 117

PRINTED IN U.S.A.

CONNECTORIZED CABLING

ITEM	LIST OR GROUP	NBR RECD	CABLE IDENT	CABLE CODE	B DIM	FROM							TO							ROUTE	SHLD	NOTE	REMARKS
						FRAME OR UNIT	EQL	TERM	POS	DROP LGTH	WIRING DIAGRAM	FIGURE	FRAME OR UNIT	EQL	TERM	POS	DROP LGTH	WIRING DIAGRAM	FIGURE				
526	12	1	JL108	105435309	X-DIM	SM// SMC1 MCTU	136- 098	300	R	5-0	SD5D118-02		TMS1	/ /- / /	/ /		SEE TBL BE	SD5D147-01			1	66 84	FORM PER ED5D518-30 G 20 REC SEE TBL E1
528	12A	1	JL101	105435291	X-DIM	SM// SMC1 MCTU2	119- 156 OR 145- 156	332	R	5-9 OR 3-8	SD5D160-01		TMS0	/ /- / /	/ /		SEE TBL BD	SD5D147-01			1	66 84	FORM PER ED5D518-30 G 19 SMT SEE TBL E1
530	12A	1	JL103	105435309	X-DIM	SM// SMC1 MCTU2	119- 156 OR 145- 156	332	R	5-9 OR 3-8	SD5D160-01		TMS0	/ /- / /	/ /		SEE TBL BD	SD5D147-01			1	66 84	FORM PER ED5D518-30 G 20 REC SEE TBL E1
532	12A	1	JL105	105435291	X-DIM	SM// SMC1 MCTU2	119- 156 OR 145- 156	300	R	5-9 OR 3-8	SD5D160-01		TMS0	/ /- / /	/ /		SEE TBL BD	SD5D147-01			1	66 84	FORM PER ED5D518-30 G 19 XMT SEE TBL E1
534	12A	1	JL107	105435309	X-DIM	SM// SMC1 MCTU2	119- 156 OR 145- 156	300	R	5-9 OR 3-8	SD5D160-01		TMS0	/ /- / /	/ /		SEE TBL BD	SD5D147-01			1	66 84	FORM PER ED5D518-30 G 20 REC SEE TBL E1
536	12A	1	JL102	105435291	X-DIM	SM// SMC1 MCTU2	128- 156 OR 153- 156	332	R	5-1 OR 3-0	SD5D160-01		TMS1	/ /- / /	/ /		SEE TBL BE	SD5D147-01			1	66 84	FORM PER ED5D518-30 G 19 XMT SEE TBL E1
538	12A	1	JL104	105435309	X-DIM	SM// SMC1 MCTU2	128- 156 OR 153- 156	332	R	5-1 OR 3-0	SD5D160-01		TMS1	/ /- / /	/ /		SEE TBL BE	SD5D147-01			1	66 84	FORM PER ED5D518-30 G 20 REC SEE TBL E1
540	12A	1	JL106	105435291	X-DIM	SM// SMC1 MCTU2	128- 156 OR 153- 156	300	R	5-1 OR 3-0	SD5D160-01		TMS1	/ /- / /	/ /		SEE TBL BE	SD5D147-01			1	66 84	FORM PER ED5D518-30 G 19 XMT SEE TBL E1
542	12A	1	JL108	105435309	X-DIM	SM// SMC1 MCTU2	128- 156 OR 153- 146	300	R	5-1 OR 3-0	SD5D160-01		TMS1	/ /- / /	/ /		SEE TBL BE	SD5D147-01			1	66 84	FORM PER ED5D518-30 G 20 REC SEE TBL E1
544	12B	1	JL101	105435291	X-DIM	TMS0	036- 086	100	L	59	SD5D147-01		MSG0 MICU2 0	019- 120	100	R	6-8	SD5D146-01			1	66 84	
546	12B	1	JL103	105435309	X-DIM	TMS0	036- 086	113	L	5-9	SD5D147-01		MSG0 MICU2 0	019- 120	113	R	6-8	SD5D146-01			1	66 84	
548	12B	19	JL102	105435291	X-DIM	TMS1	136- 086	100	L	5-9	SD5D147-01		MSG1 MICU2 1	119- 120	100	R	6-7	SD5D146-01			1	66 84	
550	12B	1	JL104	105435291	X-DIM	TMS1	136- 086	113	L	59	SD5D147-01		MSG1 MICU2 1	119- 120	113	R	6-7	SD5D146-01			1	66 84	

COPYRIGHT @ 2001 LUCENT TECHNOLOGIES
ALL RIGHTS RESERVED

BT13

INTERCABINET CABLING
FOR
5ESS * SWITCH
*LUCENT TRADEMARK

DWG SIZE C2 | ISSUE 117

LUCENT TECHNOLOGIES INC | ED5D500-21 | SHEET A50 OF 292

PRINTED IN U.S.A.

CONNECTORIZED CABLING

ITEM	LIST OR GROUP	NBR RECD	CABLE IDENT	CABLE CODE	B DIM	FROM							TO							ROUTE	SHLD	NOTE	REMARKS
						FRAME OR UNIT	EQL	TERM	POS	DROP LGTH	WIRING DIAGRAM	FIGURE	FRAME OR UNIT	EQL	TERM	POS	DROP LGTH	WIRING DIAGRAM	FIGURE				
551	12C	1	JL101	105435291	X-DIM	M // TRCU2	SEE TBL E3	SEE TBL E3	L	SEE TBL B02	SD5D086-02		TMS0	/ /- / /	/ /		SEE TBL BD	SD5D147-01			1	66 84	FORM PER ED5D518-30 G 19 SMT SEE TBL E3
552	12C	1	JL103	105435309	X-DIM	M// TRCU2	SEE TBL E3	SEE TBL E3	L	SEE TBL B02	SD5D086-02		TMS0	/ /- / /	/ /		SEE TBL BD	SD5D147-01			1	66 84	FORM PER ED5D518-30 G 20 REC SEE TBL E3
553	12C	1	JL105	105435291	X-DIM	M// TRCU2	SEE TBL E3	SEE TBL E3	L	SEE TBL B02	SD5D086-02		TMS0	/ /- / /	/ /		SEE TBL BD	SD5D147-01			1	66 84	FORM PER ED5D518-30 G 19 XMT SEE TBL E3
554	12C	1	JL107	105435309	X-DIM	M// TRCU2	SEE TBL E3	SEE TBL E3	L	SEE TBL B02	SD5D086-02		TMS0	/ /- / /	/ /		SEE TBL BD	SD5D147-01			1	66 84	FORM PER ED5D518-30 G 20 REC SEE TBL E3
555	12C	1	JL102	105435291	X-DIM	M// TRCU2	SEE TBL E3	SEE TBL E3	R	SEE TBL B02	SD5D086-02		TMS1	/ /- / /	/ /		SEE TBL BE	SD5D147-01			1	66 84	FORM PER ED5D518-30 G 19 XMT SEE TBL E3
556	12C	1	JL104	105435309	X-DIM	M// TRCU2	SEE TBL E3	SEE TBL E3	R	SEE TBL B02	SD5D086-02		TMS1	/ /- / /	/ /		SEE TBL BE	SD5D147-01			1	66 84	FORM PER ED5D518-30 G 20 REC SEE TBL E3
557	12C	1	JL106	105435291	X-DIM	M// TRCU2	SEE TBL E3	SEE TBL E3	R	SEE TBL B02	SD5D086-02		TMS1	/ /- / /	/ /		SEE TBL BE	SD5D147-01			1	66 84	FORM PER ED5D518-30 G 19 XMT SEE TBL E3
558	12C	1	JL108	105435309	X-DIM	M// TRCU2	SEE TBL E3	SEE TBL E3	R	SEE TBL B02	SD5D086-02		TMS1	/ /- / /	/ /		SEE TBL BE	SD5D147-01			1	66 84	FORM PER ED5D518-30 G 20 REC SEE TBL E3
559	12D	1	JL101	105435291	X-DIM	M// TRCU2	SEE TBL H4 H5 H6	SEE TBL H4 H5 H6	L	SEE TBL B02	SD5D086-02		CM2 '0'	/ /- / /	/ /	L	SEE TBL BW OR BX()	SD5D140-01			1	66 84	FORM PER ED5D518-30 G 19 XMT SEE TBL H4 (SINGLE FAB) H5 (DUAL FAB ODD SM) H6 (DUAL FAB EVEN SM) FOR PORT ASGNT.
560	12D	1	JL103	105435309	X-DIM	M// TRCU2	SEE TBL H4 H5 H6	SEE TBL H4 H5 H6	L	SEE TBL B02	SD5D086-02		CM2 '0'	/ /- / /	/ /	L	SEE TBL BW OR BX()	SD5D140-01			1	66 84	FORM PER ED5D518-30 G 20 REC SEE TBL H4 (SINGLE FAB) H5 (DUAL FAB ODD SM) H6 (DUAL FAB EVEN SM) FOR PORT ASGNT.
561	12D	1	JL105	105435291	X-DIM	M// TRCU2	SEE TBL H4 H5 H6	SEE TBL H4 H5 H6	L	SEE TBL B02	SD5D086-02		CM2 '0'	/ /- / /	/ /	L	SEE TBL BW OR BX()	SD5D140-01			1	66 84	FORM PER ED5D518-30 G 19 XMT SEE TBL H4 (SINGLE FAB) H5 (DUAL FAB ODD SM) H6 (DUAL FAB EVEN SM) FOR PORT ASGNT.
562	12D	1	JL107	105435309	X-DIM	M// TRCU2	SEE TBL H4 H5 H6	SEE TBL H4 H5 H6	L	SEE TBL B02	SD5D086-02		CM2 '0'	/ /- / /	/ /	L	SEE TBL BW OR BX()	SD5D140-01			1	66 84	FORM PER ED5D518-30 G 20 REC SEE TBL H4 (SINGLE FAB) H5 (DUAL FAB ODD SM) H6 (DUAL FAB EVEN SM) FOR PORT ASGNT.
563	12D	1	JL102	105435291	X-DIM	M// TRCU2	SEE TBL H4 H5 H6	SEE TBL H4 H5 H6		SEE TBL	SD5D086-02		CM2 '1' B02	/ /- / /	/ /	L	SEE TBL BW OR BX()	SD5D140-01			1	66 84	FORM PER ED5D518-30 G 19 XMT SEE TBL H4 (SINGLE FAB) H5 (DUAL FAB ODD SM) H6 (DUAL FAB EVEN SM) FOR PORT ASGNT.

COPYRIGHT @ 2001 LUCENT TECHNOLOGIES
ALL RIGHTS RESERVED

BT13

INTERCABINET CABLING
FOR
5ESS * SWITCH
*LUCENT TRADEMARK

DWG SIZE C2 | ISSUE 117

LUCENT TECHNOLOGIES INC | ED5D500-21 | SHEET OF A51 292

PRINTED IN U.S.A.

CONNECTORIZED CABLING

ITEM	LIST OR GROUP	NBR RECD	CABLE IDENT	CABLE CODE	B DIM	FROM							TO							ROUTE	SHLD	NOTE	REMARKS
						FRAME OR UNIT	EQL	TERM	POS	DROP LGTH	WIRING DIAGRAM	FIGURE	FRAME OR UNIT	EQL	TERM	POS	DROP LGTH	WIRING DIAGRAM	FIGURE				
564	12D	1	JL104	105435309	X-DIM	M// TRCU2	SEE TBL H4 H5 H6	SEE TBL H4 H5 H6	R	SEE TBL B02	SD5D086-02		CM2 '1'	/ /- / /	/ /	L	SEE TBL BW OR BX()	SD5D140-01			1	66 84	FORM PER ED5D518-30 G 20 REC SEE TBL H4 (SINGLE FAB) H5 (DUAL FAB ODD SM) H6 (DUAL FAB EVEN SM) FOR PORT ASGNT.
565	12D	1	JL106	105435291	X-DIM	M// TRCU2	SEE TBL H4 H5 H6	SEE TBL H4 H5 H6	R	SEE TBL B02	SD5D086-02		CM2 '1'	/ /- / /	/ /	L	SEE TBL BW OR BX()	SD5D140-01			1	66 84	FORM PER ED5D518-30 G 19 XMT SEE TBL H4 (SINGLE FAB) H5 (DUAL FAB ODD SM) H6 (DUAL FAB EVEN SM) FOR PORT ASGNT.
566	12D	1	JL108	105435309	X-DIM	M// TRCU2	SEE TBL H4 H5 H6	SEE TBL H4 H5 H6	R	SEE TBL B02	SD5D086-02		CM2 '1'	/ /- / /	/ /	L	SEE TBL BW OR BX()	SD5D140-01			1	66 84	FORM PER ED5D518-30 G 20 REC SEE TBL H4 (SINGLE FAB) H5 (DUAL FAB ODD SM) H6 (DUAL FAB EVEN SM) FOR PORT ASGNT.
567	12E	1	JL101	105435291	X-DIM	M// TRCU1	SEE TBL E2	SEE TBL E2	L	SEE TBL B01	SD5D086-01		TMS0	/ /- / /	/ /		SEE TBL BD	SD5D147-01			1	66 84	FORM PER ED5D518-30 G 19 XMT SEE TBL E2
568	12E	1	JL103	105435309	X-DIM	M// TRCU1	SEE TBL E2	SEE TBL E2	L	SEE TBL B01	SD5D086-01		TMS0	/ /- / /	/ /		SEE TBL BD	SD5D147-01			1	66 84	FORM PER ED5D518-30 G 20 REC SEE TBL E2
569	12E	1	JL105	105435291	X-DIM	M// TRCU1	SEE TBL E2	SEE TBL E2	L	SEE TBL B01	SD5D086-01		TMS0	/ /- / /	/ /		SEE TBL BD	SD5D147-01			1	66 84	FORM PER ED5D518-30 G 19 XMT SEE TBL E2
570	12E	1	JL107	105435309	X-DIM	M// TRCU1	SEE TBL E2	SEE TBL E2	L	SEE TBL B01	SD5D086-01		TMS0	/ /- / /	/ /		SEE TBL BD	SD5D147-01			1	66 84	FORM PER ED5D518-30 G 20 REC SEE TBL E2
571	12E	1	JL102	105435291	X-DIM	M// TRCU	SEE TBL E2	SEE TBL E2	R	SEE TBL B01	SD5D086-01		TMS1	/ /- / /	/ /		SEE TBL BE	SD5D147-01			1	66 84	FORM PER ED5D518-30 G 19 XMT SEE TBL E2
572	12E	1	JL104	105435309	X-DIM	M// TRCU	SEE TBL E2	SEE TBL E2	R	SEE TBL B01	SD5D086-01		TMS1	/ /- / /	/ /		SEE TBL BE	SD5D147-01			1	66 84	FORM PER ED5D518-30 G 20 REC SEE TBL E2
573	12E	1	JL106	105435291	X-DIM	M// TRCU	SEE TBL E2	SEE TBL E2	R	SEE TBL B01	SD5D086-01		TMS1	/ /- / /	/ /		SEE TBL BE	SD5D147-01			1	66 84	FORM PER ED5D518-30 G 19 XMT SEE TBL E2
574	12E	1	JL108	105435309	X-DIM	M// TRCU	SEE TBL E2	SEE TBL E2	R	SEE TBL B01	SD5D086-01		TMS1	/ /- / /	/ /		SEE TBL BE	SD5D147-01			1	66 84	FORM PER ED5D518-30 G 20 REC SEE TBL E2
575	12F	1	JL101	105435291	X-DIM	M// TRCU	SEE TBL H1 H2 H3	SEE TBL H1 H2 H3	L	SEE TBL B01	SD5D086-01		CM2 '0'	/ /- / /	/ /	L	SEE TBL BW OR BX()	SD5D140-01			1	66 84	FORM PER ED5D518-30 G 19 XMT SEE TBL H1 (SINGLE FAB) H2 (DUAL FAB ODD SM) H3 (DUAL FAB EVEN SM) FOR PORT ASGNT.
576	12F	1	JL103	105435309	X-DIM	M// TRCU	SEE TBL H1 H2 H3	SEE TBL H1 H2 H3	R	SEE TBL B01	SD5D086-01		CM2 '0'	/ /- / /	/ /	L	SEE TBL BW OR BX()	SD5D140-01			1	66 84	FORM PER ED5D518-30 G 20 REC SEE TBL H1 (SINGLE FAB) H2 (DUAL FAB ODD SM) H3 (DUAL FAB EVEN SM) FOR PORT ASGNT.

COPYRIGHT @ 2001 LUCENT TECHNOLOGIES
ALL RIGHTS RESERVED

BT13

INTERCABINET CABLING
FOR
5ESS * SWITCH
*LUCENT TRADEMARK

DWG SIZE C2 | ISSUE 117

PRINTED IN U.S.A.

CONNECTORIZED CABLING

ITEM	LIST OR GROUP	NBR RECD	CABLE IDENT	CABLE CODE	B DIM	FROM							TO							ROUTE	SHLD	NOTE	REMARKS
						FRAME OR UNIT	EQL	TERM	POS	DROP LGTH	WIRING DIAGRAM	FIGURE	FRAME OR UNIT	EQL	TERM	POS	DROP LGTH	WIRING DIAGRAM	FIGURE				
577	12F	1	JL105	105435291	X-DIM	M// TRCU	SEE TBL H1 H2 H3	SEE TBL H1 H2 H3	L	SEE TBL B01	SD5D086-01		CM2 '0'	/ /- / /	/ /	L	SEE TBL BW OR BX()	SD5D140-01			1	66 84	FORM PER ED5D518-30 G 19 XMT SEE TBL H1 (SINGLE FAB) H2 (DUAL FAB ODD SM) H3 (DUAL FAB EVEN SM) FOR PORT ASGNT.
578	12F	1	JL107	105435309	X-DIM	M// TRCU	SEE TBL H1 H2 H3	SEE TBL H1 H2 H3	L	SEE TBL B01	SD5D086-01		CM2 '0'	/ /- / /	/ /	L	SEE TBL BW OR BX()	SD5D140-01			1	66 84	FORM PER ED5D518-30 G 20 REC SEE TBL H1 (SINGLE FAB) H2 (DUAL FAB ODD SM) H3 (DUAL FAB EVEN SM) FOR PORT ASGNT.
579	12F	1	JL102	105435291	X-DIM	M// TRCU	SEE TBL H1 H2 H3	SEE TBL H1 H2 H3	R	SEE TBL	SD5D086-01		CM2 '1' B01	/ /- / /	/ /	L	SEE TBL BW OR BX()	SD5D140-01			1	66 84	FORM PER ED5D518-30 G 19 XMT SEE TBL H1 (SINGLE FAB) H2 (DUAL FAB ODD SM) H3 (DUAL FAB EVEN SM) FOR PORT ASGNT.
580	12F	1	JL104	105435309	X-DIM	M// TRCU	SEE TBL H1 H2 H3	SEE TBL H1 H2 H3	R	SEE TBL B01	SD5D086-01		CM2 '1'	/ /- / /	/ /	L	SEE TBL BW OR BX()	SD5D140-01			1	66 84	FORM PER ED5D518-30 G 20 REC SEE TBL H1 (SINGLE FAB) H2 (DUAL FAB ODD SM) H3 (DUAL FAB EVEN SM) FOR PORT ASGNT.
581	12F	1	JL106	1054135291	X-DIM	M// TRCU	SEE TBL H1 H2 H3	SEE TBL H1 H2 H3	R	SEE TBL B01	SD5D086-01		CM2 '1'	/ /- / /	/ /	L	SEE TBL BW OR BX()	SD5D140-01			1	66 84	FORM PER ED5D518-30 G 19 XMT SEE TBL H1 (SINGLE FAB) H2 (DUAL FAB ODD SM) H3 (DUAL FAB EVEN SM) FOR PORT ASGNT.
582	12F	1	JL108	105435309	X-DIM	M// TRCU	SEE TBL H1 H2 H3	SEE TBL H1 H2 H3	R	SEE TBL B01	SD5D086-01		CM2 '1'	/ /- / /	/ /	L	SEE TBL BW OR BX()	SD5D140-01			1	66 84	FORM PER ED5D518-30 G 20 REC SEE TBL H1 (SINGLE FAB) H2 (DUAL FAB ODD SM) H3 (DUAL FAB EVEN SM) FOR PORT ASGNT.
583	12G	1	JL101	105435291	X-DIM	SM// SMC // MCTU	136- 084	332	L	5-0	SD5D118-02		CM2 '0'	/ /- / /	/ /	L	SEE TBL BW OR BX()	SD5D140-01			1	66 84	FORM PER ED5D518-30 G 19 XMT SEE TBL F1 (SINGLE FAB) F2 (DUAL FAB ODD SM) F3 (DUAL FAB EVEN SM) FOR PORT ASGNT.
584	12G	1	JL103	105435309	X-DIM	SM// SMC // MCTU	136- 084	332	L	5-0	SD5D118-02		CM2 '0'	/ /- / /	/ /	L	SEE TBL BW OR BX()	SD5D140-01			1	66 84	FORM PER ED5D518-30 G 20 REC SEE TBL F1 (SINGLE FAB) F2 (DUAL FAB ODD SM) F3 (DUAL FAB EVEN SM) FOR PORT ASGNT.
585	12G	1	JL105	105435291	X-DIM	SM// SMC // MCTU	136- 084	300	L	5-0	SD5D118-02		CM2 '0'	/ /- / /	/ /	L	SEE TBL BW OR BX()	SD5D140-01			1	66 84	FORM PER ED5D518-30 G 19 XMT SEE TBL F1 (SINGLE FAB) F2 (DUAL FAB ODD SM) F3 (DUAL FAB EVEN SM) FOR PORT ASGNT.
586	12G	1	JL107	105435309	X-DIM	SM// SMC // MCTU	136- 084	300	L	5-0	SD5D118-02		CM2 '0'	/ /- / /	/ /	L	SEE TBL BW OR BX()	SD5D140-01			1	66 84	FORM PER ED5D518-30 G 20 REC SEE TBL F1 (SINGLE FAB) F2 (DUAL FAB ODD SM) F3 (DUAL FAB EVEN SM) FOR PORT ASGNT.
587	12G	1	JL102	105435291	X-DIM	SM// SMC // MCTU	136- 098	332	R	5-0	SD5D118-02		CM2 '1'	/ /- / /	/ /	L	SEE TBL BW OR BX()	SD5D140-01			1	66 84	FORM PER ED5D518-30 G 19 XMT SEE TBL F1 (SINGLE FAB) F2 (DUAL FAB ODD SM) F3 (DUAL FAB EVEN SM) FOR PORT ASGNT.

COPYRIGHT @ 2001 LUCENT TECHNOLOGIES
ALL RIGHTS RESERVED

BT13

INTERCABINET CABLING
FOR
5ESS * SWITCH
*LUCENT TRADEMARK

DWG SIZE C2 | ISSUE 117

LUCENT TECHNOLOGIES INC | ED5D500-21 | SHEET A53 OF 292

PRINTED IN U.S.A.

CONNECTORIZED CABLING

ITEM	LIST OR GROUP	NBR RECD	CABLE IDENT	CABLE CODE	B DIM	FROM							TO							ROUTE	SHLD	NOTE	REMARKS
						FRAME OR UNIT	EQL	TERM	POS	DROP LGTH	WIRING DIAGRAM	FIGURE	FRAME OR UNIT	EQL	TERM	POS	DROP LGTH	WIRING DIAGRAM	FIGURE				
588	12G	1	JL104	105435309	X-DIM	SM// SMC // MCTU	136- 098	332	R	5-0	SD5D118-02		CM2 '1'	/ /- / /	/ /	L	SEE TBL BW OR BX()	SD5D140-01			1	66 84	FORM PER ED5D518-30 G 20 REC SEE TBL F1 (SINGLE FAB) F2 (DUAL FAB ODD SM) F3 (DUAL FAB EVEN SM) FOR PORT ASGNT.
589	12G	1	JL106	105435291	X-DIM	SM// SMC // MCTU	136- 098	300	R	5-0	SD5D118-02		CM2 '1'	/ /- / /	/ /	L	SEE TBL BW OR BX()	SD5D140-01			1	66 84	FORM PER ED5D518-30 G 19 XMT SEE TBL F1 (SINGLE FAB) F2 (DUAL FAB ODD SM) F3 (DUAL FAB EVEN SM) FOR PORT ASGNT.
590	12G	1	JL108	105435309	X-DIM	SM// SMC // MCTU	136- 098	300	R	5-0	SD5D118-02		CM2 '1'	/ /- / /	/ /	L	SEE TBL BW OR BX()	SD5D140-01			1	66 84	FORM PER ED5D518-30 G 20 REC SEE TBL F1 (SINGLE FAB) F2 (DUAL FAB ODD SM) F3 (DUAL FAB EVEN SM) FOR PORT ASGNT.
591	12H	1	JL101	105435291	X-DIM	SM// SMC // MCTU2	119- 156 OR 145-156	332	R	5-9 OR 3-8	SD5D160-01		CM2 '0'	/ /- / /	/ /	L	SEE TBL BW OR BX()	SD5D140-01			1	66 84	FORM PER ED5D518-30 G 19 XMT SEE TBL F1 (SINGLE FAB) F2 (DUAL FAB ODD SM) F3 (DUAL FAB EVEN SM) FOR PORT ASGNT.
592	12H	1	JL103	105435309	X-DIM	SM// SMC // MCTU2	119- 156 OR 145-156	332	R	5-9 OR 3-8	SD5D160-01		CM2 '0'	/ /- / /	/ /	L	SEE TBL BW OR BX()	SD5D140-01			1	66 84	FORM PER ED5D518-30 G 20 REC SEE TBL F1 (SINGLE FAB) F2 (DUAL FAB ODD SM) F3 (DUAL FAB EVEN SM) FOR PORT ASGNT.
593	12H	1	JL105	105435291	X-DIM	SM// SMC // MCTU2	119- 156 OR 145-156	300	R	5-9 OR 3-8	SD5D160-01		CM2 '0'	/ /- / /	/ /	L	SEE TBL BW OR BX()	SD5D140-01			1	66 84	FORM PER ED5D518-30 G 19 XMT SEE TBL F1 (SINGLE FAB) F2 (DUAL FAB ODD SM) F3 (DUAL FAB EVEN SM) FOR PORT ASGNT.
594	12H	1	JL107	105435309	X-DIM	SM// SMC // MCTU2	119- 156 OR 145-156	300	R	5-9 OR 3-8	SD5D160-01		CM2 '0'	/ /- / /	/ /	L	SEE TBL BW OR BX()	SD5D140-01			1	66 84	FORM PER ED5D518-30 G 20 REC SEE TBL F1 (SINGLE FAB) F2 (DUAL FAB ODD SM) F3 (DUAL FAB EVEN SM) FOR PORT ASGNT.
595	12H	1	JL102	105435291	X-DIM	SM// SMC // MCTU2	128- 156 OR 153-156	332	R	5-1 OR 3-0	SD5D160-01		CM2 '1'	/ /- / /	/ /	L	SEE TBL BW OR BX()	SD5D140-01			1	66 84	FORM PER ED5D518-30 G 19 XMT SEE TBL F1 (SINGLE FAB) F2 (DUAL FAB ODD SM) F3 (DUAL FAB EVEN SM) FOR PORT ASGNT.
596	12H	1	JL104	105435309	X-DIM	SM// SMC // MCTU2	128- 156 OR 153-156	332	R	5-1 OR 3-0	SD5D160-01		CM2 '1'	/ /- / /	/ /	L	SEE TBL BW OR BX()	SD5D140-01			1	66 84	FORM PER ED5D518-30 G 20 REC SEE TBL F1 (SINGLE FAB) F2 (DUAL FAB ODD SM) F3 (DUAL FAB EVEN SM) FOR PORT ASGNT.
597	12H	1	JL106	105435291	X-DIM	SM// SMC // MCTU2	128- 156 OR 153-156	300	R	5-1 OR 3-0	SD5D160-01		CM2 '1'	/ /- / /	/ /	L	SEE TBL BW OR BX()	SD5D140-01			1	66 84	FORM PER ED5D518-30 G 19 XMT SEE TBL F1 (SINGLE FAB) F2 (DUAL FAB ODD SM) F3 (DUAL FAB EVEN SM) FOR PORT ASGNT.
598	12H	1	JL108	105435309	X-DIM	SM// SMC // MCTU2	128- 156 OR 153-156	300	R	5-1 OR 3-0	SD5D160-01		CM2 '1'	/ /- / /	/ /	L	SEE TBL BW OR BX()	SD5D140-01			1	66 84	FORM PER ED5D518-30 G 20 REC SEE TBL F1 (SINGLE FAB) F2 (DUAL FAB ODD SM) F3 (DUAL FAB EVEN SM) FOR PORT ASGNT.

COPYRIGHT @ 2001 LUCENT TECHNOLOGIES
ALL RIGHTS RESERVED

BT13

INTERCABINET CABLING
FOR
5ESS * SWITCH
*LUCENT TRADEMARK

DWG SIZE C2 | ISSUE 117

LUCENT TECHNOLOGIES INC | ED5D500-21 | SHEET A54 OF 292

PRINTED IN U.S.A.

CONNECTORIZED CABLING

ITEM	LIST OR GROUP	NBR RECD	CABLE IDENT	CABLE CODE	B DIM	FROM							TO							ROUTE	SHLD	NOTE	REMARKS
						FRAME OR UNIT	EQL	TERM	POS	DROP LGTH	WIRING DIAGRAM	FIGURE	FRAME OR UNIT	EQL	TERM	POS	DROP LGTH	WIRING DIAGRAM	FIGURE				
601	13 |	1	JL113	105435291	X-DIM	SM// SMC // TSIU4 OR TSIU4-2	/ /- / /	TX	R	4-0	SD5D196-01 SD5D196-02		CM2 '0'	/ /- / /	/ /	L	SEE TBL BW OR BX()	SD5D140-01			1	66 84	FORM PER ED5D518-30 G 19 XMT TSIU4(3NB-1) TSIU4-2(3NB-2) SEE TBL F5 (SINGLE FAB) SEE TBL N5(SINGLE FAB) F4 (DUAL FAB) N4(DUAL FAB) FOR PORT ASGNT. FOR PORT ASGNT
602	13 |	1	JL111	105435309	X-DIM	SM// SMC // TSIU4 OR TSIU4-2	/ /- / /	RX	R	4-0	SD5D196-01 SD5D196-02		CM2 '0'	/ /- / /	/ /	L	SEE TBL BW OR BX()	SD5D140-01			1	66 84	FORM PER ED5D518-30 G 20 REC TSIU4(3NB-1) TSIU4-2(3NB-2) SEE TBL F5 (SINGLE FAB) SEE TBL N5 (SINGLE FAB) F4 (DUAL FAB) N4 (DUAL FAB) FOR PORT ASGNT. FOR PORT ASGNT.
603	13 |	1	JL112	105435291	X-DIM	SM// SMC // TSIU4 OR TSIU4-2	/ /- / /	TX	R	4-0	SD5D196-01 SD5D196-02		CM2 '0'	/ /- / /	/ /	L	SEE TBL BW OR BX()	SD5D140-01			1	66 84	FORM PER ED5D518-30 G 19 XMT TSIU4(3NB-1) TSIU4-2(3NB-2) SEE TBL F5 (SINGLE FAB) SEE TBL N5 (SINGLE FAB) F4 (DUAL FAB) N4 (DUAL FAB) FOR PORT ASGNT. FOR PORT ASGNT)
604	13 |	1	JL110	105435309	X-DIM	SM// SMC // TSIU4 OR TSIU4-2	/ /- / /	RX	R	4-0	SD5D196-01 SD5D196-02		CM2 '0'	/ /- / /	/ /	L	SEE TBL BW OR BX()	SD5D140-01			1	66 84	FORM PER ED5D518-30 G 20 REC TSIU4(3NB-1) TSIU4-2(3NB-2) SEE TBL F5 (SINGLE FAB) SEE TBL N5 (SINGLE FAB) F4 (DUAL FAB) N4 (DUAL FAB) FOR PORT ASGNT. FOR PORT ASGNT.
605	13 |	1	JL113A	105435291	X-DIM	SM// SMC // TSIU4 OR TSIU4-2	/ /- / /	TX	R	4-0	SD5D196-01 SD5D196-02		CM2 '1'	/ /- / /	/ /	L	SEE TBL BW OR BX()	SD5D140-01			1	66 84	FORM PER ED5D518-30 G 19 XMT TSIU4(3NB-1) TSIU4-2(3NB-2) SEE TBL F5 (SINGLE FAB) SEE TBL N5 (SINGLE FAB) F4 (DUAL FAB) N4 (DUAL FAB) FOR PORT ASGNT. FOR PORT ASGNT.
606	13 |	1	JL111A	105435309	X-DIM	SM// SMC // TSIU4 OR TSIU4-2	/ /- / /	RX	R	4-0	SD5D196-01 SD5D196-02		CM2 '1'	/ /- / /	/ /	L	SEE TBL BW OR BX()	SD5D140-01			1	66 84	FORM PER ED5D518-30 G 20 REC TSIU4(3NB-1) TSUI4-2(3NB-2) SEE TBL F5 (SINGLE FAB) SEE TBL N5 (SINGLE FAB) F4 (DUAL FAB) N4 (DUAL FAB) FOR PORT ASGNT. FOR PORT ASGNT.
607	13 |	1	JL112A	105435291	X-DIM	SM// SMC // TSIU4 OR TSIU4-2	/ /- / /	TX	R	4-0	SD5D196-01 SD5D196-02		CM2 '1'	/ /- / /	/ /	L	SEE TBL BW OR BX()	SD5D140-01			1	66 84	FORM PER ED5D518-30 G 19 XMT TSIU4(3NB-1) TSIU4-2(3NB-2) SEE TBL F5 (SINGLE FAB) SEE TBL N5 (SINGLE FAB) F4 (DUAL FAB) N4 (DUAL FAB) FOR PORT ASGNT. FOR PORT ASGNT).
608	13 |	1	JL110A	105435309	X-DIM	SM// SMC // TSIU4 OR TSIU4-2	/ /- / /	RX	R	4-0	SD5D196-01 SD5D196-02		CM2 '1'	/ /- / /	/ /	L	SEE TBL BW OR BX()	SD5D140-01			1	66 84	FORM PER ED5D518-30 G 20 REC TSIU4(3NB-1) TSIU4-2(3NB-2) SEE TBL F5 (SINGLE FAB) SEE TBL N5 (SINGLE FAB) F4 (DUAL FAB) N4 (DUAL FAB) FOR PORT ASGNT. FOR PORT ASGNT.
610	14 |	1	JL113	105435291	X-DIM	SM// SMC // TSIU4 OR TSIU4-2	/ /- / / SEE FIG. Z	TX	R	4-0	SD5D196-01 SD5D196-02		LTP( ) DNU-S()	/ /- / /	/ /	L	SEE TBL BX-5	SD5D525-01			1	66 84	FORM PER ED5D518-30 G 19 XMT
611	14 |	1	JL111	105435309	X-DIM	SM// SMC // TSIU4 OR TSIU4-2	/ /- / / SEE FIG. Z	RX	R	4-0	SD5D196-01 SD5D196-02		LTP( ) DNU-S()	/ /- / /	/ /	L	SEE TBL BX-5	SD5D525-01			1	66 84	FORM PER ED5D518-30 G 20 REC
612	14 |	1	JL113A	105435291	X-DIM	SM// SMC // TSIU4 OR TSIU4-2	/ /- / / SEE FIG. Z	TX	R	4-0	SD5D196-01 SD5D196-02		LTP( ) DNU-S()	/ /- / /	/ /	L	SEE TBL BX-5	SD5D525-01			1	66 84	FORM PER ED5D518-30 G 19 XMT

COPYRIGHT @ 2001 LUCENT TECHNOLOGIES
ALL RIGHTS RESERVED

BT13

INTERCABINET CABLING
FOR
5ESS * SWITCH
*LUCENT TRADEMARK

DWG SIZE C2 | ISSUE 117

LUCENT TECHNOLOGIES INC | ED5D500-21 | SHEET A55 OF 292

PRINTED IN U.S.A.

CONNECTORIZED CABLING

ITEM	LIST OR GROUP	NBR RECD	CABLE IDENT	CABLE CODE	B DIM	FROM							TO							ROUTE	SHLD	NOTE	REMARKS
						FRAME OR UNIT	EQL	TERM	POS	DROP LGTH	WIRING DIAGRAM	FIGURE	FRAME OR UNIT	EQL	TERM	POS	DROP LGTH	WIRING DIAGRAM	FIGURE				
613	14 |	1	JL111A	105435309	X-DIM	SM// SMC // TSIU4 OR TSIU4-2	/ /- / / SEE FIG. Z	RX	R	4-0	SD5D196-01 SD5D196-02		LTP( ) DNU-S()	/ /- / /	/ /	L	SEE TBL BX-5	SD5D525-01			1	66 84	FORM PER ED5D518-30 G 20 REC
620	15	1	JL101	105435291	X-DIM	SM// SMC // MCTU3	128- 084 OR 145-084	332	R	5-1 OR 3-8	SD5D160-01		CM2 '0'	/ /- / /	/ /	L	SEE TBL BW OR BX()	SD5D140-01			1	66 84	FORM PER ED5D518-30 G 19 XMT SEE TBL F1 (SINGLE FAB) F2 (DUAL FAB ODD SM) F3 (DUAL FAB EVEN SM) FOR PORT ASGNT.
621	15	1	JL103	105435309	X-DIM	SM// SMC // MCTU3	128- 084 OR 145-084	345	R	5-1 OR 3-8	SD5D160-01		CM2 '0'	/ /- / /	/ /	L	SEE TBL BW OR BX()	SD5D140-01			1	66 84	FORM PER ED5D518-30 G 20 REC SEE TBL F1 (SINGLE FAB) F2 (DUAL FAB ODD SM) F3 (DUAL FAB EVEN SM) FOR PORT ASGNT.
622	15	1	JL105	105435291	X-DIM	SM// SMC // MCTU3	128- 084 OR 145-084	313	R	5-1 OR 3-8	SD5D160-01		CM2 '0'	/ /- / /	/ /	L	SEE TBL BW OR BX()	SD5D140-01			1	66 84	FORM PER ED5D518-30 G 19 XMT SEE TBL F1 (SINGLE FAB) F2 (DUAL FAB ODD SM) F3 (DUAL FAB EVEN SM) FOR PORT ASGNT.
623	15	1	JL107	105435309	X-DIM	SM// SMC // MCTU3	128- 084 OR 145-084	300	R	5-1 OR 3-8	SD5D160-01		CM2 '0'	/ /- / /	/ /	L	SEE TBL BW OR BX()	SD5D140-01			1	66 84	FORM PER ED5D518-30 G 20 REC SEE TBL F1 (SINGLE FAB) F2 (DUAL FAB ODD SM) F3 (DUAL FAB EVEN SM) FOR PORT ASGNT.
624	15	1	JL102	105435291	X-DIM	SM// SMC // MCTU3	128- 176 OR 145-176	332	R	5-1 OR 3-8	SD5D160-01		CM2 '1'	/ /- / /	/ /	L	SEE TBL BW OR BX()	SD5D140-01			1	66 84	FORM PER ED5D518-30 G 19 XMT SEE TBL F1 (SINGLE FAB) F2 (DUAL FAB ODD SM) F3 (DUAL FAB EVEN SM) FOR PORT ASGNT.
625	15	1	JL104	105435309	X-DIM	SM// SMC // MCTU3	128- 176 OR 145-176	345	R	5-1 OR 3-8	SD5D160-01		CM2 '1'	/ /- / /	/ /	L	SEE TBL BW OR BX()	SD5D140-01			1	66 84	FORM PER ED5D518-30 G 20 REC SEE TBL F1 (SINGLE FAB) F2 (DUAL FAB ODD SM) F3 (DUAL FAB EVEN SM) FOR PORT ASGNT.
626	15	1	JL106	105435291	X-DIM	SM// SMC // MCTU3	128- 176 OR 145-176	313	R	5-1 OR 3-8	SD5D160-01		CM2 '1'	/ /- / /	/ /	L	SEE TBL BW OR BX()	SD5D140-01			1	66 84	FORM PER ED5D518-30 G 19 XMT SEE TBL F1 (SINGLE FAB) F2 (DUAL FAB ODD SM) F3 (DUAL FAB EVEN SM) FOR PORT ASGNT.
627	15	1	JL108	105435309	X-DIM	SM// SMC // MCTU3	128- 176 OR 145-176	300	R	5-1 OR 3-8	SD5D160-01		CM2 '1'	/ /- / /	/ /	L	SEE TBL BW OR BX()	SD5D140-01			1	66 84	FORM PER ED5D518-30 G 20 REC SEE TBL F1 (SINGLE FAB) F2 (DUAL FAB ODD SM) F3 (DUAL FAB EVEN SM) FOR PORT ASGNT.
636	17 |	1	JL113	105435291	X-DIM	SM// SMC // TSIU4 OR TSIU4-2	/ /- / /	TX	R	4-0	SD5D196-01 SD5D196-02		SM// LTP // PSU2//	/ /- / /	/ /	L	SEE TBL BX-6	SD5D523-01			1	66 84	FORM PER ED5D518-30 G 19 XMT PSU2 DF2(UN592) FOR PSU2 AND TSIU4-2 SEE TBL N6 FOR PORT ASSIGNMENTS FOR PSU2 AND TSIU4 SEE TBL N7 FOR PORT ASSIGNMENTS SEE FIG Z OR Z1
637	17 |	1	JL111	105435309	X-DIM	SM// SMC // TSIU4 OR TSIU4-2	/ /- / /	RX	R	4-0	SD5D196-01 SD5D196-02		SM// LTP // PSU2//	/ /- / /	/ /	L	SEE TBL BX-6	SD5D523-01			1	66 84	FORM PER ED5D518-30 G 20 REC PSU2 DF2(UN592) FOR PSU2 AND TSIU4-2 SEE TBL N6 FOR PORT ASSIGNMENTS FOR PSU2 AND TSIU4 SEE TBL N7 FOR PORT ASSIGNMENTS SEE FIG Z OR Z1

COPYRIGHT @ 2001 LUCENT TECHNOLOGIES
ALL RIGHTS RESERVED

BT13

INTERCABINET CABLING
FOR
5ESS * SWITCH
*LUCENT TRADEMARK

DWG SIZE C2 | ISSUE 117

LUCENT TECHNOLOGIES INC | ED5D500-21 | SHEET A56 OF 292

PRINTED IN U.S.A.

CONNECTORIZED CABLING

ITEM	LIST OR GROUP	NBR RECD	CABLE IDENT	CABLE CODE	B DIM	FROM							TO							ROUTE	SHLD	NOTE	REMARKS
						FRAME OR UNIT	EQL	TERM	POS	DROP LGTH	WIRING DIAGRAM	FIGURE	FRAME OR UNIT	EQL	TERM	POS	DROP LGTH	WIRING DIAGRAM	FIGURE				
638	17 |	1	JL113A	105435291	X-DIM	SM// SMC // TSIU4 OR TSIU4-2	/ /- / /	TX	R	4-0	SD5D196-01 SD5D196-02		SM// LTP // PSU2//	/ /- / /	/ /	L	SEE TBL BX-6	SD5D523-01			1	66 84	FORM PER ED5D518-30 G 19 XMT PSU2 DF2(UN592) FOR PSU2 AND TSIU4-2 SEE TBL N6 FOR PORT ASSIGNMENTS FOR PSU2 AND TSIU4 SEE TBL N7 FOR PORT ASSIGNMENTS SEE FIG Z OR Z1
639	17 |	1	JL111A	105435309	X-DIM	SM// SMC // TSIU4 OR TSIU4-2	/ /- / /	RX	R	4-0	SD5D196-01 SD5D196-02		SM// LTP // PSU2//	/ /- / /	/ /	L	SEE TBL BX-6	SD5D523-01			1	66 84	FORM PER ED5D518-30 G 20 REC PSU2 DF2(UN592) FOR PSU2 AND TSIU4-2 SEE TBL N6 FOR PORT ASSIGNMENTS FOR PSU2 AND TSIU4 SEE TBL N7 FOR PORT ASSIGNMENTS SEE FIG Z OR Z1
664	18A	1*	JR351A	750A	X-DIM	SM( ) LTP/ / SMC1 DLTU-E / /	( )- ( ) SEE TBL BZ1	116	L	SEE TBL BZ1	SD-5X204-01		CM2 CMCU/ /	528- ( ) SEE TBL BZ	( ) SEE TBL BZ	R	SEE TBL BZ	SD-5D140-01			3	85	FORM PER ED5D503-30 G351A *ONE CABLE PER REF (REF 1-8) MAX LENGTH 460 FEET.
665	18A	1*	JR353A	750A	X-DIM	SM( ) LTP/ / SMC1 DLTU-E / /	( )- ( ) SEE TBL BZ1	113	L	SEE TBL BZ1	SD-5X204-01		CM2 CMCU/ /	628- ( ) SEE TBL BZ	( ) SEE TBL BZ	R	SEE TBL BZ	SD-5D140-01			3	85	FORM PER ED5D503-30 G353A *ONE CABLE PER REF (REF 1-8) MAX LENGTH 460 FEET.
666	18B	1*	JR351B	750A	X-DIM	SM( ) LTP/ / SMC1 DLTU-E / /	( )- ( ) SEE TBL BZ1A	115	L	SEE TBL BZ1A	SD-5X204-01		CM2 CMCU/ /	528- ( ) SEE TBL BZ	( ) SEE TBL BZ	R	SEE TBL BZ	SD-5D140-01			3		FORM PER ED5D503-30 G351B *ONE CABLE PER REF (REF 1-8) MAX LENGTH 460 FEET.
667	18B	1*	JR353B	750A	X-DIM	SM( ) LTP/ / SMC1 DLTU-E / /	( )- ( ) SEE TBL BZ1A	103	L	SEE TBL BZ1A	SD-5X204-01		CM2 CMCU/ /	628- ( ) SEE TBL BZ	( ) SEE TBL BZ	R	SEE TBL BZ	SD-5D140-01			3		FORM PER ED5D503-30 G353B *ONE CABLE PER REF (REF 1-8) MAX LENGTH 460 FEET.
668	19	1*	JR371	750A	X-DIM	SM( ) LTP/ / SMC1 DLTU-3 / /	( )- ( ) SEE TBL BZ2	300	L	SEE TBL BZ2	SD-5X501-01		CM2 CMCU/ /	528- ( ) SEE TBL BZ	( ) SEE TBL BZ	R	SEE TBL BZ	SD-5D140-01			3		FORM PER ED5D503-30 G 371 *ONE CABLE PER REF (REF 1-4) MAX LENGTH 460 FEET.
669	19	1*	JR373	750A	X-DIM	SM( ) LTP/ / SMC1 DLTU-3 / /	( )- ( ) SEE TBL BZ2	100	L	SEE TBL BZ2	SD-5X501-01		CM2 CMCU/ /	628- ( ) SEE TBL BZ	( ) SEE TBL BZ	R	SEE TBL BZ	SD-5D140-01			3		FORM PER ED5D503-30 G 373 *ONE CABLE PER REF (REF 1-4) MAX LENGTH 460 FEET.
682	20A	1	JV171	811A	X-DIM	3B20D PCCA /BAY 0/ ------- 3B21D CSPC	( )- ( ) ( ) ( )- ( ) ( ) ( ) ( )- ( ) SEE TBL DC5	( ) ( ) ( ) ( ) SEE TBL DC5	R	3B20 5-3 /R/ 6-0 /P/ ---- 3B21 /R/ /P/	SD-4C119-01		DF								3		FORM PER ED5D505-30 G 171 SD POINTS 0 & 1 PC01 SD POINTS 8 & 9 PC01 SD POINTS 16 & 17 PC01 SD POINTS 24 & 25 PC01

COPYRIGHT @ 2001 LUCENT TECHNOLOGIES
ALL RIGHTS RESERVED

BT13

INTERCABINET CABLING
FOR
5ESS * SWITCH
*LUCENT TRADEMARK

DWG SIZE C2 | ISSUE 117

PRINTED IN U.S.A.

CONNECTORIZED CABLING

ITEM	LIST OR GROUP	NBR RECD	CABLE IDENT	CABLE CODE	B DIM	FROM							TO							ROUTE	SHLD	NOTE	REMARKS
						FRAME OR UNIT	EQL	TERM	POS	DROP LGTH	WIRING DIAGRAM	FIGURE	FRAME OR UNIT	EQL	TERM	POS	DROP LGTH	WIRING DIAGRAM	FIGURE				
683	20A	1	JV173	811A	X-DIM	3B20D PCCA /BAY 1/ ------- 3B21D CSPC	( )- ( ) ( )- ( ) ( )- ( ) ( )- ( ) SEE TBL DC5	( ) ( ) ( ) ( ) SEE TBL DC5	R	3B20 5-3 /R/ 6-0 /P/ ---- 3B21 /R/ /P/	SD-4C119-01		DF								3		FORM PER ED5D505-30 G 173 SD POINTS 0 & 1 PC01 SD POINTS 8 & 9 PC01 SD POINTS 16 & 17 PC01 SD POINTS 24 & 25 PC01
684	20A	1	JV175	811A	X-DIM	3B20D PCCA /BAY 0/ ------- 3B21D CSPC	( )- ( ) ( )- ( ) ( )- ( ) ( )- ( ) SEE TBL DC5	( ) ( ) ( ) ( ) SEE TBL DC5	R	3B20 5-2 /R/1 5-11 /P/ ---- 3B21 /R/ /P/	SD-4C119-01		DF								3		FORM PER ED5D505-30 G 175 SD POINTS 4 & 5 PC01 SD POINTS 12 & 13 PC01 SD POINTS 20 & 21 PC01 SD POINTS 28 & 29 PC01
685	20A	1	JV177	811A	X-DIM	3B20D PCCA /BAY 1/ ------- 3B21D CSPC	( )- ( ) ( )- ( ) ( )- ( ) ( )- ( ) SEE TBL DC5	( ) ( ) ( ) ( ) SEE TBL DC5	R	3B20 5-2 /R/ 5-11 /P/ ---- 3B21 /R/ /P/	SD-4C119-01		DF								3		FORM PER ED5D505-30 G 177 SD POINTS 4 & 5 PC01 SD POINTS 12 & 13 PC01 SD POINTS 20 & 21 PC01 SD POINTS 28 & 29 PC01
686	20B	1	JV179	811A	X-DIM	3B20D PCCA /BAY 0/ ------- 3B21D CSPC	( )- ( ) ( )- ( ) ( )- ( ) ( )- ( ) SEE TBL DC5	( ) ( ) ( ) ( ) SEE TBL DC5	L	3B20 5-0 /R/ 5-7 /P/ ---- 3B21 /R/ /P/	SD-4C119-01		DF								3		FORM PER ED5D505-30 G 179 SD POINTS 0 & 1 PC11 SD POINTS 8 & 9 PC11 SD POINTS 16 & 17 PC11 SD POINTS 24 & 25 PC11
687	20B	1	JV181	811A	X-DIM	3B20D PCCA /BAY 1/ ------- 3B21D CSPC	( )- ( ) ( )- ( ) ( )- ( ) ( )- ( ) SEE TBL DC5	( ) ( ) ( ) ( ) SEE TBL DC5	L	3B20 5-0 /R/ 5-7 /P/ ---- 3B21 /R/ /P/	SD-4C119-01		DF								3		FORM PER ED5D505-30 G 181 SD POINTS 0 & 1 PC11 SD POINTS 8 & 9 PC11 SD POINTS 16 & 17 PC11 SD POINTS 24 & 25 PC11
688	20B	1	JV183	811A	X-DIM	3B20D PCCA /BAY 0/ ------- 3B21D CSPC	( )- ( ) ( )- ( ) ( )- ( ) ( )- ( ) SEE TBL DC5	( ) ( ) ( ) ( ) SEE TBL DC5	L	3B20 4-11 /R/ 5-6 /P/ ---- 3B21 /R/ /P/	SD-4C119-01		DF								3		FORM PER ED5D505-30 G 183 SD POINTS 4 & 5 PC11 SD POINTS 12 & 13 PC11 SD POINTS 20 & 21 PC11 SD POINTS 28 & 29 PC11

COPYRIGHT @ 2001 LUCENT TECHNOLOGIES
ALL RIGHTS RESERVED

BT13

INTERCABINET CABLING
FOR
5ESS * SWITCH
*LUCENT TRADEMARK

DWG SIZE C2 | ISSUE 117

LUCENT TECHNOLOGIES INC | ED5D500-21 | SHEET A58 OF 292

PRINTED IN U.S.A.

CONNECTORIZED CABLING

ITEM	LIST OR GROUP	NBR RECD	CABLE IDENT	CABLE CODE	B DIM	FROM							TO							ROUTE	SHLD	NOTE	REMARKS
						FRAME OR UNIT	EQL	TERM	POS	DROP LGTH	WIRING DIAGRAM	FIGURE	FRAME OR UNIT	EQL	TERM	POS	DROP LGTH	WIRING DIAGRAM	FIGURE				
689	20B	1	JV185	811A	X-DIM	3B20D PCCA /BAY 1/ ------- 3B21D CSPC	( )- ( ) ( )- ( ) ( )- ( ) ( )- ( ) SEE TBL DC5	( ) ( ) ( ) ( ) SEE TBL DC5	L	3B20 4-11 /R/ 5-6 /P/ ---- 3B21 /R/ /P/	SD-4C119-01		DF								3		FORM PER ED5D505-30 G 185 SD POINTS 4 & 5 PC11 SD POINTS 12 & 13 PC11 SD POINTS 20 & 21 PC11 SD POINTS 28 & 29 PC11
690	20C	1	JV179	811A	X-DIM	3B20D PCCA /BAY 0/ ------- 3B21D CSPC	( )- ( ) ( )- ( ) ( )- ( ) ( )- ( ) SEE TBL DC5	( ) ( ) ( ) ( ) SEE TBL DC5	L	3B20 5-0 /R/ 5-7 /P/ ---- 3B21 /R/ /P/	SD-4C119-01		DF								3		FORM PER ED5D505-30 G 179 SD POINTS 0 & 1 PC11 SD POINTS 8 & 9 PC11 SD POINTS 16 & 17 PC11 SD POINTS 24 & 25 PC11
691	20C	1	JV181	811A	X-DIM	3B20D PCCA /BAY 1/ ------- 3B21D CSPC	( )- ( ) ( )- ( ) ( )- ( ) ( )- ( ) SEE TBL DC5	( ) ( ) ( ) ( ) SEE TBL DC5	L	3B20 5-0 /R/ 5-7 /P/ ---- 3B21 /R/ /P/	SD-4C119-01		DF								3		FORM PER ED5D505-30 G 181 SD POINTS 0 & 1 PC11 SD POINTS 8 & 9 PC11 SD POINTS 16 & 17 PC11 SD POINTS 24 & 25 PC11
692	20C	1	JV183A	811A	X-DIM	3B20D PCCA /BAY 0/ ------- 3B21D CSPC	( )- ( ) ( )- ( ) ( )- ( ) ( )- ( ) SEE TBL DC5	( ) ( ) ( ) ( ) SEE TBL DC5	L	3B20 4-11 /R/ 5-6 /P/ ---- 3B21 /R/ /P/	SD-4C119-01		DF								3		FORM PER ED5D505-30 G183A SD POINTS 4 & 5 PC11 SD POINTS 12 & 13 PC11 SD POINTS 20 & 21 PC11
693	20C	1	JV185A	811A	X-DIM	3B20D PCCA /BAY 1/ ------- 3B21D CSPC	( )- ( ) ( )- ( ) ( )- ( ) ( )- ( ) SEE TBL DC5	( ) ( ) ( ) ( ) SEE TBL DC5	L	3B20 4-11 /R/ 5-6 /P/ ---- 3B21 /R/ /P/	SD-4C119-01		DF								3		FORM PER ED5D505-30 G185A SD POINTS 4 & 5 PC11 SD POINTS 12 & 13 PC11 SD POINTS 20 & 21 PC11
700	22	1	JV10	810A	X-DIM	M/ / RES PNL /0-3/	/ /- 008 THRU 178 SEE RMKS	100 113 PER EQL	L	SEE TBL BN	SD-5D130-01		DF		CONN 711 89M BK						3	90	FORM PER ED5D505-30 G 10 CABLE ASSEMBLY CONNS OF 64 CONN OF 963 TYPE, USING 2 CONN PER HORIZ EQL AT 008,013,018, 028,033,038,043,048,055,058,063,068,073,078, 083,088,098,103,108,113,118,123,126,138,143, 148,153,158,163,168,173 & 178. (UNIT POS PER JOB SPEC). NO STAMPING IS REQUIRED. /89M TYPE DF BLK ONLY.

COPYRIGHT @ 2001 LUCENT TECHNOLOGIES
ALL RIGHTS RESERVED

BT13

INTERCABINET CABLING
FOR
5ESS * SWITCH
*LUCENT TRADEMARK

DWG SIZE C2 | ISSUE 117

PRINTED IN U.S.A.

CONNECTORIZED CABLING

ITEM	LIST OR GROUP	NBR RECD	CABLE IDENT	CABLE CODE	B DIM	FROM							TO							ROUTE	SHLD	NOTE	REMARKS
						FRAME OR UNIT	EQL	TERM	POS	DROP LGTH	WIRING DIAGRAM	FIGURE	FRAME OR UNIT	EQL	TERM	POS	DROP LGTH	WIRING DIAGRAM	FIGURE				
710	22B	1	JV10B	810A	X-DIM	M/ / RES PNL /0-3/	/ /- 008 THRU 178 SEE RMKS	100 113 PER EQL	L	SEE TBL BN	SD-5D130-01		DF		TRW CONN 89M BLK						3	90	FORM PER ED5D505-30 G 10B CABLE ASSEMBLY CONNS OF 64 CONN OF 963 TYPE, USING 2 CONN PER HORIZ EQL AT 008,013,018, 028,033,038,043,048,053,058,063,068,073,078, 083,088,098,103,108,113,118,123,128,136,143, 148,153,158,163,168,173 & 178. (UNIT POS PER JOB SPEC). NO STAMPING IS REQUIRED. /89M DF BLK ONLY.
750	23	1	JV11	810A	X-DIM	M/ / RES PNL /0-3/	/ /- 008 THRU 178 SEE RMKS	100 113 PER EQL	L	SEE TBL BN	SD-5D130-01		DF		CONN 711						3	90	FORM PER ED5D505-30 G 11 CABLE ASSEMBLY CONNS OF 64 CONN OF 982 TYPE, USING 2 CONN PER HORIZ EQL AT 008,013,018, 028,033,038,043,048,053,058,063,068,073,078, 083,088,098,103,108,113,118,123,128,138,143, 148,153,158,163,168,173 & 178. (UNIT POS PER JOB SPEC). NO STAMPING IS REQUIRED.
760	23A	1	JV11A	810A	X-DIM	M/ / RES PNL /0-3/	/ /- 008 THRU 178 SEE RMKS	100 113 PER EQL	L	SEE TBL BN	SD-5D130-01		DF		SWC						3	90	FORM PER ED5D505-35 G 11A CABLE ASSEMBLY CONNS OF 64 CONN OF 982 TYPE, USING 2 CONN PER HORIZ EQL AT 008,013,018, 028,033,038,043,048,053,058,063,068,073,078, 083,088,098,103,108,113,118,123,128,138,143, 148,153,158,163,168,173 & 178. (UNIT POS PER JOB SPEC). NO STAMPING IS REQUIRED.
770	24	1	JV125	812A	X-DIM	PCFD ( ) OR GPDF ( )	068-030	100	L	1-0 /R/ 7-8 /P/			DF								3		
775	24A	1	JV126	812A	X-DIM	M// PD CNTR PNL ------- PD ALARM PNL	( )- ( )	( )	L	PDCP 7-0 /R/ 4-6 ---- PDAP 2-0 /R/ 8-0 /P/	SD5D130-01		DF								3	199	BULK CABLE FOR POWER DISTRIBUTION CONTROL PANEL (PCDP) ED83024-30 G2, EQUIPPED AT 23-060. OR FOR POWER DISTRIBUTION ALARM PANEL (PDAP) ED83133-30 G4, EQUIPPED AT 62-010. SEE MISC TABLE T
780	27	1	JV5	808A	X-DIM	M / / 13A REC ANN OR 13A+ REC ANN	/ / SEE RMKS		L	SEE RMKS	SD-5D130-01		DF		CONN						3		FORM PER ED5D505-30 G 5 SPECIFY EQL 127 FOR FIRST 13A OR 13A+ RA = 6-10/R/,6-8/P/ SPECIFY EQL 137 FOR SECOND 13A OR 13A+ RA = 6-0/R/,7-6/P/ SPECIFY EQL 147 FOR THIRD 13A OR 13A+ RA = 5-2/R/,8-4/P/ SPECIFY EQL 157 FOR FOURTH 13A OR 13A+ RA = 4-4/R/,9-2/P/ SPECIFY EQL 053 FOR RSM 13A OR 13A+ RA = 4-8/R/,8-10/P/
790	27A	1	JV5A	808A	X-DIM	M / / 13A REC ANN OR 13A+ REC ANN	/ / SEE RMKS		L	SEE RMKS	SD-5D130-01		DF								3	199 59	BULK CABLE SPECIFY EQL 127 FOR FIRST 13A OR 13A+ RA = 6-10/R/,6-8/P/ SPECIFY EQL 137 FOR SECOND 13A OR 13A+ RA = 6-0/R/,7-6/P/ SPECIFY EQL 147 FOR THIRD 13A OR 13A+ RA = 5-2/R/,8-4/P/ SPECIFY EQL 157 FOR FOURTH 13A OR 13A+ RA = 4-4/R/,9-2/P/ SPECIFY EQL 053 FOR RSM 13A OR 13A+ RA = 4-8/R/,8-10/P/ SEE MISC TABLE T
800	28	1	JV225	811A	X-DIM	M// 14A REC ANN	//		L	7-0	SD-5D130-01		DF								3	199 59	BULK CABLE SEE MISC TABLE T
810	28A	1	JV226	812A	X-DIM	M// 14A REC ANN	//		L	7-0	SD-5D130-01		DF								3	59	BULK CABLE
815	28B	1	JV227	A25W	X-DIM	M// 15A REC ANN	//	JP1	L	7-0	SD-5D130-01		DF								3	199 82	SEE MISC TABLE T

COPYRIGHT @ 2001 LUCENT TECHNOLOGIES
ALL RIGHTS RESERVED

BT13

INTERCABINET CABLING
FOR
5ESS * SWITCH
*LUCENT TRADEMARK

DWG SIZE C2 | ISSUE 117

PRINTED IN U.S.A.

CONNECTORIZED CABLING

ITEM	LIST OR GROUP	NBR RECD	CABLE IDENT	CABLE CODE	B DIM	FROM							TO							ROUTE	SHLD	NOTE	REMARKS
						FRAME OR UNIT	EQL	TERM	POS	DROP LGTH	WIRING DIAGRAM	FIGURE	FRAME OR UNIT	EQL	TERM	POS	DROP LGTH	WIRING DIAGRAM	FIGURE				
817	28C	1	JX137	812A	X-DIM	M// 15A REC ANNC	//	J2	L	7-0	SD-5D130-01		DF								3		
819	28D	1	JX138	812A	X-DIM	M// 16A REC ANNC	/ /	J2	L	7-0	SD5D130-01		R.R CONC OR ANALOG LINE								3		
820	28D	1	JX139	812A	X-DIM	M// 16A REC ANNC	/ /	J3	L	7-0	SD5D130-01		R.R CONC OR ANALOG LINE								3		
822	28D	1	JX140	812A	X-DIM	M// 16A REC ANNC	/ /	J4	L	7-0	SD5D130-01		R.R CONC OR ANALOG LINE								3		
824	28E	1	JV228E	750A	X-DIM	M/ / 16A REC ANNC	/ /		L	7-0	SD5D130-01		DSX								3	19959	BULK CABLE SEE MISC TABLE T
825	28E	1	JV228D	820AS	X-DIM	M/ / 16A REC ANNC	/ /		L	7-0	SD5D130-01		DF								3	19959	BULK CABLE SEE MISC TABLE T
828	29	1	JV163	812A	X-DIM	M( ) INVR 20816 L1A	TB5 TB4	2&3 1&2	L	5-4 /R/ 5-3 /P/	SD-5D130-01		DF								3		FORM PER ED5D505-30 G 163 (SC POINTS 29 & 31)
830	29A	1	JV163A	812A	X-DIM	M() INVR /SUCC/ 20816 L1A	TB4 TB5	1&2 2&3	L	5-4 /R/ 5-3 /P/	SD-5D130-01		DF								3		FORM PER ED5D505-30 G163A (ALARM CABLE, TWO SCAN POINTS SHALL BE ASSND PER JOB SPEC).
840	29A	1	JV164	WP93746L1*	X-DIM	M/ / INVR /SUCC/ 20816 L1A	/TB5/	7	L	5-4 /R/ 5-3 /P/	SD-5D130-01		M00 CONV UNIT	045- 157	TS 2	L	5-1 /R/ 7-1 /P/	SD-5D130-01			4		FORM PER ED5D505-30 G 164 *WP93746L1 16GA STRD R SGL (-48VABS CABLE). NO STAMPING REQUIRED
845	29B	1	JV163B	812A	X-DIM	M( ) INVR	TB3	1,2, 3,4	L	5-4 /R/ 5-3 /P/	SD-5D130-01		DF								3	19959	BULK CABLE (ALARM CABLE, TWO SCAN POINTS SHALL BE ASSIGNED PER JOB SPEC) SEE MISC TABLE T
850	30	1	JV165	812A	X-DIM	M 00 ESM	038-161	/TS/ /B/	L	6-0 /R/ 6-9 /P/	SD-5D130-01		DF								3	19959	BULK CABLE SEE MISC TABLE T
860	31	1	JV167	812A	X-DIM	M 00 ESM	038- 161	/TS/ /B/	L	6-0 /R/ 6-9 /P/	SD-5D130-01		3B20D PCCA 0 /BAY0/ ------- 3B21D CSPC	( )- ( ) SEE RMK	( ) SEE RMK	L	3B20 5-0 /R/ 5-8 /P/ ---- 3B21 /R/ - /P/				3		FORM PER ED5D505-30 G 167 A) STAMPING WHEN TMS/MSG IS PROVIDED (SC46,47 ON PC10) 033-069-054 (3B20D)PCCA OR 019-137-054 (3B21D)CSPC B) STAMPING WHEN CM2 IS PROVIDED (SC34,35 ON PC13) 033-038-154 (3B20D)PCCA OR 019-154-154 (3B21D)CSPC C) STAMPING WHEN CM2C/CDX (IOP0) IS PROVIDED(SC 36,37 ON PC02) 028-110-341 (3B21D)CSPC

COPYRIGHT @ 2001 LUCENT TECHNOLOGIES
ALL RIGHTS RESERVED

BT13

INTERCABINET CABLING
FOR
5ESS * SWITCH
*LUCENT TRADEMARK

DWG SIZE C2 | ISSUE 117

PRINTED IN U.S.A.

CONNECTORIZED CABLING

ITEM	LIST OR GROUP	NBR RECD	CABLE IDENT	CABLE CODE	B DIM	FROM							TO							ROUTE	SHLD	NOTE	REMARKS
						FRAME OR UNIT	EQL	TERM	POS	DROP LGTH	WIRING DIAGRAM	FIGURE	FRAME OR UNIT	EQL	TERM	POS	DROP LGTH	WIRING DIAGRAM	FIGURE				
865	31	1	JV169	812A	X-DIM	M 00 ESM	038- 161	/TS/ /B/	L	6-0 /R/ 6-9 /P/	SD-5D130-01		3B20D PCCA 1 /BAY1/ ------- 3B21D CSPC	( )- ( ) SEE RMK	( ) SEE RMK	L	3B20 5-0 /R/ 5-8 /P/ ---- 3B21 /R/ - /P/				3		FORM PER ED5D505-30 G 169 A) STAMPING WHEN TMS/MSG IS PROVIDED (SC46,47 ON PC10) 133-069-054 (3B20D)PCCA OR 045-137-054 (3B21D)CSPC B) STAMPING WHEN CM2 IS PROVIDED (SC34,35 ON PC13) 133-038-154 (3B20D)PCCA OR 045-154-154 (3B21D)CSPC C) STAMPING WHEN CM2C/CDX (IOP1) IS PROVIDED(SC 36,37 ON PC02) 053-110-341
866	32	1	JX105A	808A	X-DIM	M() LAU	(*)- 072 080 088 096 104 112 120 128 136 144 152 160 168 176	151 PER EQL	L	SEE TBL BN1	SD5D130-01		DF								3		FORM PER ED5D621-35 G105A *FOR API APPL LAU IS DEDICATED IN VERT POS 19. (DROP DIM 7-2 FOR CA RACKS 5-2 FOR PALLETIZED VERSION).
867	33	1	JX123	812A	X-DIM	M() LAU	( )- ( ) SEE TBL BN1	145	R	SEE TBL BN1	SD5D130-01		DS( )	( )- ( )				SD5D071-01			3		FORM PER ED5D621-35 G 123 MAX LENGTH 50 FEET.
868	34	1	JV231	812A	X-DIM	M() FAN UNIT	( )- 011	700 /J7/	L	5-10 /R/ 3-1 /P/	SD5D130-01		DF								3		
869	34	1	JV232	812A	X-DIM	M() FAN UNIT	( )- 011	800 /J8/	L	5-10 /R/ 3-1 /P/	SD5D130-01		DF								3		
875	34A	1	JV233	812A	X-DIM	M( ) FAN UNIT OR DS( ) FAN UNIT	( )- 011	100 /J1/	L	5-10 /R/ 3-1 /P/	SD-5D130-01		M( ) FAN UNIT OR DS( ) FAN UNIT	( )- 011	400 /J4/						3		FORM PER ED5D505-30 G 233 FAN ALARM MULT FROM SUCC (HIGHER NBD) MISC CABINET TO PREC (LOWER NBD) MISC CAB. NOTE:SUCC AND PREC FANS ARE J5D003BE OR FAN ALARM MULT FROM SUCC (HIGHED NBD) DATA SET CABINET TO PREC (LOWER NBD) DATA SET CABINET. NOTE: FAN MULTS BETWEEN MISC CABINETS AND DATA SET CABINETS ARE NOT TO BE COMBINED AS ONE.
876	34CE	1	JV230	812A	X-DIM	M( ) FAN UNIT	( )- 011 ( )- 011	700 /J7/ 800 /J8/	L	5-10 /R/ 3-1 /P/	SD5D130-01		DF								3		
877	34CF	1	JV234	812A	X-DIM	M( ) FAN UNIT OR DS( ) FAN UNIT OR ( )	( )- 011	700 /J7/	L		SD-53130-01		3B20D PCCA 0 ------- 3B21D CSPC	( )- { } SEE TBL DC5	( ) SEE TBL DC5						3		

COPYRIGHT @ 2001 LUCENT TECHNOLOGIES
ALL RIGHTS RESERVED

BT13

INTERCABINET CABLING
FOR
5ESS * SWITCH
*LUCENT TRADEMARK

DWG SIZE C2 | ISSUE 117

LUCENT TECHNOLOGIES INC | ED5D500-21 | SHEET A62 OF 292

PRINTED IN U.S.A.

CONNECTORIZED CABLING

ITEM	LIST OR GROUP	NBR RECD	CABLE IDENT	CABLE CODE	B DIM	FROM							TO							ROUTE	SHLD	NOTE	REMARKS
						FRAME OR UNIT	EQL	TERM	POS	DROP LGTH	WIRING DIAGRAM	FIGURE	FRAME OR UNIT	EQL	TERM	POS	DROP LGTH	WIRING DIAGRAM	FIGURE				
878	34CF	1	JV235	812A	X-DIM	M( ) FAN UNIT OR DS( ) FAN UNIT OR ( )	( )- 011	800 /J8/	L		SD-5D130-01		3B20D PCCA 1 ------- 3B21D CSPC	( )- ( ) SEE TBL DC5	( ) SEE TBL DC5						3		
879	35	1	JV19	801A	X-DIM	M 00 OFF ALM UNIT	051- 052	113 132	L	3-11 /R/ 6-6 /P/	SD-5D130-01		DF								3		
880	35	1	JV21	801A	X-DIM	M 00 OFF ALM UNIT	051- 052 051- 072	145 113	L	4-2 /R/ 6-8 /P/	SD-5D130-01		DF								3		
881	34B	1	JV242	812A	X-DIM	M( ) FAN UNIT OR DS( ) FAN UNIT	( )- 011 OR ( )- 011	400 /J4/ 500 /J5/	L	5-10 /R/ 3-1 /P/	SD-5D130-01		M( ) FAN UNIT OR DS( ) FAN UNIT	( )- 011 OR ( )- 011	500 /J5/ 400 /J4/						3		FORM PER ED5D505-30 G 242 FAN ALARM MULT FROM SUCC (HIGHER NBD) MISC CABINET OR PREC (LOWER NBD) MISC CABINET TO SUCC/PREC (HIGHER NBD/LOWER NBD) MISC CABINET. (J4 OR J5 FROM A 3FH FAN TO J5 OR J4 OF ANY OTHER 3FH FAN). NOTE:PRECEDING FAN CAN BE EITHER J5D003FH(TERM J5 OR J4) OR J5D003BE(TERM J4 ONLY) OR FAN ALARM MULT FROM SUCC (HIGHED NBD) DATA SET CABINET OR PREC (LOWER NBD) DATA SET CABINET TO SUCC/PREC(HIGHER NBD/LOWER NBD) MISC CABINET. NOTE: FAN MULTS BETWEEN MISC CABINETS AND DATA SET CABINETS ARE NOT TO BE COMBINED AS ONE.
882	34C	1	JV243	812A	X-DIM	M( ) FAN UNIT	( )- 011 ( )- 011	200 /J2/ 300 /J3/	L	5-10 /R/ 3-1 /P/	SD5D130-01		DF								3		
890	35	1	JV23	801A	X-DIM	M 00 OFF ALM UNIT	051- 072	132 145	L	4-5 /R/ 6-9 /P/	SD-5D130-01		DF								3		
891	34D	1	JV244	812A	X-DIM	M( ) FAN UNIT OR DS( ) FAN UNIT OR ( )	( )- 011	200 /J2/	L		SD-53130-01		3B20D PCCA 0 ------- 3B21D CSPC	( )- ( ) SEE TBL DC5	( ) SEE TBL DC5						3		
892	34D	1	JV245	812A	X-DIM	M( ) FAN UNIT OR DS( ) FAN UNIT OR ( )	( )- 011	300 /J3/	L		SD-5D130-01		3B20D PCCA 1 ------- 3B21D CSPC	( )- ( ) SEE TBL DC5	( ) SEE TBL DC5						3		
897	35	1	JV19	801A	X-DIM	M 00 OFF ALM UNIT	051- 052	113 132	L	3-11 /R/ 6-6 /P/	SD-5D130-01		DF								3		
898	35	1	JV21	801A	X-DIM	M 00 OFF ALM UNIT	051- 052 051- 072	145 113	L	4-2 /R/ 6-8 /P/	SD-5D130-01		DF								3		

COPYRIGHT @ 2001 LUCENT TECHNOLOGIES
ALL RIGHTS RESERVED

BT13

INTERCABINET CABLING
FOR
5ESS * SWITCH
*LUCENT TRADEMARK

DWG SIZE C2 | ISSUE 117

LUCENT TECHNOLOGIES INC | ED5D500-21 | SHEET A63 OF 292

PRINTED IN U.S.A.

CONNECTORIZED CABLING

ITEM	LIST OR GROUP	NBR RECD	CABLE IDENT	CABLE CODE	B DIM	FROM							TO							ROUTE	SHLD	NOTE	REMARKS
						FRAME OR UNIT	EQL	TERM	POS	DROP LGTH	WIRING DIAGRAM	FIGURE	FRAME OR UNIT	EQL	TERM	POS	DROP LGTH	WIRING DIAGRAM	FIGURE				
899	35	1	JV23	801A	X-DIM	M 00 OFF ALM UNIT	051-072	132 145	L	4-5 /R/ 6-9 /P/	SD-5D130-01		DF								3		
900	35	1	JV71	812A	X-DIM	M 00 OFF ALM	051-028	353	L	4-8 /R/ 6-8 /P/	SD-5D130-01		PCCA BAY 1	133-086 133-086 133-093	346 546 046	L	5-0 /R/ 5-11 /P/	SD-4C119-01			3	71	
910	35	1	JV73	816A	X-DIM	M 00 OFF ALM UNIT	051-063	000	L	4-2 /R/ 6-3 /P/	SD-5D130-01		PCCA BAY 0	033-094	135	R	5-6 /R/ 6-0 /P/	SD-4C119-01			3		
920	35	1	JV75	816A	X-DIM	M 00 OFF ALM UNIT	051-063	006	L	4-3 /R/ 6-3 /P/	SD-5D130-01		PCCA BAY 0	033-094	148	R	5-6 /R/ 5/11 /P/	SD-4C119-01			3		
930	35	1	JV77	816A	X-DIM	M 00 OFF ALM UNIT	051-063	013	L	4-4 /R/ 6-7 /P/	SD-5D130-01		PCCA BAY 0	033-094	335	R	5-6 /R/ 6-0 /P/	SD-4C119-01			3		
940	35	1	JV79	816A	X-DIM	M 00 OFF ALM UNIT	051-063	019	L	4-4 /R/ 6-7 /P/	SD-5D130-01		PCCA BAY 0	033-094	348	R	5-6 /R/ 5-11 /P/	SD-4C119-01			3		
950	35	1	JV81	816A	X-DIM	M 00 OFF ALM UNIT	051-063	032	L	3-10 /R/ 6-7 /P/	SD-5D130-01		PCCA BAY 0	033-094	535	R	5-6 /R/ 6-0 /P/	SD-4C119-01			3		
960	35	1	JV83	816A	X-DIM	M 00 OFF ALM UNIT	051-063	038	L	3-11 /R/ 6-7 /P/	SD-5D130-01		PCCA BAY 0	033-094	548	R	5-6 /R/ 5-11 /P/	SD-4C119-01			3		
970	35	1	JV85	816A	X-DIM	M 00 OFF ALM UNIT	051-063	045	L	4-0 /R/ 7-0 /P/	SD-5D130-01		PCCA BAY 0	033-101	035	R	5-5 /R/ 5-11 /P/	SD-4C119-01			3		
980	35	1	JV87	816A	X-DIM	M 00 OFF ALM UNIT	051-063	051	L	4-0 /R/ 7-0 /P/	SD-5D130-01		PCCA BAY 0	033-101	048	R	5-5 /R/ 5-10 /P/	SD-4C119-01			3		
1000	35	1	JV89	816A	X-DIM	M 00 OFF ALM	051-065	000	L	4-2 /R/ 6-3 /P/	SD-5D130-01		PCCA BAY 1	133-094	135	R	5-6 /R/ 6-0 /P/	SD-4C119-01			3		
1010	35	1	JV91	816A	X-DIM	M 00 OFF ALM	051-065	006	L	4-3 /R/ 6-3 /P/	SD-5D130-01		PCCA BAY 1	133-094	148	R	5-6 /R/ 5-11 /P/	SD-4C119-01			3		
1020	35	1	JV93	816A	X-DIM	M 00 OFF ALM UNIT	051-065	013	L	4-10 /R/ 6-7 /P/	SD-5D130-01		PCCA BAY 1	133-094	335	R	5-6 /R/ 6-0 /P/	SD-4C119-01			3		
1030	35	1	JV95	816A	X-DIM	M 00 OFF ALM UNIT	051-065	019	L	4-10 /R/ 6-7 /P/	SD-5D130-01		PCCA BAY 1	133-094	348	R	5-6 /R/ 5-11 /P/	SD-4C119-01			3		
1040	35	1	JV97	816A	X-DIM	M 00 OFF ALM UNIT	051-065	032	L	3-10 /R/ 6-7 /P/	SD-5D130-01		PCCA BAY 1	133-094	535	R	5-6 /R/ 6-0 /P/	SD-4C119-01			3		

COPYRIGHT @ 2001 LUCENT TECHNOLOGIES
ALL RIGHTS RESERVED

BT13

INTERCABINET CABLING
FOR
5ESS * SWITCH
*LUCENT TRADEMARK

DWG SIZE C2 | ISSUE 117

LUCENT TECHNOLOGIES INC | ED5D500-21 | SHEET A64 OF 292

PRINTED IN U.S.A.

CONNECTORIZED CABLING

ITEM	LIST OR GROUP	NBR RECD	CABLE IDENT	CABLE CODE	B DIM	FROM							TO							ROUTE	SHLD	NOTE	REMARKS
						FRAME OR UNIT	EQL	TERM	POS	DROP LGTH	WIRING DIAGRAM	FIGURE	FRAME OR UNIT	EQL	TERM	POS	DROP LGTH	WIRING DIAGRAM	FIGURE				
1050	35	1	JV99	816A	X-DIM	M 00 OFF ALM UNIT	051-065	038	L	3-11 /R/ 6-7 /P/	SD-5D130-01		PCCA BAY 1	133-094	548	R	5-6 /R/ 5-11 /P/	SD-4C119-01			3		
1060	35	1	JV101	816A	X-DIM	M 00 OFF ALM UNIT	051-065	045	L	4-0 /R/ 7-0 /P/	SD-5D130-01		PCCA BAY 1	133-101	035	R	5-5 /R/ 5-11 /P/	SD-4C119-01			3		
1070	35	1	JV103	816A	X-DIM	M 00 OFF ALM UNIT	051-065	051	L	4-0 /R/ 7-0 /P/	SD-5D130-01		PCCA BAY 1	133-101	048	R	5-5 /R/ 5-10 /P/	SD-4C119-01			3		
1080	35	1	JV105	812A	X-DIM	M 00 OFF ALM UNIT	051-028	132	L	4-8 /R/ 6-3 /P/	SD-5D130-01		PCCA BAY 0	033-086 033-086 033-093	346 546 046	L	5-0 /R/ 5-11 /P/	SD-4C119-01			3	71	
1090	35	1	JV107	812A	X-DIM	M 00 OFF ALM UNIT	051-028	332	L	4-5 /R/ 6-3 /P/	SD-5D130-01		PCCA BAY 0	033-086	541	R	6-2 /R/ 6-1 /P/	SD-4C119-01			3		
1100	35	1	JV109	812A	X-DIM	M 00 OFF ALM UNIT	051-028	335	L	4-5 /R/ 6-3 /P/	SD-5D130-01		PCCA BAY 1	133-086	541	R	6-2 /R/ 6-1 /P/	SD-4C119-01			3		
1110	35	1	JV193	WP93746L1*	X-DIM	M 00 CONV UNIT	045-157	/TS/ /2/	L	5-1 /R/ 7-1 /P/	SD-5D130-01		PWR PLANT	ABS FUSE AND AB RTN							4		FORM PER ED5D505-30 G 193 *WP93746L1 16GA PR, STRD R,R-BK DA
1120	35	1	JV211	812A	X-DIM	M00 OFF ALM UNIT	051-028	106	L	3-6 /R/ 5-11 /P/	SD-5D130-01		PCCA BAY 0	060-178	319	R	2-10 /R/ 6-9 /P/	SD-4C119-01			3		FORM PER ED5D505-30 G 211 (CABLE FOR 3B20D MOD2 OR MOD3 APPLICATION).
1130	35	1	JV212	812A	X-DIM	M00 OFF ALM UNIT	051-028	109	L	3-6 /R/ 5-11 /P/	SD-5D130-01		PCCA BAY 1	160-178	319	R	2-10 /R/ 6-9 /P/	SD-4C119-01			3		FORM PER ED5D505-30 G 212 (CABLE FOR 3B20D MOD2 OR MOD3 APPLICATION).
1150	35A	1	JV215	285A	X-DIM	/M00/ /RAR/	/ /- /177/ AND /161/	/TSA / /TSB /	L	8-0	SD-5D017-01		AUD ALM PNL / / OR AUD/VIS ALARM UNIT					SD-5D017-01			3		FORM PER ED5D505-30 G 215 (NO STAMPING REQUIRED)
1160	35B	1	JV15	285A	X-DIM	M 00 OFF ALM	051-028	313	L	4-11 /R/ 7-1 /P/	SD-5D130-01		AUD ALM PNL / / OR AUD/VIS ALARM UNIT								3		FORM PER ED5D505-30 G 15 (DO NOT USE WHEN RARU PER J5D005C-1,L16 AND LAA IS SPECIFIED FOR AUDIBLE ALARM).

COPYRIGHT @ 2001 LUCENT TECHNOLOGIES
ALL RIGHTS RESERVED

BT13

INTERCABINET CABLING
FOR
5ESS * SWITCH
*LUCENT TRADEMARK

DWG SIZE C2 | ISSUE 117

LUCENT TECHNOLOGIES INC | ED5D500-21 | SHEET A65 OF 292

PRINTED IN U.S.A.

CONNECTORIZED CABLING

ITEM	LIST OR GROUP	NBR RECD	CABLE IDENT	CABLE CODE	B DIM	FROM							TO							ROUTE	SHLD	NOTE	REMARKS
						FRAME OR UNIT	EQL	TERM	POS	DROP LGTH	WIRING DIAGRAM	FIGURE	FRAME OR UNIT	EQL	TERM	POS	DROP LGTH	WIRING DIAGRAM	FIGURE				
1170	35B	1	JV191	WP93746L1*	X-DIM	/M 00/ CONV UNIT	/045/- /157/	/TS/ /2/	L	5-9 /R/ 7-1 /P/	SD-5D130-01		AUD ALM PNL / / OR AUD/VIS ALARM UNIT					SD-5D017-01			4		FORM PER ED5D842-30 G 33 *WP93746L1 16GA STRD, RED,SGL (DO NOT USE WHEN RARU PER J5D005C-1,L16 AND LAA IS SPECIFIED FOR AUDIBLE ALARM). (NO STAMPING REQUIRED) REPL:ED5D505-30,G191
1175	35C	1	JV217	285A	X-DIM	M( ) OAU	051- 102	532	L	4-1 /R/ 7-0 /P/	SD5D130-01		M/ / RARU		TSE TSD TSC		8-0 /R/ 8-0 /P/	SD5D017-01			3		
1176	35CE	1	JV19	801A	X-DIM	M 00 OFF ALM UNIT	/J1/ 051- 052 /J2/ 051- 052	113 132	L	3-11 /R/ 6-6 /P/	SD-5D130-01		DF								3	163	
1177	35CE	1	JV21	801A	X-DIM	M 00 OFF ALM UNIT	051- 052 051- 072	145 113	L	4-2 /R/ 6-8 /P/	SD-5D130-01		DF								3	163	
1178	35CE	1	JV23	801A	X-DIM	M 00 OFF ALM UNIT	051- 072	132 145	L	4-5 /R/ 6-9 /P/	SD-5D130-01		DF								3	163	
1179	35CE	1	JV73A	822A	X-DIM	M 00 OR M( ) OR DSA( ) OR DSC( ) OFF ALM UNIT	051- 063	/J1/ 000 /J2/ 013 /J3/ 032 /J4/ 045	L	3-7 /R/ 6-9 /P/	SD5D130-01		3B20D PCCA BAY 0 ------- 3B21D CSPC OR ECPC OR OMP	( )- ( ) ( )- ( ) SEE TBL DC5	/J5/ ( ) /J6/ ( ) /J7/ ( ) /J8/ ( ) /J9/ ( ) /J 10/ ( ) /J 11/ ( ) /J 12/ ( ) SEE TBL DC5	R	3B20 5-1 /R/ 5-11 /P/ ---- 3B21 /R/ /P/	SD4C119-01			3	163	

COPYRIGHT @ 2001 LUCENT TECHNOLOGIES
ALL RIGHTS RESERVED

BT13

INTERCABINET CABLING
FOR
5ESS * SWITCH
*LUCENT TRADEMARK

DWG SIZE C2 | ISSUE 117

LUCENT TECHNOLOGIES INC | ED5D500-21 | SHEET A66 OF 292

PRINTED IN U.S.A.

CONNECTORIZED CABLING

ITEM	LIST OR GROUP	NBR RECD	CABLE IDENT	CABLE CODE	B DIM	FROM							TO							ROUTE	SHLD	NOTE	REMARKS
						FRAME OR UNIT	EQL	TERM	POS	DROP LGTH	WIRING DIAGRAM	FIGURE	FRAME OR UNIT	EQL	TERM	POS	DROP LGTH	WIRING DIAGRAM	FIGURE				
1180	35CE	1	JV89A	822A	X-DIM	M 00 OR M( ) OR DSA( ) OR DSC( ) OR OFF ALM UNIT	051- 065	000 013 032 045	L	3-8 /R/ 6-10 /P/	SD5D130-01		3B20D PCCA BAY 1 ------- 3B21D CSPC OR ECPC OR OMP	( )- ( ) ( )- ( ) SEE TBL DC5	/J5/ ( ) /J6/ ( ) /J7/ ( ) /J8/ ( ) /J9/ ( ) /J 10/ ( ) ( ) /J 11/ ( ) /J 12/ SEE TBL DC5	R	3B20 5-1 /R/ 5-11 /P/ ---- 3B21 /R/ /P/	SD4C119-01			3	163	
1183	35CE	1	JV193	WP93746L1*	X-DIM	/M 00/ CONV UNIT	/045/- /157/	/TS/ /2/	L	5-1 /R/ 7-1 /P/	SD-5D130-01		PWR PLANT	ABS FUSE AND AB RTN							4	163	FORM PER ED5D842-30 G 38 *WP93746L1 16GA PR, STRD R,R-BK NO STAMPING REQUIRED REPL:ED5D505-30,G193
1184	35CE	1	JV211	812A	X-DIM	M00 OFF ALM UNIT	051- 028	106	L	3-6 /R/ 5-11 /P/	SD-5D130-01		PCCA 0 /BAY 0/ ------- 3B21D CSPC OR ECPC OR OMP	( )- ( ) ------ ( )- ( ) SEE TBL DC5	( ) ---- ( )	R	2-10 /R/ 6-9 /P/ ---- 3B21 /R/ /P/	SD-4C119-01			3	163	FORM PER ED5D505-30 G 211 (CABLE FOR 3B20D MOD2 OR MOD3 APPLICATION).
1185	35CE	1	JV212	812A	X-DIM	M00 OFF ALM UNIT	051- 028	109	L	3-6 /R/ 5-11 /P/	SD-5D130-01		PCCA 1 /BAY 1/ ------- 3B21D CSPC OR ECPC OR OMP	( )- ( ) ------ ( )- ( ) SEE TBL DC5	( ) ---- ( )	R	2-10 /R/ 6-9 /P/ ---- 3B21 /R/ /P/	SD-4C119-01			3	163	FORM PER ED5D505-30 G 212 (CABLE FOR 3B20D MOD2 OR MOD3 APPLICATION).
1187	35CH	1	JV105A	816A	X-DIM	M 00 OFF ALM UNIT	051- 028	132 332	L	4-5 /R/ 6-3 /P/	SD-5D130-01		PCCA BAY 0	033- 086 033- 093	346 546 541 046	R	5-1 /R/ 5-11 /P/	SD-4C119-01			3	163	FORM PER ED5D505-30 G105A TO BE USED WITH 3B20D (PCCA) ONLY
1188	35CH	1	JV109A	816A	X-DIM	M 00 OFF ALM UNIT	051- 028	353 335	L	3-11 /R/ 6-9 /P/	SD-5D130-01		PCCA BAY 1	133- 086 133- 093	346 546 541 046	R	5-1 /R/ 5-11 /P/	SD-4C119-01			3	163	FORM PER ED5D505-30 G109A TO BE USED WITH 3B20D (PCCA) ONLY

COPYRIGHT @ 2001 LUCENT TECHNOLOGIES
ALL RIGHTS RESERVED

BT13

INTERCABINET CABLING
FOR
5ESS * SWITCH
*LUCENT TRADEMARK

DWG SIZE C2 | ISSUE 117

PRINTED IN U.S.A.

CONNECTORIZED CABLING

ITEM	LIST OR GROUP	NBR RECD	CABLE IDENT	CABLE CODE	B DIM	FROM							TO							ROUTE	SHLD	NOTE	REMARKS
						FRAME OR UNIT	EQL	TERM	POS	DROP LGTH	WIRING DIAGRAM	FIGURE	FRAME OR UNIT	EQL	TERM	POS	DROP LGTH	WIRING DIAGRAM	FIGURE				
1190	35CG	1	JV105B	816A	X-DIM	M00 OR M( ) OR DSA( ) OR DSC( ) OR OFF ALM UNIT	051- 028	/J1/ 132 /J2/ 332	L	4-0	SD5D130-01		3B21D CSPC OR ECPC OR OMP	19- 110	/J3/ 345	R	6-6	SD3T011-01			3	163	FORM PER ED5D505-30 G105B TO BE USED WITH 3B21D (CSPC) ONLY
1191	35CG	1	JV109B	816A	X-DIM	M00 OR M( ) OR DSA( ) OR DSC( ) OR OFF ALM UNIT	051- 028	/J1/ 353 /J2/ 335	L	4-0	SD5D130-01		3B21D CSPC OR ECPC OR OMP	45- 110	/J3/ 345	R	4-3	SD3T011-01			3	163	FORM PER ED5D505-30 G109B TO BE USED WITH 3B21D (CSPC) ONLY
1200	36	1	JV13	811A	X-DIM	M 00 OFF ALM UNIT	051- 028	317	L	4-11 /R/ 6-3 /P/	SD-5D130-01		EXIT PILOT LAMP / / OR A/V ALM PANEL / /								3		
1210	36A	1	JV216	812A	X-DIM	MOO RAR	( )- 177 AND 161	TSA TSB	L	8-0	SD-5D017-01		EXIT PILOT LAMP / /					SD-5D017-01			3	199 59	BULK CABLE. NO STAMPING REQUIRED. SEE MISC TABLE T
1215	36C	1	JV218	812A	X-DIM	M( ) OAU	051- 102	518	L	4-1 /R/ 7-0 /P/	SD5D130-01		M/ / RARU		TSE TSD TSC		8-0 /R/ 8-0 /P/	SD5D017-01			3		
1217	36D	1	JV112	812A	X-DIM	M00 OFF ALM UNIT	051- 028	141	L	2-6 /R/ 5-8 /P/	SD-5D130-01		PCCA BAY 0	033- 061	045	L	3-8 /R/ 5-4 /P/	SD-4C119-01			3		FORM PER ED5D505-30 G 112 REQUIRED WHEN 3B20 IS SPECIFIED (SD POINT 29).
1218	36D	1	JV112A	812A	X-DIM	M00 OFF ALM UNIT	051- 028	154	L	2-4 /R/ 5-8 /P/	SD-5D130-01		PCCA BAY 1	133- 061	045	L	3-8 /R/ 5-4 /P/	SD-4C119-01			3		FORM PER ED5D505-30 G112A REQUIRED WHEN 3B20 IS SPECIFIED (SD POINT 29).
1219	36D	1	JV114	812A	X-DIM	M00 OFF ALM UNIT	051- 028	122	L	3-3 /R/ 5-1 /P/	SD-5D130-01		TO CUST ALARM SYSTEM					SD-4C119-01			3		FORM PER ED5D505-30 G 114 REQUIRED WHEN 3B20D/3B21D IS SPECIFIED; CUST. ALM. SYS.
1220	36E	1	JV113	812A	X-DIM	M00 OFF ALM UNIT	051- 028	141	L	2-6 /R/ 5-8 /P/	SD-5D130-01		3B21D CSPC	019- 145	045	R	4-10 /R/ 4-5 /P/	SD-4C119-01			3		FORM PER ED5D505-30 G 113 REQUIRED WHEN 3B21D IS SPECIFIED (PC11,SD POINT 29).
1221	36E	1	JV113A	812A	X-DIM	M00 OFF ALM UNIT	051- 028	154	L	2-4 /R/ 5-8 /P/	SD-5D130-01		3B21D CSPC	045- 145	045	R	2-9 /R/ 5-10 /P/	SD-4C119-01			3		FORM PER ED5D505-30 G113A REQUIRED WHEN 3B21D IS SPECIFIED (PC11,SD POINT 29).

COPYRIGHT @ 2001 LUCENT TECHNOLOGIES
ALL RIGHTS RESERVED

BT13

INTERCABINET CABLING
FOR
5ESS * SWITCH
*LUCENT TRADEMARK

DWG SIZE C2 | ISSUE 117

PRINTED IN U.S.A.

CONNECTORIZED CABLING

ITEM	LIST OR GROUP	NBR RECD	CABLE IDENT	CABLE CODE	B DIM	FROM							TO							ROUTE	SHLD	NOTE	REMARKS
						FRAME OR UNIT	EQL	TERM	POS	DROP LGTH	WIRING DIAGRAM	FIGURE	FRAME OR UNIT	EQL	TERM	POS	DROP LGTH	WIRING DIAGRAM	FIGURE				
1222	36E	1	JV114	812A	X-DIM	M00 OFF ALM UNIT	051- 028	122	L	3-3 /R/ 5-1 /P/	SD-5D130-01		TO CUST ALARM SYSTEM					SD-4C119-01			3		FORM PER ED5D505-30 G 114 REQUIRED WHEN 3B20D/3B21D IS SPECIFIED; CUST. ALM. SYS.
1225	37	1	JN1	816A	X-DIM	( ) I/O UNIT	( )- ( )	( )			T*4C053-12	FIG.1	( ) 201C OR RMK DATA SET	( )- ( )				SD-5D071-01	AS-()		3		FORM PER ED5D517-30 G 1 PARADYNE 9.6 KBPS SYNC
1230	38	1	JN2	816A	X-DIM	PC-( ) IOP( ) OR CSPC	( )- ( ) SEE TBL DC, DC1, DC6	( )	L/R		T*4C052-12	FIG.1	( ) 201C, 2024A DATA SET	( )- ( )		L/R		SD-5D071-01	AS-()		3		FORM PER ED5D517-30 G 2 (MAX 50 FT)
1231	38A	1	(###)	816A	X-DIM	CSPC /PROC0/ OR M( ) OR ( )	19-094	500	L/R		SD3T015-01		DS201C OR 3800 MODEM OR ROP OR 577 PRINTER			L/R		SD3T015-01			3	160 161	FORM PER ED3T076-20 G 51 SERVICE GROUP 0 (UN583 ONLY) (MAX. 200 FT.) (###) CA IDENT TO BE DETERMINDED BY LINE ENGINEERING, SEE TABLE ST
1232	38A	1	(###)	816A	X-DIM	CSPC /PROC1/ OR M( ) OR ( )	45-094	500	L/R		SD3T015-01		DS201C OR 3800 MODEM OR ROP OR 577 PRINTER			L/R		SD3T015-01			3	160 161	FORM PER ED3T076-20 G 51 SERVICE GROUP 1 (UN583 ONLY) (MAX. 200 FT.) (###) CA IDENT TO BE DETERMINDED BY LINE ENGINEERING, SEE TABLE ST.
1233	38B	1	( )	812A	X-DIM	KS23996 LIST 2 TERM OR M( ) OR ( )					SD-5D071-01		572 PRINTER					SD-5D071-01			3	162	FORM PER ED5D621-35 G147B (25 FEET) (SEE NOTE 162)
1240	39	1	JN3	812A	X-DIM	( ) I/O UNIT	( )- ( ) SEE TBL DC, DC1, DC6	( )	L/R		T*4C052-12	FIG.1	( ) 202T	( )- ( )		L/R		SD-5D071-01	AS-()		3		FORM PER ED5D517-30 G 3 UN74 ONLY SEE GROUP 39F FOR UN582.
1241	39A	1	JN19	812A	X-DIM	DS()	( )- ( )		L/R				DF								3	199 59	BULK CABLE RM 3309 GANDALF MODEM OR EQUIV. MOUNTED IN 3000 TYPE RACK. ONE CABLE FOR ONE MODEM. SEE MISC TABLE T
1242	39B	1	JN20	808A	X-DIM	DS()	( )- ( )		L/R				DF								3	199 59	BULK CABLE RM 3309 GANDALF MODEM OR EQUIV. MOUNTED IN 3000 TYPE RACK. ONE CABLE FOR UP TO 14 MODEMS. SEE MISC TABLE T

COPYRIGHT @ 2001 LUCENT TECHNOLOGIES
ALL RIGHTS RESERVED

BT13

INTERCABINET CABLING
FOR
5ESS * SWITCH
*LUCENT TRADEMARK

DWG SIZE C2 | ISSUE 117

PRINTED IN U.S.A.

CONNECTORIZED CABLING

ITEM	LIST OR GROUP	NBR RECD	CABLE IDENT	CABLE CODE	B DIM	FROM							TO							ROUTE	SHLD	NOTE	REMARKS
						FRAME OR UNIT	EQL	TERM	POS	DROP LGTH	WIRING DIAGRAM	FIGURE	FRAME OR UNIT	EQL	TERM	POS	DROP LGTH	WIRING DIAGRAM	FIGURE				
1243	39C	1	JN3A	812A	X-DIM	3B20D ( )- I/O UNIT ------- 3B21D CSPC	( )- ( ) SEE TBL DC DC-1 DC6	( ) SEE TBL DC DC-1 DC6	L/R		SD4C119-01		( ) 3309 GANDALF DS-E	( )- ( )							3		FORM PER ED5D517-30 G 3A TN74B ONLY
1244	39D	1	JN15A	NCA3050	X-DIM	3B20D ( )- I/O UNIT ------- 3B21D CSPC OR ECPC OR OMP	( )- ( ) SEE TBL DC DC-1 DC6	( ) SEE TBL DC DC-1 DC6	L/R		SD4C119-01		( ) 3309 GANDALF DS-E	( )- ( )							3		FORM PER ED5D517-30 G 15A MAX LG 250 FEET TN74B ONLY
1245	39E	1	JN22	812A	X-DIM	3B20D ( ) I/O UNIT ------- 3B21D CSPC OR ECPC OR OMP	( )- ( ) SEE TBL DC DC-1 DC6	( ) SEE TBL DC DC-1 DC6					( )	( )- ( )		L/R					3		FORM PER ED5D517-30 G 22 (AT&T STU-3 SECURE DATA DEVICE,MODEL 1900 ONLY) TN74B ONLY
1246	39F	1	( )	812A	X-DIM	CSPC OR M( ) OR ( )	( ) SEE TBL ST	( ) SEE TBL STA	L/R		SD3T015-01		DS202T OR 3800 MODEM			L/R		SD3T015-01			3	160 161	FORM PER ED3T076-20 G 52 UN582 ONLY (MAX. LG. 50 FEET)
1247	39G	1	( )	1246004C	X-DIM	CSPC PROC OR IOP/SPU GRTH UN	SEE TBL ST	SEE TBL STA	L/		SD3T015-01		DS202T			L/		SD3T015-01			3	160 161	FORM PER ED3T076-20 G 41A UN582 ONLY. (MAX 250 FT.)
1248	39H	1	( )	812A	X-DIM	CSPC PROC OR IOP/SPU GRTH UN	SEE TBL ST	SEE TBL STA	L/R		SD3T015-01		DS3309 GANDALF			L/R		SD3T015-01			3	160 161	FORM PER ED3T076-20 G 53 UN582 ONLY (MAX 50 FT.)
1249	39J	1	( )	408457257	X-DIM	CSPC PROC OR IOP/SPU GRTH UN	SEE TBL ST	SEE TBL STA	L/		SD3T015-01		DS3309 GANDALF			L/		SD3T015-01			3	160 161	FORM PER ED3T076-30 G 41A UN582 ONLY (MAX 250 FT.)
1250	40	1	JN4	807A	X-DIM	3B20D ( ) I/O UNIT ------- 3B21D CSPC	( )- ( ) ( )- ( ) SEE TBL DC DC6	( ) ( ) SEE TBL DC DC6	L/R		T*4C052-13	FIG.1	( ) 2024A 2048A 2096A DATA SET	( )- ( )		L/R		SD-5D071-01	AS-()		3		FORM PER ED5D517-30 G 4 TN75C ONLY
1251	39K	1	( )	812A	X-DIM	CSPC PROC OR IOP/SPU GRTH UN	SEE TBL ST	SEE TBL STA	L/R		SD3T015-01		DS STU1900			L/R		SD3T015-01			3	160 161	FORM PER ED3T076-20 G 55 UN582 ONLY (MAX 50 FT.)

COPYRIGHT @ 2001 LUCENT TECHNOLOGIES
ALL RIGHTS RESERVED

BT13

INTERCABINET CABLING
FOR
5ESS * SWITCH
*LUCENT TRADEMARK

DWG SIZE C2 | ISSUE 117

LUCENT TECHNOLOGIES INC | ED5D500-21 | SHEET A70 OF 292

PRINTED IN U.S.A.

CONNECTORIZED CABLING

ITEM	LIST OR GROUP	NBR RECD	CABLE IDENT	CABLE CODE	B DIM	FROM							TO							ROUTE	SHLD	NOTE	REMARKS
						FRAME OR UNIT	EQL	TERM	POS	DROP LGTH	WIRING DIAGRAM	FIGURE	FRAME OR UNIT	EQL	TERM	POS	DROP LGTH	WIRING DIAGRAM	FIGURE				
1260	41A	1	JV9	812A	X-DIM	M 00 CONV	045-165		L	6-3 /R/ 7-3 /P/	SD-5D130-01		DF								3	19959	BULK CABLE SEE MISC TABLE T
1280	41C	1	JV159	811A	X-DIM	SM( ) SMC( ) COMM JK PNL OR ( )	( )- ( ) SEE TBL KA1	501	L/R		SD-5D139-01		DF								3		FORM PER ED5D505-30 G 159 RUN TO SMC FOR START OF MULT FROM DF. SEE SK.K TBL KA1.
1290	41D	1	JV159A	811A	X-DIM	CM2 BAY/ / OR SM( ) SMC( ) COMM JK PNL OR ( )	( )- ( ) SEE TBL KA1	501	L/R		SD-5D139-01		DF								3		FORM PER ED5D505-30 G159A RUN TO CM2 BAY( ) OR SM FOR START OF MULT FROM DF. SEE SK.K TBL KA1.
1295	41E	1	JV159B	294A	X-DIM	CM2 BAY/ / OR SM( ) SMC( ) COMM JK PNL OR RING NODE OR ( )	( )- ( ) SEE TBL KA3	000	L		SD-5D139-01		DF								3		FORM PER ED5D505-30 G159B RUN TO CM2 BAY() OR SM OR 2SM SMC CABINET FOR START OF MULT FROM JF. SEE SK.K TBL KA3.
1310	42A	1	JV161	811A	X-DIM	SM( ) SMC( ) COMM JK PNL OR ( )	( )- ( ) SEE TBL KA2	701	L/R		SD-5D139-01		SM( ) SMC( ) COMM JK PNL OR ( )	( )- ( ) SEE TBL KA2	501	L/R					3		FORM PER ED5D505-30 G 161 MULT SUBSEQUENT SM CABINETS. SEE SK.K TBL KA2.
1320	42B	1	JV161A	811A	X-DIM	CM2 BAY/ / OR SM( ) SMC( ) OR CM2 BAY/ / COMM JK PNL OR ( )	/J1/ ( )- ( ) SEE TBL KA2	701	L/R		SD-5D139-01		CM2 BAY/ / OR SM( ) SMC( ) OR SM( ) AMC 1 COMM JK PNL OR ( )	/J2/ ( )- ( ) SEE TBL KA2	501	L/R					3		FORM PER ED5D505-30 G161A MULT SUBSEQUENT CM2 OR SM OR CM2 TO SM CABINETS. SEE SK.K TBL KA2.
1330	42C	1	JV161B	811A	X-DIM	SM( ) SMC( ) OR ( ) COMM JK PNL	/J1/ ( )- ( ) SEE TBL KA2 SEE TBL KA2	701	L/R		SD-5D139-01		CM2 BAY/ / OR SM( ) SMC( ) COMM JK PNL	/J2/ ( )- ( ) SEE TBL KA2	501	L/R					3		FORM PER ED5D505-30 G161B MULT BETWEEN SM AND CM2 OR SM CABINETS. SEE SK.K TBL KA2.

COPYRIGHT @ 2001 LUCENT TECHNOLOGIES
ALL RIGHTS RESERVED

BT13

INTERCABINET CABLING
FOR
5ESS * SWITCH
*LUCENT TRADEMARK

DWG SIZE C2 | ISSUE 117

LUCENT TECHNOLOGIES INC | ED5D500-21 | SHEET A71 OF 292

PRINTED IN U.S.A.

CONNECTORIZED CABLING

ITEM	LIST OR GROUP	NBR RECD	CABLE IDENT	CABLE CODE	B DIM	FROM							TO							ROUTE	SHLD	NOTE	REMARKS
						FRAME OR UNIT	EQL	TERM	POS	DROP LGTH	WIRING DIAGRAM	FIGURE	FRAME OR UNIT	EQL	TERM	POS	DROP LGTH	WIRING DIAGRAM	FIGURE				
1340	42D	1	JV161C	811A	X-DIM	CM2 BAY/ / OR SM( ) SMC( ) OR ( ) COMM JK PNL	/J1/ ( )- ( ) SEE TBL KA2	701	L/R		SD-5D139-01		SM( ) SMC 1 OR SM( ) SMC( ) COMM JK PNL	/J2/ ( )- ( ) SEE TBL KA2	501	L/R					3		FORM PER ED5D505-30 G161C MULT BETWEEN CM2 AND SM OR SM CABINETS. SEE SK.K TBL KA2.
1342	42E	1	JV161D	294A	X-DIM	SM( ) SMC( ) OR CM2 COMM JK PNL OR SM2K LTP( ) OR ( )	/J1/ ( )- ( ) SEE TBL KA4	100	L		SD-5D139-01		SM( ) SMC( ) COMM JK PNL	/J2/ ( )- ( ) SEE TBL KA4	501	L/R					3		FORM PER ED5D505-30 G161D MULT SMC,CM2,2SM IN SMC OR SM2K LTP( ) (E/W FJ) TO SM E/W AU. SEE SK.K TBL KA4.
1344	42F	1	JV161E	294A	X-DIM	CM2 BAY/ / OR SM( ) SMC( ) OR CM2 BAY/ / COMM JK PNL OR SM2K LTP( ) OR ( )	/J1/ ( )- ( ) SEE TBL KA4	100	L		SD-5D139-01		CM2 BAY/ / OR SM( ) SMC( ) OR SM( ) SMC 1 COMM JK PNL OR SM2K LTP( ) OR RING NODE	/J2/ ( )- ( ) SEE TBL KA4	501	L/R					3		FORM PER ED5D505-30 G161E MULT SUBSEQUENT CM2 OR SM OR 2SM OR SM2K LTP( )IN SMC TO SM OR CM2 CABINETS. SEE SK.K TBL KA4.
1346	42G	1	JV161F	294A	X-DIM	SM( ) SMC( ) OR COMM JK PNL OR SM2K LTP( ) OR ( )	/J1/ ( )- ( ) SEE TBL KA4 SEE TBL KA4	701	L		SD-5D139-01		CM2 BAY/ / OR SM( ) SMC( ) COMM JK PNL OR SM2K LTP( )	/J2/ ( )- ( )	000	L/R					3		FORM PER ED5D505-30 G161F MULT BETWEEN SM AND CM2 OR SM CABINETS. SEE SK.K TBL KA4.
1348	42H	1	JV161G	294A	X-DIM	CM2 BAY/ / OR SM( ) SMC( ) COMM JK PNL OR SM2K LTP( ) OR ( )	/J1/ ( )- ( ) SEE TBL KA4	701	L		SD-5D139-01		SM( ) SMC( ) OR SM( ) SMC( ) COMM JK PNL OR SM2K LTP( )	/J2/ ( )- ( ) SEE TBL KA4	000	L/R					3		FORM PER ED5D505-30 G161G MULT BETWEEN CM2 AND SM OR SM CABINETS. SEE SK.K TBL KA4.

COPYRIGHT @ 2001 LUCENT TECHNOLOGIES
ALL RIGHTS RESERVED

BT13

INTERCABINET CABLING
FOR
5ESS * SWITCH
*LUCENT TRADEMARK

DWG SIZE C2 | ISSUE 117

PRINTED IN U.S.A.

CONNECTORIZED CABLING

ITEM	LIST OR GROUP	NBR RECD	CABLE IDENT	CABLE CODE	B DIM	FROM							TO							ROUTE	SHLD	NOTE	REMARKS
						FRAME OR UNIT	EQL	TERM	POS	DROP LGTH	WIRING DIAGRAM	FIGURE	FRAME OR UNIT	EQL	TERM	POS	DROP LGTH	WIRING DIAGRAM	FIGURE				
1350	42J	1	JV161H	294A	X-DIM	SM( ) SMC( ) OR CM2 OR 2SM IN SMC OR DUN-S IN LTP LOCATED IN TRANS-MISSON AREA OUTSIDE 5E FT PRINT COMM JK PNL OR RING NODE OR SM2K LTP( ) OR ( )	/J1/ ( )- ( ) SEE TBL KA4	100	L/R		SD-5D139-01		SM( ) SMC( ) OR CM2 OR 2SM IN SMC COMM JK PNL OR SM2K LTP( ) OR RING NODE	/J2/ ( )- ( ) SEE TBL KA4	000	L/R					3		FORM PER ED5D505-30 G161H MULT SM,CM2,2SM IN SMC,SM2K LTP( ),DNU-S IN LTP LOCATED OUTSIDE 5E FT PRINT TO SM,CM2,2SM IN SMC,SM2K LTP( ). SEE SK.K TBL KA4.
1360	43	1	JN5	816A	X-DIM	3B20D ( ) I/O UNIT ------- 3B21D CSPC	( )- SEE TBL DC DC6	( )	L/R		T*4C053-12	1	( ) 212AR DATA SET	( )- ( )		L/R		SD-5D071-01	AS-( )		3		
1370	43A	1	JN12	812A	X-DIM	3B20D PCCA BAY 1 ------- 3B21D CSPC	( )- ( ) SEE TBL DC6	( ) SEE TBL DC6	L	3B20 4-1 /R/ 5-10 /P/ ---- 3B21 /R/ - /P/	SD-4C119-01		( ) 212AR DATA SET	( )- ( )		L/R		SD-5D071-01			3		FORM PER ED5D517-30 G 12 *MAX CABLE LENGTH 100’
1371	43D	1	( )	812A	X-DIM	CSPC OR M( ) OR ( )	SEE TBL ST	SEE TBL STA	L/R		SD3T015-01		DS212AR OR 2224 CEO OR 3800 MODEM			L/R		SD3T015-01			3	160 161	FORM PER ED3T076-20 G 54 (MAX. 100 FT.)
1375	43B	1	JN5B	816A	X-DIM	3B20D PCCA ------- 3B21D CSPC	( )- ( ) SEE TBL DC6	( ) SEE TBL DC6	L/R				DFA( ) OR DSC( ) OR M( )			L/R					3		FORM PER ED5D517-30 G 5B TN75 MAX CABLE LENGTH 50’. (TERMINATES AT A MODEM). UN582 SEE GROUP 43C.
1376	43C	1	( )	816A	X-DIM	CSPC OR M( ) OR ( )	SEE TBL ST	SEE TBL STA STC	L/R		SD3T015-01		DS201C OR DS212AR OR 3800 MODEM			L/R		SD3T015-01			3	160 161	FORM PER ED3T076-20 G 50 (MAX. 200 FEET)

COPYRIGHT @ 2001 LUCENT TECHNOLOGIES
ALL RIGHTS RESERVED

BT13

INTERCABINET CABLING
FOR
5ESS * SWITCH
*LUCENT TRADEMARK

DWG SIZE C2 | ISSUE 117

PRINTED IN U.S.A.

CONNECTORIZED CABLING

ITEM	LIST OR GROUP	NBR RECD	CABLE IDENT	CABLE CODE	B DIM	FROM							TO							ROUTE	SHLD	NOTE	REMARKS
						FRAME OR UNIT	EQL	TERM	POS	DROP LGTH	WIRING DIAGRAM	FIGURE	FRAME OR UNIT	EQL	TERM	POS	DROP LGTH	WIRING DIAGRAM	FIGURE				
1380	44	1	JV187	812A	X-DIM	M( ) F/F PNL	068- 043	101	L	1-7 /R/ 7-10 /P/	SD-5D130-01		M( ) F/F PNL	068- 043	301	L	1-7 /R/ 7-10 /P/	SD-5D130-01			3		FORM PER ED5D505-30 G 187 ALM MULT FROM SUCC (HIGHER NBD) MISC CAB TO PREC (LOWER NBD) MISC CAB / BUS 0 /
1390	44	1	JV189	812A	X-DIM	M( ) F/F PNL	068- 137	101	L	2-6 /R/ 7-10 /P/	SD-5D130-01		M( ) F/F PNL	068- 137	301	L	2-6 /R/ 7-10 /P/	SD-5D130-01			3		FORM PER ED5D505-30 G 189 ALM MULT FROM SUCC (HIGHER NBD) MISC CAB TO PREC (LOWER NBD) MISC CAB / BUS 1 /
1392	44A	1	JV188A	TIW 2/24	X-DIM	M( ) OR ( ) F/F PNL	()68- 098	003 006	L	2-6 /R/ 7-10 /P/	SD-5D130-01		M( ) F/F PNL	()68- 043 137	 301 301	L	2-6 /R/ 7-10 /P/	SD-5D130-01			3		FORM PER ED5D505-30 G188A ALM MULT FROM SUCC MFFU (HIGHER NBD) MISC CAB TO PREC AU-2 F/F (LOWER NBD) MISC CAB / BUS 0 & 1 / G44A RATED DA, SEE G44D
1394	44B	1	JV188B	TIW 2/24	X-DIM	M( ) OR ( ) F/F PNL	()68- 098	103 106	L	2-6 /R/ 7-10 /P/	SD-5D130-01		M( ) OR ( ) F/F PNL	()68- 098	003 006	L	2-6 /R/ 7-10 /P/	SD-5D130-01			3		FORM PER ED5D505-30 G188B ALM MULT FROM SUCC MFFU (HIGHER NBD) MISC CAB TO PREC MFFU (LOWER NBD) MISC CAB / BUS 0 & 1 / G44B RATED DA, SEE G44E
1396	44C	1	JV188C	TIW 2/24	X-DIM	M( ) F/F PNL	()68- 043 137	 101 101	L	2-6 /R/ 7-10 /P/	SD-5D130-01		M( ) F/F PNL	()68- 098	103 106	L	2-6 /R/ 7-10 /P/	SD-5D130-01			3		FORM PER ED5D505-30 G188C ALM MULT FROM SUCC AU-2 F/F (HIGHER NBD) MISC CAB TO PREC MFFU (LOWER NBD) MISC CAB / BUS 0 & 1 / G44C RATED DA, SEE G44F
1397	44D	1	JV188D	TIW 2/24	X-DIM	M( ) F/F PNL	( )68- 098	003 006	L	2-6 /R/ 7-10 /P/	SD5D130-01		M( ) F/F PNL	( )68- 043 137	 301 301	L	2-6 /R/ 7-10 /P/	SD5D130-01			3		FORM PER ED5D505-30 G188D ALM MULT FROM SUCC MFFU (HIGHER NBD) MISC CAB TO PREC AU-2 F/F (LOWER NBD) MISC CAB / BUS 0 & 1 /
1398	44E	1	JV188E	TIW 2/24	X-DIM	M( ) OR ( ) F/F PNL	( )68- 098	003 006	L	2-6 /R/ 7-10 /P/	SD5D130-01		M( ) OR ( ) F/F PNL	( )68- 098	103 106	L	2-6 /R/ 7-10 /P/	SD5D130-01			3		FORM PER ED5D505-30 G188E ALM MULT FROM SUCC MFFU (HIGHER NBD) MISC CAB TO PREC MFFU (LOWER NBD) MISC CAB / BUS 0 & 1 /
1399	44F	1	JV188F	TIW 2/24	X-DIM	M( ) F/F PNL	( )68- 043 137	 101 101	L	2-6 /R/ 7-10 /P/	SD5D130-01		M( ) F/F PNL	( )68- 098	103 106	L	2-6 /R/ 7-10 /P/	SD5D130-01			3		FORM PER ED5D505-30 G188F ALM MULT FROM SUCC AU-2 F/F (HIGHER NBD) MISC CAB TO PREC MFFU (LOWER NBD) MISC CAB / BUS 0 & 1 /
1400	45	1	JV31	816A	X-DIM	M 00 OFF ALM UNIT	051- 107	000	L	4-1 /R/ 6-9 /P/	SD-5D130-01		3B20D PCCA BAY 0 ------- 3B21D CSPC	( )- ( ) SEE DC5	( ) SEE DC5	L	3B20 4-9 /R/ 5-7 /P/ ---- 3B21 - /R/ - /P/	SD-4C119-01			3	163	
1410	45	1	JV33	816A	X-DIM	M 00 OFF ALM UNIT	051- 103	006	L	4-1 /R/ 6-8 /P/	SD-5D130-01		3B20D PCCA BAY 0 ------- 3B21D CSPC	( )- ( ) SEE TBL DC5	( ) SEE TBL DC5	L	3B20 4-7 /R/ 5-6 /P/ ---- 3B21 /R/ - /P/	SD-4C119-01			3	163	

COPYRIGHT @ 2001 LUCENT TECHNOLOGIES
ALL RIGHTS RESERVED

BT13

INTERCABINET CABLING
FOR
5ESS * SWITCH
*LUCENT TRADEMARK

DWG SIZE C2 | ISSUE 117

PRINTED IN U.S.A.

CONNECTORIZED CABLING

ITEM	LIST OR GROUP	NBR RECD	CABLE IDENT	CABLE CODE	B DIM	FROM							TO							ROUTE	SHLD	NOTE	REMARKS
						FRAME OR UNIT	EQL	TERM	POS	DROP LGTH	WIRING DIAGRAM	FIGURE	FRAME OR UNIT	EQL	TERM	POS	DROP LGTH	WIRING DIAGRAM	FIGURE				
1420	45	1	JV35	816A	X-DIM	M 00 OFF ALM UNIT	051-103	013	L	4-3 /R/ 7-0 /P/	SD-5D130-01		3B20D PCCA BAY 0 ------- 3B21D CSPC	( )- ( ) SEE TBL DC5	( ) SEE TBL DC5	L	3B20 4-9 /R/ 5-7 /P/ ---- 3B21 /R/ - /P/	SD-4C119-01			3	163	
1430	45	1	JV37	816A	X-DIM	M 00 OFF ALM UNIT	051-103	019	L	4-4 /R/ 7-0 /P/	SD-5D130-01		3B20D PCCA BAY 0 ------- 3B21D CSPC	( )- ( ) SEE TBL DC5	( ) SEE TBL DC5	L	3B20 4-7 /R/ 5-6 /P/ ---- 3B21 /R/ - /P/	SD-4C119-01			3	163	
1440	45	1	JV39	816A	X-DIM	M 00 OFF ALM UNIT	051-103	032	L	4-4 /R/ 7-0 /P/	SD-5D130-01		3B20D PCCA BAY 0 ------- 3B21D CSPC	( )- ( ) SEE TBL DC5	( ) SEE TBL DC5	L	3B20 4-9 /R/ 5-7 /P/ ---- 3B21 /R/ - /P/	SD-4C119-01			3	163	
1450	45	1	JV41	816A	X-DIM	M 00 OFF ALM UNIT	051-103	038	L	4-4 /R/ 7-0 /P/	SD-5D130-01		3B20 PCCA BAY 0 ------- 3B21D CSPC	( )- ( ) SEE TBL DC5	( ) SEE TBL DC5	L	3B20 4-7 /R/ 5-6 /P/ ---- 3B21 /R/ - /P/	SD-4C119-01			3	163	
1460	45	1	JV43	816A	X-DIM	M 00 OFF ALM UNIT	051-103	045	L	4-1 /R/ 7-5 /P/	SD-5D130-01		3B20D PCCA BAY 0 ------- 3B21D CSPC	( )- ( ) SEE TBL DC5	( ) SEE TBL DC5	L	3B20 4-9 /R/ 5-8 /P/ ---- 3B21 /R/ - /P/	SD-4C119-01			3	163	
1470	45	1	JV45	816A	X-DIM	M 00 OFF ALM UNIT	051-103	051	L	3-5 /R/ 7-5 /P/	SD-5D130-01		3B20D PCCA BAY 0 ------- 3B21D CSPC	( )- ( ) SEE TBL DC5	( ) SEE TBL DC5	L	3B20 4-9 /R/ 5-7 /P/ ---- 3B21 /R/ - /P/	SD-4C115-01			3	163	

COPYRIGHT @ 2001 LUCENT TECHNOLOGIES
ALL RIGHTS RESERVED

BT13

INTERCABINET CABLING
FOR
5ESS * SWITCH
*LUCENT TRADEMARK

DWG SIZE C2 | ISSUE 117

LUCENT TECHNOLOGIES INC | ED5D500-21 | SHEET A75 OF 292

PRINTED IN U.S.A.

CONNECTORIZED CABLING

ITEM	LIST OR GROUP	NBR RECD	CABLE IDENT	CABLE CODE	B DIM	FROM							TO							ROUTE	SHLD	NOTE	REMARKS
						FRAME OR UNIT	EQL	TERM	POS	DROP LGTH	WIRING DIAGRAM	FIGURE	FRAME OR UNIT	EQL	TERM	POS	DROP LGTH	WIRING DIAGRAM	FIGURE				
1480	45	1	JV47	816A	X-DIM	M 00 OFF ALM UNIT	051-105	000	L	4-1 /R/ 6-8 /P/	SD-5D130-01		3B20D PCCA BAY 1 ------- 3B21D CSPC	( )- ( ) SEE TBL DC5	( ) SEE TBL DC5	L	3B20 4-9 /R/ 5-7 /P/ ---- 3B21 /R/ - /P/	SD-4C119-01			3	163	
1490	45	1	JV49	816A	X-DIM	M 00 OFF ALM UNIT	051-105	006	L	4-1 /R/ 6-8 /P/	SD-5D130-01		3B20D PCCA BAY 1 ------- 3B21D CSPC	( )- ( ) SEE TBL DC5	( ) SEE TBL DC5	L	3B20 4-7 /R/ 5-6 /P/ ---- 3B21 /R/ - /P/	SD-4C119-01			3	163	
1500	45	1	JV51	816A	X-DIM	M 00 OFF ALM UNIT	051-105	013	L	4-3 /R/ 7-0 /P/	SD-5D130-01		3B20D PCCA BAY 1 ------- 3B21D CSPC	( )- ( ) SEE TBL DC5	( ) SEE TBL DC5	L	3B20 4-9 /R/ 5-7 /P/ ---- 3B21 /R/ - /P/	SD-4C119-01			3	163	
1510	45	1	JV53	816A	X-DIM	M 00 OFF ALM UNIT	051-105	019	L	4-3 /R/ 7-0 /P/	SD-5D130-01		3B20D PCCA BAY 1 ------- 3B21D CSPC	( )- ( ) SEE TBL DC5	( ) SEE TBL DC5	L	3B20 4-7 /R/ 5-6 /P/ ---- 3B21 /R/ - /P/	SD-4C119-01			3	163	
1520	45	1	JV55	816A	X-DIM	M 00 OFF ALM UNIT	051-105	032	L	3-7 /R/ 7-0 /P/	SD-5D130-01		3B20D PCCA BAY 1 ------- 3B21D CSPC	( )- ( ) SEE TBL DC5	( ) SEE TBL DC5	L	3B20 4-9 /R/ 5-7 /P/ ---- 3B21 /R/ - /P/	SD-4C119-01			3	163	
1530	45	1	JV57	816A	X-DIM	M 00 OFF ALM UNIT	051-105	038	L	3-7 /R/ 7-0 /P/	SD-5D130-01		3B20D PCCA BAY 1 ------- 3B21D CSPC	( )- ( ) SEE TBL DC5	( ) SEE TBL DC5	L	3B20 4-7 /R/ 5-6 /P/ ---- 3B21 /R/ - /P/	SD-4C119-01			3	163	

COPYRIGHT @ 2001 LUCENT TECHNOLOGIES
ALL RIGHTS RESERVED

BT13

INTERCABINET CABLING
FOR
5ESS * SWITCH
*LUCENT TRADEMARK

DWG SIZE C2 | ISSUE 117

LUCENT TECHNOLOGIES INC | ED5D500-21 | SHEET A76 OF 292

PRINTED IN U.S.A.

CONNECTORIZED CABLING

ITEM	LIST OR GROUP	NBR RECD	CABLE IDENT	CABLE CODE	B DIM	FROM							TO							ROUTE	SHLD	NOTE	REMARKS
						FRAME OR UNIT	EQL	TERM	POS	DROP LGTH	WIRING DIAGRAM	FIGURE	FRAME OR UNIT	EQL	TERM	POS	DROP LGTH	WIRING DIAGRAM	FIGURE				
1540	45	1	JV59	816A	X-DIM	M 00 OFF ALM UNIT	051-105	045	L	3-5 /R/ 7-5 /P/	SD-5D130-01		3B20D PCCA BAY 1 ------- 3B21D CSPC	( )-( ) SEE TBL DC5	( ) SEE TBL DC5	L	3B20 4-11 /R/ 5-8 /P/ ---- 3B21 /R/ - /P/	SD-4C119-01			3	163	
1550	45	1	JV61	816A	X-DIM	M 00 OFF ALM UNIT	051-105	051	L	3-5 /R/ 7-5 /P/	SD-5D130-01		3B20D PCCA BAY 1 ------- 3B21D CSPC	( )-( ) SEE TBL DC5	( ) SEE TBL DC5	L	3B20 4-9 /R/ 5-7 /P/ ---- 3B21 /R/ - /P/	SD-4C119-01			3	163	
1560	45	1	JV119	801A	X-DIM	M 00 OFF ALM UNIT	051-086	113 132	L	4-1 /R/ 6-10 /P/	SD-5D130-01		DF								3	163	
1570	45	1	JV121	801A	X-DIM	M 00 OFF ALM UNIT	051-086 051-118	145 113	L	3-11 /R/ 7-3 /P/	SD-5D130-01		DF								3	163	
1580	45	1	JV123	801A	X-DIM	M 00 OFF ALM UNIT	051-118	132 145	L	3-11 /R/ 7-3 /P/	SD-5D130-01		DF								3	163	
1582	45A	1	JV237	812A	X-DIM	M 00 OFF ALM UNIT	051-134	145	L	3-11 /R/ 7-1 /P/	SD-5D130-01		3B20D PCCA BAY 0 ------- 3B21D CSPC	( )-( ) SEE TBL DC5	( ) SEE TBL DC5	L	3B20 4-10 /R/ 4-4 /P/ ---- 3B21 /R/ - /P/	SD-4C119-01			3		
1584	45A	1	JV239	812A	X-DIM	M 00 OFF ALM UNIT	051-134	345	L	3-11 /R/ 7-1 /P/	SD-5D130-01		3B20D PCCA BAY 1 ------- 3B21D CSPC	( )-( ) SEE TBL DC5	( ) SEE TBL DC5	L	3B20 4-10 /R/ 4-4 /P/ ---- 3B21 /R/ - /P/	SD-4C119-01			3		
1586	45A	1	JV241	812A	X-DIM	M 00 OFF ALM UNIT	051-150	113	L	4-5 /R/ 6-11 /P/	SD-5D130-01		DF								3		
1590	46	1	JV46	808A (SEE RMKS)	X-DIM	M/ /	/ / TSA 0		R	7-0	SD5D130-01		DF									155 59	BULK CABLE 22 PR 26GA CABLE AS REQUIRED.
1595	46A	1	JV46A	808A (SEE RMKS)	X-DIM	M/ /	/ / TSA 1, 2		R	7-0	SD5D130-01		DF									155 59	BULK CABLE 22 PR 26GA CABLE AS REQUIRED.
1600	46B	1	JV46B	761A (SEE RMKS)	X-DIM	M/ /	/ / TSA 0		R	7-0	SD5D130-01		DF									59	BULK CABLE

COPYRIGHT @ 2001 LUCENT TECHNOLOGIES
ALL RIGHTS RESERVED

BT13

INTERCABINET CABLING
FOR
5ESS * SWITCH
*LUCENT TRADEMARK

DWG SIZE C2 | ISSUE 117

LUCENT TECHNOLOGIES INC | ED5D500-21 | SHEET A77 OF 292

PRINTED IN U.S.A.

CONNECTORIZED CABLING

ITEM	LIST OR GROUP	NBR RECD	CABLE IDENT	CABLE CODE	B DIM	FROM							TO							ROUTE	SHLD	NOTE	REMARKS
						FRAME OR UNIT	EQL	TERM	POS	DROP LGTH	WIRING DIAGRAM	FIGURE	FRAME OR UNIT	EQL	TERM	POS	DROP LGTH	WIRING DIAGRAM	FIGURE				
1605	46C	1	JV46C	812A (SEE RMKS)	X-DIM	M/ /	/ / TSA 1, 2		R	7-0	SD5D130-01		M/ /	/ / TSA O								156	BULK CABLE 1 PR 26GA CABLE AS REQUIRED OMIT WHEN J1A033GR-1 AND J1A033GU-1 ARE LOCATED ON SAME MISC. FRAME.
1700	50	1	JR39	285A	X-DIM	SM( ) LTP/ / OR SMC // MMSU/ /	/J1/ ( )- ( ) /J2/ ( )- ( )	( ) ( ) SEE TBL CC	L	SEE TBL DA & DB	SD-5D016-01		DF								3		
1710	51	1	JR40	285A	X-DIM	SM( ) LTP/ / OR SMC // MMSU/ /	/J1/ ( )- ( ) /J2/ ( )- ( )	( ) ( ) SEE TBL CC	R	SEE TBL DA & DB	SD-5D016-01		DF								3		
1720	52	1	JV16	812A	X-DIM	EXIT PILOT LAMP	TS A				SD-5D017-01		EXIT PILOT LAMP ( )	TS A				SD-5D017-01			3	199 59	MULT 1ST TO 2ND TO 3RD EXIT PILOT LAMP AS REQUIRED. (1ST GROUP) BULK CABLE NO STAMPING REQUIRED. SEE MISC TABLE T
1730	53	1	JV17	812A	X-DIM	EXIT PILOT LAMP	TS A				SD-5D017-01		EXIT PILOT LAMP ( )	TS A				SD-5D017-01			3	199 59	MULT 1ST TO 4TH TO 5TH TO 6TH EXIT PILOT LAMP AS REQUIRED. (2ND GROUP) BULK CABLE (DO NOT USE WHEN RARU PER J5D005C-1,L16,LX AND LZ IS SPECIFIED FOR VISUAL ALM). NO STAMPING REQUIRED. SEE MISC TABLE T
1740	54 | |	1	$JW2$	807A	X-DIM	MCC/ TLWS OR STLWS() TST ACC UNIT	J2				SD-5D114-01 OR SD-5D099-01		DF								3		
1750	54 |	1	$JW3$	807A	X-DIM	MCC/ TLWS OR STLWS() TST ACC UNIT	J3				SD-5D114-01 OR SD-5D099-01		DF								3		
1751	54 |	1	JW20	808A	X-DIM	MCC/ TLWS OR STLWS() TST ACC UNIT		J2 J3			SD-5D114-01 OR SD-5D099-01		DF								3		
1755	54A	1	JW19	803A	X-DIM	MCC/ TLWS OR STLWS() TAU		J1 J2 J3			SD5D142-01		DF								3		
1760	55	1	JN6	811A	X-DIM	DSC( ) 212AR DATA SET	( )- ( )				SD-5D071-01		DF								3		
1770	56	1	JN9	812A	X-DIM	48FR1 DSC// 59A1 OR 44A2 DATA MTG	//- //				SD-5D071-01		DF								3		

COPYRIGHT @ 2001 LUCENT TECHNOLOGIES
ALL RIGHTS RESERVED

BT13

INTERCABINET CABLING
FOR
5ESS * SWITCH
*LUCENT TRADEMARK

DWG SIZE C2 | ISSUE 117

LUCENT TECHNOLOGIES INC | ED5D500-21 | SHEET A78 OF 292

PRINTED IN U.S.A.

CONNECTORIZED CABLING

ITEM	LIST OR GROUP	NBR RECD	CABLE IDENT	CABLE CODE	B DIM	FROM							TO							ROUTE	SHLD	NOTE	REMARKS
						FRAME OR UNIT	EQL	TERM	POS	DROP LGTH	WIRING DIAGRAM	FIGURE	FRAME OR UNIT	EQL	TERM	POS	DROP LGTH	WIRING DIAGRAM	FIGURE				
1780	56A	1	JN9A	812A	X-DIM	48FR1 DS/ / 59A1 OR 44A2 DATA MTG	/ /- / /				SD5D071-01		DF								3		
1790	58	1	JN7	A25B	X-DIM	CONN BLOCK 82B-49					SD-5D101-01		DF								3	199 82	(FOR CONSOLE TYPE ONLY) CABLE PROVIDED IS 50FT. SEE MISC TABLE T
1800	59	1	JN8	A25W	X-DIM	DSC// DATA MTG 46A2	//- //	J9			SD-5D071-01		DF								3	199 82	SEE MISC TABLE T
1810	60 |	1	JW10	812AS	X-DIM	ROP STLWS()					SD-5D101-01 SD-5D114-01		3B20D PCCA BAY( ) --- 3B21D CSPC	( )- ( ) SEE --- SEE	( ) TBL --- TBL	DC --- DC6	3B20 SEE TBL BU --- 3B21 SEE TBL BU-1	SD-4C119-01			3		
1820	61 |	1	JW11	812AS	X-DIM	VT100 STLWS() OR RCV-LOC					SD-5D101-01 SD-5D114-01		3B20D PCCA BAY( ) --- 3B21D CSPC	SEE ( )- ( ) --- SEE	TBL ( ) --- TBL	DC --- DC6	SEE TBL BU --- 3B21 SEE TBL BU-1	SD-4C119-01			3		
1830	62	1	JN11	812A	X-DIM	CONN BLOCK 91B					SD-5D114-01		DF								3	199 59	BULK CABLE (FOR IN LINE CABINETS OR CONSOLE) NO STAMPING REQUIRED. SEE MISC TABLE T
1840	63 |	1	JW13	812AS	X-DIM	CLR VT STLWS() OR ORP() OR TRP()					SD-5D101-01 SD-5D114-01		3B20D PCCA BAY ( ) --- 3B21D CSPC	SEE ( )- ( ) --- SEE	TBL ( ) --- TBL	DC --- DC6	SEE TBL BU --- 3B21 SEE TBL DC6	SD-4C119-01			3		FORM PER ED5D502-30 G 13 (MAX. 50’).
1841	63A	1	( )	812AS	X-DIM	CSPC OR M( ) OR ( )	SEE TBL ST	SEE TBL STA	L/R		SD3T015-01		ROP 572 OR 577 PRINTER OR KS23996 L1 OR 2900 TERM			L/R		SD3T015-01			3	160 161	FORM PER ED3T076-20 G 56 (MAX. 250 FEET)
1842	63B	1	( )	812AS	X-DIM	CSPC PROC OR IOP/SPU GRTH UN	SEE TBL ST	SEE TBL STA	L/R		SD3T015-01		VT100			L/R		SD3T015-01			3	160 161	FORM PER ED3T076-20 G 57 UN582 ONLY (MAX. 250 FEET)
1843	63C	1	( )	812AS	X-DIM	CSPC PROC OR IOP/SPU GRTH UN	SEE TBL ST	SEE TBL STA	L/R		SD3T015-01		VT			L/R		SD3T015-01			3	160 161	FORM PER ED3T076-20 G 58 UN582 ONLY (MAX. 250 FEET)

COPYRIGHT @ 2001 LUCENT TECHNOLOGIES
ALL RIGHTS RESERVED

BT13

INTERCABINET CABLING
FOR
5ESS * SWITCH
*LUCENT TRADEMARK

DWG SIZE C2 | ISSUE 117

PRINTED IN U.S.A.

CONNECTORIZED CABLING

ITEM	LIST OR GROUP	NBR RECD	CABLE IDENT	CABLE CODE	B DIM	FROM							TO							ROUTE	SHLD	NOTE	REMARKS
						FRAME OR UNIT	EQL	TERM	POS	DROP LGTH	WIRING DIAGRAM	FIGURE	FRAME OR UNIT	EQL	TERM	POS	DROP LGTH	WIRING DIAGRAM	FIGURE				
1845	64 |	1	JW14	1246004C	X-DIM	ROP STLWS()					SD-5D101-01 SD-5D114-01		3B20D PCCA BAY ( ) --- 3B21D CSPC	SEE ( )-( ) --- SEE	TBL ( ) --- TBL	DC --- DC6	SEE TBL BU --- 3B21 SEE TBL BU-1	SD-4C119-01			3		FORM PER ED5D502-30 G 14 (MAX. 250').
1850	65 |	1	JW15	1246004C	X-DIM	VT100 STLWS()					SD-5D101-01 SD-5D114-01		3B20D PCCA BAY ( ) --- 3B21D CSPC	SEE ( )-( ) --- SEE	TBL ( ) --- TBL	DC --- DC6	SEE TBL BU --- 3B21 SEE TBL BU-1	SD-4C119-01			3		FORM PER ED5D502-30 G 15 (MAX. 250').
1855	66 |	1	JW16	1246004C	X-DIM	CLR VT STLWS() OR ORP() OR TRP() OR ( )					SD-5D101-01 SD-5D114-01		3B20D PCAA BAY ( ) --- 3B21D CSPC OR ECPC OR OMP	SEE ( )-( ) --- SEE	TBL ( ) --- TBL	DC --- DC6	SEE TBL BU --- 3B21 SEE TBL BU-1	SD-4C119-01			3		FORM PER ED5D502-30 G 16 (MAX. 250')
1856	66A	1	( )	1246004C	X-DIM	CSPC OR M( ) OR ( )	SEE TBL ST	SEE TBL STA	L/R		SD3T015-01		ROP 572 OR 577 PRINTER OR KS23996 L1 OR 2900 TERM			L/R		SD3T015-01			3	160 161	FORM PER ED3T076-20 G 56A MAX 250 FT
1857	66B	1	( )	1246004C	X-DIM	CSPC PROC OR IOP/SPU GRTH UN	SEE TBL ST	SEE TBL STA	L/R		SD3T015-01		VT100			L/R		SD3T015-01			3	160 161	FORM PER ED3T076-20 G 57A UN582 ONLY (MAX 250 FT.)
1858	66C	1	( )	1246004C	X-DIM	CSPC PROC OR IOP/SPU GRTH UN	SEE TBL ST	SEE TBL STA	L/R		SD3T015-01		VT			L/R		SD3T015-01			3	160 161	FORM PER ED3T076-20 G 58A UN582 ONLY (MAX 250 FT.)
1860	67 |	1	JW17	812A	X-DIM	ROP/ VT100 STLWS() OR ( )					SD-5D101-01 SD-5D114-01		( ) 202T 212AR DATA SET OR ( )	( )-( )		L/R		SD-5D071-01			3		FORM PER ED5D502-30 G 17 (MAX. 50').
1861	67A |	1	JW17A	1246004C	RMKS	ROP/ VT100 STLWS ( )					SD5D114-01 SD5D101-01		( )	( )-( )		L/R		SD5D071-01			3		FORM PER ED5D502-30 G 17A (MAX 250').

COPYRIGHT @ 2001 LUCENT TECHNOLOGIES
ALL RIGHTS RESERVED

BT13

INTERCABINET CABLING
FOR
5ESS * SWITCH
*LUCENT TRADEMARK

DWG SIZE C2 | ISSUE 117

LUCENT TECHNOLOGIES INC | ED5D500-21 | SHEET A80 OF 292

PRINTED IN U.S.A.

CONNECTORIZED CABLING

ITEM	LIST OR GROUP	NBR RECD	CABLE IDENT	CABLE CODE	B DIM	FROM							TO							ROUTE	SHLD	NOTE	REMARKS
						FRAME OR UNIT	EQL	TERM	POS	DROP LGTH	WIRING DIAGRAM	FIGURE	FRAME OR UNIT	EQL	TERM	POS	DROP LGTH	WIRING DIAGRAM	FIGURE				
1865	68 |	1	JW18	812A	X-DIM	CLR VT STLWS() OR ( )					SD-5D101-01 SD-5D114-01		( ) 202T 212AR DATA SET OR ( )	( )- ( )		L/R		SD-5D071-01			3		FORM PER ED5D502-30 G 18 (MAX. 50').
1866	68A |	1	JW18A	1246004C	RMKS	CLR VT STLWS ( )					SD5D101-01 SD5D114-01		( )	( )- ( )		L/R		SD5D071-01			3		FORM PER ED5D502-30 G 18A (MAX250').
1870	69	1	JN13	811A	X-DIM	MOD 43 TTY ( )					SD-5D071-01		( ) 212AR DATA SET	( )- ( )		L/R		SD-5D071-01			3		FORM PER ED5D517-30 G 13 *MAX CABLE LENGTH 100'
1880	70	1	JN14	807A	X-DIM	MSA CONV. OR MPG( )	()-() OR ()29- J1						( ) 2048A DATA SET (KS-22636 L1 ADPT)	( )- ( )		L/R		SD-5D071-01	AS-()		3		
1890	71	1	JN15	1246004C	X-DIM	3B20D ( ) I/O UNIT PCCA BAY ( ) ------- 3B21D CSPC OR ECPC OR OMP	( )- ( ) SEE	( ) TBL	L/R DC DC6				( ) 212A	( )- ( )		L/R		SD-5D071-01	AS-()		3		FORM PER ED5D517-30 G 15 *MAX LENGTH OF CABLE 250 FEET.
1900	72	1	JN16	811AS	X-DIM	3B20D ( ) I/O UNIT ------- 3B21D CSPC	( )- ( ) SEE	( ) TBL	L/R DC DC6	( )	SD-4C119-01		( ) 2556B DATA SET	( )- ( )		L/R		SD-5D071-01	AS-( )		3		FORM PER ED5D517-30 G 16 50 FT MAX LG
1910	72A	1	JN18	812A	X-DIM	103A CONN BLK					SD5D071-01		DF								3	199	BULK CABLE SEE MISC TABLE T
1920	72B	1	JN18A	812A	X-DIM	103A CONN BLK					SD5D071-01		103A CONN BLK					SD5D071-01			3	59	BULK CABLE
1921	72C	1	( )	811AS	X-DIM	CSPC OR M( ) OR ( )	SEE TBL ST	SEE TBL STA	L/R		SD3T015-01		DS2556B OR 3500 MODEM			L/R		SD3T015-01			3	160 161	FORM PER ED3T076-20 G 62 (MAX. 150 FT.)
1922	73	1	( )	816A	X-DIM	CSPC PROC OR IOP/SPU GRTH UN	SEE TBL ST	SEE TBL STA	L/R		SD3T015-01		HDWE FL CONT DS	( )		L/R		SD3T015-01			3	160 161	FORM PER ED3T076-20 G 59 UN582 ONLY (MAX 50 FT.)

COPYRIGHT @ 2001 LUCENT TECHNOLOGIES
ALL RIGHTS RESERVED

BT13

INTERCABINET CABLING
FOR
5ESS * SWITCH
*LUCENT TRADEMARK

DWG SIZE C2 | ISSUE 117

LUCENT TECHNOLOGIES INC | ED5D500-21 | SHEET A81 OF 292

PRINTED IN U.S.A.

CONNECTORIZED CABLING

ITEM	LIST OR GROUP	NBR RECD	CABLE IDENT	CABLE CODE	B DIM	FROM							TO							ROUTE	SHLD	NOTE	REMARKS
						FRAME OR UNIT	EQL	TERM	POS	DROP LGTH	WIRING DIAGRAM	FIGURE	FRAME OR UNIT	EQL	TERM	POS	DROP LGTH	WIRING DIAGRAM	FIGURE				
1923	74	1	( )	812AS	X-DIM	CSPC PROC OR IOP/SPU GRTH UN	SEE TBL ST	SEE TBL STA	L/R		SD3T015-01		HDWE FL CONT DS			L/R		SD3T015-01			3	160 161	FORM PER ED3T076-20 G 60 UN582 ONLY (MAX 50 FT.)
1924	75	1	( )	807A	X-DIM	CSPC PROC OR IOP/SPU GRTH UN	SEE TBL ST	SEE TBL STA	L/R		SD3T015-01		DS2024A OR DS2048A OR DS2096A			L/R		SD3T015-01			3	160 161	FORM PER ED3T076-20 G 61 UN582 ONLY (MAX 50 FT.)
1925	76	1	JV250	3349A	X-DIM	M ( ) OKEFORD SIGNAL PROTCOL CONV	()-() SEE TBL STD	/J1/ ( ) SEE TBL STD STD	R	SEE TBL CN1			DSX								3		
1926	77	1	JV251	3349A	X-DIM	M ( ) OKEFORD SIGNAL PROTCOL CONV	()-() SEE TBL STE	/J1/ ( ) SEE TBL STE	R	SEE TBL CN1			MDF								3		
1930	78	1	JV78	735A	X-DIM	M ( ) CRONUS SIGNAL PATH 230 SIGNAL PROTCOL CONV	()-() SEE TBL STF	/J1/	R	SEE TBL CN2			DSX								3		FORM PER ED5D803-36 G 22 (TX)
1940	78	1	JV78A	735A	X-DIM	M ( ) CRONUS SIGNAL PATH 230 SIGNAL PROTCOL CONV	()-() SEE TBL STF	/J1/	R	SEE TBL CN2			DSX								3		FORM PER ED5D803-36 G 22A (RX)
1945	79	1	( )	807AS	X-DIM	CSPC PROC OR IOP/SPU GRTH UN	SEE TBL ST	SEE TBL STA	L/R		SD3T015-01		DS2024A OR DS2048A OR DS2096A			L/R		SD3T015-01			3	160 161	FORM PER ED3T076-20 G 65 UN582 ONLY (MAX 150 FT.)
2000	80	DA	JR345	812A	X-DIM	SM ( ) LTP 0 RCU	045- 072	116	L	4-0 /R/ 6-2 /P/	SD5D075-01		DF								3		
2010	80	DA	JR343	812A	X-DIM	SM ( ) LTP 0 RCU	045- 072	151	L	3-8 /R/ 6-6 /P/	SD-5D075-01		DF								3		
2020	80	DA	JR346	812A	X-DIM	SM ( ) LTP 0 RCU	045- 162	116	R	3-7 /R/ 5-8 /P/	SD-5D075-01		DF								3		
2030	80	DA	JR344	812A	X-DIM	SM ( ) LTP 0 RCU	045- 162	151	R	3-2 /R/ 6-0 /P/	SD-5D075-01		DF								3		
2040	80	DA	JR347	816A	X-DIM	SM ( ) LTP 0 RCU	045- 013	013	L	3-5 /R/ 5-7 /P/	SD-5D075-01		DF								3		

COPYRIGHT @ 2001 LUCENT TECHNOLOGIES
ALL RIGHTS RESERVED

BT13

INTERCABINET CABLING
FOR
5ESS * SWITCH
*LUCENT TRADEMARK

DWG SIZE C2 | ISSUE 117

LUCENT TECHNOLOGIES INC | ED5D500-21 | SHEET A82 OF 292

PRINTED IN U.S.A.

CONNECTORIZED CABLING

ITEM	LIST OR GROUP	NBR RECD	CABLE IDENT	CABLE CODE	B DIM	FROM							TO							ROUTE	SHLD	NOTE	REMARKS
						FRAME OR UNIT	EQL	TERM	POS	DROP LGTH	WIRING DIAGRAM	FIGURE	FRAME OR UNIT	EQL	TERM	POS	DROP LGTH	WIRING DIAGRAM	FIGURE				
2050	80	DA	JR348	816A	X-DIM	SM ( ) LTP 0 RCU	045- 103	013	R	4-2 /R/ 6-4 /P/	SD-5D075-01		DF								3		
2060	80	DA	JR349	811A	X-DIM	SM ( ) LTP 0 RCU	045- 013	000	L	3-10 /R/ 5-2 /P/	SD-5D075-01		DF								3		
2070	80	DA	JR350	811A	X-DIM	SM ( ) LTP 0 RCU	045- 103	000	R	4-7 /R/ 5-11 /P/	SD-5D075-01		DF								3		
2080	80A	1	JR355	KS-19224,L1*	X-DIM	SM ( ) LTP // OR SMC // RCU	( )- ( ) SEE TBL BY	J( ) SEE TBL BY	L	SEE TBL BY	SD-5D075-01		BRDG REP								3		FORM PER ED5D503-30 G 355 *KS-19224,L1 COAXIAL CABLE 75 OHMS (1 CABLE PER REF) LTP POS 3 AND 4 (EQL'S 36 & 45) OR SMC POS 0,4 AND 5 (EQL'S 11,45 & 53) NOTE:WHEN MCTU3 IS IN POS 2,THE RCU IS IN POS 0 AND THE FIU IS IN POS 1
2090	80A	1	JR356	KS-19224,L1*	X-DIM	SM ( ) LTP // OR SMC // RCU	( )- ( ) SEE TBL BY	J( ) SEE TBL BY	R	SEE TBL BY	SD-5D075-01		BRDG REP								3		FORM PER ED5D503-30 G 356 *KS-19224,L1 COAXIAL CABLE 75 OHMS (1 CABLE PER REF). LTP POS 3 AND 4 (EQL'S 36 & 45) OR SMC POS 0,4 AND 5 (EQL'S 11,45 & 53) NOTE: WHEN MCTU3 IS IN POS 2,THE RCU IS IN POS 0 AND THE FIU IS IN POS 1
2100	80B	1	JR357	KS-19224,L1*	X-DIM	SM ( ) LTP // OR SMC // RCU	( )45- 034	ANLG 1-0	L	3-3 /R/ 5-5 /P/	SD-5D075-01		ATF								3		FORM PER ED5D503-30 G 357 *KS-19224,L1 COAXIAL CABLE 75 OHMS
2110	80B	1	JR359	KS-19224,L1*	X-DIM	SM ( ) LTP // OR SMC // RCU	( )45- 056	ANLG 2-0	L	3-6 /R/ 5-7 /P/	SD-5D075-01		ATF								3		FORM PER ED5D503-30 G 359 *KS-19224,L1 COAXIAL CABLE 75 OHMS
2120	80B	1	JR358	KS-19224,L1	X-DIM	SM ( ) LTP // OR SMC // RCU	( )45- 124	ANLG 1-1	R	 3-6 /R/ 5-8 /P/	SD-5D075-01		ATF								3		FORM PER ED5D503-30 GG358 *KS-19224,L1 COAXIAL CABLE 75 OHMS
2130	80B	1	JR360	KS-19224,L1*	X-DIM	SM ( ) LTP // OR SMC // RCU	( )45- 146	ANLG 2-1	R	3-3 /R/ 5-5 /P/	SD-5D075-01		ATF								3		FORM PER ED5D503-30 G 360 *KS-19224,L1 COAXIAL CABLE 75 OHMS
2140	80C	1	JR361	750A	X-DIM	SM( ) LTP // OR SMC // RCU0	( )- 048	354, 307	L	4-3 /R/ 7-1 /P/	SD-5D075-01		DSX BRDG REP								3		FORM PER ED5D503-30 G 361 CABLE LENGTH LESS THAN 460 FEET (CLK REF 1 & 2) LTP POS 3 AND 4 (EQL'S 36 & 45) OR SMC POS 0,4 & 5 EQL'S 11,45 & 53) NOTE:WHEN MCTU3 IS IN POS 2,THE RCU IS IN POS 0 AND THE FIU IS IN POS 1

COPYRIGHT @ 2001 LUCENT TECHNOLOGIES
ALL RIGHTS RESERVED

BT13

INTERCABINET CABLING
FOR
5ESS * SWITCH
*LUCENT TRADEMARK

DWG SIZE C2 | ISSUE 117

LUCENT TECHNOLOGIES INC | ED5D500-21 | SHEET A83 OF 292

PRINTED IN U.S.A.

CONNECTORIZED CABLING

ITEM	LIST OR GROUP	NBR RECD	CABLE IDENT	CABLE CODE	B DIM	FROM							TO							ROUTE	SHLD	NOTE	REMARKS
						FRAME OR UNIT	EQL	TERM	POS	DROP LGTH	WIRING DIAGRAM	FIGURE	FRAME OR UNIT	EQL	TERM	POS	DROP LGTH	WIRING DIAGRAM	FIGURE				
2150	80C	1	JR363	750A	X-DIM	SM( ) LTP // OR SMC // RCU1	( )- 138	354, 307	R	4-3 /R/ 7-1 /P/	SD-5D075-01		DSX BRDG REP								3		FORM PER ED5D503-30 G 363 CABLE LENGTH LESS THAN 460 FEET (CLK REF 1 & 2) LTP POS 3 AND 4 (EQL'S 36 & 45) OR SMC POS 0,4 AND 5 (EQL'S 11,45 & 53) NOTE:WHEN MCTU3 IS IN POS 2,THE RCU IS IN POS 0 AND THE FIU IS IN POS 1
2160	80D	1	JR365	606B	X-DIM	SM( ) LTP // OR SMC // RCU0	( )- 048	354, 307	L	4-3 /R/ 7-1 /P/	SD-5D075-01		DSX BRDG REP								3		FORM PER ED5D503-30 G 365 CABLE LENGTH 460 FEET OR GREATER (CLK REF 1 & 2) LTP POS 3 AND 4 (EQL'S 36 & 45) OR SMC POS 0,4 AND 5 (EQL'S 11,45 & 53) NOTE:WHEN MCTU3 IS IN POS 2,THE RCU IS IN POS 0 AND THE FIU IS IN POS 1
2170	80D	1	JR367	606B	X-DIM	SM( ) LTP // OR SMC // RCU1	( )- 138	354, 307	R	4-3 /R/ 7-1 /P/	SD-5D075-01		DSX BRDG REP								3		FORM PER ED5D503-30 G 367 CABLE LENGTH 460 FEET OR GREATER (CLK REF 1 & 2) LTP POS 3 AND 4 (EQL'S 36 & 45) OR SMC POS 0,4 AND 5 (EQL'S 11,45 & 53) NOTE:WHEN MCTU3 IS IN POS 2,THE RCU IS IN POS 0 AND THE FIU IS IN POS 1
2180	80E	1	JR357A	RMKS*	RMKS	SM( ) LTP // OR SMC // RCU	( )45- 034	ANLG 1-0	L	3-3 /R/ 5-5 /P/	SD5D075-01		ATF								3		FORM PER ED5D503-30 G357A *CABLE ASSEMBLY CONSISTS OF CABLE 'A' MADE OF KS-19224,L2 75 OHM MINICOAX 3 FEET LONG, AND CABLE 'B' MADE OF 728B COAX CABLE. MAX LENGTH OF CABLE IS 2000 FEET.
2185	80E	1	JR359A	RMKS*	RMKS	SM( ) LTP // OR SMC // RCU	( )45- 056	ANLG 2-0	L	3-6 /R/ 5-7 /P/	SD5D075-01		ATF								3		FORM PER ED5D503-30 G359A *CABLE ASSEMBLY CONSISTS OF CABLE 'A' MADE OF KS-19224,L2 75 OHM MINICOAX 3 FEET LONG, AND CABLE 'B' MADE OF 728B COAX CABLE. MAX LENGTH OF CABLE IS 2000 FEET.
2190	80E	1	JR358A	RMKS*	RMKS	SM( ) LTP // OR SMC // RCU	( )45- 124	ANLG 1-1	R	3-6 /R/ 5-8 /P/	SD5D075-01		ATF								3		FORM PER ED5D503-30 G358A *CABLE ASSEMBLY CONSISTS OF CABLE 'A' MADE OF KS-19224,L2 75 OHM MINICOAX 3 FEET LONG, AND CABLE 'B' MADE OF 728B COAX CABLE. MAX LENGTH OF CABLE IS 2000 FEET.
2195	80E	1	JR360A	RMKS*	RMKS	SM( ) LTP // OR SMC // RCU	( )45- 146	ANLG 2-1	R	3-3 /R/ 5-5 /P/	SD5D075-01		ATF								3		FORM PER ED5D503-30 G360A *CABLE ASSEMBLY CONSISTS OF CABLE 'A' MADE OF KS-19224,L2 75 OHM MINICOAX 3 FEET LONG, AND CABLE 'B' MADE OF 728B COAX CABLE. MAX LENGTH OF CABLE IS 2000 FEET.
2196	80F	1	JR350A	803A	X-DIM	SM( ) LTP // OR SMC // RCU	( )- 013 072 103 162	000 013 116 151 000 013 116 151	L	* SEE REM	SD5D075-01		DF								3		FORM PER ED5D503-30 G350A THIS IS A COST EFFECTIVENESS GROUP REPLACING DIRECTLY GROUP 80. WHEN UNIT IS EQPT IN VERT EQL 36, DROP LENGTH IS 6-0 (FROM CABLE RACKS) WHEN UNIT IS EQPT IN VERT EQL 45, DROP LENGTH IS 5-4 (FROM CABLE RACKS)
2200	85	4	JV221	728B	X-DIM	SM// SMC // OR M// TRCU	SEE TBL CJ	SEE TBL CJ	SEE TBL CJ1 OR CJ2	SEE TBL CJ1 OR CJ2	SD-5D086-01		COAX FEED-THRU BUS BAR								3 153 89		FORM PER ED5D505-30 G 221 'IN' CABLE *SEE TBL CJ FOR LENGTH LIMIT. NO STAMPING IS REQUIRED

COPYRIGHT @ 2001 LUCENT TECHNOLOGIES
ALL RIGHTS RESERVED

BT13

INTERCABINET CABLING
FOR
5ESS * SWITCH
*LUCENT TRADEMARK

DWG SIZE C2 | ISSUE 117

LUCENT TECHNOLOGIES INC | ED5D500-21 | SHEET A84 OF 292

PRINTED IN U.S.A.

CONNECTORIZED CABLING

ITEM	LIST OR GROUP	NBR RECD	CABLE IDENT	CABLE CODE	B DIM	FROM							TO							ROUTE	SHLD	NOTE	REMARKS
						FRAME OR UNIT	EQL	TERM	POS	DROP LGTH	WIRING DIAGRAM	FIGURE	FRAME OR UNIT	EQL	TERM	POS	DROP LGTH	WIRING DIAGRAM	FIGURE				
2210	85	4	JV221A	728B	X-DIM	COAX FEED-THRU BUS BAR	SEE TBL CJ						DSX3								3	153 89	FORM PER ED5D505-30 G221A *SEE TBL CJ FOR LENGTH LIMIT. NO STAMPING IS REQUIRED
2220	85	4	JV222	728B	X-DIM	SM// SMC // OR M// TRCU	SEE TBL CJ	SEE TBL CJ	SEE TBL CJ1 OR CJ2	SEE TBL CJ1 OR CJ2	SD-5D086-01		COAX FEED-THRU BUS BAR								3	153 89	FORM PER ED5D505-30 G 222 'OUT' CABLE *SEE TBL CJ FOR LENGTH LIMIT. NO STAMPING IS REQUIRED
2230	85	4	JV222A	728B	X-DIM	COAX FEED-THRU BUS BAR	SEE TBL CJ						DSX3								3	153 89	FORM PER ED5D505-30 G222A 'OUT' CABLE *SEE TBL CJ FOR LENGTH LIMIT. NO STAMPING IS REQUIRED
2235	85A	4	JV221B	728B	X-DIM	SM// SMC // OR M// TRCU	SEE TBL CJ	SEE TBL CJ	SEE TBL CJ1 OR CJ2	SEE TBL CJ1 OR CJ2	SD-5D086-01		COAX FEED-THRU BUS BAR								3	153 89	FORM PER ED5D505-30 G221B 'IN' CABLE 'SEE TBL CJ FOR LENGTH LIMIT. NO STAMPING IS REQUIRED.
2236	85A	4	JV221C	728B	X-DIM	C0AX FEED-THRU BUS BAR	SEE TBL CJ						DSX3								3	153 89	FORM PER ED5D505-30 G221C *SEE TBL CJ FOR LENGTH LIMIT. NO STAMPING IS REQUIRED.
2237	85A	4	JV222B	728B	X-DIM	SM// SMC // OR M// TRCU	SEE TBL CJ	SEE TBL CJ	SEE TBL CJ1 OR CJ2	SEE TBL CJ1 OR CJ2	SD-5D086-01		COAX FEED-THRU BUS BAR								3	153 89	FORM PER ED5D505-30 G222B 'OUT' CABLE *SEE TBL CJ FOR LENGTH LIMIT. NO STAMPING IS REQUIRED.
2238	85A	4	JV222C	728B	X-DIM	COAX FEED-THRU BUS BAR	SEE TBL CJ						DSX3								3	153 89	FORM PER ED5D505-30 G222C 'OUT' CABLE *SEE TBL CJ FOR LENGTH LIMIT. NO STAMPING IS REQUIRED.
2240	86	8	JV223	728B	RMKS	M// TRCU2 /HOST/ OR SM// SMC // TRCU2 /REM/	SEE TBL CK	SEE TBL CK	SEE TBL CK1 OR CK2	SEE TBL CK1 OR CK2	SD5D086-02		COAX FEED-THRU BUS BAR	SEE TBL CK	SEE TBL CK						3	95 98	FORM PER ED5D505-30 G 223 COMBINED LENGTH OF BOTH CABLES (JV223 AND JV223A) SHALL NOT EXCEED 450 FT.
2245	86	8	JV223A	728B	RMKS	COAX FEED-THRU BUS BAR	SEE TBL CK	SEE TBL CK			SD5D086-02		DSX3					SD96621-02			3	93 95	FORM PER ED5D505-30 G223A COMBINED LENGTH OF BOTH CABLES (JV223 AND JV223A) SHALL NOT EXCEED 450 FT.
2246	86A	8	JV225	734D	X-DIM	M// TRCU2 /HOST/ OR SM// SMC // TRCU2 /REM/	SEE TBL CK	SEE TBL CK	SEE TBL CK1 OR CK2	SEE TBL CK1 OR CK2	SD5D086-02		COAX FEED-THRU BUS BAR	SEE TBL CK	SEE TBL CK						3	95 98	FORM PER ED5D505-30 G 225 COMBINED LENGTH OF BOTH CABLES (JV225 AND JV225A) SHALL NOT EXCEED 450 FT.
2247	86A	8	JV225A	734D	X-DIM	COAX THRU BUS BAR	SEE CK	SEE CK			SD5D086-02		DSX3					SD96621-02			3	93 95	FORM PER ED5D505-30 G225A COMBINED LENGTH OF BOTH CABLES (JV225 AND JV225A) SHALL NOT EXCEED 450 FT.

COPYRIGHT @ 2001 LUCENT TECHNOLOGIES
ALL RIGHTS RESERVED

BT13

INTERCABINET CABLING
FOR
5ESS * SWITCH
*LUCENT TRADEMARK

DWG SIZE C2 | ISSUE 117

LUCENT TECHNOLOGIES INC | ED5D500-21 | SHEET A85 OF 292

PRINTED IN U.S.A.

CONNECTORIZED CABLING

ITEM	LIST OR GROUP	NBR RECD	CABLE IDENT	CABLE CODE	B DIM	FROM							TO							ROUTE	SHLD	NOTE	REMARKS
						FRAME OR UNIT	EQL	TERM	POS	DROP LGTH	WIRING DIAGRAM	FIGURE	FRAME OR UNIT	EQL	TERM	POS	DROP LGTH	WIRING DIAGRAM	FIGURE				
2250	87	1	JL131	LS1A-A	X-DIM	M// TRCU2 /HOST/ OR SM// SMC // TRCU2 /REM/	SEE TBL CL	SEE TBL CL	L	SEE TBL CL1	SD5D086-02		LGX (NON-LUCENT)								1	151 199	ID#180009185 E/W 103884904 8.3 MICRON YELLOW JACKETED TRANSMIT FO CABLE SEE NOTE 97 AND 151. SEE MISC TABLE T
2255	87	1	JL133	9860A3	X-DIM	M// TRCU2 /HOST/ OR SM// SMC // TRCU2 /REM/	SEE TBL CL	SEE TBL CL	L	SEE TBL CL1	SD5D086-02		LGX (NON-LUCENT)								1	199 66	FORM PER ED5D518-30 G 21 62.5 MICRON WHITE JACKETED FO RECEIVE CABLE REPL:ED5D518-30,G14 SEE MISC TABLE T
2260	87	1	JL132	LS1A-A	X-DIM	M// TRCU2 /HOST/ OR SM// SMC // TRCU2 /REM/	SEE TBL CL	SEE TBL CL	R	SEE TBL CL1	SD5D086-02		LGX (NON-LUCENT)								1	151 199	ID#180009185 E/W 103884904 8.3 MICRON YELLOW JACKETED TRANSMIT FO CABLE SEE NOTE 97 AND 151. SEE MISC TABLE T
2265	87	1	JL134	9860A3	X-DIM	M// TRCU2 /HOST/ OR SM// SMC // TRCU2 /REM/	SEE TBL CL	SEE TBL CL	R	SEE TBL CL1	SD5D086-02		LGX (NON-LUCENT)								1	199 66	FORM PER ED5D518-30 G 21 62.5 MICRON WHITE JACKETED FO RECEIVE CABLE REPL:ED5D518-30,G14 SEE MISC TABLE T
2270	87A	1	JL131	LS1A-A	X-DIM	M/ / TRCU2 /HOST/ OR SM/ / SMC // TRCU2 /REM/	SEE TBL CL	SEE TBL CL	L	SEE TBL CL1	SD5D086-02		LGX (NON-LUCENT)								1	151 199	ID# 180009185 E/W 103884904 8.3 MICRON YELLOW JACKETED TRANSMIT FO CABLE SEE NOTE 151. BICONIC TO SC. DA'D REPL BY ED5D500-21, G90 AND G91 SEE MISC TABLE T
2272	87A	1	JV132	LS1A-A	X-DIM	M/ / TRCU2 /HOST/ OR SM/ / SMC // TRCU2 /REM/	SEE TBL CL	SEE TBL CL	R	SEE TBL CL1	SD5D086-02		LGX (NON-LUCENT)								1	151 199	ID# 180009185 E/W 103884904 8.3 MICRON YELLOW JACKETED TRANSMIT FO CABLE SEE NOTE 151. BICONIC TO SC. DA'D REPL. BY ED5D500-21, G92 AND G93 SEE MISC TABLE T
2275	87B	1	JL133	9860A3	X-DIM	M/ / TRCU2 /HOST/ OR SM/ / SMC // TRCU2 /REM/	SEE TBL CL	SEE TBL CL	L	SEE TBL CL1	SD5D086-02		LGX (NON-LUCENT)								1	199 66	FORM PER ED5D518-30 G 21 62.5 MICRON WHITE JACKETED FO RECEIVE CABLE REPL:ED5D518-30,G14 DA'D REPL. BY ED5D500-21, G92 AND G93 SEE MISC TABLE T
2277	87B	1	JL134	9860A3	X-DIM	M/ / TRCU2 /HOST/ OR SM/ / SMC // TRCU2 /REM/	SEE TBL CL	SEE TBL CL	R	SEE TBL CL1	SD5D086-02		LGX (NON-LUCENT)								1	199 66	FORM PER ED5D518-30 G 21 62.5 MICRON WHITE JACKETED FO RECEIVE CABLE REPL:ED5D518-30,G14 DA'D REPL. BY ED5D500-21, G92 AND G93 SEE MISC TABLE T

COPYRIGHT @ 2001 LUCENT TECHNOLOGIES
ALL RIGHTS RESERVED

BT13

INTERCABINET CABLING
FOR
5ESS * SWITCH
*LUCENT TRADEMARK

DWG SIZE C2 | ISSUE 117

LUCENT TECHNOLOGIES INC | ED5D500-21 | SHEET A86 OF 292

PRINTED IN U.S.A.

CONNECTORIZED CABLING

ITEM	LIST OR GROUP	NBR RECD	CABLE IDENT	CABLE CODE	B DIM	FROM							TO							ROUTE	SHLD	NOTE	REMARKS
						FRAME OR UNIT	EQL	TERM	POS	DROP LGTH	WIRING DIAGRAM	FIGURE	FRAME OR UNIT	EQL	TERM	POS	DROP LGTH	WIRING DIAGRAM	FIGURE				
2280	88	1	JL131	LS1A-A	X-DIM	M/ / TRCU2 /HOST/ OR SM/ / SMC // TRCU2 /REM/	SEE TBL CL	SEE TBL CL	L	SEE TBL CL1	SD5D086-2		LGX (LUCENT BICONIC ONLY)								1	152 199	ID# 180009185 E/W 103884904 8.3 MICRON YELLOW JACKETED (MANUFACTURED IN ATLANTA, GA) (TRANSMIT CABLE) '0' SIDE SEE MISC TABLE T
2281	88	1	JL132	LS1A-A	X-DIM	M/ / TRCU2 /HOST/ OR SM/ / SMC // TRCU2 /REM/	SEE TBL CL	SEE TBL CL	R	SEE TBL CL1	SD5D086-2		LGX (LUCENT BICONIC ONLY)								1	152 199	ID# 180009185 E/W 103884904 8.3 MICRON YELLOW JACKETED (MANUFACTURED IN ATLANTA, GA) (TRANSMIT CABLE) '1' SIDE SEE MISC TABLE T
2282	89	1	JL133	1800B	X-DIM	M/ / TRCU2 /HOST/ OR SM/ / SMC // TRCU2 /REM/	SEE TBL CL	SEE TBL CL	L	SEE TBL CL1	SD5D086-2		LGX (LUCENT BICONIC ONLY)								1	199 66	FORM PER ED5D518-30 G 20 50 MICRON WHITE JACKETED FO (RECEIVE CABLE) '0' SIDE DA'D REPL. BY ED5D500-21, G94 AND G95 SE MISC TABLE T
2283	89	1	JL134	1800B	X-DIM	M/ / TRCU2 /HOST/ OR SM/ / SMC // TRCU2 /REM/	SEE TBL CL	SEE TBL CL	R	SEE TBL CL1	SD5D086-2		LGX (LUCENT BICONIC ONLY)								1	199 66	FORM PER ED5D518-30 G 20 50 MICRON WHITE JACKETED FO (RECEIVE CABLE) '1' SIDE DA'D REPL. BY ED5D500-21, G94 AND G95 SEE MISC TABLE T
2284	90	1	JL131	LS1A-SC	X-DIM	M/ / TRCU2 /HOST/ OR SM/ / SMC/ / TRCU2 /REM/	SEE TBL CL	SEE TBL CL	L	SEE TBL CL1	SD5D086-02		LGX (NON-LUCENT)								1	151 199	ID# 106469794 E/W 9000A3 COMCODE 106704703 8.3 MICRON TRANSMIT FO CABLE BICONIC TO SC CONNECTOR REPL: ED5D500-21, G87A SEE MISC TABLE T
2286	90	1	JL132	LS1A-SC	X-DIM	M/ / TRCU2 /HOST/ OR SM/ / SMC // TRCU2 /REM/	SEE TBL CL	SEE TBL CL	R	SEE TBL CL1	SD5D086-02		LGX (NON-LUCENT)								1	151 199	ID# 106469794 E/W 9000A3 COMCODE 106704703 8.3 MICRON TRANSMIT FO CABLE BICONIC TO SC CONNECTOR REPL: ED5D500-21, G87A SEE MISC TABLE T
2288	91	1	JL133	FS1E-A	X-DIM	M/ / TRCU2 /HOST/ OR SM/ / SMC // TRCU2 /REM/	SEE TBL CL	SEE TBL CL	L	SEE TBL CL1	SD5D086-02		LGX (NON-LUCENT)								1	151 199	ID# 106470834 E/W 9000A3 COMCODE 106704703 8.3 MICRON TRANSMIT FO CABLE BICONIC TO ST CONNECTOR REPL: ED5D500-21, G87A SEE MISC TABLE T
2290	91	1	JL134	FS1E-A	X-DIM	M/ / TRCU2 /HOST/ OR SM/ / SMC // TRCU2 /REM/	SEE TBL CL	SEE TBL CL	R	SEE TBL CL1	SD5D086-02		LGX (NON-LUCENT)								1	151 199	ID# 106470834 E/W 9000A3 COMCODE 106704703 8.3 MICRON TRANSMIT FO CABLE BICONIC TO ST CONNECTOR REPL: ED5D500-21, G87A SEE MISC TABLE T

COPYRIGHT @ 2001 LUCENT TECHNOLOGIES
ALL RIGHTS RESERVED

BT13

INTERCABINET CABLING
FOR
5ESS * SWITCH
*LUCENT TRADEMARK

DWG SIZE C2 | ISSUE 117

LUCENT TECHNOLOGIES INC | ED5D500-21 | SHEET A87 OF 292

PRINTED IN U.S.A.

CONNECTORIZED CABLING

ITEM	LIST OR GROUP	NBR RECD	CABLE IDENT	CABLE CODE	B DIM	FROM							TO							ROUTE	SHLD	NOTE	REMARKS
						FRAME OR UNIT	EQL	TERM	POS	DROP LGTH	WIRING DIAGRAM	FIGURE	FRAME OR UNIT	EQL	TERM	POS	DROP LGTH	WIRING DIAGRAM	FIGURE				
2292	92	1	JL131	LL1A-SC	X-DIM	M/ / TRCU2 /HOST/ OR SM/ / SMC // TRCU2 /REM/	SEE TBL CL	SEE TBL CL	L	SEE TBL CL1	SD5D086-02		LGX (NON-LUCENT)								1	199 66	ID# 106469588 E/W 9860A3 COMCODE 106762362 62.5 MICRON RECEIVE CABLE BICONIC TO SC CONNECTOR REPL: ED5D500-21, G87B SEE MISC TABLE T
2294	92	1	JL132	LL1A-SC	X-DIM	M/ / TRCU2 /HOST/ OR SM/ / SMC // TRCU2 /REM/	SEE TBL CL	SEE TBL CL	R	SEE TBL CL1	SD5D086-02		LGX (NON-LUCENT)								1	199 66	ID# 106469588 E/W 9860A3 COMCODE 106762362 62.5 MICRON RECEIVE CABLE BICONIC TO SC CONNECTOR REPL: ED5D500-21, G87B SEE MISC TABLE T
2296	93	1	JL133	FL1E-A	X-DIM	M/ / TRCU2 /HOST/ OR SM/ / SMC // TRCU2 /REM/	SEE TBL CL	SEE TBL CL	L	SEE TBL CL1	SD5D086-02		LGX (NON-LUCENT)								1	199 66	ID# 106471527 E/W 9860A3 COMCODE 106762362 62.5 MICRONS RECEIVE CABLE BICONIC TO ST CONNECTORS REPL:ED5D500-21, G87B SEE MISC TABLE T
2298	93	1	JL134	FL1E-A	X-DIM	M/ / TRCU2 /HOST/ OR SM/ / SMC // TRCU2 /REM/	SEE TBL CL	SEE TBL CL	R	SEE TBL CL1	SD5D086-02		LGX (NON-LUCENT)								1	199 66	ID# 106471527 E/W 9860A3 COMCODE 106762362 62.5 MICRON RECEIVE CABLE BICONIC TO ST CONNECTORS REPL:ED5D500-21,G87B SEE MISC TABLE T
2301	94	1	JL133	LL1A-A	X-DIM	M/ / TRCU2 /HOST/ OR SM/ / SMC // TRCU2 /REM/	SEE TBL CL	SEE TBL CL	L	SEE TBL CL1	SD5D086-2		LGX (LUCENT BICONIC ONLY)								1	199 66	ID# 106199987 E/W 9860A3 COMCODE 106762362 62.5 MICRON (RECEIVE CABLE) ’0’ SIDE BICONIC TO BICONIC CONNECTORS REPL: ED5D500-21, G89 SE MISC TABLE T
2303	94	1	JL134	LL1A-A	X-DIM	M/ / TRCU2 /HOST/ OR SM/ / SMC // TRCU2 /REM/	SEE TBL CL	SEE TBL CL	R	SEE TBL CL1	SD5D086-2		LGX (LUCENT BICONIC ONLY)								1	199 66	ID# 106199987 E/W 9860A3 62.5 MICRON (RECEIVE CABLE) ’1’ SIDE REPL: ED5D500-21, G89 SE MISC TABLE T
2305	95	1	JL133	FL1E-A	X-DIM	M/ / TRCU2 /HOST/ OR SM/ / SMC // TRCU2 /REM/	SEE TBL CL	SEE TBL CL	L	SEE TBL CL1	SD5D086-2		LGX (LUCENT BICONIC ONLY)								1	199 66	ID# 106471527 E/W 9860A3 COMCODE 106762362 62.5 MICRONS (RECEIVE CABLE) ’0’ SIDE BICONIC TO ST CONNECTORS REPL: ED5D500-21, G89 SE MISC TABLE T
2307	95	1	JL134	FL1E-A	X-DIM	M/ / TRCU2 /HOST/ OR SM/ / SMC // TRCU2 /REM/	SEE TBL CL	SEE TBL CL	R	SEE TBL CL1	SD5D086-2		LGX (LUCENT BICONIC ONLY)								1	199 66	ID# 106471527 E/W 9860A3 62.5 MICRONS (RECEIVE CABLE) ’1’ SIDE BICONIC TO ST CONNECTORS REPL: ED5D500-21, G89 SE MISC TABLE T
2310	100	1	JR100	808A	X-DIM	/*/	/*/- /*/	/*/	L/R	SEE TBL DA, DB			DF		TRW CONN 89M BLK						3		FORM PER ED5D503-32 G 100 * CABLE IS FOR A MISC EQPT. CAB,UNIT,EQL,TERM WILL BE JOB ENG’D.

COPYRIGHT @ 2001 LUCENT TECHNOLOGIES
ALL RIGHTS RESERVED

BT13

INTERCABINET CABLING
FOR
5ESS * SWITCH
*LUCENT TRADEMARK

CONNECTORIZED CABLING

ITEM	LIST OR GROUP	NBR RECD	CABLE IDENT	CABLE CODE	B DIM	FROM							TO							ROUTE	SHLD	NOTE	REMARKS
						FRAME OR UNIT	EQL	TERM	POS	DROP LGTH	WIRING DIAGRAM	FIGURE	FRAME OR UNIT	EQL	TERM	POS	DROP LGTH	WIRING DIAGRAM	FIGURE				
2400	103	1	JQ1	WP93746L1*	X-DIM	SM/ / LTP/ / OR SMC // MMSU/ /	/ /- 064	057	L	SEE TBL BT	SD-5D016-01		MN GRD BUS IN GRD WINDOW OR SUPL GRD BUS								4	94	FORM PER ED5D129-30 G 1 FOR SERVICE GROUP 0. SEE ED-5D022-11,FIG.16,FOR GRD BAR. * 16GA STRD, BK
2410	103	1	JQ3	WP93746L1*	X-DIM	SM/ / LTP/ / OR SMC // MMSU/ /	/ /- 126	057	L	SEE TBL BT	SD-5D016-01		MN GRD BUS IN GRD WINDOW OR SUPL GRD BUS								4	94	FORM PER ED5D129-30 G 1 FOR SERVICE GROUP 1 SEE ED-5D022-11,FIG.16,FOR GRD BAR. * 16GA STRD, BK
2420	104	1	JR53	808A	X-DIM	SM/ / LTP/ / OR SMC // MMSU/ / OR CSU/ /	/ /- / / SEE TBL CE	104 145 304 345 PER EQL	L	SEE TBL DA & DB	SD-5D016-01		DF								3		FORM PER ED5D503-30 G 53 FOR SG 0
2425	104A	1	JR53A	808A	X-DIM	SM/ / LTP/ / OR SMC // MMSU/ / OR CSU/ /	/ /- / / SEE TBL CE	104 145 304 345 PER EQL	L	SEE TBL DA & DB	SD-5D016-01		DF		711 CONN 89M BK						3		FORM PER ED5D503-30 G 53A FOR SG 0 89M TYPE DF BLK ONLY.
2426	104B	1	JR53B	808A	X-DIM	SM/ / LTP/ / OR SMC // MMSU/ / OR CSU/ /	/ /- / / SEE TBL CE	104 145 304 345 PER EQL	L	SEE TBL DA & DB	SD-5D016-01		DF		TRW CONN 89M BLK						3		FORM PER ED5D503-30 G 53B FOR SG 0 89M DF BLK ONLY.
2430	105	1	JR54	808A	X-DIM	SM/ / LTP/ / OR SMC // MMSU/ /	/ /- / / SEE TBL CE	104 145 304 345 PER EQL	R	SEE TBL DA & DB	SD-5D016-01		DF								3		FORM PER ED5D503-30 G 54 FOR SG 1
2435	105A	1	JR54A	808A	X-DIM	SM/ / LTP/ / OR SMC // MMSU/ /	/ /- / / SEE TBL CE	104 145 304 345 PER EQL	R	SEE TBL DA & DB	SD-5D16-01		DF		711 CONN 89M BK						3		FORM PER ED5D503-30 G 54A FOR SG 1 89M TYPE DF BLK ONLY.
2436	105B	1	JR54B	808A	X-DIM	SM/ / LTP/ / OR SMC // MMSU/ /	/ /- / / SEE TBL CE	104 145 304 345 PER EQL	R	SEE TBL DA & DB	SD-5D16-01		DF		TRW CONN 89M BLK						3		FORM PER ED5D503-30 G 54B FOR SG 1 89M TYPE DF BLK ONLY.

COPYRIGHT @ 2001 LUCENT TECHNOLOGIES
ALL RIGHTS RESERVED

BT13

INTERCABINET CABLING
FOR
5ESS * SWITCH
*LUCENT TRADEMARK

DWG SIZE C2 | ISSUE 117

PRINTED IN U.S.A.

CONNECTORIZED CABLING

ITEM	LIST OR GROUP	NBR RECD	CABLE IDENT	CABLE CODE	B DIM	FROM							TO							ROUTE	SHLD	NOTE	REMARKS
						FRAME OR UNIT	EQL	TERM	POS	DROP LGTH	WIRING DIAGRAM	FIGURE	FRAME OR UNIT	EQL	TERM	POS	DROP LGTH	WIRING DIAGRAM	FIGURE				
2440	106	1	JR50	276A	X-DIM	SM( ) LTP/ / OR SMC // MSU/ / OR MMSU/ / OR CSU/ /	( )- 042 OR ( )- 178 OR ( )- 088	313 313 313	L OR R	SEE TBL DA & DB	SD-5D016-01		SM( ) LTP/ / OR SMC // MSU/ / OR MMSU/ / OR CSU/ /	( )- 042 OR ( )- 178 OR ( )- 088	300 300 300	L OR R	SEE TBL DA & DB	SD-5D016-01			3	68	FORM PER ED5D503-30 G 50 FROM SUCCEEDING MSU (LEV 04) OR MMSU (BOTTOM UNIT) TO PROCEEDING MSU (LEV 13) OR MMSU (TOP UNIT) OR 1ST CSU TO 2ND CSU. (SEE NOTE 74)
2450	106	1	JR51	276A	X-DIM	SM( ) LTP/ / OR SMC // MSU/ / OR MMSU/ / OR CSU/ /	( )- 042 OR ( )- 178 OR ( )- 088	345 345 345	L OR R	SEE TBL DA & DB	SD-5D016-01		SM( ) LTP/ / OR SMC // MSU/ / OR MMSU/ / OR CSU/ /	( )- 042 OR ( )- 178 OR ( )- 088	332 332 332	L OR R	SEE TBL DA & DB	SD-5D016-01			3	68	FORM PER ED5D503-30 G 51 FROM SUCCEEDING MSU (LEV 04) OR MMSU (BOTTOM UNIT) TO PRECEDING MSU (LEV 13) OR MMSU (TOP UNIT) OR 1ST CSU TO 2ND CSU. (SEE NOTE 74)
2460	107	1	JR42	285A	X-DIM	SM( ) LTP/ / OR SMC // MMSU/ /	/J1/, ( )- ( ) /J2/ ( )- ( ) SEE TBL CC	154 154		SEE TBL DA & DB	SD-5D016-01		DF								3		
2470	109	1	JR41	285A	X-DIM	SM( ) LTP/ / OR SMC // MMSU/ /	/J1/ ( )- ( )	( ) SEE TBL CF	SEE TBL CF	SEE TBL DA & DB	SD-5D016-01		DF								3		
2480	109A	1	JR41A	285A	X-DIM	SM() LTP// OR SMC // MMSU//	/J1/ ( )- ( )	( ) SEE TBL CF1	L OR R	SEE TBL DA & DB	SD-5D016-01		DF								3	80	
2490	110	1	JR44	812A	X-DIM	SM( ) LTP/ / OR SMC // MMSU/ /	( )- ( ) SEE TBL CE1	307	SEE TBL CE1	TBL DA, DB	SD-5D016-01		DF								3		

COPYRIGHT @ 2001 LUCENT TECHNOLOGIES
ALL RIGHTS RESERVED

BT13

INTERCABINET CABLING
FOR
5ESS * SWITCH
*LUCENT TRADEMARK

DWG SIZE C2 | ISSUE 117

LUCENT TECHNOLOGIES INC | ED5D500-21 | SHEET A90 OF 292

PRINTED IN U.S.A.

CONNECTORIZED CABLING

ITEM	LIST OR GROUP	NBR RECD	CABLE IDENT	CABLE CODE	B DIM	FROM							TO							ROUTE	SHLD	NOTE	REMARKS
						FRAME OR UNIT	EQL	TERM	POS	DROP LGTH	WIRING DIAGRAM	FIGURE	FRAME OR UNIT	EQL	TERM	POS	DROP LGTH	WIRING DIAGRAM	FIGURE				
2600	120	1	JR101	810A	X-DIM	SM/ / LTP/ / OR SMC // TU/ / OR ATU-E//	/ /- 032 / /- 040 / /- 048 / /- 056 / /- 064 / /- 072 / /- 080 / /- 088 / /- 124 / /- 132 / /- 140 / /- 148 / /- 156 / /- 164 / /- 172 / /- 180	117 117 117 117 117 117 117 117 117 117 117 117 117 117 117 117 117	L	SEE TBL BA	SD-5D300-01 OR SD-5X203-01		DF		CONN 711						3	90	FORM PER ED5D503-30 G 101 (T,R,T1,R1 LDS) NO STAMPING IS REQUIRED.
2610	120	1	JR102	810A	X-DIM	SM/ / LTP/ / OR SMC // TU/ / OR ATU-E//	/ /- 032 / /- 040 / /- 048 / /- 056 / /- 064 / /- 072 / /- 080 / /- 088 / /- 124 / /- 132 / /- 140 / /- 148 / /- 156 / /- 164 / /- 172 / /- 180	104 104 104 104 104 104 104 104 104 104 104 104 104 104 104 104 104	R	SEE TBL BA	SD-5D300-01 OR SD-5X203-01		DF		CONN 711						3	83 86 90	FORM PER ED5D503-30 G 102 (E,SG,M,SB LDS) NO STAMPING REQUIRED.

COPYRIGHT @ 2001 LUCENT TECHNOLOGIES
ALL RIGHTS RESERVED

BT13

INTERCABINET CABLING
FOR
5ESS * SWITCH
*LUCENT TRADEMARK

DWG SIZE C2 | ISSUE 117

PRINTED IN U.S.A.

CONNECTORIZED CABLING

ITEM	LIST OR GROUP	NBR RECD	CABLE IDENT	CABLE CODE	B DIM	FROM							TO							ROUTE	SHLD	NOTE	REMARKS
						FRAME OR UNIT	EQL	TERM	POS	DROP LGTH	WIRING DIAGRAM	FIGURE	FRAME OR UNIT	EQL	TERM	POS	DROP LGTH	WIRING DIAGRAM	FIGURE				
2620	120A	1	JR101A	810A	X-DIM	SM/ / LTP/ / OR SMC // TU/ / OR ATU-E//	/ /- 032 / /- 040 / /- 048 / /- 056 / /- 064 / /- 072 / /- 080 / /- 088 / /- 124 / /- 132 / /- 140 / /- 148 / /- 156 / /- 164 / /- 172 / /- 180	117 117 117 117 117 117 117 117 117 117 117 117 117 117 117 117 117	L	SEE TBL BH	SD-5D300-01 OR SD-5X203-01		DF		SWC						3	90	FORM PER ED5D503-35 G101A (T,R,T1,R1 LDS) NO STAMPING REQUIRED.
2630	120A	1	JR102A	810A	X-DIM	SM/ / LTP/ / OR SMC // TU/ / OR ATU-E//	/ /- 032 / /- 040 / /- 048 / /- 056 / /- 064 / /- 072 / /- 080 / /- 088 / /- 124 / /- 132 / /- 140 / /- 148 / /- 156 / /- 164 / /- 172 / /- 180	104 104 104 104 104 104 104 104 104 104 104 104 104 104 104 104 104	R	SEE TBL BH	SD-5D300-01 OR SD-5X203-01		DF		SWC						3	83 86 90	FORM PER ED5D503-35 G102A (E,SG,M,SB LDS) NO STAMPING REQUIRED.

COPYRIGHT @ 2001 LUCENT TECHNOLOGIES
ALL RIGHTS RESERVED

BT13

INTERCABINET CABLING
FOR
5ESS * SWITCH
*LUCENT TRADEMARK

DWG SIZE C2 | ISSUE 117

PRINTED IN U.S.A.

CONNECTORIZED CABLING

ITEM	LIST OR GROUP	NBR RECD	CABLE IDENT	CABLE CODE	B DIM	FROM							TO							ROUTE	SHLD	NOTE	REMARKS
						FRAME OR UNIT	EQL	TERM	POS	DROP LGTH	WIRING DIAGRAM	FIGURE	FRAME OR UNIT	EQL	TERM	POS	DROP LGTH	WIRING DIAGRAM	FIGURE				
2635	121	1	JR103	810A	X-DIM	SM/ / LTP/ / OR SMC // TU/ / OR ATU-E//	/ /- 032 / /- 040 / /- 048 / /- 056 / /- 064 / /- 072 / /- 080 / /- 088 / /- 124 / /- 132 / /- 140 / /- 148 / /- 156 / /- 164 / /- 172 / /- 180	117 117 117 117 117 117 117 117 117 117 117 117 117 117 117 117	L	SEE TBL BA	SD-5D300-01 OR SD-5X203-01		DF		CONN 711						3	90	FORM PER ED5D503-32 G 103 (T,R,T1,R1 LDS) NO STAMPING IS REQUIRED. (89M BLKS ONLY)
2636	121	1	JR104	810A	X-DIM	SM/ / LTP/ / OR SMC // TU/ / OR ATU-E//	/ /- 032 / /- 040 / /- 048 / /- 056 / /- 064 / /- 072 / /- 080 / /- 088 / /- 124 / /- 132 / /- 140 / /- 148 / /- 156 / /- 164 / /- 172 / /- 180	104 104 104 104 104 104 104 104 104 104 104 104 104 104 104 104	R	SEE TBL BA	SD-5D300-01 OR SD-5X203-01		DF		CONN 711						3	83 86 90	FORM PER ED5D503-32 G 104 (E,SG,M,SB LDS) NO STAMPING REQUIRED. (89M BLKS ONLY)

COPYRIGHT @ 2001 LUCENT TECHNOLOGIES
ALL RIGHTS RESERVED

BT13

INTERCABINET CABLING
FOR
5ESS * SWITCH
*LUCENT TRADEMARK

DWG SIZE C2 | ISSUE 117

PRINTED IN U.S.A.

CONNECTORIZED CABLING

ITEM	LIST OR GROUP	NBR RECD	CABLE IDENT	CABLE CODE	B DIM	FROM							TO							ROUTE	SHLD	NOTE	REMARKS
						FRAME OR UNIT	EQL	TERM	POS	DROP LGTH	WIRING DIAGRAM	FIGURE	FRAME OR UNIT	EQL	TERM	POS	DROP LGTH	WIRING DIAGRAM	FIGURE				
2637	121B | |	1	JR103B	810A	X-DIM	SM/ / LTP/ / OR SMC // TU/ / OR ATU-E//	/ /- 032 / /- 040 / /- 048 / /- 056 / /- 064 / /- 072 / /- 080 / /- 088 / /- 124 / /- 132 / /- 140 / /- 148 / /- 156 / /- 164 / /- 172 / /- 180	117 117 117 117 117 117 117 117 117 117 117 117 117 117 117 117 117	L	SEE TBL BA	SD-5D300-01 OR SD-5X203-01		DF		TRW CONN						3	90	FORM PER ED5D503-32 G103B (T,R,T1,R1 LDS) NO STAMPING REQUIRED. (89M BLKS ONLY)
2638	121B |	1	JR104B	810A	X-DIM	SM/ / LTP/ / OR SMC // TU/ / OR ATU-E//	/ /- 032 / /- 040 / /- 048 / /- 056 / /- 064 / /- 072 / /- 080 / /- 088 / /- 124 / /- 132 / /- 140 / /- 148 / /- 156 / /- 164 / /- 172 / /- 180	104 104 104 104 104 104 104 104 104 104 104 104 104 104 104 104 104	R	SEE TBL BA	SD-5D300-01 OR SD-5X203-01		DF		TRW CONN						3	83 86 90	FORM PER ED5D503-32 G104B (E,SG,M,SB LDS) NO STAMPING REQUIRED. (89M BLKS ONLY)
2640	122 |	1	JR33	285A	X-DIM	SM( ) LTP/ / OR SMC // TU/ / OR ATU-E//	/J3/ ( )- 108	109	L	SEE TBL BA	SD-5D300-01 OR SD-5X203-01		SM( ) LTP/ / OR SMC // MMSU/ /	/J1/ ( )- ( ) /J2/ ( )- ( )	( ) ( ) SEE TBL CC	L	SEE TBL DA & DB	SD-5D016-01			3		

COPYRIGHT @ 2001 LUCENT TECHNOLOGIES
ALL RIGHTS RESERVED

BT13

INTERCABINET CABLING
FOR
5ESS * SWITCH
*LUCENT TRADEMARK

DWG SIZE C2 | ISSUE 117

LUCENT TECHNOLOGIES INC | ED5D500-21 | SHEET A94 OF 292

PRINTED IN U.S.A.

CONNECTORIZED CABLING

ITEM	LIST OR GROUP	NBR RECD	CABLE IDENT	CABLE CODE	B DIM	FROM							TO							ROUTE	SHLD	NOTE	REMARKS
						FRAME OR UNIT	EQL	TERM	POS	DROP LGTH	WIRING DIAGRAM	FIGURE	FRAME OR UNIT	EQL	TERM	POS	DROP LGTH	WIRING DIAGRAM	FIGURE				
2645	122A	1	JR33A	285A	X-DIM	SM( ) LTP// OR SMC // ATU-E//	/J3/ ( )- ( ) SEE TBL BA4	103	L	SEE TBL BA4	SD5X203-01		SM( ) LTP// OR SMC // MMSU//	/J1/ ( )- ( ) /J2/ ( )- ( ) SEE TBL CC	( ) ( ) SEE TBL CC	L	SEE TBL DA & DB	SD5D016-01			3	83	
2650	123 |	1	JR34	285A	X-DIM	SM( ) LTP/ / OR SMC // TU/ / OR ATU-E//	/J3/ ( )- 108	109	R	SEE TBL BA	SD-5D300-01 OR SD-5X203-01		SM( ) LTP/ / OR SMC // MMSU/ /	/J1/ ( )- ( ) /J2/ ( )- ( )	( ) ( ) SEE TBL CC	R	SEE TBL DA & DB	SD-5D016-01			3		
2655	123A	1	JR34A	285A	X-DIM	SM( ) LTP// OR SMC // ATU-E//	/J3/ ( )- ( ) SEE TBL BA4	103	R	SEE TBL BA4	SD5X203-01		SM( ) LTP// OR SMC // MMSU//	/J1/ ( )- ( ) /J2/ ( )- ( ) SEE TBL CC	( ) ( ) SEE TBL CC	R	SEE TBL DA & DB	SD5D016-01			3	83	
2660	124 | |	1	JR35	285A	X-DIM	SM( ) LTP/ / OR SMC // TU/ / OR ATU-E()	/J3/ ( )- ( ) SEE TBL CD	104	L	SEE TBL DA & DB	SD-5D300-01 OR SD-5X203-01		SM( ) LTP/ / OR SMC // MMSU/ /	/J1/ ( )- ( ) /J2/ ( )- ( )	( ) ( ) SEE TBL CC	L	SEE TBL DA & DB	SD-5D016-01			3	86	
2670	125 |	1	JR36	285A	X-DIM	SM( ) LTP/ / OR SMC // TU/ / OR ATU-E//	/J3/ ( )- ( ) SEE TBL CD	104	R	SEE TBL DA & DB	SD-5D300-01 OR SD-5X203-01		SM( ) LTP/ / SMC // MMSU/ /	/J1/ ( )- ( ) /J2/ ( )- ( )	( ) ( ) SEE TBL CC	R	SEE TBL DA & DB	SD-5D016-01			3	86	
2680	126	1	JR105	KS-13385,L1*	X-DIM	SM/ / LTP/ / OR SMC // ATU/ / EXPORT	/ /, 014 / /- 085	OBO OBO	L	SEE TBL BA	SD-5X203-01		M / / FUSE PANEL /0-4/	SEE TBL DD	SEE TBL DD	L	SEE TBL DD	SD-5D130-01			4		FORM PER ED5D503-30 G 105 +48V & RTN BUS 0 MAX. LENGTH OF 150' *16GA STRD, S,S-BK PAIR WIRE NO STAMPING REQUIRED
2690	126	1	JR106	KS-13385,L1*	X-DIM	SM / / LTP/ / OR SMC // ATU/ / EXPORT	/ /- 106 / /- 177	OBO OBO	R	SEE TBL BA	SD-5X203-01		M / / FUSE PANEL /0-4/	SEE TBL DD	SEE TBL DD	R	SEE TBL DD	SD-5D130-01			4		FORM PER ED5D503-30 G 106 +48V & RTN BUS 1 MAX. LENGTH OF 150'. *16GA STRD, S,S-BK PAIR WIRE NO STAMPING REQUIRED
2700	127	1	JR107	WP93746L1*	X-DIM	SM/ / LTP/ / OR SMC // ATU/ / EXPORT	/ /- 014 / /- 085	OBO OBO	L	SEE TBL BA	SD-5X203-01		M / / FUSE PANEL /0-4/	SEE TBL DD	SEE TBL DD	L	SEE TBL DD	SD-5D130-01			4		FORM PER ED5D503-30 G 107 +48V & RTN BUS 0 CA LENGTH GREATER THAN 150'. *14GA STRD, S,S-BK PAIR WIRE. NO STAMPING REQUIRED

COPYRIGHT @ 2001 LUCENT TECHNOLOGIES
ALL RIGHTS RESERVED

BT13

INTERCABINET CABLING
FOR
5ESS * SWITCH
*LUCENT TRADEMARK

DWG SIZE C2 | ISSUE 117

LUCENT TECHNOLOGIES INC | ED5D500-21 | SHEET A95 OF 292

PRINTED IN U.S.A.

CONNECTORIZED CABLING

ITEM	LIST OR GROUP	NBR RECD	CABLE IDENT	CABLE CODE	B DIM	FROM							TO							ROUTE	SHLD	NOTE	REMARKS
						FRAME OR UNIT	EQL	TERM	POS	DROP LGTH	WIRING DIAGRAM	FIGURE	FRAME OR UNIT	EQL	TERM	POS	DROP LGTH	WIRING DIAGRAM	FIGURE				
2710	127	1	JR108	WP93746L1*	X-DIM	SM/ / LTP/ / OR SMC // ATU/ / EXPORT	/ /- 106 / /- 177	OBO OBO	R	SEE TBL BA	SD-5X203-01		M / / FUSE PANEL /0-4/	SEE TBL DD	SEE TBL DD	R	SEE TBL DD	SD-5D130-01			4		FORM PER ED5D503-30 G 108 +48V & RTN BUS 1 CA LENGTH GREATER THAN 150'. *14GA STRD, S,S-BK PAIR WIRE. NO STAMPING REQUIRED
2720	128	1	JQ7	KS-13385,L1*	X-DIM	M / / CONV PNL 0	043-	GRD	R	4-6 /R/ 6-5 /P/	SD-5D070-01		MN GRD BUS IN GRD WINDOW OR SUPL BUS								4	94	FORM PER ED5D129-30 G 2 *10GA STRD, BK WIRE
2730	128A	1	JV197	812A	X-DIM	M / / CONV PNL 0	043-	/TB 2/	R	4-3 /R/ 6-7 /P/	SD-5D070-01		DF								3	199 59	BULK CABLE SEE MISC TABLE T
2740	129	1	JR111	808A	X-DIM	SM( ) LTP// ATU-E OR SMC1	( )- 080 ( )- 088 ( )- 172 ( )- 180	117 PER EQL	L	SEE TBL BA1	SD5X203-01		DF								3		FORM PER ED5D503-30 G 111 T,R,T1,R1 CABLE
2750	129	1	JR112	808A	X-DIM	SM( ) LTP// ATU-E OR SMC1	( )- 080 ( )- 088 ( )- 172 ( )- 180	104 PER EQL	R	SEE TBL BA1	SD5X203-01		DF								3		FORM PER ED5D503-30 G 112 E,SG,M,SB CABLE
2760	129A	1	JR113	1249012A	X-DIM	SM( ) LTP// ATU-E OR SMC1	( )- ( ) SEE TBL BA2	117	SEE TBL BA2	SEE TBL BA2	SD5X203-01		DS( )	( )- ( )		L/R		SD5D071-01			3		FORM PER ED5D503-30 G 113 ONE CABLE FOR ONE V.35 LINE. MAX LENGTH OF CABLE IS 100 FEET.
2770	129B	1	JR114	816A	X-DIM	SM( ) LTP// ATU-E OR SMC1	( )- ( ) SEE TBL BA3	104	SEE TBL BA3	SEE TBL BA3	SD5X203-01		DS( )	( )- ( )		L/R					3		FORM PER ED5D503-30 GG114 ONE CABLE FOR ONE V.24 LINE MAX LENGTH OF CABLE IS 50 FEET.
2771	129C	1	JN9	812A	X-DIM	DATA MTG	/ /- / /						DF								3		
2772	129D	1	JN17	272R2	X-DIM	M/ / DATA MTG	/ /- / /		L/R				DF								3		
2773	129E	1	JN9B	808A	X-DIM	DS()	( )- ( )		L/R				DF								3		FORM PER ED5D517-30 G 9B PARADYNE MOTHER BOARD OR EQUIV.
2775	129F	1	JN21	812A	X-DIM	DS( ) F/F	068- 043	510	L	1-7 /R/ 7-10 /P/	SD5X215-01		DF								3		

COPYRIGHT @ 2001 LUCENT TECHNOLOGIES
ALL RIGHTS RESERVED

BT13

INTERCABINET CABLING
FOR
5ESS * SWITCH
*LUCENT TRADEMARK

DWG SIZE C2 | ISSUE 117

PRINTED IN U.S.A.

CONNECTORIZED CABLING

ITEM	LIST OR GROUP	NBR RECD	CABLE IDENT	CABLE CODE	B DIM	FROM							TO							ROUTE	SHLD	NOTE	REMARKS
						FRAME OR UNIT	EQL	TERM	POS	DROP LGTH	WIRING DIAGRAM	FIGURE	FRAME OR UNIT	EQL	TERM	POS	DROP LGTH	WIRING DIAGRAM	FIGURE				
2800	130	1	JR301	$607B$ 607C	X-DIM	SM( ) LTP/ / OR SMC // DLTU/ /	( )- /006/ P1		L	SEE TBL BA	SD-5D201-01		DSX								3	87	FORM PER ED5D503-30 G 301 MAXIMUM LENGTH SHALL NOT EXCEED 655 FEET.
2810	130	1	JR303	$607B$ 607C	X-DIM	SM( ) LTP/ / OR SMC // DLTU//	( )- /006/ P2		L	SEE TBL BA	SD-5D201-01		DSX								3	87	FORM PER ED5D503-30 G 303 MAXIMUM LENGTH SHALL NOT EXCEED 655 FEET.
2815	130A	1	JR301A	$607B$ 607C	X-DIM	SM( ) LTP// OR SMC // DLTU //	( )- 010	113 132 145	L	SEE TBL BA	SD5D201-02		DSX								3		FORM PER ED5D503-30 G301A MAXIMUM LENGTH SHALL NOT EXCEED 655 FEET.
2816	130A	1	JR303A	$607B$ 607C	X-DIM	SM( ) LTP// OR SMC // DLTU //	( )- 018	113 132 145	L	SEE TBL BA	SD5D201-02		DSX								3		FORM PER ED5D503-30 G303A MAXIMUM LENGTH SHALL NOT EXCEED 655 FEET.
2817	130B	1	JR301B	1249012C	X-DIM	SM() LTP// OR SMC // DLTU//	( )- /006/ J1		L	SEE TBL BA	SD5D201-01		DSX								3	87	FORM PER ED5D503-32 G301B MAX LENGTH SHALL NOT EXCEED 450 FEET.
2819	130B	1	JR303B	1249012C	X-DIM	SM() LTP// OR SMC // DLTU//	( )- /006/ J2		L	SEE TBL BA	SD5D201-01		DSX								3	87	FORM PER ED5D503-32 G303B MAX LENGTH SHALL NOT EXCEED 450 FEET.
2820	130C	1	JR301C	1249012C	X-DIM	SM() LTP// OR SMC // DLTU//	( )- 010	113 132 145	L	SEE TBL BA	SD5D201-02		DSX								3		FORM PER ED5D503-32 G301C MAX LENGTH SHALL NOT EXCEED 450 FEET.
2821	130C	1	JR303C	1249012C	X-DIM	SM() LTP// OR SMC // DLTU//	( )- 018	113 132 145	L	SEE TBL BA	SD5D201-02		DSX								3		FORM PER ED5D503-32 G303C MAX LENGTH SHALL NOT EXCEED 450 FEET.
2829	131	1	JR331	807A	X-DIM	SM( ) LTP/ / OR SMC // DLTU-E / /	( )- /006/ J1		L	SEE TBL BA	SD-5X204-01		DSX								3	87	FORM PER ED5D503-30 G 331 (MAX. CABLE LENGTH SHALL NOT EXCEED 655 FEET). (2048 KBIT/S EQPT)
2830	131	1	JR333	807A	X-DIM	SM( ) LTP/ / OR SMC // DLTU-E / /	( )- /006/ J2		L	SEE TBL BA	SD-5X204-01		DSX								3	87	FORM PER ED5D503-30 G 333 (MAX. CABLE LENGTH SHALL NOT EXCEED 655 FEET). (2048 KBIT/S EQPT)

COPYRIGHT @ 2001 LUCENT TECHNOLOGIES
ALL RIGHTS RESERVED

BT13

INTERCABINET CABLING
FOR
5ESS * SWITCH
*LUCENT TRADEMARK

DWG SIZE C2 | ISSUE 117

PRINTED IN U.S.A.

CONNECTORIZED CABLING

ITEM	LIST OR GROUP	NBR RECD	CABLE IDENT	CABLE CODE	B DIM	FROM							TO							ROUTE	SHLD	NOTE	REMARKS
						FRAME OR UNIT	EQL	TERM	POS	DROP LGTH	WIRING DIAGRAM	FIGURE	FRAME OR UNIT	EQL	TERM	POS	DROP LGTH	WIRING DIAGRAM	FIGURE				
2832	131A	1	JR750	807A	X-DIM	SM() LTP// DLTUE// OR SMC1	(*)- 019- 029- 039- 049- 059- 069- 079- 089- 099- 109- 119- 129- 139- 149- 159- 169-	 132 132 132 132 132 132 132 132 132 132 132 132 132 132 132 132	L	SEE TBL BB3	SD5X204-01		DSX								3		FORM PER ED5D503-30 G 750 SEE TBL A1 DLTU - EXPORT (1 CKT) DFI'S CIRCUIT A ONLY (DFI 1-16). (IN) 963T TYPE CONNECTORS TERMINATE AT EACH DFI.
2833	131A	1	JR750A	807A	X-DIM	SM() LTP// DLTUE// OR SMC1	(*)- 019- 029- 039- 049- 059- 069- 079- 089- 099- 109- 119- 129- 139- 149- 159- 169-	 122 122 122 122 122 122 122 122 122 122 122 122 122 122 122 122	L	SEE TBL BB3	SD5X204-01		DSX								3		FORM PER ED5D503-30 G750A SEE TBL A1 DLTU - EXPORT (1 CKT) DFI'S CIRCUIT A ONLY (DFI 1-16). (OUT) 963T TYPE CONNECTORS TERMINATE AT EACH DFI.
2840	132	1	JR335	801AS	X-DIM	SM( ) LTP/ / OR SMC // DLTU-E / /	( )- /006/ J1		L	SEE TBL BA	SD-5X204-01		DSX								3	87	FORM PER ED5D503-30 G 335 (MAX. CABLE LENGTH SHALL NOT EXCEED 655 FEET). (2048 KBIT/S EQPT)
2850	132	1	JR337	801AS	X-DIM	SM( ) LTP/ / OR SMC // DLTU-E / /	( )- /006/ J2		L	SEE TBL BA	SD-5X204-01		DSX								3	87	FORM PER ED5D503-30 G 337 (MAX. CABLE LENGTH SHALL NOT EXCEED 655 FEET). (2048 KBIT/S EQPT)
2852	132A	1	JR752	1249016A	X-DIM	SM() LTP// DLTUE// OR SMC1	(*)- 019- 029- 039- 049- 059- 069- 079- 089- 099- 109- 119- 129- 139- 149- 159- 169-	 132 132 132 132 132 132 132 132 132 132 132 132 132 132 132 132	L	SEE TBL BB3	SD5X204-01		DSX								3		FORM PER ED5D503-30 G 752 SEE TBL A1 DLTU - EXPORT (1 CKT) DFI'S CIRCUIT A ONLY (DFI 1-16). (IN) 963T TYPE CONNECTORS TERMINATE AT EACH DFI.

COPYRIGHT @ 2001 LUCENT TECHNOLOGIES
ALL RIGHTS RESERVED

BT13

INTERCABINET CABLING
FOR
5ESS * SWITCH
*LUCENT TRADEMARK

DWG SIZE C2 | ISSUE 117

PRINTED IN U.S.A.

CONNECTORIZED CABLING

ITEM	LIST OR GROUP	NBR RECD	CABLE IDENT	CABLE CODE	B DIM	FROM							TO							ROUTE	SHLD	NOTE	REMARKS
						FRAME OR UNIT	EQL	TERM	POS	DROP LGTH	WIRING DIAGRAM	FIGURE	FRAME OR UNIT	EQL	TERM	POS	DROP LGTH	WIRING DIAGRAM	FIGURE				
2853	132A	1	JR752A	1249016A	X-DIM	SM() LTP// DLTUE// OR SMC1	(*)- 019- 029- 039- 049- 039- 039- 049- 059- 069- 079- 089- 099- 109- 119- 129- 139- 149- 159- 169- 129-	 122 122 122 122 132 122 122 122 122 122 122 122 122 122 122 122 122 122 122 132 122	L	SEE TBL BB3	SD5X204-01		DSX								3		FORM PER ED5D503-30 G752A SEE TBL A1 DLTU - EXPORT (1 CKT) DFI'S CIRCUIT A ONLY (DFI 1-16). (OUT) 963T TYPE CONNECTORS TERMINATE AT EACH DFI.
2860	133	1	JR339	KS-19224,L1	X-DIM	SM( ) LTP/ / OR SMC // DLTU-E / /	( )- ( )	J( )	* REM	SEE TBL CX	SD-5X204-01		DSX								3		FORM PER ED5D503-30 G 339 (MAX. CABLE LENGTH SHALL NOT EXCEED 655 FEET). * POSITION IS "LEFT" FOR DFI 1-8 AND "RIGHT" FOR DFI 9-16 (AS SPECIFIED). (2048 KBIT/S EQPT)
2870	133	1	JR341	KS-19224,L1	X-DIM	SM( ) LTP/ / OR SMC // DLTU-E / /	( )- ( )	J( )	* REM	SEE TBL CX	SD-5X204-01		DSX								3		FORM PER ED5D503-30 G 341 (MAX. CABLE LENGTH SHALL NOT EXCEED 655 FEET). * POSITION IS "LEFT" FOR DFI 1-8 AND "RIGHT" FOR DFI 9-16 (AS SPECIFIED). (2048 KBIT/S EQPT)
2872	133A	1	JR339A	735A	X-DIM	SM( ) LTP/ / OR SMC // DLTU-E / /	( )- ( )	J( )	* REM	SEE TBL CX	SD-5X204-01		DSX								3		FORM PER ED5D503-30 G339A (MAX. CABLE LENGTH SHALL NOT EXCEED 655 FEET). * POSITION IS "LEFT" FOR DFI 1-8 AND "RIGHT" FOR DFI 9-16 (AS SPECIFIED). (2048 KBIT/S EQPT) (FOR DSX REQUIRING 4MM CA TERMINATION)
2873	133A	1	JR341A	735A	X-DIM	SM( ) LTP/ / OR SMC // DLTU-E / /	( )- ( )	J( )	* REM	SEE TBL CX	SD-5X204-01		DSX								3		FORM PER ED5D503-30 G341A (MAX. CABLE LENGTH SHALL NOT EXCEED 655 FEET). * POSITION IS "LEFT" FOR DFI 1-8 AND "RIGHT" FOR DFI 9-16 (AS SPECIFIED). (2048 KBIT/S EQPT) (FOR DSX REQUIRING 4MM CA TERMINATION)
2875	133B	1	JR754	735A	X-DIM	SM() LTP/ / OR SMC // DLTU-E / /	( )- ( ) SEE TBL CX2	132			SD5X204-01		DSX								3		FORM PER ED5D503-30 G 754 (MAX CABLE LENGTH SHALL NOT EXCEED 655 FT).(IN)
2877	133B	1	JR754A	735A	X-DIM	SM() LTP/ / OR SMC // DLTU-E / /	( )- ( ) SEE TBL CX2	106			SD5X204-01		DSX								3		FORM PER ED5D503-30 G754A (MAX CABLE LENGTH SHALL NOT EXCEED 655 FT).(OUT)

COPYRIGHT @ 2001 LUCENT TECHNOLOGIES
ALL RIGHTS RESERVED

BT13

INTERCABINET CABLING
FOR
5ESS * SWITCH
*LUCENT TRADEMARK

DWG SIZE C2 | ISSUE 117

PRINTED IN U.S.A.

CONNECTORIZED CABLING

ITEM	LIST OR GROUP	NBR RECD	CABLE IDENT	CABLE CODE	B DIM	FROM							TO							ROUTE	SHLD	NOTE	REMARKS
						FRAME OR UNIT	EQL	TERM	POS	DROP LGTH	WIRING DIAGRAM	FIGURE	FRAME OR UNIT	EQL	TERM	POS	DROP LGTH	WIRING DIAGRAM	FIGURE				
2879	133C	1	JR756	KS19224L1	X-DIM	SM() LTP/ / OR SMC // DLTU-E / /	( )- ( ) SEE TBL CX2	132			SD5X204-01		DSX								3		FORM PER ED5D503-30 G 756 (MAX CABLE LENGTH SHALL NOT EXCEED 655 FT).(IN)
2881	133C	1	JR756A	KS19224L1	X-DIM	SM() LTP/ / OR SMC // DLTU-E / /	( )- ( ) SEE TBL CX2	106			SD5X204-01		DSX								3		FORM PER ED5D503-30 G756A (MAX CABLE LENGTH SHALL NOT EXCEED 655 FT).(OUT)
2890	134	1	JR311	$607B$ 607C	X-DIM	SM( ) LTP/ / OR SMC // DCLU//	( )- 006 P1		L	SEE TBL BB	SD-5D202-01		DSX								3	87	FORM PER ED5D503-30 G 311 MAXIMUM LENGTH SHALL NOT EXCEED 655 FEET. UNIT LEV 04.
2900	134	1	JR313	$607B$ 607C	X-DIM	SM( ) LTP/ / OR SMC // DCLU//	( )- 006 P2		L	SEE TBL BB	SD-5D202-01		DSX								3	87	FORM PER ED5D503-30 G 313 MAXIMUM LENGTH SHALL NOT EXCEED 655 FEET UNIT LEV 04.
2910	134	1	JR315	$607B$ 607C	X-DIM	SM( ) LTP/ / OR SMC // DCLU//	( )- 006 P3		L	SEE TBL BB	SD-5D202-01		DSX								3	87	FORM PER ED5D503-30 G 315 MAXIMUM LENGTH SHALL NOT EXCEED 655 FEET. UNIT LEV 13.
2920	134	1	JR317	$607B$ 607C	X-DIM	SM( ) LTP/ / OR SMC // DCLU/ /	( )- 006 P4		L	SEE TBL BB	SD-5D202-01		DSX								3	87	FORM PER ED5D503-30 G 317 MAXIMUM LENGTH SHALL NOT EXCEED 655 FEET. UNIT LEV 13.
2925	134A	1	JR311A	$607B$ 607C	X-DIM	SM( ) LTP// OR SMC // DCLU //	(*)- 010	113 132 145	L	SEE TBL BB1	SD5D202-02		DSX								3		FORM PER ED5D503-30 G311A MAXIMUM LENGTH SHALL NOT EXCEED 655 FEET. *UNIT LEVEL 04.
2926	134A	1	JR313A	$607B$ 607C	X-DIM	SM( ) LTP// OR SMC // DCLU //	(*)- 018	113 132 145	L	SEE TBL BB1	SD5D202-02		DSX								3		FORM PER ED5D503-30 G313A MAXIMUM LENGTH SHALL NOT EXCEED 655 FEET. *UNIT LEVEL 04.
2927	134A	1	JR315A	$607B$ 607C	X-DIM	SM( ) LTP// OR SMC // DCLU //	(**)- 010	113 132 145	L	SEE TBL BB1	SD5D202-02		DSX								3		FORM PER ED5D503-30 G315A MAXIMUM LENGTH SHALL NOT EXCEED 655 FEET. **UNIT LEVEL 13.
2928	134A	1	JR317A	$607B$ 607C	X-DIM	SM( ) LTP// OR SMC // DCLU //	(**)- 018	113 132 145	L	SEE TBL BB1	SD5D202-02		DSX								3		FORM PER ED5D503-30 G317A MAXIMUM LENGTH SHALL NOT EXCEED 655 FEET. **UNIT LEVEL 13.

COPYRIGHT @ 2001 LUCENT TECHNOLOGIES
ALL RIGHTS RESERVED

BT13

INTERCABINET CABLING
FOR
5ESS * SWITCH
*LUCENT TRADEMARK

DWG SIZE C2 | ISSUE 117

PRINTED IN U.S.A.

CONNECTORIZED CABLING

ITEM	LIST OR GROUP	NBR RECD	CABLE IDENT	CABLE CODE	B DIM	FROM							TO							ROUTE	SHLD	NOTE	REMARKS
						FRAME OR UNIT	EQL	TERM	POS	DROP LGTH	WIRING DIAGRAM	FIGURE	FRAME OR UNIT	EQL	TERM	POS	DROP LGTH	WIRING DIAGRAM	FIGURE				
2929	134B	1	JR311B	1249012C	X-DIM	SM() LTP// OR SMC // DCLU//	(*)- 006 P1		L	SEE TBL BB	SD5D202-01		DSX								3	87	FORM PER ED5D503-32 G311B MAXIMUM LENGTH SHALL NOT EXCEED 450 FEET. *UNIT LEVEL 04
2930	134B	1	JR313B	1249012C	X-DIM	SM() LTP// OR SMC // DCLU//	(*)- 006 P2		L	SEE TBL BB	SD5D202-01		DSX								3	87	FORM PER ED5D503-32 G313B MAXIMUM LENGTH SHALL NOT EXCEED 450 FEET. *UNIT LEVEL 04
2931	134B	1	JR315B	1249012C	X-DIM	SM() LTP// OR SMC // DCLU//	(**)- 006 P3		L	SEE TBL BB	SD5D202-01		DSX								3	87	FORM PER ED5D503-32 G315B MAXIMUM LENGTH SHALL NOT EXCEED 450 FEET. **UNIT LEVEL 13
2932	134B	1	JR317B	1249012C	X-DIM	SM() LTP// OR SMC // DCLU//	(**)- 006 P4		L	SEE TBL BB	SD5D202-01		DSX								3	87	FORM PER ED5D503-32 G317B MAXIMUM LENGTH SHALL NOT EXCEED 450 FEET. **UNIT LEVEL 13
2933	134C	1	JR311C	1249012C	X-DIM	SM() LTP// OR SMC // DCLU//	(*)- 010	113 132 145	L	SEE TBL BB1	SD5D202-02		DSX								3		FORM PER ED5D503-32 G311C MAXIMUM LENGTH SHALL NOT EXCEED 450 FEET. *UNIT LEVEL 04
2934	134C	1	JR313C	1249012C	X-DIM	SM() LTP// OR SMC // DCLU//	(*)- 018	113 132 145	L	SEE TBL BB1	SD5D202-02		DSX								3		FORM PER ED5D503-32 G313C MAXIMUM LENGTH SHALL NOT EXCEED 450 FEET. *UNIT LEVEL 04
2935	134C	1	JR315C	1249012C	X-DIM	SM() LTP// OR SMC // DCLU//	(**)- 010	113 132 145	L	SEE TBL BB1	SD5D202-02		DSX								3		FORM PER ED5D503-32 G315C MAXIMUM LENGTH SHALL NOT EXCEED 450 FEET. **UNIT LEVEL 13
2936	134C	1	JR317C	1249012C	X-DIM	SM() LTP// OR SMC // DCLU//	(**)- 018	113 132 145	L	SEE TBL BB1	SD5D202-02		DSX								3		FORM PER ED5D503-32 G317C MAXIMUM LENGTH SHALL NOT EXCEED 450 FEET. **UNIT LEVEL 13
2943	135	1	JR319	$607B$ 607C	X-DIM	SM( ) LTP/ / OR SMC // DCLU/ /	( )- 006 P5		L	SEE TBL BB	SD-5D203-01		DSX								3	87	FORM PER ED5D503-30 G 319 MAXIMUM LENGTH SHALL NOT EXCEED 655 FEET.
2944	135	1	JR321	$607B$ 607C	X-DIM	SM( ) LTP/ / OR SMC // DCLU- / /	( )- 006 P6		L	SEE TBL BB	SD-5D204-01		DSX								3	87	FORM PER ED5D503-30 G 321 MAXIMUM LENGTH SHALL NOT EXCEED 655 FEET.

COPYRIGHT @ 2001 LUCENT TECHNOLOGIES
ALL RIGHTS RESERVED

BT13

INTERCABINET CABLING
FOR
5ESS * SWITCH
*LUCENT TRADEMARK

DWG SIZE C2 | ISSUE 117

LUCENT TECHNOLOGIES INC | ED5D500-21 | SHEET A101 OF 292

PRINTED IN U.S.A.

CONNECTORIZED CABLING

ITEM	LIST OR GROUP	NBR RECD	CABLE IDENT	CABLE CODE	B DIM	FROM							TO							ROUTE	SHLD	NOTE	REMARKS
						FRAME OR UNIT	EQL	TERM	POS	DROP LGTH	WIRING DIAGRAM	FIGURE	FRAME OR UNIT	EQL	TERM	POS	DROP LGTH	WIRING DIAGRAM	FIGURE				
2945	135A	1	JR319A	$607B$ 607C	X-DIM	SM( ) LTP// OR SMC // DCLU- SUPL//	( )- 010	113 132 145	L	SEE TBL BB1	SD5D203-02		DSX								3		FORM PER ED5D503-30 G319A MAXIMUM LENGTH SHALL NOT EXCEED 655 FEET.
2946	135A	1	JR321A	$607B$ 607C	X-DIM	SM( ) LTP// OR SMC // DCLU SUPL//	( )- 018	113 132 145	L	SEE TBL BB1	SD5D203-02		DSX								3		FORM PER ED5D503-30 G321A MAXIMUM LENGTH SHALL NOT EXCEED 655 FEET.
2947	135B	1	JR319B	1249012C	X-DIM	SM() LTP// OR SMC // DCLU-S //	( )- 006 J5		L	SEE TBL BB	SD5D202-01		DSX								3	87	FORM PER ED5D503-32 G319B MAXIMUM LENGTH SHALL NOT EXCEED 450 FEET.
2948	135B	1	JR321B	1249012C	X-DIM	SM() LTP// OR SMC // DCLU-S //	( )- 006 J6		L	SEE TBL BB	SD5D202-01		DSX								3	87	FORM PER ED5D503-32 G321B MAXIMUM LENGTH SHALL NOT EXCEED 450 FEET.
2949	135C	1	JR319C	1249012C	X-DIM	SM() LTP// OR SMC // DCLU-S //	( )- 010	113 132 145	L	SEE TBL BB1	SD5D202-02		DSX								3		FORM PER ED5D503-32 G319C MAXIMUM LENGTH SHALL NOT EXCEED 450 FEET.
2950	135C	1	JR321C	1249012C	X-DIM	SM() LTP// OR SMC // DCLU-S //	( )- 018	113 132 145	L	SEE TBL BB1	SD5D202-02		DSX								3		FORM PER ED5D503-32 G321C MAXIMUM LENGTH SHALL NOT EXCEED 450 FEET.
2955	137	-	JV159	811A	X-DIM	SM ( ) SMC // COMM JK PNL OR ( )	( )- ( ) SEE TBL KA1	501	L/R	1-9 /R/ 7-11 /P/	SD-5D139-01		DF								3		FORM PER ED5D505-30 G 159 (ORDER ONE GROUP PER MMRSM). SEE SK.K TBL KA1.
2956	137A	-	JV159B	294A	X-DIM	SM ( ) SMC // OR SM() SM 1 COMM JK PNL OR ( )	( )- ( ) SEE TBL KA3	000	L	1-9 /R/ 7-11 /P/	SD-5D139-01		DF								3		FORM PER ED5D505-30 G159B (ORDER ONE GROUP PER MMRSM). SEE SK.K TBL KA3.
2961	138	1	JR307	1249020C	X-DIM	SM( ) LTP// SMC // IDCU //	( )- 085	132 145					DSX								3		

COPYRIGHT @ 2001 LUCENT TECHNOLOGIES
ALL RIGHTS RESERVED

BT13

INTERCABINET CABLING
FOR
5ESS * SWITCH
*LUCENT TRADEMARK

DWG SIZE C2 | ISSUE 117

LUCENT TECHNOLOGIES INC | ED5D500-21 | SHEET A102 OF 292

PRINTED IN U.S.A.

CONNECTORIZED CABLING

ITEM	LIST OR GROUP	NBR RECD	CABLE IDENT	CABLE CODE	B DIM	FROM							TO							ROUTE	SHLD	NOTE	REMARKS
						FRAME OR UNIT	EQL	TERM	POS	DROP LGTH	WIRING DIAGRAM	FIGURE	FRAME OR UNIT	EQL	TERM	POS	DROP LGTH	WIRING DIAGRAM	FIGURE				
2962	138	1	JR307A	1249020C	X-DIM	SM( )-LTP// SMC // IDCU //	( )-085	100 113					DSX								3		
2963	138	1	JR307B	1249020C	X-DIM	SM( ) LTP// SMC // IDCU //	( )-097	132 145					DSX								3		
2964	138	1	JR307C	1249020C	X-DIM	SM( ) LTP// SMC // IDCU //	( )-097	100 113					DSX								3		
2965	139	1	JR308	609C	X-DIM	SM( ) LTP// SMC // IDCU //	( )-085	132 145					DSX								3		
2966	139	1	JR308A	609C	X-DIM	SM( ) LTP// SMC // IDCU //	( )-085	100 113					DSX								3		
2967	139	1	JR308B	609C	X-DIM	SM( ) LTP// SMC // IDCU //	( )-097	132 145					DSX								3		
2968	139	1	JR308C	609C	X-DIM	SM( ) LTP// SMC // IDCU //	( )-097	100 113					DSX								3		
2980	140	1	JR150	285A	X-DIM	SM( ) LTP/ / OR SMC/ / DCTU PMU/ /	/J1/ ( )-178	146	R	SEE TBL BF	SD-2P077-01		DF								3		

COPYRIGHT @ 2001 LUCENT TECHNOLOGIES
ALL RIGHTS RESERVED

BT13

INTERCABINET CABLING
FOR
5ESS * SWITCH
*LUCENT TRADEMARK

DWG SIZE C2 | ISSUE 117

PRINTED IN U.S.A.

CONNECTORIZED CABLING

ITEM	LIST OR GROUP	NBR RECD	CABLE IDENT	CABLE CODE	B DIM	FROM							TO							ROUTE	SHLD	NOTE	REMARKS
						FRAME OR UNIT	EQL	TERM	POS	DROP LGTH	WIRING DIAGRAM	FIGURE	FRAME OR UNIT	EQL	TERM	POS	DROP LGTH	WIRING DIAGRAM	FIGURE				
2985	140A	1	JR151	285A	X-DIM	SM( ) LTP/ / OR SMC/ / MMSU/ /	/J1/ ( )- ( )	( )	R	SEE TBL CC4	SD-5D016-01		DF								3		
							/J2/ ( )- ( )	( )															
							/J3/ ( )- ( )	( )															
							/J4/ ( )- ( )	( )															
							/J5/ ( )- ( )	( )															
							/J6/ ( )- ( )	( )															
							/J7/ ( )- ( )	( )															
							/J8/ ( )- ( )	( )															
							/J9/ ( )- ( )	( )															
							/J10/ ( )- ( )	( )															
							/J11/ ( )- ( )	( )															
							/J12/ ( )- ( )	( )															
							/J13/ ( )- ( )	( )															
							/J14/ ( )- ( )	( )															
							/J15/ ( )- ( )	( )															
							/J16/ ( )- ( )	( ) SEE TBL CC3															

COPYRIGHT @ 2001 LUCENT TECHNOLOGIES
ALL RIGHTS RESERVED

BT13

INTERCABINET CABLING
FOR
5ESS * SWITCH
*LUCENT TRADEMARK

DWG SIZE C2 | ISSUE 117

PRINTED IN U.S.A.

CONNECTORIZED CABLING

ITEM	LIST OR GROUP	NBR RECD	CABLE IDENT	CABLE CODE	B DIM	FROM							TO							ROUTE	SHLD	NOTE	REMARKS
						FRAME OR UNIT	EQL	TERM	POS	DROP LGTH	WIRING DIAGRAM	FIGURE	FRAME OR UNIT	EQL	TERM	POS	DROP LGTH	WIRING DIAGRAM	FIGURE				
2990	140B	1	JR152	285A	X-DIM	SM ( ) LTP/ / OR SMC/ / MMSU/ /	/J1/ ( )- ( ) /J2/ ( )- ( ) /J3/ ( )- ( ) /J4/ ( )- ( ) /J5/ ( )- ( ) /J6/ ( )- ( ) /J7/ ( )- ( ) /J8/ ( )- ( ) /J9/ ( )- ( ) /J10/ ( )- ( ) /J11/ ( )- ( ) /J12/ ( )- ( ) /J13/ ( )- ( ) /J14/ ( )- ( ) /J15/ ( )- ( ) /J16/ ( )- ( )	( ) ( ) ( ) ( ) ( ) ( ) ( ) ( ) ( ) ( ) ( ) ( ) ( ) ( ) ( ) ( ) SEE TBL CC3	R	SEE TBL CC4	SD-5D016-01		SM( ) LTP/ / OR SMC/ / DCTU PMU/ /	/J17/ ( )- 178	146	R	SEE TBL BF	SD-2P077-01			3		
3000	141	1	JR37	285A	X-DIM	SM( ) LTP/ / OR SMC // DCTU PMU/ /	/J3/ ( )- 178	146	R	SEE TBL BF	SD-2P077-01		SM( ) LTP/ / OR SMC // MMSU/ /	/J1/ ( )- ( ) /J2/ ( )- ( )	( ) ( ) SEE TBL CC	L	SEE TBL DA & DB	SD-5D016-01			3		

COPYRIGHT @ 2001 LUCENT TECHNOLOGIES
ALL RIGHTS RESERVED

BT13

INTERCABINET CABLING
FOR
5ESS * SWITCH
*LUCENT TRADEMARK

DWG SIZE C2 | ISSUE 117

LUCENT TECHNOLOGIES INC | ED5D500-21 | SHEET A105 OF 292

PRINTED IN U.S.A.

CONNECTORIZED CABLING

ITEM	LIST OR GROUP	NBR RECD	CABLE IDENT	CABLE CODE	B DIM	FROM							TO							ROUTE	SHLD	NOTE	REMARKS
						FRAME OR UNIT	EQL	TERM	POS	DROP LGTH	WIRING DIAGRAM	FIGURE	FRAME OR UNIT	EQL	TERM	POS	DROP LGTH	WIRING DIAGRAM	FIGURE				
3005	141A	1	JR37A	285A	X-DIM	SM( ) LTP/ / OR SMC // DCTU PMU/ /	/J5/ ( )- 178	146	R	SEE TBL BF	SD-2P077-01		SM( ) LTP/ / OR SMC // MMSU/ /	/J1/ ( )- ( ) /J2/ ( )- ( ) /J3/ ( )- ( ) /J4/ ( )- ( )	( ) ( ) SEE TBL CC1 ( ) ( )	L	SEE TBL DA & DB	SD-5D016-01			3		
3010	142	1	JR38	285A	X-DIM	SM( ) LTP/ / OR SMC // DCTU PMU/ /	/J3/ ( )- 178	146	R	SEE TBL BF	SD-2P077-01		SM( ) LTP/ / OR SMC // MMSU/ /	/J1/ ( )- ( ) /J2/ ( )- ( )	( ) ( ) SEE TBL CC	R	SEE TBL DA & DB	SD-5D016-01			3		
3015	142A	1	JR38A	285A	X-DIM	SM( ) LTP/ / OR SMC // DCTU PMU/ /	/J5/ ( )- 178	146	R	SEE TBL BF	SD-2P077-01		SM( ) LTP/ / OR SMC // MMSU/ /	/J1/ ( )- ( ) /J2/ ( )- ( ) /J3/ ( )- ( ) /J4/ ( )- ( )	( ) ( ) SEE TBL CC1 ( ) ( )	R	SEE TBL DA & DB	SD-5D016-01			3		
3020	143	1	JQ5	WP93746L1*	X-DIM	SM/ / LTP/ / OR SMC // DCTU CONT	/ /- 037	040	L	2-0 /R/ 6-2 /P/	SD-2P077-01		MN GRD BUS IN GRD WINDOW OR SUPL BUS								4	94	FORM PER ED5D129-30 G 1 SEE ED-5D022-11, FIG. 16 FOR GRD BAR (* 16GA STRD BK)
3100	145	1	JR305	609C	X-DIM	SM() LTP// OR SMC // DLTU2 //	( )- 099	132 145 332 345	L	SEE TBL BB2	SD5D205-01		DSX								3		FORM PER ED5D503-32 G 305 IN MAXIMUM LENGTH SHALL NOT EXCEED 655 FEET.
3110	145	1	JR306	609C	X-DIM	SM() LTP// OR SMC //1 DLTU2 //	( )- 099	100 113 300 313	R	SEE TBL BB2	SD5D205-01		DSX								3		FORM PER ED5D503-32 G 306 OUT MAXIMUM LENGTH SHALL NOT EXCEED 655 FEET.

COPYRIGHT @ 2001 LUCENT TECHNOLOGIES
ALL RIGHTS RESERVED

BT13

INTERCABINET CABLING
FOR
5ESS * SWITCH
*LUCENT TRADEMARK

DWG SIZE C2 | ISSUE 117

LUCENT TECHNOLOGIES INC | ED5D500-21 | SHEET A106 OF 292

PRINTED IN U.S.A.

CONNECTORIZED CABLING

ITEM	LIST OR GROUP	NBR RECD	CABLE IDENT	CABLE CODE	B DIM	FROM							TO							ROUTE	SHLD	NOTE	REMARKS
						FRAME OR UNIT	EQL	TERM	POS	DROP LGTH	WIRING DIAGRAM	FIGURE	FRAME OR UNIT	EQL	TERM	POS	DROP LGTH	WIRING DIAGRAM	FIGURE				
3120	145A	1	JR305A	1249020C	X-DIM	SM() LTP// OR SMC // DLTU2 //	( )- 099	132 145 332 345	L	SEE TBL BB2	SD5D205-01		DSX								3		FORM PER ED5D503-32 G305A IN MAXIMUM LENGTH SHALL NOT EXCEED 450 FEET.
3130	145A	1	JR306A	1249020C	X-DIM	SM() LTP// OR SMC // DLTU2 //	( )- 099	100 113 300 313	R	SEE TBL BB2	SD5D205-01		DSX								3		FORM PER ED5D503-32 G306A OUT MAXIMUM LENGTH SHALL NOT EXCEED 450 FEET.
3135	145B	1	JR1	1249012C	X-DIM	SM() LTP// OR SMC // DLTU2 //	( )- 099	132 100 117 149 313 345	R				DSX								3		FORM PER ED5D843-30 G 1 IN/OUT MAXIMUM LENGTH SHALL NOT EXCEED 440 FEET. DFI'S 1,5 AND 9
3140	145C	1	JR2	1249012C	X-DIM	SM() LTP// OR SMC // DLTU2 //	( )- 099	113 145 308 340	R				DSX								3		FORM PER ED5D843-30 G 2 IN/OUT MAXIMUM LENGTH SHALL NOT EXCEED 440 FEET. DFI'S 4 AND 8.
3145	145D	1	JR3	1249012C	X-DIM	SM() LTP// OR SMC // DLTU2 //	( )- 099	104 136 300 317 332 349	L				DSX								3		FORM PER ED5D843-30 G 3 IN/OUT MAXIMUM LENGTH SHALL NOT EXCEED 440 FEET. DFI'S 2,6 AND 10.
3150	145E	1	JR4	1249012C	X-DIM	SM() LTP// OR SMC // DLTU2 //	( )- 099	108 140 304 336	L				DSX								3		FORM PER ED5D843-30 G 4 IN/OUT MAXIMUM LENGTH SHALL NOT EXCEED 440 FEET. DFI'S 3 AND 7.
3155	145F	1	JR5	607C	X-DIM	SM() LTP// OR SMC // DLTU2 //	( )- 099	132 100 117 149 313 345		R			DSX								3		FORM PER ED5D843-30 G 5 IN/OUT MAXIMUM LENGTH SHALL NOT EXCEED 655 FEET. DFI'S 1,5 AND 9.
3160	145G	1	JR6	607C	X-DIM	SM() LTP// OR SMC // DLTU2 //	( )- 099	113 145 308 340	R				DSX								3		FORM PER ED5D843-30 G 6 IN/OUT MAXIMUM LENGTH SHALL NOT EXCEED 655 FEET. DFI'S 4 AND 8.

COPYRIGHT @ 2001 LUCENT TECHNOLOGIES
ALL RIGHTS RESERVED

BT13

INTERCABINET CABLING
FOR
5ESS * SWITCH
*LUCENT TRADEMARK

DWG SIZE C2 | ISSUE 117

PRINTED IN U.S.A.

CONNECTORIZED CABLING

ITEM	LIST OR GROUP	NBR RECD	CABLE IDENT	CABLE CODE	B DIM	FROM							TO							ROUTE	SHLD	NOTE	REMARKS
						FRAME OR UNIT	EQL	TERM	POS	DROP LGTH	WIRING DIAGRAM	FIGURE	FRAME OR UNIT	EQL	TERM	POS	DROP LGTH	WIRING DIAGRAM	FIGURE				
3165	145H	1	JR7	607C	X-DIM	SM() LTP// OR SMC // DLTU2 //	( )- 099	104 136 300 317 332 349	L				DSX								3		FORM PER ED5D843-30 G 7 IN/OUT MAXIMUM LENGTH SHALL NOT EXCEED 655 FEET. DFI'S 2, 6 AND 10.
3170	145J	1	JR8	607C	X-DIM	SM() LTP// OR SMC // DLTU2 //	( )- 099	108 140 304 336	L				DSX								3		FORM PER ED5D843-30 G 8 IN/OUT MAXIMUM LENGTH SHALL NOT EXCEED 655 FEET. DFI'S 3 AND 7.
3175	145K	1	JR305B	WP94077L2	X-DIM	SM( ) LTP// OR SMC DLTU2 //	/J1/ ()11- 099 /J2/ ()11- 099 /J3/ ()11- 099 /J4/ ()11- 099 /J5/ ()19- 099 /J6/ ()19- 099 /J7/ ()19- 099 /J8/ ()19- 099 /J9/ ()28 099 /J10/ ()28- 099 /J11/ ()28- 099 /J12/ ()28- 099	132 145 332 345 132 145 332 345 132 145 332 345	L	SEE TBL BB2	SD5D205-01		DSX								3		FORM PER ED5D503-32 G305B IN MAXIMUM LENGTH SHALL NOT EXCEED 655 FEET. (60 DFI'S)

COPYRIGHT @ 2001 LUCENT TECHNOLOGIES
ALL RIGHTS RESERVED

BT13

INTERCABINET CABLING
FOR
5ESS * SWITCH
*LUCENT TRADEMARK

DWG SIZE C2 | ISSUE 117

PRINTED IN U.S.A.

ITEM	LIST OR GROUP	NBR RECD	CABLE IDENT	CABLE CODE	B DIM	FROM							TO							ROUTE	SHLD	NOTE	REMARKS
						FRAME OR UNIT	EQL	TERM	POS	DROP LGTH	WIRING DIAGRAM	FIGURE	FRAME OR UNIT	EQL	TERM	POS	DROP LGTH	WIRING DIAGRAM	FIGURE				
3180	145K	1	JR306B	WP94077L2	X-DIM	SM() LTP // OR SMC // DLTU2 //	/J1/ ()11-099 /J2/ ()11-099 /J3/ ()11-099 /J4/ ()11-099 /J5/ ()19-099 /J6/ ()19-099 /J7/ ()19-099 /J8/ ()19-099 /J9/ ()28-099 /J10/ ()28-099 /J11/ ()28-099 /J12/ ()28-099	100 113 300 313 100 113 300 313 100 113 300 313	R	SEE TBL BB2	DS5D205-01		DSX								3		FORM PER ED5D503-32 G306B OUT MAXIMUM LENGTH SHALL NOT EXCEED 655 FEET. (60 DFI'S)
3200	146	1	JR322	609C	X-DIM	SM() LTP// OR SMC // DLTU3 //	( )-052	132 145 332 345	L	SEE TBL BB2	SD5D501-01		DSX										FORM PER ED5D503-32 G 322 IN MAXIMUM LENGTH SHALL NOT EXCEED 655 FEET.
3250	146	1	JR323	609C	X-DIM	SM() LTP// OR SMC // DLTU3 //	( )-052	100 113 300 313	L	SEE TBL BB2	SD5D501-01		DSX										FORM PER ED5D503-32 G 323 OUT MAXIMUM LENGTH SHALL NOT EXCEED 655 FEET.
3300	146A	1	JR322A	1249020C	X-DIM	SM() LTP// OR SMC // DLTU3 //	( )-052	132 145 332 345	L	SEE TBL BB2	SD5D501-01		DSX										FORM PER ED5D503-32 G322A IN MAXIMUM LENGTH SHALL NOT EXCEED 450 FEET.

COPYRIGHT @ 2001 LUCENT TECHNOLOGIES
ALL RIGHTS RESERVED

BT13

INTERCABINET CABLING
FOR
5ESS * SWITCH
*LUCENT TRADEMARK

DWG SIZE C2 | ISSUE 117

PRINTED IN U.S.A.

CONNECTORIZED CABLING

ITEM	LIST OR GROUP	NBR RECD	CABLE IDENT	CABLE CODE	B DIM	FROM							TO							ROUTE	SHLD	NOTE	REMARKS
						FRAME OR UNIT	EQL	TERM	POS	DROP LGTH	WIRING DIAGRAM	FIGURE	FRAME OR UNIT	EQL	TERM	POS	DROP LGTH	WIRING DIAGRAM	FIGURE				
3350	146A	1	JR323A	1249020C	X-DIM	SM() LTP// OR SMC // DLTU3 //	( )- 052	100 113 300 313	L	SEE TBL BB2	SD5D501-01		DSX										FORM PER ED5D503-32 G323A OUT MAXIMUM LENGTH SHALL NOT EXCEED 450 FEET.
3352	146B	1	JR322C	1249020A	X-DIM	SM() LTP// OR SMC // DLTU3 //	( )- 052	132 145 332 345	L	SEE TBL BB2	SD5D501-01		DSX										FORM PER ED5D503-32 G322C IN MAXIMUM LENGTH SHALL NOT EXCEED 450 FEET.
3353	146B	1	JR323C	1249020A	X-DIM	SM() LTP// OR SMC // DLTU3 //	( )- 052	100 113 300 313	L	SEE TBL BB2	SD5D501-01		DSX										FORM PER ED5D503-32 G323C OUT MAXIMUM LENGTH SHALL NOT EXCEED 450 FEET.
3355	146C	1	JR322D	607C	X-DIM	SM() LTP// OR SMC // DLTU3 // OR CSU/ /	( )- 154	132 145	L	SEE TBL BB2	SD5D530-01		DSX										FORM PER ED5D503-32 G322D IN MAXIMUM LENGTH SHALL NOT EXCEED 655 FEET.
3360	146C	1	JR323D	607C	X-DIM	SM() LTP// OR SMC // DLTU3 // OR CSU/ /	( )- 154	100 113	L	SEE TBL BB2	SD5D530-01		DSX										FORM PER ED5D503-32 G323D OUT MAXIMUM LENGTH SHALL NOT EXCEED 655 FEET.
3365	146D	1	JR322E	1249012C	X-DIM	SM() LTP// OR SMC // DLTU3 // OR CSU/ /	( )- 154	132 145	L	SEE TBL BB2	SD5D530-01		DSX										FORM PER ED5D503-32 G322E IN MAXIMUM LENGTH SHALL NOT EXCEED 450 FEET.
3370	146D	1	JR323E	1249012C	X-DIM	SM() LTP// OR SMC // DLTU3 // OR CSU/ /	( )- 154	100 113	L	SEE TBL BB2	SD5D530-01		DSX										FORM PER ED5D503-32 G323E OUT MAXIMUM LENGTH SHALL NOT EXCEED 450 FEET.
3375	146E	1	JR322F	1249012A	X-DIM	SM() LTP// OR SMC // DLTU3 // OR CSU/ /	( )- 154	132 145	L	SEE TBL BB2	SD5D530-01		DSX										FORM PER ED5D503-32 G322F IN MAXIMUM LENGTH SHALL NOT EXCEED 450 FEET.

COPYRIGHT @ 2001 LUCENT TECHNOLOGIES
ALL RIGHTS RESERVED

BT13

INTERCABINET CABLING
FOR
5ESS * SWITCH
*LUCENT TRADEMARK

DWG SIZE C2 | ISSUE 117

LUCENT TECHNOLOGIES INC | ED5D500-21 | SHEET A110 OF 292

PRINTED IN U.S.A.

CONNECTORIZED CABLING

ITEM	LIST OR GROUP	NBR RECD	CABLE IDENT	CABLE CODE	B DIM	FROM							TO							ROUTE	SHLD	NOTE	REMARKS
						FRAME OR UNIT	EQL	TERM	POS	DROP LGTH	WIRING DIAGRAM	FIGURE	FRAME OR UNIT	EQL	TERM	POS	DROP LGTH	WIRING DIAGRAM	FIGURE				
3380	146E	1	JR323F	1249012A	X-DIM	SM() LTP// OR SMC // DLTU3 // OR CSU/ /	( )- 154	100 113	L	SEE TBL BB2	SD5D530-01		DSX										FORM PER ED5D503-32 G323F OUT MAXIMUM LENGTH SHALL NOT EXCEED 450 FEET.
3400	147	1	JR324	609C	X-DIM	SM() LTP// OR SMC // DLTU3 //	( )- 136	132 145 332 345	R	SEE TBL BB2	SD5D501-01		DSX										FORM PER ED5D503-32 G 324 IN MAXIMUM LENGTH SHALL NOT EXCEED 655 FEET.
3450	147	1	JR325	609C	X-DIM	SM() LTP// OR SMC // DLTU3 //	( )- 136	100 113 300 313	R	SEE TBL BB2	SD5D501-01		DSX										FORM PER ED5D503-32 G 325 OUT MAXIMUM LENGTH SHALL NOT EXCEED 655 FEET.
3500	147A	1	JR324A	1249020C	X-DIM	SM() LTP// OR SMC // DLTU3 //	( )- 136	132 145 332 345	R	SEE TBL BB2	SD5D501-01		DSX										FORM PER ED5D503-32 G324A IN MAXIMUM LENGTH SHALL NOT EXCEED 450 FEET.
3550	147A	1	JR325A	1249020C	X-DIM	SM() LTP// OR SMC // DLTU3 //	( )- 136	100 113 300 313	R	SEE TBL BB2	SD5D501-01		DSX										FORM PER ED5D503-32 G325A OUT MAXIMUM LENGTH SHALL NOT EXCEED 450 FEET.
3552	147B	1	JR324C	1249020A	X-DIM	SM() LTP// OR SMC // DLTU3 //	( )- 136	132 145 332 345	R	SEE TBL BB2	SD5D501-01		DSX										FORM PER ED5D503-32 G324C IN MAXIMUM LENGTH SHALL NOT EXCEED 450 FEET.
3553	147B	1	JR325C	1249020A	X-DIM	SM() LTP// OR SMC // DLTU3 //	( )- 136	100 113 300 313	R	SEE TBL BB2	SD5D501-01		DSX										FORM PER ED5D503-32 G325C OUT MAXIMUM LENGTH SHALL NOT EXCEED 450 FEET.
3560	148	##	JR350	735A	X-DIM	SM() LTP/ / OR SMC // DLTU3 / / OR CSU/ /	( )- ( ) SEE TBL CX1 OR CX1B	340	*		SD5D501-01		DSX								3			FORM PER ED5D503-32 G 350 (MAX CABLE LENGTH SHALL NOT EXCEED 655 FT). (IN) * POSTION IS "LEFT" FOR DFI'S 1-10 AND RIGHT FOR DFI'S 11-20 (AS SPECIFIED). (SINGLE POINT GRD) ## FCAB REQUIRES A QUANTITY OF 2(TWO) FOR PROPER CABLE LENGTH BECAUSE ED5D503-32,GR 350 CONSIST OF 2(TWO) LENGTHS OF 735A CA,EACH WITH THE SAME 'X' DIM.
3561	148	##	JR351	735A	X-DIM	SM() LTP/ / OR SMC // DLTU3 / / OR CSU/ /	( )- ( ) SEE TBL CX1 OR CX1B	140	*		SD5D501-01		DSX								3			FORM PER ED5D503-32 G 351 (MAX. CABLE LENGTH SHALL NOT EXCEED 655 FT.) (OUT) * POSTION IS "LEFT" FOR DLTU3 DFI'S 1-10 AND CSU DFI'S 1-5 AND RIGHT FOR DLTU3 DFI'S 11-20 (AS SPECIFIED). (SINGLE POINT GRD) ## FCAB REQUIRES A QUANTITY OF 2(TWO) FOR PROPER CABLE LENGTH BECAUSE ED5D503-32,GR351 CONSIST OF 2(TWO) LENGTHS OF 735A CA,EACH WITH THE SAME 'X' DIM.

COPYRIGHT @ 2001 LUCENT TECHNOLOGIES
ALL RIGHTS RESERVED

BT13

INTERCABINET CABLING
FOR
5ESS * SWITCH
*LUCENT TRADEMARK

DWG SIZE C2 | ISSUE 117

LUCENT TECHNOLOGIES INC | ED5D500-21 | SHEET A111 OF 292

PRINTED IN U.S.A.

CONNECTORIZED CABLING

ITEM	LIST OR GROUP	NBR RECD	CABLE IDENT	CABLE CODE	B DIM	FROM							TO							ROUTE	SHLD	NOTE	REMARKS
						FRAME OR UNIT	EQL	TERM	POS	DROP LGTH	WIRING DIAGRAM	FIGURE	FRAME OR UNIT	EQL	TERM	POS	DROP LGTH	WIRING DIAGRAM	FIGURE				
3565	148E	##	JR350E	735A	X-DIM	SM() LTP/ / OR SMC // DLTU3 / / OR CSU/ /	( )- ( ) SEE TBL CX1 OR CX1B	340	*		SD5D501-01		DSX									3		FORM PER ED5D803-36 G 3 (MAX CABLE LENGTH SHALL NOT EXCEED 655 FT). (IN) * POSTION IS "LEFT" FOR DFI'S 1-10 AND RIGHT FOR DFI'S 11-20 (AS SPECIFIED). (SINGLE POINT GRD) ## FCAB REQUIRES A QUANTITY OF 2(TWO) FOR PROPER CABLE LENGTH BECAUSE ED5D503-32,GR 350 CONSIST OF 2(TWO) LENGTHS OF 735A CA,EACH WITH THE SAME 'X' DIM. DSX TERMINATION IS BNC CONNECTOR
3566	148E	##	JR351E	735A	X-DIM	SM() LTP/ / OR SMC // DLTU3 / / OR CSU/ /	( )- ( ) SEE TBL CX1 OR CX1B	140	*		SD5D501-01		DSX									3		FORM PER ED5D803-36 G 4 (MAX. CABLE LENGTH SHALL NOT EXCEED 655 FT.) (OUT) * POSTION IS "LEFT" FOR DLTU3 DFI'S 1-10 AND CSU DFI'S 1-5 AND RIGHT FOR DLTU3 DFI'S 11-20 (AS SPECIFIED). (SINGLE POINT GRD) ## FCAB REQUIRES A QUANTITY OF 2(TWO) FOR PROPER CABLE LENGTH BECAUSE ED5D503-32,GR351 CONSIST OF 2(TWO) LENGTHS OF 735A CA,EACH WITH THE SAME 'X' DIM. DSX TERMINATION IS BNC CONNECTOR
3568	148F	#	JR148F	1928B	X-DIM	SM( ) LTP/ / OR SMC // DLTU3 / /	( )- ( ) SEE CX1A	340 140	*		SD5D501-01		DSX									3		FORM PER ED5D803-38 G 1 (MAX CABLE LENGTH SHALL NOT EXCEED 655 FT. (IN) TERM 340 (OUT) TERM 140 * POSTION IS "RIGHT" FOR DFI'S 1-10 (AS SPECIFIED) POSTION IS "LEFT" FOR DFI'S 11-20 (AS SPECIFIED) # FCAB REQUIRES A QUANTITY 1 CABLE FOR 2-DFI'S. EACH GROUP 1 OF ED5D803-38 FEEDS 2 DFI'S. (SINGLE POINT GRD) DSX TERMINATION IS BNC CONNECTOR
3569	148G	#	JR148G	3928A	X-DIM	SM( ) LTP/ / OR SMC // DLTU3 / /	( )- ( ) SEE CX1A	340 140	*		SD5D501-01		DSX									3		FORM PER ED5D803-38 G 1 (MAX CABLE LENGTH SHALL NOT EXCEED 655 FT. (IN) TERM 340 (OUT) TERM 140 * POSTION IS "RIGHT" FOR DFI'S 1-10 (AS SPECIFIED) POSTION IS "LEFT" FOR DFI'S 11-20 (AS SPECIFIED) # FCAB REQUIRES A QUANTITY 1 CABLE FOR 2-DFI'S. EACH GROUP 2 OF ED5D803-38 FEEDS 2 DFI'S. (SINGLE POINT GRD) DSX TERMINATION IS BNC CONNECTOR
3570	148H	#	JR148H	WP93875L6	X-DIM	SM( ) LTP/ / OR SMC // DLTU3 / /	( )- ( ) SEE CX1C	340 140	*		SD5D501-01		DSX									3		FORM PER ED5D803-38 G 1 (MAX CABLE LENGTH SHALL NOT EXCEED 655 FT. (IN) TERM 340 (OUT) TERM 140 * POSTION IS "RIGHT" FOR DFI'S 1-10 (AS SPECIFIED) POSTION IS "LEFT" FOR DFI'S 11-20 (AS SPECIFIED) # FCAB REQUIRES A QUANTITY 1 CABLE FOR 4-DFI'S. EACH GROUP 3 OF ED5D803-38 FEEDS 4 DFI'S. (SINGLE POINT GRD) DSX TERMINATION IS BNC CONNECTOR
3571	148J	#	JR148J	WP93875L36	X-DIM	SM( ) LTP/ / OR SMC // DLTU3 / /	( )- ( ) SEE CX1C	340 140	*		SD5D501-01		DSX									3		FORM PER ED5D803-38 G 1 (MAX CABLE LENGTH SHALL NOT EXCEED 655 FT. (IN) TERM 340 (OUT) TERM 140 * POSTION IS "RIGHT" FOR DFI'S 1-10 (AS SPECIFIED) POSTION IS "LEFT" FOR DFI'S 11-20 (AS SPECIFIED) # FCAB REQUIRES A QUANTITY 1 CABLE FOR 4-DFI'S. EACH GROUP 4 OF ED5D803-38 FEEDS 4 DFI'S. (SINGLE POINT GRD) DSX TERMINATION IS BNC CONNECTOR
3572	148A	##	JR350B	735A	X-DIM	SM() LTP/ / OR SMC // DLTU3 / /	( )- ( ) SEE TBL CX1	340	*		SD5D501-01		DSX									3		FORM PER ED5D503-32 G350B (MAX CABLE LENGTH SHALL NOT EXCEED 655 FT). (IN) * POSTION IS "LEFT" FOR DFI'S 1-10 AND RIGHT FOR DFI'S 11-20 (AS SPECIFIED). (MESH GRD) ## FCAB REQUIRES A QUANTITY OF 2(TWO) FOR PROPER CABLE LENGH BECAUSE ED5D503-32,GR350B CONSIST OF 2(TWO) LEHGTS OF 735A CA,EACH WITH THE SAME 'X' DIM

COPYRIGHT @ 2001 LUCENT TECHNOLOGIES
ALL RIGHTS RESERVED

BT13

INTERCABINET CABLING
FOR
5ESS * SWITCH
*LUCENT TRADEMARK

DWG SIZE C2 | ISSUE 117

PRINTED IN U.S.A.

CONNECTORIZED CABLING

ITEM	LIST OR GROUP	NBR RECD	CABLE IDENT	CABLE CODE	B DIM	FROM							TO							ROUTE	SHLD	NOTE	REMARKS
						FRAME OR UNIT	EQL	TERM	POS	DROP LGTH	WIRING DIAGRAM	FIGURE	FRAME OR UNIT	EQL	TERM	POS	DROP LGTH	WIRING DIAGRAM	FIGURE				
3574	148A	##	JR351B	735A	X-DIM	SM() LTP/ / OR SMC // DLTU3 / /	( )- ( ) SEE TBL CX1	140	*		SD5D501-01		DSX								3		FORM PER ED5D503-32 G351B (MAX. CABLE LENGTH SHALL NOT EXCEED 655 FT.) (OUT) * POSTION IS "LEFT" FOR DFI'S 1-10 AND RIGHT FOR DFI'S 11-20 (AS SPECFIED). (MESH GRD) ## FCAB REQUIRES A QUANTITY OF 2(TWO) FOR PROPER CABLE LENGTH BECAUSE ED5D503-32,GR351B CONSIST OF 2(TWO) LENGTHS OF 735A CA,EACH WITH THE SAME 'X' DIM
3576	148C	##	JR350C	735A	X-DIM	SM() LTP/ / OR SMC // DLTU3 / /	( )- ( ) SEE TBL CX1	340	*		SD5D501-01		DSX								3		FORM PER ED5D503-32 G350C (MAX CABLE LENGTH SHALL NOT EXCEED 655 FT). (IN) * POSTION IS "LEFT" FOR DFI'S 1-10 AND RIGHT FOR DFI'S 11-20 (AS SPECIFIED). (SINGLE POINT GRD) ## FCAB REQUIRES A QUANTITY OF 2(TWO) FOR PROPER CABLE LENGTH BECAUSE ED5D503-32,GR 350C CONSIST OF 2(TWO) LENGTHS OF 735A CA,EACH WITH THE SAME 'X' DIM.
3577	148C	##	JR351C	735A	X-DIM	SM() LTP/ / OR SMC // DLTU3 / /	( )- ( ) SEE TBL CX1	140	*		SD5D501-01		DSX								3		FORM PER ED5D503-32 G351C (MAX. CABLE LENGTH SHALL NOT EXCEED 655 FT.) (OUT) * POSTION IS "LEFT" FOR DFI'S 1-10 AND RIGHT FOR DFI'S 11-20 (AS SPECFIED). (SINGLE POINT GRD) ## FCAB REQUIRES A QUANTITY OF 2(TWO) FOR PROPER CABLE LENGTH BECAUSE ED5D503-32,GR351C CONSIST OF 2(TWO) LENGTHS OF 735A CA,EACH WITH THE SAME 'X' DIM.
3579	148D	##	JR350D	735A	X-DIM	SM() LTP/ / OR SMC // DLTU3 / /	( )- ( ) SEE TBL CX1	340	*		SD5D501-01		DSX								3		FORM PER ED5D503-32 G350D (MAX CABLE LENGTH SHALL NOT EXCEED 655 FT). (IN) * POSTION IS "LEFT" FOR DFI'S 1-10 AND RIGHT FOR DFI'S 11-20 (AS SPECIFIED). (MESH GRD) ## FCAB REQUIRES A QUANTITY OF 2(TWO) FOR PROPER CABLE LENGH BECAUSE ED5D503-32,GR350D CONSIST OF 2(TWO) LEHGTS OF 735A CA,EACH WITH THE SAME 'X' DIM
3580	148D	##	JR351D	735A	X-DIM	SM() LTP/ / OR SMC // DLTU3 / /	( )- ( ) SEE TBL CX1	140	*		SD5D501-01		DSX								3		FORM PER ED5D503-32 G351D (MAX. CABLE LENGTH SHALL NOT EXCEED 655 FT.) (OUT) * POSTION IS "LEFT" FOR DFI'S 1-10 AND RIGHT FOR DFI'S 11-20 (AS SPECFIED). (MESH GRD) ## FCAB REQUIRES A QUANTITY OF 2(TWO) FOR PROPER CABLE LENGTH BECAUSE ED5D503-32,GR351D CONSIST OF 2(TWO) LENGTHS OF 735A CA,EACH WITH THE SAME 'X' DIM
3581	149	##	JR352	KS19224L1	X-DIM	SM() LTP/ / OR SMC // DLTU3 / / OR CSU/ /	( )- ( ) SEE TBL CX1 OR CX1B	340	*		SD5D501-01		DSX								3		FORM PER ED5D503-32 G 352 (MAX CABLE LENGTH SHALL NOT EXCEED 655 FT). (IN) * POSTION IS "LEFT" FOR DLTU3 DFI'S 1-10 AND CSU DFI'S 1-5 AND RIGHT FOR DLTU3 DFI'S 11-20 (AS SPECIFIED). (SINGLE POINT GRD) ## FCAB REQUIRES A QUANTITY OF 2(TWO) FOR PROPER CABLE LENGTH BECAUSE ED5D503-32,GR352 CONSIST OF 2(TWO) LENGTHS OF KS19224L1 CA,EACH WITH THE SAME 'X' DIM.
3591	149	##	JR353	KS19224L1	X-DIM	SM() LTP/ / OR SMC // DLTU3 / / OR CSU/ /	( )- ( ) SEE TBL CX1 OR CX1B	140	*		SD5D501-01		DSX								3		FORM PER ED5D503-32 G 353 (MAX. CABLE LENGTH SHALL NOT EXCEED 655 FT.) (OUT) * POSTION IS "LEFT" FOR DFI'S 1-10 AND RIGHT FOR DFI'S 11-20 (AS SPECFIED). (SINGLE POINT GRD) ## FCAB REQUIRES A QUANTITY OF 2(TWO) FOR PROPER CABLE LENGTH BECAUSE ED5D503-32,GR353 CONSIST OF 2(TWO) LENGTHS OF KS19224L1 CA, EACH WITH THE SAME 'X' DIM

COPYRIGHT @ 2001 LUCENT TECHNOLOGIES
ALL RIGHTS RESERVED

BT13

INTERCABINET CABLING
FOR
5ESS * SWITCH
*LUCENT TRADEMARK

DWG SIZE C2 | ISSUE 117

LUCENT TECHNOLOGIES INC | ED5D500-21 | SHEET A113 OF 292

PRINTED IN U.S.A.

CONNECTORIZED CABLING

ITEM	LIST OR GROUP	NBR RECD	CABLE IDENT	CABLE CODE	B DIM	FROM							TO							ROUTE	SHLD	NOTE	REMARKS
						FRAME OR UNIT	EQL	TERM	POS	DROP LGTH	WIRING DIAGRAM	FIGURE	FRAME OR UNIT	EQL	TERM	POS	DROP LGTH	WIRING DIAGRAM	FIGURE				
3593	149A	##	JR352B	KS19224L1	X-DIM	SM() LTP/ / OR SMC // DLTU3 / /	( )- ( ) SEE TBL CX1	340	*		SD5D501-01		DSX								3		FORM PER ED5D503-32 G352B (MAX CABLE LENGTH SHALL NOT EXCEED 655 FT). (IN) * POSTION IS "LEFT" FOR DFI'S 1-10 AND RIGHT FOR DFI'S 11-20 (AS SPECIFIED). (MESH GRD) ## FCAB REQUIRES A QUANTITY OF 2(TWO) FOR PROPER CABLE LENGTH BECAUSE ED5D503-32,GR352B CONSIST OF 2(TWO) LENGTHS OF KS19224L1 CA, EACH WITH THE SAME 'X' DIM
3594	149A	##	JR353B	KS19224L1	X-DIM	SM() LTP/ / OR SMC // DLTU3 / /	( )- ( ) SEE TBL CX1	140	*		SD5D501-01		DSX								3		FORM PER ED5D503-32 G353B (MAX. CABLE LENGTH SHALL NOT EXCEED 655 FT.) (OUT) * POSTION IS "LEFT" FOR DFI'S 1-10 AND RIGHT FOR DFI'S 11-20 (AS SPECFIED). (MESH GRD) ## FCAB REQUIRES A QUANTITY OF 2(TWO) FOR PROPER CABLE LENGTH BECAUSE ED5D503-32,GR353B CONSIST OF 2(TWO) LENGTHS OF CA, EACH WITH THE SAME 'X' DIM
3595	150	1	JR322B	800A	X-DIM	SM() LTP// OR SMC // DLTU3 //	( )- 052	132 145 332 345	L	SEE TBL BB2	SD5D501-01		DSX										FORM PER ED5D503-32 G322B IN MAXIMUM LENGTH SHALL NOT EXCEED 655 FEET.
3596	150	1	JR323B	800A	X-DIM	SM() LTP// OR SMC // DLTU3 //	( )- 052	100 113 300 313	L	SEE TBL BB2	SD5D501-01		DSX										FORM PER ED5D503-32 G323B OUT MAXIMUM LENGTH SHALL NOT EXCEED 655 FEET.
3597	151	1	JR324B	800A	X-DIM	SM() LTP// OR SMC // DLTU3 //	( )- 136	132 145 332 345	R	SEE TBL BB2	SD5D501-01		DSX										FORM PER ED5D503-32 G324B IN MAXIMUM LENGTH SHALL NOT EXCEED 655 FEET.
3598	151	1	JR325B	800A	X-DIM	SM() LTP// OR SMC // DLTU3 //	( )- 136	100 113 300 313	R	SEE TBL BB2	SD5D501-01		DSX										FORM PER ED5D503-32 G325B OUT MAXIMUM LENGTH SHALL NOT EXCEED 655 FEET.
3599	152	1	JR758	807A	X-DIM	SM() LTP// DLTUE// OR SMC1	( )- 019- 029- 039- 049- 059- 069- 079- 089- 099- 109- 119- 129- 139- 149- 159- 169-	 341 341 341 341 341 341 341 341 341 341 341 341 341 341 341 341	L	SEE TBL BB3	SD5X204-01		DF								3		FORM PER ED5D503-30 G 758 (IN) DLTU - EXPORT (2 CKT) DFI'S CIRCUIT B ONLY (DFI 1-16) 963T TYPE CONNECTORS TERMINATE AT EACH DFI.

COPYRIGHT @ 2001 LUCENT TECHNOLOGIES
ALL RIGHTS RESERVED

BT13

INTERCABINET CABLING
FOR
5ESS * SWITCH
*LUCENT TRADEMARK

DWG SIZE C2 | ISSUE 117

PRINTED IN U.S.A.

CONNECTORIZED CABLING

ITEM	LIST OR GROUP	NBR RECD	CABLE IDENT	CABLE CODE	B DIM	FROM							TO							ROUTE	SHLD	NOTE	REMARKS
						FRAME OR UNIT	EQL	TERM	POS	DROP LGTH	WIRING DIAGRAM	FIGURE	FRAME OR UNIT	EQL	TERM	POS	DROP LGTH	WIRING DIAGRAM	FIGURE				
3600	152	1	JR758A	807A	X-DIM	SM() LTP// DLTUE// OR SMC1	( )- 019- 029- 039- 049- 059- 069- 079- 089- 099- 109- 119- 129- 139- 149- 159- 169-	 338 338 338 338 338 338 338 338 338 338 338 338 338 338 338 338	L	SEE TBL BB3	SD5X204-01		DF								3		FORM PER ED5D503-30 G758A (OUT) DLTU - EXPORT (2 CKT) DFI'S CIRCUIT B ONLY (DFI 1-16) 963T TYPE CONNECTORS TERMINATE AT EACH DFI.
3601	152A	1	JR762	1249016A	X-DIM	SM() LTP// DLTUE// OR SMC1	( )- 019- 029- 039- 049- 059- 069- 079- 089- 099- 109- 119- 129- 139- 149- 159- 169-	 341 341 341 341 341 341 341 341 341 341 341 341 341 341 341 341	L	SEE TBL BB3	SD5X204-01		DF								3		FORM PER ED5D503-30 G 762 (IN) DLTU - EXPORT (2 CKT) DFI'S CIRCUIT B ONLY (DFI 1-16). 963T TYPE CONNECTORS TERMINATE AT EACH DFI.
3602	152A	1	JR762A	1249016A	X-DIM	SM() LTP// DLTUE// OR SMC1	( )- 019- 029- 039- 049- 059- 069- 079- 089- 099- 109- 119- 129- 139- 149- 159- 169-	 338 338 338 338 338 338 338 338 338 338 338 338 338 338 338 338	L	SEE TBL BB3	SD5X204-01		DF								3		FORM PER ED5D503-30 G762A (OUT) DLTU - EXPORT (2 CKT) DFI'S CIRCUIT B ONLY (DFI 1-16). 963T TYPE CONNECTORS TERMINATE AT EACH DFI.
3603	153	1	JR760	807A	X-DIM	SM() LTP// DLTUE// OR SMC1	( )- 019- 019- 029- 029- 039- 039- 049- 049- 059- 059- 069- 069- 079- 079- 089- 089-	 341 132 341 132 341 132 341 132 341 132 341 132 341 132 341 132	L	SEE TBL BB3	SD5X204-01		DF								3		FORM PER ED5D503-30 G 760 (IN) DLTU - EXPORT (2 CKT) DFI'S CIRCUITS A & B (DFI 1-8) 963T TYPE CONNECTORS TERMINATE AT EACH DFI.

COPYRIGHT @ 2001 LUCENT TECHNOLOGIES
ALL RIGHTS RESERVED

BT13

INTERCABINET CABLING
FOR
5ESS * SWITCH
*LUCENT TRADEMARK

DWG SIZE C2 | ISSUE 117

PRINTED IN U.S.A.

CONNECTORIZED CABLING

ITEM	LIST OR GROUP	NBR RECD	CABLE IDENT	CABLE CODE	B DIM	FROM							TO							ROUTE	SHLD	NOTE	REMARKS
						FRAME OR UNIT	EQL	TERM	POS	DROP LGTH	WIRING DIAGRAM	FIGURE	FRAME OR UNIT	EQL	TERM	POS	DROP LGTH	WIRING DIAGRAM	FIGURE				
3604	153	1	JR760A	807A	X-DIM	SM() LTP// DLTUE// OR SMC1	( )- 019- 019- 029- 029- 039- 039- 049- 049- 059- 059- 069- 069- 079- 079- 089- 089-	 338 106 338 106 338 106 338 106 338 106 338 106 338 106 338 106	L	SEE TBL BB3	SD5X204-01		DF								3		FORM PER ED5D503-30 G760A (OUT) DLTU - EXPORT (2 CKT) DFI'S CIRCUITS A & B (DFI 1-8) 963T TYPE CONNECTORS TERMINATE AT EACH DFI.
3605	153A	1	JR764	1249016A	X-DIM	SM() LTP// DLTUE// OR SMC1	( )- 019- 019- 029- 029- 039- 039- 049- 049- 059- 059- 069- 069- 079- 079- 089- 089-	 341 132 341 132 341 132 341 132 341 132 341 132 341 132 341 132	L	SEE TBL BB3	SD5X204-01		DF								3		FORM PER ED5D503-30 G 764 (IN) DLTU - EXPORT (2 CKT) DFI'S CIRCUITS A & B (DFI 1-8) 963T TYPE CONNECTORS TERMINATE AT EACH DFI.
3606	153A	1	JR764A	1249016A	X-DIM	SM() LTP// DLTUE// OR SMC1	( )- 019- 019- 029- 029- 039- 039- 049- 049- 059- 059- 069- 069- 079- 079- 089- 089-	 338 106 338 106 338 106 338 106 338 106 338 106 338 106 338 106	L	SEE TBL BB3	SD5X204-01		DF								3		FORM PER ED5D503-30 G764A (OUT) DLTU - EXPORT (2 CKT) DFI'S CIRCUITS A & B (DFI 1-8) 963T TYPE CONNECTORS TERMINATE AT EACH DFI.
3607	154	1	JR761	807A	X-DIM	SM() LTP// DLTUE// OR SMC1	( )- 099- 099- 109- 109- 119- 119- 129- 129- 139- 139- 149- 149- 159- 159- 169- 169-	 341 132 341 132 341 132 341 132 341 132 341 132 341 132 341 132	R	SEE TBL BB3	SD5X204-01		DF								3		FORM PER ED5D503-30 G 761 (IN) DLTU - EXPORT (2 CKT) DFI'S CIRCUITS A & B (DFI 9-16) 963T TYPE CONNECTORS TERMINATE AT EACH DFI.

COPYRIGHT @ 2001 LUCENT TECHNOLOGIES
ALL RIGHTS RESERVED

BT13

INTERCABINET CABLING
FOR
5ESS * SWITCH
*LUCENT TRADEMARK

DWG SIZE C2 | ISSUE 117

PRINTED IN U.S.A.

CONNECTORIZED CABLING

ITEM	LIST OR GROUP	NBR RECD	CABLE IDENT	CABLE CODE	B DIM	FROM							TO							ROUTE	SHLD	NOTE	REMARKS
						FRAME OR UNIT	EQL	TERM	POS	DROP LGTH	WIRING DIAGRAM	FIGURE	FRAME OR UNIT	EQL	TERM	POS	DROP LGTH	WIRING DIAGRAM	FIGURE				
3608	154	1	JR761A	807A	X-DIM	SM() LTP// DLTUE// OR SMC1	( )- 099- 099- 109- 109- 119- 119- 129- 129- 139- 139- 149- 149- 159- 159- 169- 169-	 338 106 338 106 338 106 338 106 338 106 338 106 338 106 338 106	R	SEE TBL BB3	SD5X204-01		DF								3		FORM PER ED5D503-30 G761A (OUT) DLTU - EXPORT (2 CKT) DFI'S CIRCUITS A & B (DFI 9-16) 963T TYPE CONNECTORS TERMINATE AT EACH DFI.
3609	154A	1	JR765	1249016A	X-DIM	SM() LTP// DLTUE// OR SMC1	( )- 099- 099- 109- 109- 119- 119- 129- 129- 139- 139- 149- 149- 159- 159- 169- 169-	 341 132 341 132 341 132 341 132 341 132 341 132 341 132 341 132	R	SEE TBL BB3	SD5X204-01		DF								3		FORM PER ED5D503-30 G 765 (IN) DLTU - EXPORT (2 CKT) DFI'S CIRCUITS A & B (DFI 9-16) 963T TYPE CONNECTORS TERMINATE AT EACH DFI.
3611	154A	1	JR765A	1249016A	X-DIM	SM() LTP// DLTUE// OR SMC1	( )- 099- 099- 109- 109- 119- 119- 129- 129- 139- 139- 149- 149- 159- 159- 169- 169-	 338 106 338 106 338 106 338 106 338 106 338 106 338 106 338 106	R	SEE TBL BB3	SD5X204-01		DF								3		FORM PER ED5D503-30 G765A (OUT) DLTU - EXPORT (2 CKT) DFI'S CIRCUITS A & B (DFI 9-16) 963T TYPE CONNECTORS TERMINATE AT EACH DFI.
3620	155	1	JR768	KS19224L1	X-DIM	SM() LTP/ / OR SMC // DLTU-E / /	( )- ( ) SEE TBL CX2	132			SD5X204-01		DSX								3		FORM PER ED5D503-30 G 768 (MAX CABLE LENGTH SHALL NOT EXCEED 655 FT).(IN A-CKT)
3630	155	1	JR768A	KS19224L1	X-DIM	SM() LTP/ / OR SMC // DLTU-E / /	( )- ( ) SEE TBL CX2	106			SD5X204-01		DSX								3		FORM PER ED5D503-30 G768A (MAX CABLE LENGTH SHALL NOT EXCEED 655 FT).(OUT A-CKT)

COPYRIGHT @ 2001 LUCENT TECHNOLOGIES
ALL RIGHTS RESERVED

BT13

INTERCABINET CABLING
FOR
5ESS * SWITCH
*LUCENT TRADEMARK

DWG SIZE C2 | ISSUE 117

PRINTED IN U.S.A.

CONNECTORIZED CABLING

ITEM	LIST OR GROUP	NBR RECD	CABLE IDENT	CABLE CODE	B DIM	FROM							TO							ROUTE	SHLD	NOTE	REMARKS
						FRAME OR UNIT	EQL	TERM	POS	DROP LGTH	WIRING DIAGRAM	FIGURE	FRAME OR UNIT	EQL	TERM	POS	DROP LGTH	WIRING DIAGRAM	FIGURE				
3631	155A	1	JR766	735A	X-DIM	SM() LTP/ / OR SMC // DLTU-E / /	( )- ( ) SEE TBL CX2	132			SD5X204-01		DSX								3		FORM PER ED5D503-30 G 766 (MAX CABLE LENGTH SHALL NOT EXCEED 655 FT).(IN A-CKT)
3632	155A	1	JR766A	735A	X-DIM	SM() LTP/ / OR SMC // DLTU-E / /	( )- ( ) SEE TBL CX2	106			SD5X204-01		DSX								3		FORM PER ED5D503-30 G766A (MAX CABLE LENGTH SHALL NOT EXCEED 655 FT).(OUT A-CKT)
3640	155	1	JR769	KS19224L1	X-DIM	SM() LTP/ / OR SMC // DLTU-E / /	( )- ( ) SEE TBL CX2	341			SD5X204-01		DSX								3		FORM PER ED5D503-30 G 769 (MAX CABLE LENGTH SHALL NOT EXCEED 655 FT).(IN B-CKT)
3642	155	1	JR769B	KS19224L1	X-DIM	SM() LTP/ / OR SMC // DLTU-E / /	( )- ( ) SEE TBL CX2	338			SD5X204-01		DSX								3		FORM PER ED5D503-30 G769B (MAX CABLE LENGTH SHALL NOT EXCEED 655 FT).(OUT B-CKT)
3644	155A	1	JR767	735A	X-DIM	SM() LTP/ / OR SMC // DLTU-E / /	( )- ( ) SEE TBL CX2	341			SD5X204-01		DSX								3		FORM PER ED5D503-30 G 767 (MAX CABLE LENGTH SHALL NOT EXCEED 655 FT).(IN B-CKT)
3646	155A	1	JR767B	735A	X-DIM	SM() LTP/ / OR SMC // DLTU-E / /	( )- ( ) SEE TBL CX2	338			SD5X204-01		DSX								3		FORM PER ED5D503-30 G767B (MAX CABLE LENGTH SHALL NOT EXCEED 655 FT).(OUT B-CKT)
3990	156C 157C 158C 159C	1	JR211C	810A	X-DIM	LNI/ /	/ /- / / SEE RMKS		L OR R		SD-5D097-01		DF		CONN						3		FORM PER ED5D503-30 G211C GRIDS 0 & 1 SEE J5D009B-1 NOTE 12 FOR EQL ASGNT.
4000	156C 157C 158C 159C	1	JR213C	810A	X-DIM	LNI/ /	/ /- / / SEE RMKS		L OR R		SD-5D097-01		DF		CONN						3		FORM PER ED5D503-30 G213C GRIDS 2 & 3 SEE J5D009B-1 NOTE 12 FOR EQL ASGNT.
4010	157C 158C 159C	1	JR212C	810A	X-DIM	LNI/ /	/ /- / / SEE RMKS		L OR R		SD-5D097-01		DF		CONN						3		FORM PER ED5D503-30 G212C GRIDS 4 & 5 SEE J5D009B-1 NOTE 12 FOR EQL ASGNT.
4020	158C 159C	1	JR214C	810A	X-DIM	LNI/ /	/ /- / / SEE RMKS		L OR R		SD-5D097-01		DF		CONN						3		FORM PER ED5D503-30 G214C GRIDS 6 & 7 SEE J5D009B-1 NOTE 12 FOR EQL ASGNT.
4025	159C	1	JR215C	810A	X-DIM	LNI//	//- // SEE RMKS		L/R		SD5D097-01		DF		711 CONN						3		FORM PER ED5D503-30 G215C GRIDS 8 & 9 SEE J5D009B-1 NOTE 12 FOR EQL ASGNT.

COPYRIGHT @ 2001 LUCENT TECHNOLOGIES
ALL RIGHTS RESERVED

BT13

INTERCABINET CABLING
FOR
5ESS * SWITCH
*LUCENT TRADEMARK

DWG SIZE C2 | ISSUE 117

LUCENT TECHNOLOGIES INC | ED5D500-21 | SHEET A118 OF 292

PRINTED IN U.S.A.

CONNECTORIZED CABLING

ITEM	LIST OR GROUP	NBR RECD	CABLE IDENT	CABLE CODE	B DIM	FROM							TO							ROUTE	SHLD	NOTE	REMARKS
						FRAME OR UNIT	EQL	TERM	POS	DROP LGTH	WIRING DIAGRAM	FIGURE	FRAME OR UNIT	EQL	TERM	POS	DROP LGTH	WIRING DIAGRAM	FIGURE				
4030	156D 157D 158D 159D	1	JR211D	810A	X-DIM	LNI/ /	/ /- / / SEE RMKS		L OR R		SD-5D097-01		DF								3	199 59	BULK CABLE GRIDS 0 & 1 SEE J5D009B-1 NOTE 12 FOR EQL ASGNT. SEE MISC TABLE T
4040	156D 157D 158D 159D	1	JR213D	810A	X-DIM	LNI/ /	/ /- / / SEE RMKS		L OR R		SD-5D097-01		DF								3	199 59	BULK CABLE GRIDS 2 & 3 SEE J5D009B-1 NOTE 12 FOR EQL ASGNT. SEE MISC TABLE T
4050	157D 158D 159D	1	JR212D	810A	X-DIM	LNI/ /	/ /- / / SEE RMKS		L OR R		SD-5D097-01		DF								3	199 59	BULK CABLE GRIDS 4 & 5 SEE J5D009B-1 NOTE 12 FOR EQL ASGNT. SEE MISC TABLE T
4060	158D 159D	1	JR214D	810A	X-DIM	LNI/ /	/ /- / / SEE RMKS		L OR R		SD-5D097-01		DF								3	199 59	BULK CABLE GRIDS 6 & 7 SEE J5D009B-1 NOTE 12 FOR EQL ASGNT. SEE MISC TABLE T
4070	159D	1	JR215D	810A	X-DIM	LNI//	//- // SEE RMKS		L/R		SD5D097-01		DF								3	199 59	BULK CABLE GRIDS 8 & 9 SEE J5D009B-1 NOTE 12 FOR EQL ASGNT. SEE MISC TABLE T
4080	160	1	JR31	285A	X-DIM	SM( ) LTP/ / OR SMC1 LU/ /	/J3/ ( )- (*) /J4/ ( )- (*)	322 322	L	SEE TBL BP	SD-5D052-01		SM( ) LTP/ / OR SMC1 MMSU/ /	/J1/ ( )- ( ) /J2/ ( )- ( )	( ) ( ) SEE TBL CC	L	SEE TBL DA & DB	SD-5D016-01			3		FORM PER ED5D503-30 G 31 UNIT LEVEL 04 & 13. (*) WHEN LU2 (J5D004AC) IS SPECIFIED, HOR EQL SHALL BE 096, WHEN LU3(J5D004AD) IS SPECIFIED, HOR EQL SHALL BE 084.
4090	161	1	JR32	285A	X-DIM	SM( ) LTP/ / OR SMC1 LU2/ / OR LU2-E//	/J3/ ( )- (*) /J4/ ( )- (*)	322 322	R	SEE TBL BP	SD-5D052-01 OR SD-5X205-01		SM( ) LTP/ / OR SMC1 MMSU/ /	/J1/ ( )- ( ) /J2/ ( )- ( )	( ) ( ) SEE TBL CC	R	SEE TBL DA & DB	SD-5D016-01			3		FORM PER ED5D503-30 G 32 UNIT LEVEL 04 & 13. (*) WHEN LU2 (J5D004AC) IS SPECIFIED, HOR EQL SHALL BE 096, WHEN LU3 (J5D004AD) IS SPECIFIED, HOR EQL SHALL BE 084.
4092	162	1	JR20	285A	X-DIM	SM( ) LTP/ / OR SMC1 LU2/ / OR LU2-E//	/J3/ ( )- (*) /J4/ ( )- (*)	322 322	L	SEE TBL BP	SD-5D052-01 OR SD-5X205-01		SM( ) LTP/ / OR SMC1 MMSU/ /	/J1/ ( )- ( ) /J2/ ( )- ( )	( ) ( ) SEE TBL CC	R/L	SEE TBL DA & DB	SD-5D016-01			3		FORM PER ED5D503-30 G 20 UNIT LEVEL 04 & 13. (*) WHEN LU2 (J5D004AC) IS SPECIFIED, HOR EQL SHALL BE 096, WHEN LU3 (J5D004AD) IS SPECIFIED, HOR EQL SHALL BE 084.
4100	170	1	JR250	97A	X-DIM	SM( ) LTP/ / PPMU/ /	( ) 052 ( )- 068 ( )- 084 ( )- 100 ( )- 116 ( )- 132 ( )- 148 ( )- 164	100 PER EQL	R	SEE TBL BS	SD-5X202-01		DF		CONN							3		

COPYRIGHT @ 2001 LUCENT TECHNOLOGIES
ALL RIGHTS RESERVED

BT13

INTERCABINET CABLING
FOR
5ESS * SWITCH
*LUCENT TRADEMARK

DWG SIZE C2 | ISSUE 117

LUCENT TECHNOLOGIES INC | ED5D500-21 | SHEET A119 OF 292

PRINTED IN U.S.A.

CONNECTORIZED CABLING

ITEM	LIST OR GROUP	NBR RECD	CABLE IDENT	CABLE CODE	B DIM	FROM							TO							ROUTE	SHLD	NOTE	REMARKS
						FRAME OR UNIT	EQL	TERM	POS	DROP LGTH	WIRING DIAGRAM	FIGURE	FRAME OR UNIT	EQL	TERM	POS	DROP LGTH	WIRING DIAGRAM	FIGURE				
4110	170	1	JR251	97A	X-DIM	SM( ) LTP/ / PPMU/ /	( )-052 ( )-068 ( )-084 ( )-100 ( )-116 ( )-132 ( )-148 ( )-164	113 PER EQL	L	SEE TBL BS	SD-5X202-01		DF		CONN						3		
4120	170A	1	JR250A	97A	X-DIM	SM( ) LTP/ / PPMU/ /	( )-052 ( )-068 ( )-084 ( )-100 ( )-116 ( )-132 ( )-148 ( )-164	100 PER EQL	R	SEE TBL BS	SD-5X202-01		DF								3		
4130	170A	1	JR251A	97A	X-DIM	SM( ) LTP/ / PPMU/ /	( )-052 ( )-068 ( ) 084 ( )-100 ( )-116 ( )-132 ( )-148 ( )-164	113 PER EQL	L	SEE TBL BS	SD-5X202-01		DF								3		
4140	175 176 177	1	JR211C	810A	X-DIM	LNI/ /	/ /- / / SEE RMKS		L OR R		SD-5D097-01		DF		CONN						3		FORM PER ED5D503-30 G211C GRIDS 0 & 1 SEE J5D009B-1 NOTE 12 FOR EQL ASGNT.
4150	175 176 177	1	JR213C	810A	X-DIM	LNI/ /	/ /- / / SEE RMKS		L OR R		SD-5D097-01		DF		CONN						3		FORM PER ED5D503-30 G213C GRIDS 2 & 3 SEE J5D009B-1 NOTE 12 FOR EQL ASGNT.
4160	176 177	1	JR212C	810A	X-DIM	LNI/ /	/ /- / / SEE RMKS		L OR R		SD-5D097-01		DF		CONN						3		FORM PER ED5D503-30 G212C GRIDS 4 & 5 SEE J5D009B-1 NOTE 12 FOR EQL ASGNT.
4170	177	1	JR214C	810A	X-DIM	LNI/ /	/ /- / / SEE RMKS		L OR R		SD-5D097-01		DF		CONN						3		FORM PER ED5D503-30 G214C GRIDS 6 & 7 SEE J5D009B-1 NOTE 12 FOR EQL ASGNT.

COPYRIGHT @ 2001 LUCENT TECHNOLOGIES
ALL RIGHTS RESERVED

BT13

INTERCABINET CABLING
FOR
5ESS * SWITCH
*LUCENT TRADEMARK

DWG SIZE C2 | ISSUE 117

PRINTED IN U.S.A.

CONNECTORIZED CABLING

ITEM	LIST OR GROUP	NBR RECD	CABLE IDENT	CABLE CODE	B DIM	FROM							TO							ROUTE	SHLD	NOTE	REMARKS
						FRAME OR UNIT	EQL	TERM	POS	DROP LGTH	WIRING DIAGRAM	FIGURE	FRAME OR UNIT	EQL	TERM	POS	DROP LGTH	WIRING DIAGRAM	FIGURE				
4180	175 176 177	1	JR211E	810A	X-DIM	LNI/ /	/ /- / / SEE RMKS		L OR R		SD-5D097-01		DF		CONN						3		FORM PER ED5D503-30 G211E GRIDS 0 & 1 SEE J5D009B-1 NOTE 12 FOR EQL ASGNT.
4190	175 176 177	1	JR213E	810A	X-DIM	LNI/ /	/ /- / / SEE RMKS		L		SD-5D097-01		DF		CONN						3		FORM PER ED5D503-30 G213E GRIDS 2 & 3 SEE J5D009B-1 NOTE 12 FOR EQL ASGNT.
4200	176 177	1	JR212E	810A	X-DIM	LNI/ /	/ /- / / SEE RMKS		L OR R		SD-5D097-01		DF		CONN						3		FORM PER ED5D503-30 G212E GRIDS 4 & 5 SEE J5D009B-1 NOTE 12 FOR EQL ASGNT.
4210	177	1	JR214E	810A	X-DIM	LNI/ /	/ /- / / SEE RMKS		L OR R		SD-5D097-01		DF		CONN						3		FORM PER ED5D503-30 G214E GRIDS 6 & 7 SEE J5D009B-1 NOTE 12 FOR EQL ASGNT.
4220	175A 176A 177A	1	JR211D	810A	X-DIM	LNI//	/ /- / / SEE RMKS		L OR R		SD5D097-01		DF								3	199 59	BULK CABLE GRIDS 0 & 1 SEE J5D009B-1 NOTE 12 FOR EQL ASGNT. SEE MISC TABLE T
4230	175A 176A 177A	1	JR213D	810A	X-DIM	LNI/ /	/ /- / / SEE RMKS		L OR R		SD-5D097-01		DF								3	199 59	BULK CABLE GRIDS 2 & 3 SEE J5D009B-1 NOTE 12 FOR EQL ASGNT. SEE MISC TABLE T
4240	176A 177A	1	JR212D	810A	X-DIM	LNI/ /	/ /- / / SEE RMKS		L OR R		SD-5D097-01		DF								3	199 59	BULK CABLE GRIDS 4 & 5 SEE J5D009B-1 NOTE 12 FOR EQL ASGNT. SEE MISC TABLE T
4250	177A	1	JR214D	810A	X-DIM	LNI/ /	/ /- / / SEE RMKS		L OR R		SD-5D097-01		DF								3	199 59	BULK CABLE GRIDS 6 & 7 SEE J5D009B-1 NOTE 12 FOR EQL ASGNT. SEE MISC TABLE T
4260	175A 176A 177A	1	JR211F	810A	X-DIM	LNI/ /	/ /- / / SEE RMKS		L OR R		SD-5D097-01		DF								3	199 59	BULK CABLE GRIDS 0 & 1 SEE J5D009B-1 NOTE 12 FOR EQL ASGNT. SEE MISC TABLE T
4270	175A 176A 177A	1	JR213F	810A	X-DIM	LNI/ /	/ /- / / SEE RMKS		L OR R		SD-5D097-01		DF								3	199 59	BULK CABLE GRIDS 2 & 3 SEE J5D009B-1 NOTE 12 FOR EQL ASGNT. SEE MISC TABLE T
4280	176A 177A	1	JR212F	810A	X-DIM	LNI/ /	/ /- / / SEE RMKS		L OR R		SD-5D097-01		DF								3	199 59	BULK CABLE GRIDS 4 & 5 SEE J5D009B-1 NOTE 12 FOR EQL ASGNT. SEE MISC TABLE T
4290	177A	1	JR214F	810A	X-DIM	LNI/ /	/ /- / / SEE RMKS		L OR R		SD-5D097-01		DF								3	199 59	BULK CABLE GRIDS 6 & 7 SEE J5D009B-1 NOTE 12 FOR EQL ASGNT. SEE MISC TABLE T
5000	180 181 182	1	JR261	810A	X-DIM	SM/ / LTP/ / LU2/ /	/ /- 111 / /- 119 / /- 127 / /- 135	000 013 032 045 PER EQL	L	SEE TBL BP	SD-5D052-01 OR SD-5X205-01		DF		CONN 711						3	88 90	FORM PER ED5D503-30 G 261 UNIT LEV 04 GRID 0 & 1 NO STAMPING REQUIRED.

COPYRIGHT @ 2001 LUCENT TECHNOLOGIES
ALL RIGHTS RESERVED

BT13

INTERCABINET CABLING
FOR
5ESS * SWITCH
*LUCENT TRADEMARK

DWG SIZE C2 | ISSUE 117

PRINTED IN U.S.A.

CONNECTORIZED CABLING

ITEM	LIST OR GROUP	NBR RECD	CABLE IDENT	CABLE CODE	B DIM	FROM							TO							ROUTE	SHLD	NOTE	REMARKS
						FRAME OR UNIT	EQL	TERM	POS	DROP LGTH	WIRING DIAGRAM	FIGURE	FRAME OR UNIT	EQL	TERM	POS	DROP LGTH	WIRING DIAGRAM	FIGURE				
5010	180 181 182	1	JR262	810A	X-DIM	SM/ / LTP/ / LU2/ /	/ /- 143 / /- 151 / /- 159 / /- 167	000 013 032 045 PER EQL	R	SEE TBL BP	SD-5D052-01 OR SD-5X205-01		DF		CONN 711						3	88 90	FORM PER ED5D503-30 G 262 UNIT LEV 04 GRID 2 & 3 NO STAMPING REQUIRED.
5020	181 182 |	1	JR263	810A	X-DIM	SM/ / LTP/ / LU2/ /	/ /- 111 / /- 119 / /- 127 / /- 135	000 013 032 045 PER EQL	L	SEE TBL BP	SD-5D052-01 SD-5X205-01 OR		DF		CONN 711						3	88 90	FORM PER ED5D503-30 G 263 UNIT LEV 13 GRID 4 & 5 NO STAMPING REQUIRED.
5030	182 |	1	JR264	810A	X-DIM	SM/ / LTP/ / LU2/ /	/ /- 143 / /- 151 / /- 159 / /- 167	000 013 032 045 PER EQL	R	SEE TBL BP	SD-5D052-01 OR SD-5X205-01		DF		CONN 711						3	88 90	FORM PER ED5D503-30 G 264 UNIT LEV 13 GRID 6 & 7 NO STAMPING REQUIRED.
5040	180A 181A 182A	1	JR261A	810A	X-DIM	SM/ / LTP/ / LU2/ /	/ /- 111 / /- 119 / /- 127 / /- 135	000 013 032 045 PER EQL	L	SEE TBL BP	SD-5D052-01 OR SD-5X205-01		DF		SWC						3	90	FORM PER ED5D503-35 G261A UNIT LEV 04 GRID 0 & 1 NO STAMPING REQUIRED.
5050	180A 181A 182A	1	JR262A	810A	X-DIM	SM/ / LTP/ / LU2/ /	/ /- 143 / /- 151 / /- 159 / /- 167	000 013 032 045 PER EQL	R	SEE TBL BP	SD-5D052-01 OR SD-5X205-01		DF		SWC						3	90	FORM PER ED5D503-35 G262A UNIT LEV 04 GRID 2 & 3 NO STAMPING REQUIRED.
5060	181A 182A |	1	JR263A	810A	X-DIM	SM/ / LTP/ / LU2/ /	/ /- 111 / /- 119 / /- 127 / /- 135	000 013 032 045 PER EQL	L	SEE TBL BP	SD-5D052-01 SD-5X205-01 OR		DF		SWC						3	90	FORM PER ED5D503-35 G263A UNIT LEV 13 GRID 4 & 5 NO STAMPING REQUIRED.
5070	182A | |	1	JR264A	810A	X-DIM	SM/ / LTP/ / LU2/ /	/ /- 143 / /- 151 / /- 159 / /- 167	000 013 032 045 PER EQL	R	SEE TBL BP	SD-5D052-01 OR SD-5X205-01		DF		SWC						3	90	FORM PER ED5D503-35 G264A UNIT LEV 13 GRID 6 & 7 NO STAMPING REQUIRED.

COPYRIGHT @ 2001 LUCENT TECHNOLOGIES
ALL RIGHTS RESERVED

BT13

INTERCABINET CABLING
FOR
5ESS * SWITCH
*LUCENT TRADEMARK

DWG SIZE C2 | ISSUE 117

LUCENT TECHNOLOGIES INC | ED5D500-21 | SHEET A122 OF 292

PRINTED IN U.S.A.

CONNECTORIZED CABLING

ITEM	LIST OR GROUP	NBR RECD	CABLE IDENT	CABLE CODE	B DIM	FROM							TO							ROUTE	SHLD	NOTE	REMARKS
						FRAME OR UNIT	EQL	TERM	POS	DROP LGTH	WIRING DIAGRAM	FIGURE	FRAME OR UNIT	EQL	TERM	POS	DROP LGTH	WIRING DIAGRAM	FIGURE				
5080	180B 181B 182B	1	JR261B	810A	X-DIM	SM/ / LTP/ / LU2/ /	/ /- 111 / /- 119 / /- 127 / /- 135	000 013 032 045 PER EQL	L	SEE TBL BP	SD-5D052-01 OR SD05X205-01		LNI / /	/ /- / / SEE RMKS	L OR R						3	90	FORM PER ED5D503-35 G261B UNIT LEV 04 GRID 0 & 1 SEE J5D009B-1 NOTE 12 FOR EQL ASGNT. NO STAMPING REQUIRED.
5090	180B 181B 182B	1	JR262B	810A	X-DIM	SM/ / LTP/ / LU2/ /	/ /- 143 / /- 151 / /- 159 / /- 167	000 013 032 045 PER EQL	R	SEE TBL BP	SD-5D052-01 OR SD-5X205-01		LNI / /	/ /- / / SEE RMKS	L OR R						3	90	FORM PER ED5D503-35 G262B UNIT LEV 04 GRID 2 & 3 SEE J5D009B-1 NOTE 12 FOR EQL ASGNT. NO STAMPING REQUIRED.
5100	181B 182B	1	JR263B	810A	X-DIM	SM/ / LTP/ / LU2/ /	/ /- 111 / /- 119 / /- 127 / /- 135	000 013 032 045 PER EQL	L	SEE TBL BP	SD-5D052-01 SD-5X205-01 OR		LNI / /	/ /- / / SEE RMKS	L OR R						3	90	FORM PER ED5D503-35 G263B UNIT LEV 13 GRID 4 & 5 SEE J5D009B-1 NOTE 12 FOR EQL ASGNT. NO STAMPING REQUIRED.
5110	182B	1	JR264B	810A	X-DIM	SM/ / LTP/ / LU2/ /	/ /- 143 / /- 151 / /- 159 / /- 167	000 013 032 045 PER EQL	R	SEE TBL BP	SD-5D052-01 OR SD-5X205-01		LNI / /	/ /- / / SEE RMKS	L OR R						3	90	FORM PER ED5D503-35 G264B UNIT LEV 13 GRID 6 & 7 SEE J5D009B-1 NOTE 12 FOR EQL ASGNT. NO STAMPING REQUIRED.
5160	180D 181D 182D	1	JR261D	810A	X-DIM	SM// LTP// LU2//	/ /- 111 / /- 119 / /- 127 / /- 135	000 013 032 045 PER EQL	L	SEE TBL BP	SD-5D052-01		DF		CONN TLZN						3	90	FORM PER ED5D503-30 G261D UNIT LEV 04 GRID 0 & 1 NO STAMPING REQUIRED.
5165	180D 181D 182D	1	JR262D	810A	X-DIM	SM// LTP// LU2//	/ /- 143 / /- 151 / /- 159 / /- 167	000 013 032 045 PER EQL	R	SEE TBL BP	SD-5D052-01		DF		CONN TLZN						3	90	FORM PER ED5D503-30 G262D UNIT LEV 04 GRID 2 & 3 NO STAMPING REQUIRED.
5170	181D 182D	1	JR263D	810A	X-DIM	SM// LTP// LU2//	/ /- 111 / /- 119 / /- 127 / /- 135	000 013 032 045 PER EQL	L	SEE TBL BP	SD-5D052-01		DF		CONN TLZN						3	90	FORM PER ED5D503-30 G263D UNIT LEV 13 GRID 4 & 5 NO STAMPING REQUIRED.

COPYRIGHT @ 2001 LUCENT TECHNOLOGIES
ALL RIGHTS RESERVED

BT13

INTERCABINET CABLING
FOR
5ESS * SWITCH
*LUCENT TRADEMARK

DWG SIZE C2 | ISSUE 117

LUCENT TECHNOLOGIES INC | ED5D500-21 | SHEET A123 OF 292

PRINTED IN U.S.A.

CONNECTORIZED CABLING

ITEM	LIST OR GROUP	NBR RECD	CABLE IDENT	CABLE CODE	B DIM	FROM							TO							ROUTE	SHLD	NOTE	REMARKS
						FRAME OR UNIT	EQL	TERM	POS	DROP LGTH	WIRING DIAGRAM	FIGURE	FRAME OR UNIT	EQL	TERM	POS	DROP LGTH	WIRING DIAGRAM	FIGURE				
5175	182D	1	JR264D	810A	X-DIM	SM// LTP// LU2//	/ /- 143 / /- 151 / /- 159 / /- 167	000 013 032 045 PER EQL	R	SEE TBL BP	SD-5D052-01		DF		CONN TLZN						3	90	FORM PER ED5D503-30 G264D UNIT LEV 13 GRID 6 & 7 NO STAMPING IS REQUIRED.
5180	180E 181E 182E	1	JR261E	810A	X-DIM	SM// LTP// LU2//	/ /- 111 / /- 119 / /- 127 / /- 135	000 013 032 045 PER EQL	L	SEE TBL BP	SD-5D052-01		DF		TRW CONN						3	90	FORM PER ED5D503-30 G261E UNIT LEV 04 GRID 0,1 NO STAMPING IS REQUIRED.
5185	180E 181E 182E	1	JR262E	810A	X-DIM	SM// LTP// LU2//	/ /- 143 / /- 151 / /- 159 / /- 167	000 013 032 045 PER EQL	R	SEE TBL BP	SD-5D052-01		DF		TRW CONN						3	90	FORM PER ED5D503-30 G262E UNIT LEV 04 GRID 2,3 NO STAMPING IS REQUIRED.
5190	181E 182E	1	JR263E	810A	X-DIM	SM// LTP// LU2//	/ /- 111 / /- 119 / /- 127 / /- 135	000 013 032 045 PER EQL	L	SEE TBL BP	SD-5D052-01		DF		TRW CONN						3	90	FORM PER ED5D503-30 G263E UNIT LEV 13 GRID 4,5 NO STAMPING IS REQUIRED.
5195	182E	1	JR264E	810A	X-DIM	SM// LTP// LU2//	/ /- 143 / /- 151 / /- 159 / /- 167	000 013 032 045 PER EQL	R	SEE TBL BP	SD-5D052-01		DF		TRW CONN						3	90	FORM PER ED5D503-30 G264E UNIT LEV 13 GRID 6,7 NO STAMPING IS REQUIRED.
5200	183 184 185 186	1	JR281	810A	X-DIM	SM/ / LTP// LU3/ / OR SMC1	/ /- 099 / /- 107 / /- 099 / /- 107	000 013 032 045 PER EQL	L	SEE TBL BC	SD5D180-01		DF		711 CONN						3	88 90	FORM PER ED5D503-30 G 282 GRID 0 UNIT LEV 04 GRID 1 UNIT LEV 13 NO STAMPING IS REQUIRED.
5210	183 184 185 186	1	JR282	810A	X-DIM	SM/ / LTP// LU3/ / OR SMC1	/ /- 115 / /- 123 / /- 115 / /- 123	000 013 032 045 PER EQL	L	SEE TBL BC	SD5D180-01		DF		711 CONN						3	88 90	FORM PER ED5D503-30 G 282 GRID 2 UNIT LEV 04 GRID 3 UNIT LEV 13 NO STAMPING IS REQUIRED.

COPYRIGHT @ 2001 LUCENT TECHNOLOGIES
ALL RIGHTS RESERVED

BT13

INTERCABINET CABLING
FOR
5ESS * SWITCH
*LUCENT TRADEMARK

DWG SIZE C2 | ISSUE 117

LUCENT TECHNOLOGIES INC | ED5D500-21 | SHEET A124 OF 292

PRINTED IN U.S.A.

CONNECTORIZED CABLING

ITEM	LIST OR GROUP	NBR RECD	CABLE IDENT	CABLE CODE	B DIM	FROM							TO							ROUTE	SHLD	NOTE	REMARKS
						FRAME OR UNIT	EQL	TERM	POS	DROP LGTH	WIRING DIAGRAM	FIGURE	FRAME OR UNIT	EQL	TERM	POS	DROP LGTH	WIRING DIAGRAM	FIGURE				
5220	184 185 186	1	JR283	810A	X-DIM	SM/ / LTP// LU3/ / OR SMC1	/ /- 131 / /- 139 / /- 131 / /- 139	000 013 032 045 PER EQL	R	SEE TBL BC	SD5D180-01		DF		711 CONN						3	88 90	FORM PER ED5D503-30 G 283 GRID 4 UNIT LEV 04 GRID 5 UNIT LEV 13 NO STAMPING IS REQUIRED.
5230	185 186	1	JR284	810A	X-DIM	SM/ / LTP// LU3/ / OR SMC1	/ /- 147 / /- 155 / /- 147 / /- 155	000 013 032 045 PER EQL	R	SEE TBL BC	SD5D180-01		DF		711 CONN						3	88 90	FORM PER ED5D503-30 G 283 GRID 6 UNIT LEV 04 GRID 7 UNIT LEV 13 NO STAMPING IS REQUIRED.
5240	186	1	JR285	810A	X-DIM	SM/ / LTP// LU3/ / OR SMC1	/ /- 163 / /- 171 / /- 163 / /- 171	000 013 032 045 PER EQL	R	SEE TBL BC	SD5D180-01		DF		711 CONN						3	88 90	FORM PER ED5D503-30 G 283 GRID 8 UNIT LEV 04 GRID 9 UNIT LEV 13 NO STAMPING IS REQUIRED.
5250	183A 184A 185A 186A	1	JR281A	810A	X-DIM	SM/ / LTP// LU3// OR SMC1	/ /- 099 / /- 107 / /- 099 / /- 107	000 013 032 045 PER EQL	L	SEE TBL BC	SD5D180-01		DF		SWC						3	90	FORM PER ED5D503-35 G282A GRID 0 UNIT LEV 04 GRID 1 UNIT LEV 13 NO STAMPING IS REQUIRED.
5260	183A 184A 185A 186A	1	JR282A	810A	X-DIM	SM/ / LTP// LU3// OR SMC1	/ /- 115 / /- 123 / /- 115 / /- 123	000 013 032 045 PER EQL	L	SEE TBL BC	SD5D180-01		DF		SWC						3	90	FORM PER ED5D503-35 G282A GRID 2 UNIT LEV 04 GRID 3 UNIT LEV 13 NO STAMPING IS REQUIRED.
5270	184A 185A 186A	1	JR283A	810A	X-DIM	SM/ / LTP// LU3// OR SMC1	/ /- 131 / /- 139 / /- 131 / /- 139	000 013 032 045 PER EQL	R	SEE TBL BC	SD5D180-01		DF		SWC						3	90	FORM PER ED5D503-35 G283A GRID 4 UNIT LEV 04 GRID 5 UNIT LEV 13 NO STAMPING IS REQUIRED.
5280	185A 186A	1	JR284A	810A	X-DIM	SM/ / LTP// LU3// OR SMC1	/ /- 147 / /- 155 / /- 147 / /- 155	000 013 032 045 PER EQL	R	SEE TBL BC	SD5D180-01		DF		SWC						3	90	FORM PER ED5D503-35 G283A GRID 6 UNIT LEV 04 GRID 7 UNIT LEV 13 NO STAMPING IS REQUIRED.

COPYRIGHT @ 2001 LUCENT TECHNOLOGIES
ALL RIGHTS RESERVED

BT13

INTERCABINET CABLING
FOR
5ESS * SWITCH
*LUCENT TRADEMARK

DWG SIZE C2 | ISSUE 117

PRINTED IN U.S.A.

CONNECTORIZED CABLING

ITEM	LIST OR GROUP	NBR RECD	CABLE IDENT	CABLE CODE	B DIM	FROM							TO							ROUTE	SHLD	NOTE	REMARKS
						FRAME OR UNIT	EQL	TERM	POS	DROP LGTH	WIRING DIAGRAM	FIGURE	FRAME OR UNIT	EQL	TERM	POS	DROP LGTH	WIRING DIAGRAM	FIGURE				
5290	186A	1	JR285A	810A	X-DIM	SM/ / LTP// LU3// OR SMC1	/ /- 163 / /- 171 / /- 163 / /- 171	000 013 032 045 PER EQL	R	SEE TBL BC	SD5D180-01		DF		SWC						3	90	FORM PER ED5D503-35 G283A GRID 8 UNIT LEV 04 GRID 9 UNIT LEV 13 NO STAMPING IS REQUIRED.
5300	183B 184B 185B 186B	1	JR281B	810A	X-DIM	SM/ / LTP// LU3/ / OR SMC1	/ /- 099 / /- 107 / /- 099 / /- 107	000 013 032 045 PER EQL	L	SEE TBL BC	SD5D180-01		LNI//	//- // SEE RMKS		L/R		SD5D097-01			3	90	FORM PER ED5D503-35 G282A GRID 0 UNIT LEV 04 GRID 1 UNIT LEV 13 SEE J5D009B-1 NOTE 12 FOR ASGNT NO STAMPING IS REQUIRED.
5310	183B 184B 185B 186B	1	JR282B	810A	X-DIM	SM/ / LTP// LU3/ / OR SMC1	/ /- 115 / /- 123 / /- 115 / /- 123	000 013 032 045 PER EQL	L	SEE TBL BC	SD5D180-01		LNI//	//- // SEE RMKS		L/R		SD5D097-01			3	90	FORM PER ED5D503-35 G282A GRID 2 UNIT LEV 04 GRID 3 UNIT LEV 13 SEE J5D009B-1 NOTE 12 FOR ASGNT NO STAMPING IS REQUIRED.
5320	184B 185B 186B	1	JR283B	810A	X-DIM	SM/ / LTP// LU3/ / OR SMC1	/ /- 131 / /- 139 / /- 131 / /- 139	000 013 032 045 PER EQL	R	SEE TBL BC	SD5D180-01		LNI//	//- // SEE RMKS		L/R		SD5D097-01			3	90	FORM PER ED5D503-35 G283A GRID 4 UNIT LEV 04 GRID 5 UNIT LEV 13 SEE J5D009B-1 NOTE 12 FOR ASGNT NO STAMPING IS REQUIRED.
5330	185B 186B	1	JR284B	810A	X-DIM	SM/ / LTP// LU3/ / OR SMC1	/ /- 147 / /- 155 / /- 147 / /- 155	000 013 032 045 PER EQL	R	SEE TBL BC	SD5D180-01		LNI//	//- // SEE RMKS		L/R		SD5D097-01			3	90	FORM PER ED5D503-35 G283A GRID 6 UNIT LEV 04 GRID 7 UNIT LEV 13 SEE J5D009B-1 NOTE 12 FOR ASGNT NO STAMPING IS REQUIRED.
5340	186B	1	JR285B	810A	X-DIM	SM/ / LTP// LU3/ / OR SMC1	/ /- 163 / /- 171 / /- 163 / /- 171	000 013 032 045 PER EQL	R	SEE TBL BC	SD5D180-01		LNI//	//- // SEE RMKS		L/R		SD5D097-01			3	90	FORM PER ED5D503-35 G283A GRID 8 UNIT LEV 04 GRID 9 UNIT LEV 13 SEE J5D009B-1 NOTE 12 FOR ASGNT NO STAMPING IS REQUIRED.
5350	183D 184D 185D 186D	1	JR281D	810A	X-DIM	SM/ / LTP// LU3/ / OR SMC1	/ /- 099 / /- 107 / /- 099 / /- 107	000 013 032 045 PER EQL	L	SEE TBL BC	SD5D180-01		DF		TRW CONN TELZ						3	90	FORM PER ED5D503-30 G282D GRID 0 UNIT LEV 04 GRID 1 UNIT LEV 13 NO STAMPING IS REQUIRED.

COPYRIGHT @ 2001 LUCENT TECHNOLOGIES
ALL RIGHTS RESERVED

BT13

INTERCABINET CABLING
FOR
5ESS * SWITCH
*LUCENT TRADEMARK

DWG SIZE C2 | ISSUE 117

PRINTED IN U.S.A.

CONNECTORIZED CABLING

ITEM	LIST OR GROUP	NBR RECD	CABLE IDENT	CABLE CODE	B DIM	FROM							TO							ROUTE	SHLD	NOTE	REMARKS
						FRAME OR UNIT	EQL	TERM	POS	DROP LGTH	WIRING DIAGRAM	FIGURE	FRAME OR UNIT	EQL	TERM	POS	DROP LGTH	WIRING DIAGRAM	FIGURE				
5360	183D 184D 185D 186D	1	JR282D	810A	X-DIM	SM/ / LTP// LU3/ / OR SMC1	/ /- 115 / /- 123 / /- 115 / /- 123	000 013 032 045 PER EQL	L	SEE TBL BC	SD5D180-01		DF		TRW CONN TELZ						3	90	FORM PER ED5D503-30 G282D GRID 2 UNIT LEV 04 GRID 3 UNIT LEV 13 NO STAMPING IS REQUIRED.
5370	184D 185D 186D	1	JR283D	810A	X-DIM	SM/ / LTP// LU3/ / OR SMC1	/ /- 131 / /- 139 / /- 131 / /- 139	000 013 032 045 PER EQL	R	SEE TBL BC	SD5D180-01		DF		TRW CONN TELZ						3	90	FORM PER ED5D503-30 G283D GRID 4 UNIT LEV 04 GRID 5 UNIT LEV 13 NO STAMPING IS REQUIRED.
5380	185D 186D	1	JR284D	810A	X-DIM	SM/ / LTP// LU3/ / OR SMC1	/ /- 147 / /- 155 / /- 147 / /- 155	000 013 032 045 PER EQL	R	SEE TBL BC	SD5D180-01		DF		TRW CONN TELZ						3	90	FORM PER ED5D503-30 G283D GRID 6 UNIT LEV 04 GRID 7 UNIT LEV 13 NO STAMPING IS REQUIRED.
5390	186D	1	JR285D	810A	X-DIM	SM/ / LTP// LU3/ / OR SMC1	/ /- 163 / /- 171 / /- 163 / /- 171	000 013 032 045 PER EQL	R	SEE TBL BC	SD5D180-01		DF		TRW CONN TELZ						3	90	FORM PER ED5D503-30 G283D GRID 8 UNIT LEV 04 GRID 9 UNIT LEV 13 NO STAMPING IS REQUIRED.
5400	183E 184E 185E 186E	1	JR281E	810A	X-DIM	SM/ / LTP// LU3/ / OR SMC1	/ /- 099 / /- 107 / /- 099 / /- 107	000 013 032 045 PER EQL	L	SEE TBL BC	SD5D180-01		DF		TRW CONN						3	90	FORM PER ED5D503-30 G282E GRID 0 UNIT LEV 04 GRID 1 UNIT LEV 13 NO STAMPING IS REQUIRED.
5410	183E 184E 185E 186E	1	JR282E	810A	X-DIM	SM/ / LTP// LU3/ / OR SMC1	/ /- 115 / /- 123 / /- 115 / /- 123	000 013 032 045 PER EQL	L	SEE TBL BC	SD5D180-01		DF		TRW CONN						3	90	FORM PER ED5D503-30 G282E GRID 2 UNIT LEV 04 GRID 3 UNIT LEV 13 NO STAMPING IS REQUIRED.
5420	184E 185E 186E	1	JR283E	810A	X-DIM	SM/ / LTP// LU3/ / OR SMC1	/ /- 131 / /- 139 / /- 131 / /- 139	000 013 032 045 PER EQL	R	SEE TBL BC	SD5D180-01		DF		TRW CONN						3	90	FORM PER ED5D503-30 G283E GRID 4 UNIT LEV 04 GRID 5 UNIT LEV 13 NO STAMPING IS REQUIRED.

COPYRIGHT @ 2001 LUCENT TECHNOLOGIES
ALL RIGHTS RESERVED

BT13

INTERCABINET CABLING
FOR
5ESS * SWITCH
*LUCENT TRADEMARK

DWG SIZE C2 | ISSUE 117

PRINTED IN U.S.A.

CONNECTORIZED CABLING

ITEM	LIST OR GROUP	NBR RECD	CABLE IDENT	CABLE CODE	B DIM	FROM							TO							ROUTE	SHLD	NOTE	REMARKS
						FRAME OR UNIT	EQL	TERM	POS	DROP LGTH	WIRING DIAGRAM	FIGURE	FRAME OR UNIT	EQL	TERM	POS	DROP LGTH	WIRING DIAGRAM	FIGURE				
5430	185E 186E	1	JR284E	810A	X-DIM	SM/ / LTP// LU3/ / OR SMC1	/ /- 147 / /- 155 / /- 147 / /- 155	000 013 032 045 PER EQL	R	SEE TBL BC	SD5D180-01		DF		TRW CONN						3	90	FORM PER ED5D503-30 G23E GRID 6 UNIT LEV 04 GRID 7 UNIT LEV 13 NO STAMPING IS REQUIRED.
5440	186E	1	JR285E	810A	X-DIM	SM/ / LTP// LU3/ / OR SMC1	/ /- 163 / /- 171 / /- 163 / /- 171	000 013 032 045 PER EQL	R	SEE TBL BC	SD5D180-01		DF		TRW CONN						3	90	FORM PER ED5D503-30 G23E GRID 8 UNIT LEV 04 GRID 9 UNIT LEV 13 NO STAMPING IS REQUIRED.
5750	189	1	JF10	813A	X-DIM	(#) SMC( ) ASU2	J1- 299A J2- 299A		*	*	SD5D017-01		DF								3		FORM PER ED5D586-30 G 10 (#) INDICATES SM( )OR RISLU( )OR MRSM( )OR VCDX OR ORM/TRM E/W ALM STAT PNL * CONNECT THIS CABLE TO THE MATING CONNECTOR IN THE CABLE RACK ABOVE SMC1/2 NOTE: IF THE TOTAL LENGTH OF CABLES BETWEEN THE ALARM STATUS UNIT AND THE MMSU EXCEEDS 400 FT, CABLE JF1 OR JF10 MUST BE MODIFIED TO DIRECTLY TERMINATE THE SC AND SD POINTS LOCATED IN THE MMSU IN ACCORDANCE WITH THE OFFICE ASSIGNMENTS. SEE ED5D500-15, FIG 9A FOR ASU (ED5D586-10) OR FIG. 9C FOR ASU (ED5D678-10).
5800	190	1	JF1	813A	X-DIM	(#) SMC( ) ALARM STATUS PANEL	J1&J2 215A J3&J4 215A				SD-5D017-01		DF								3		FORM PER ED5D586-30 G 1 (#) INDICATES SM( ) OR RISLU( ) OR MRSM( ) OR ORM/TRM E/W ALM STAT PNL NOTE: IF THE TOTAL LENGTH OF CABLES BETWEEN THE ALARM STATUS UNIT AND THE MMSU EXCEEDS 400 FT, CABLE JF1 OR JF10 MUST BE MODIFIED TO DIRECTLY TERMINATE THE SC AND SD POINTS LOCATED IN THE MMSU IN ACCORDANCE WITH THE OFFICE ASSIGNMENTS. SEE ED5D500-15 FIG.9A FOR ASU (ED5D586-10) OR FIG.9C FOR ASU (ED5D678-10).
5805	191A	1	JF2A	WP93746L1	X-DIM	SM/#/ SMC/ / MFFU PNL OR RISLU//	/168/- /004/	/2RM / /1RM /	R	1-5 /R/ 7-9 /P/			POWER PLANT		ABS & ABS RTN						4		FORM PER ED5D586-30 G 2A *WP93746L1 16GA STD R/R-BK #FIRST SM IN MMRSM OR FIRST ORM/TRM OR RISLU (NO STAMPING REQUIRED)
5810	191	1	JF2	WP93746L1*	X-DIM	SM/#/ SMC/ / F/F PNL	/170/- /020/	/55/ /05/	L	1-5 /R/ 7-9 /P/	SD-5D017-01		POWER PLANT		ABS AND AB RTN						4		FORM PER ED5D586-30 G 2 * WP93746L1 16GA STRD R/R-BK # FIRST SM IN MMRSM OR FIRST ORM/TRM (NO STAMPING REQUIRED)
5820	192	1	JF4	WP93746L1*	X-DIM	SM/#/ SMC/ / F/F PNL	/170/- /020/	/55/ /05/	L	1-5 /R/ 7-9 /P/	SD-5D017-01		AUD ALARM PANEL / /		/TS1 /						4		FORM PER ED5D586-30 G 4 * WP93746L1 16GA STRD R/R-BK # FIRST SM IN MMRSM OR FIRST ORM/TRM (NO STAMPING REQUIRED)
5830	192A	1	JF5	WP93746L1*	X-DIM	AUD ALARM PANEL / /		/TS1 /			SD-5D017-01		POWER PLANT		ABS AND AB RTN						4		FORM PER ED5D586-30 G 5 * WP93746L1 16GA STRD R/R-BK (NO STAMPING REQUIRED)
5835	192B	1	JF4A	WP93746L1	X-DIM	SM/*/ SMC/ / MFFU PNL	/168/- /004/	/2RM / /1RM /	R	1-5 /R/ 7-9 /P/			AUD ALARM PANEL		/TS1 /						4		FORM PER ED5D586-30 G 4A *WP93746L1 16GA STD R/R-BK #FIRST SM IN MMRSM OR FIRST ORM/TRM (NO STAMPING REQUIRED)

COPYRIGHT @ 2001 LUCENT TECHNOLOGIES
ALL RIGHTS RESERVED

BT13

INTERCABINET CABLING
FOR
5ESS * SWITCH
*LUCENT TRADEMARK

DWG SIZE C2 | ISSUE 117

PRINTED IN U.S.A.

CONNECTORIZED CABLING

ITEM	LIST OR GROUP	NBR RECD	CABLE IDENT	CABLE CODE	B DIM	FROM							TO							ROUTE	SHLD	NOTE	REMARKS
						FRAME OR UNIT	EQL	TERM	POS	DROP LGTH	WIRING DIAGRAM	FIGURE	FRAME OR UNIT	EQL	TERM	POS	DROP LGTH	WIRING DIAGRAM	FIGURE				
5840	193	1	JF9	WP93746L1*	X-DIM	SM/ / SMC/ / F/F PNL /PREC/	/170/- /020/	/55/ /05/	L	1-5 /R/ 7-9 /P/	SD-5D017-01		SM / / SMC 1 F/F PNL /SUCC/	/170/- /020/	/55/ /05/	L	1-5	SD-5D017-01			4		FORM PER ED5D586-30 G 9 * WP93746L1 16GA STRD R/R-BK (NO STAMPING REQUIRED)
5843	193A	1	JF9A	WP93746L1*	X-DIM	SM/ / SMC/ / MFFU PNL /PREC/	/168/- /004/	/2RM / /1RM /	R	1-5 /R/ 7-9 /P/			SM/ / SMC 1 MFFU PNL /SUCC/	/168/- /004/	/2LM / /1LM /	L	1-5				4		FORM PER ED5D586-30 G 9A *WP93746L1 16GA STD R/R-BK (NO STAMPING REQUIRED)
5846	193B	1	JF9B	WP93746L1*	X-DIM	SM/ / SMC/ / F/F PNL /PREC/	/170/- /020/	/55/ /05/	R	1-5 /R/ 7-9 /P/			SM/ / SMC 1 MFFU PNL /SUCC/	/168/- /004/	/2LM / /1LM /	L	1-5				4	157	FORM PER ED5D586-30 G 9B *WP93746L1 16GA STD R/R-BK (NO STAMPING REQUIRED)
5850	194	1	JF6	WP93746L1*	X-DIM	M// F/F PNL			L/R	1-8 /R/ 8-0 /P/	SD-5D017-01		AUD ALARM PANEL OR AUD/VIS ALARM UNIT		/TS1 /						4		FORM PER ED5D586-30 G 6 *WP93746L1 16GA STRD R/R-BK (ALM B FUSE IS JOB ENGINEERED)(ALWAYS REQUIRED, WHEN AUD PNL IS PROVIDED). (NO STAMPING REQUIRED)
5860	194A	1	JF3	276A	X-DIM	AUD ALARM PANEL / / OR AUD/VIS ALARM UNIT		/TS1 /			SD-5D017-01		DF								3		FORM PER ED5D586-30 G 3 (NO STAMPING REQUIRED)
5865	194B	1	JF6A	WP93746L1*	X-DIM	M// F/F PNL			L/R	2-6 /R/ 8-0 /P/	SD-5D017-01		AUD ALARM PANEL OR AUD/VIS ALARM UNIT		/TS1 /						4		FORM PER ED5D586-30 G 6A *WP93746L1 16GA STRD R/R-BK (ALM B FUSE IS JOB ENGINEERED)(ALWAYS REQUIRED, WHEN AUD PNL IS PROVIDED). (NO STAMPING REQUIRED)
5870	195	1	JF8	812A	X-DIM	REM AUD ALM PANEL / / OR AUD/VIS ALARM UNIT	TS1				SD-5D017-01		EXIT PILOT LAMP / /	TSA				SD-5D017-01			3		FORM PER ED5D586-30 G 8 (NO STAMPING REQUIRED)
5880	196	1	JF7	WP93746L1*	X-DIM	M/ / F/F PNL			L/R	1-8 /R/ 8-0 /P/	SD-5D017-01		AUD ALARM PANEL / /		/TS1 /			SD-5D017-01			4		FORM PER ED5D586-30 G 7 * WP93746L1 16GA STRD R/R-BK (FUSE IS JOB ENGINEERED) (NO STAMPING REQUIRED)
5885	196A	1	JF7A	WP93746L1*	X-DIM	M/ / F/F PNL			L/R	2-6 /R/ 8-0 /P/	SD-5D017-01		AUD ALARM PANEL / / OR AUD/VIS ALARM UNIT		/TS1 /			SD-5D017-01			4		FORM PER ED5D586-30 G 7A * WP93746L1 16GA STRD R/R-BK (FUSE IS JOB ENGINEERED) (NO STAMPING REQUIRED)

COPYRIGHT @ 2001 LUCENT TECHNOLOGIES
ALL RIGHTS RESERVED

BT13

INTERCABINET CABLING
FOR
5ESS * SWITCH
*LUCENT TRADEMARK

DWG SIZE C2 | ISSUE 117

LUCENT TECHNOLOGIES INC | ED5D500-21 | SHEET A129 OF 292

PRINTED IN U.S.A.

CONNECTORIZED CABLING

ITEM	LIST OR GROUP	NBR RECD	CABLE IDENT	CABLE CODE	B DIM	FROM							TO							ROUTE	SHLD	NOTE	REMARKS
						FRAME OR UNIT	EQL	TERM	POS	DROP LGTH	WIRING DIAGRAM	FIGURE	FRAME OR UNIT	EQL	TERM	POS	DROP LGTH	WIRING DIAGRAM	FIGURE				
5890	198	1	JV198	812A	X-DIM	PCFD( ) OR GPDF( )	068-030	100	L	1-0 /R/ 7-8 /P/	SD-5D130-01		DF								3		
5892	198A	1	JV198A	812A	X-DIM	PCFD( ) OR GPDF( )	068-030	100	L	1-0 /R/ 7-8 /P/	SD5D130-01		DF							3 3 3 3			
5895	200	1	JV200	812A	X-DIM	M/ / F/F PANEL	068-044 068-138	510 510	L	2-8 /R/ 8-10 /P/	SD-5D130-01		DF								3		
5900	200A	1	JV200A	TIW 2/24	X-DIM	M/ / F/F PANEL	068-102	100	L	3-6 /R/ 8-0 /P/	SD-5D130-01		DF								3		
6000	210	1	JV207	812A	X-DIM	M/ /	068-044	510	L	2-8 /R/	SD5D130-01		DF								3		
6010	201 202 203	1	JR201	810A	X-DIM	SM/ / LTP/ / LU2/ /	/ /- 111 / /- 119 / /- 127 / /- 135	000 013 032 045 PER EQL	L	SEE TBL BP1	SD-5D052-01 OR SD-5X205-01		DF		CONN 711 89M BK						3	88 90	FORM PER ED5D503-32 G 201 UNIT LEV 04 GRID 0 & 1 NO STAMPING REQUIRED. 89M TYPE DF BLK ONLY.
6020	201 202 203	1	JR202	810A	X-DIM	SM/ / LTP/ / LU2/ /	/ /- 143 / /- 151 / /- 159 / /- 167	000 013 032 045 PER EQL	R	SEE TBL BP1	SD-5D052-01 OR SD-5X205-01		DF		CONN 711 89M BK						3	88 90	FORM PER ED5D503-32 G 202 UNIT LEV 04 GRID 2 & 3 NO STAMPING REQUIRED. 89M TYPE DF BLK ONLY.
6030	202 203	1	JR203	810A	X-DIM	SM/ / LTP/ / LU2/ /	/ /- 111 / /- 119 / /- 127 / /- 135	000 013 032 045 PER EQL	L	SEE TBL BP1	SD-5D052-01 OR SD-5X205-01		DF		CONN 711 89M BK						3	88 90	FORM PER ED5D503-32 G 203 UNIT LEV 13 GRID 4 & 5 NO STAMPING REQUIRED. 89M TYPE DF BLK ONLY.
6040	203	1	JR204	810A	X-DIM	SM/ / LTP/ / LU2/ /	/ /- 143 / /- 151 / /- 159 / /- 167	000 013 032 045 PER EQL	R	SEE TBL BP1	SD-5D052-01 OR SD-5X205-01		DF		CONN 711 89M BK						3	88 90	FORM PER ED5D503-32 G 204 UNIT LEV 13 GRID 6 & 7 NO STAMPING REQUIRED. 89M TYPE DF BLK ONLY.
6050	201B 202B 203B	1	JR201B	810A	X-DIM	SM// LTP// LU2//	/ /- 111 / /- 119 / /- 127 / /- 135	000 013 032 045 PER EQL	L	SEE TBL BP1	SD-5D052-01		DF		TRW CONN 89M BLK						3	90	FORM PER ED5D503-32 G201B UNIT LEV 04 GRID 0 & 1 NO STAMPING REQUIRED. 89M DF BLK ONLY.

COPYRIGHT @ 2001 LUCENT TECHNOLOGIES
ALL RIGHTS RESERVED

BT13

INTERCABINET CABLING
FOR
5ESS * SWITCH
*LUCENT TRADEMARK

DWG SIZE C2 | ISSUE 117

PRINTED IN U.S.A.

CONNECTORIZED CABLING

ITEM	LIST OR GROUP	NBR RECD	CABLE IDENT	CABLE CODE	B DIM	FROM							TO							ROUTE	SHLD	NOTE	REMARKS
						FRAME OR UNIT	EQL	TERM	POS	DROP LGTH	WIRING DIAGRAM	FIGURE	FRAME OR UNIT	EQL	TERM	POS	DROP LGTH	WIRING DIAGRAM	FIGURE				
6060	201B 202B 203B	1	JR202B	810A	X-DIM	SM// LTP// LU2//	/ /- 143 / /- 151 / /- 159 / /- 167	000 013 032 045 PER EQL	R	SEE TBL BP1	SD-5D052-01		DF		TRW CONN 89M BLK						3	90	FORM PER ED5D503-32 G202B UNIT LEV 04 GRID 2 & 3 NO STAMPING REQUIRED. 89M DF BLK ONLY.
6070	202B 203B	1	JR203B	810A	X-DIM	SM// LTP// LU2//	/ /- 111 / /- 119 / /- 127 / /- 135	000 013 032 045 PER EQL	L	SEE TBL BP1	SD-5D052-01		DF		TRW CONN 89M BLK						3	90	FORM PER ED5D503-32 G203B UNIT LEV 13 GRID 4 & 5 NO STAMPING REQUIRED. 89M DF BLK ONLY.
6080	203B	1	JR204B	810A	X-DIM	SM// LTP// LU2//	/ /- 143 / /- 151 / /- 159 / /- 167	000 013 032 045 PER EQL	R	SEE TBL BP1	SD-5D052-01		DF		TRW CONN 89M BLK						3	90	FORM PER ED5D503-32 G204B UNIT LEV 13 GRID 6 & 7 NO STAMPING REQUIRED. 89M DF BLK ONLY.
6190	204 205 206 207	1	JR291	810A	X-DIM	SM / / LTP/ / LU3/ / OR SMC1	/ /- 099 / /- 107 / /- 099 / /- 107	000 013 032 045 PER EQL	L	SEE TBL BC1	SD5D180-01		DF		711 CONN 89M BK						3	88 90	FORM PER ED5D503-32 G 292 GRID 0 UNIT LEV 04 GRID 1 UNIT LEV 13 NO STAMPING REQUIRED. 89M TYPE DF BLK ONLY.
6200	204 205 206 207	1	JR292	810A	X-DIM	SM/ / LTP/ / LU3/ / OR SMC1	/ /- 115 / /- 123 / /- 115 / /- 123	000 013 032 045 PER EQL	L	SEE TBL BC1	SD5D180-01		DF		711 CONN 89M BK						3	88 90	FORM PER ED5D503-32 G 292 GRID 2 UNIT LEV 04 GRID 3 UNIT LEV 13 NO STAMPING IS REQUIRED. 89M TYPE DF BLK ONLY.
6210	205 206 207	1	JR293	810A	X-DIM	SM/ / LTP// LU3/ / OR SMC1	/ /- 131 / /- 139 / /- 131 / /- 139	000 013 032 045 PER EQL	R	SEE TBL BC1	SD5D180-01		DF		711 CONN 89M BK						3	88 90	FORM PER ED5D503-32 G 293 GRID 4 UNIT LEV 04 GRID 5 UNIT LEV 13 NO STAMPING REQUIRED. 89M TYPE DF BLK ONLY.
6220	206 207	1	JR294	810A	X-DIM	SM/ / LTP// LU3/ / OR SMC1	/ /- 147 / /- 155 / /- 147 / /- 155	000 013 032 045 PER EQL	R	SEE TBL BC1	SD5D180-01		DF		711 CONN 89M BK						3	88 90	FORM PER ED5D503-32 G 293 GRID 6 UNIT LEV 04 GRID 7 UNIT LEV 13 NO STAMPING REQUIRED. 89M TYPE DF BLK ONLY.

COPYRIGHT @ 2001 LUCENT TECHNOLOGIES
ALL RIGHTS RESERVED

BT13

INTERCABINET CABLING
FOR
5ESS * SWITCH
*LUCENT TRADEMARK

DWG SIZE C2 | ISSUE 117

PRINTED IN U.S.A.

CONNECTORIZED CABLING

ITEM	LIST OR GROUP	NBR RECD	CABLE IDENT	CABLE CODE	B DIM	FROM							TO							ROUTE	SHLD	NOTE	REMARKS
						FRAME OR UNIT	EQL	TERM	POS	DROP LGTH	WIRING DIAGRAM	FIGURE	FRAME OR UNIT	EQL	TERM	POS	DROP LGTH	WIRING DIAGRAM	FIGURE				
6230	207	1	JR295	810A	X-DIM	SM/ / LTP// LU3/ / OR SMC1	/ /- 163 / /- 171 / /- 163 / /- 171	000 013 032 045 PER EQL	R	SEE TBL BC1	SD5D180-01		DF		711 CONN 89M BK						3	88 90	FORM PER ED5D503-32 G 293 GRID 8 UNIT LEV 04 GRID 9 UNIT LEV 13 NO STAMPING IS REQUIRED. 89M TYPE OF BLK ONLY.
6240	204B 205B 206B 207B	1	JR291B	810A	X-DIM	SM/ / LTP// LU3/ / OR SMC1	/ /- 099 / /- 107 / /- 099 / /- 107	000 013 032 045 PER EQL	L	SEE TBL BC1	SD5D180-01		DF		TRW CONN 89M BLK						3	90	FORM PER ED5D503-32 G292B GRID 0 UNIT LEV 04 GRID 1 UNIT LEV 13 NO STAMPING REQURIED. 89M DF BLK ONLY.
6250	204B 205B 206B 207B	1	JR292B	810A	X-DIM	SM/ / LTP// LU3/ / OR SMC1	/ /- 115 / /- 123 / /- 115 / /- 123	000 013 032 045 PER EQL	L	SEE TBL BC1	SD5D180-01		DF		TRW CONN 89M BLK						3	90	FORM PER ED5D503-32 G292B GRID 2 UNIT LEV 04 GRID 3 UNIT LEV 13 NO STAMPING IS REQUIRED. 89M DF BLK ONLY.
6260	205B 206B 207B	1	JR293B	810A	X-DIM	SM/ / LTP// LU3/ / OR SMC1	/ /- 131 / /- 139 / /- 131 / /- 139	000 013 032 045 PER EQL	R	SEE TBL BC1	SD5D180-01		DF		TRW CONN 89M BLK						3	90	FORM PER ED5D503-32 G293B GRID 4 UNIT LEV 04 GRID 5 UNIT LEV 13 NO STAMPING REQUIRED. 89M DF BLK ONLY.
6270	206B 207B	1	JR294B	810A	X-DIM	SM/ / LTP// LU3/ / OR SMC1	/ /- 147 / /- 155 / /- 147 / /- 155	000 013 032 045 PER EQL	R	SEE TBL BC1	SD5D180-01		DF		TRW CONN 89M BLK						3	90	FORM PER ED5D503-32 G293B GRID 6 UNIT LEV 04 GRID 7 UNIT LEV 13 NO STAMPING REQURIED. 89M DF BLK ONLY.
6280	207B	1	JR295B	810A	X-DIM	SM/ / LTP// LU3/ / OR SMC1	/ /- 163 / /- 171 / /- 163 / /- 171	000 013 032 045 PER EQL	R	SEE TBL BC1	SD5D180-01		DF		TRW CONN 89M BLK						3	90	FORM PER ED5D503-32 G293B GRID 8 UNIT LEV 04 GRID 9 UNIT LEV 13 NO STAMPING REQURIED. 89M DF BLK ONLY.
6300	211A 212A 213A	1	JR121A	809A	X-DIM	SM// LTP// LU2//	/ /- 111 / /- 119	000 013 032 045 PER EQL	L	SEE TBL BP	SD5D052-01		DF		SWC						3	90	FORM PER ED5D503-32 G121A UNIT LEVEL 04 GRID 0.
6305	211A 212A 213A	1	JR122A	809A	X-DIM	SM// LTP// LU2//	/ /- 127 / /- 135	000 013 032 045 PER EQL	L	SEE TBL BP	SD5D052-01		DF		SWC						3	90	FORM PER ED5D503-32 G122A UNIT LEVEL 04 GRID 1.

COPYRIGHT @ 2001 LUCENT TECHNOLOGIES
ALL RIGHTS RESERVED

BT13

INTERCABINET CABLING
FOR
5ESS * SWITCH
*LUCENT TRADEMARK

DWG SIZE C2 | ISSUE 117

PRINTED IN U.S.A.

CONNECTORIZED CABLING

ITEM	LIST OR GROUP	NBR RECD	CABLE IDENT	CABLE CODE	B DIM	FROM							TO							ROUTE	SHLD	NOTE	REMARKS
						FRAME OR UNIT	EQL	TERM	POS	DROP LGTH	WIRING DIAGRAM	FIGURE	FRAME OR UNIT	EQL	TERM	POS	DROP LGTH	WIRING DIAGRAM	FIGURE				
6310	211A 212A 213A	1	JR123A	809A	X-DIM	SM// LTP// LU2//	/ /- 143 / /- 151	000 013 032 045 PER EQL	R	SEE TBL BP	SD5D052-01		DF		SWC						3	90	FORM PER ED5D503-32 G123A UNIT LEVEL 04 GRID 2.
6315	211A 212A 213A	1	JR124A	809A	X-DIM	SM// LTP// LU2//	/ /- 159 / /- 167	000 013 032 045 PER EQL	R	SEE TBL BP	SD5D052-01		DF		SWC						3	90	FORM PER ED5D503-32 G124A UNIT LEVEL 04 GRID 3.
6320	212A 213A	1	JR125A	809A	X-DIM	SM// LTP// LU2//	/ /- 111 / /- 119	000 013 032 045 PER EQL	L	SEE TBL BP	SD5D052-01		DF		SWC						3	90	FORM PER ED5D503-32 G125A UNIT LEVEL 13 GRID 4.
6325	212A 213A	1	JR126A	809A	X-DIM	SM// LTP// LU2//	/ /- 127 / /- 135	000 013 032 045 PER EQL	L	SEE TBL BP	SD5D052-01		DF		SWC						3	90	FORM PER ED5D503-32 G126A UNIT LEVEL 13 GRID 5.
6330	213A	1	JR127A	809A	X-DIM	SM// LTP// LU2//	/ /- 143 / /- 151	000 013 032 045 PER EQL	R	SEE TBL BP	SD5D052-01		DF		SWC						3	90	FORM PER ED5D503-32 G127A UNIT LEVEL 13 GRID 6.
6335	213A	1	JR128A	809A	X-DIM	SM// LTP// LU2//	/ /- 159 / /- 167	000 013 032 045 PER EQL	R	SEE TBL BP	SD5D052-01		DF		SWC						3	90	FORM PER ED5D503-32 G128A UNIT LEVEL 13 GRID 7.
6340	211B 212B 213B	1	JR121B	809A	X-DIM	SM// LTPL// LU2//	/ /- 111 / /- 119	000 013 032 045 PER EQL	L	SEE TBL BP	SD5D052-01		DF		TRW CONN 89M BKS						3	90	FORM PER ED5D503-32 G121B UNIT LEVEL 04 GRID 0 89M DF BKS ONLY.
6345	211B 212B 213B	1	JR122B	809A	X-DIM	SM// LTP// LU2//	/ /- 127 / /- 135	000 013 032 045 PER EQL	L	SEE TBL BP	SD5D052-01		DF		TRW CONN 89M BKS						3	90	FORM PER ED5D503-32 G122B UNIT LEVEL 04 GRID 1 89M DF BKS ONLY.
6350	211B 212B 213B	1	JR123B	809A	X-DIM	SM// LTP// LU2//	/ /- 143 / /- 151	000 013 032 045 PER EQL	R	SEE TBL BP	SD5D052-01		DF		TRW CONN 89M BKS						3	90	FORM PER ED5D503-32 G123B UNIT LEVEL 04 GRID 2 89M DF BKS ONLY.

COPYRIGHT @ 2001 LUCENT TECHNOLOGIES
ALL RIGHTS RESERVED

BT13

INTERCABINET CABLING
FOR
5ESS * SWITCH
*LUCENT TRADEMARK

DWG SIZE C2 | ISSUE 117

LUCENT TECHNOLOGIES INC | ED5D500-21 | SHEET A133 OF 292

PRINTED IN U.S.A.

CONNECTORIZED CABLING

ITEM	LIST OR GROUP	NBR RECD	CABLE IDENT	CABLE CODE	B DIM	FROM							TO							ROUTE	SHLD	NOTE	REMARKS
						FRAME OR UNIT	EQL	TERM	POS	DROP LGTH	WIRING DIAGRAM	FIGURE	FRAME OR UNIT	EQL	TERM	POS	DROP LGTH	WIRING DIAGRAM	FIGURE				
6355	211B 212B 213B	1	JR124B	809A	X-DIM	SM// LTP// LU2//	/ /- 159 / /- 167	000 013 032 045 PER	R	SEE TBL BP	SD5D052-01		DF		TRW CONN 89M BKS						3	90	FORM PER ED5D503-32 G124B UNIT LEVEL 04 GRID 3 89M DF BKS ONLY.
6360	212B 213B	1	JR125B	809A	X-DIM	SM// LTP// LU2//	/ /- 111 / /- 119	000 013 032 045 PER EQL	L	SEE TBL BP	SD5D052-01		DF		TRW CONN 89M BKS						3	90	FORM PER ED5D503-32 G125B UNIT LEVEL 13 GRID 4 89M DF BKS ONLY.
6365	212B 213B	1	JR126B	809A	X-DIM	SM// LTP// LU2//	/ /- 127 / /- 135	000 013 032 045 PER EQL	L	SEE TBL BP	SD5D052-01		DF		TRW CONN 89M BKS						3	90	FORM PER ED5D503-32 G126B UNIT LEVEL 13 GRID 5 89M DF BKS ONLY.
6370	213B	1	JR127B	809A	X-DIM	SM// LTP// LU2//	/ /- 143 / /- 151	000 013 032 045 PER EQL	R	SEE TBL BP	SD5D052-01		DF		TRW CONN 89M BKS						3	90	FORM PER ED5D503-32 G127B UNIT LEVEL 13 GRID 6 89M DF BKS ONLY.
6375	213B	1	JR128B	809A	X-DIM	SM// LTP// LU2//	/ /- 159 / /- 167	000 013 032 045 PER EQL	R	SEE TBL BP	SD5D052-01		DF		TRW CONN 89M BKS						3	90	FORM PER ED5D503-32 G128B UNIT LEVEL 13 GRID 7 89M DF BKS ONLY.
6380	214A 215A 216A 217A	1	JR131A	809A	X-DIM	SM// LTP// LU3 OR SMC1	/ /- 099 / /- 107	000 013 032 045 PER EQL	L	SEE TBL BC2	SD5D180-01		DF		SWC						3	90	FORM PER ED5D503-32 G133A UNIT LEVEL 04 GRID 0.
6385	214A 215A 216A 217A	1	JR132A	809A	X-DIM	SM// LTP// LU3 OR SMC1	/ /- 099 / /- 107	000 013 032 045 PER EQL	L	SEE TBL BC2	SD5D180-01		DF		SWC						3	90	FORM PER ED5D503-32 G133A UNIT LEVEL 13 GRID 1.
6390	214A 215A 216A 217A	1	JR133A	809A	X-DIM	SM// LTP// LU3 OR SMC1	/ /- 115 / /- 123	000 013 032 045 PER EQL	L	SEE TBL BC2	SD5D180-01		DF		SWC						3	90	FORM PER ED5D503-32 G133A UNIT LEVEL 04 GRID 2.
6395	214A 215A 216A 217A	1	JR134A	809A	X-DIM	SM// LTP// LU3 OR SMC1	/ /- 115 / /- 123	000 013 032 045 PER EQL	L	SEE TBL BC2	SD5D180-01		DF		SWC						3	90	FORM PER ED5D503-32 G133A UNIT LEVEL 13 GRID 3.

COPYRIGHT @ 2001 LUCENT TECHNOLOGIES
ALL RIGHTS RESERVED

BT13

INTERCABINET CABLING
FOR
5ESS * SWITCH
*LUCENT TRADEMARK

DWG SIZE C2 | ISSUE 117

PRINTED IN U.S.A.

CONNECTORIZED CABLING

ITEM	LIST OR GROUP	NBR RECD	CABLE IDENT	CABLE CODE	B DIM	FROM							TO							ROUTE	SHLD	NOTE	REMARKS
						FRAME OR UNIT	EQL	TERM	POS	DROP LGTH	WIRING DIAGRAM	FIGURE	FRAME OR UNIT	EQL	TERM	POS	DROP LGTH	WIRING DIAGRAM	FIGURE				
6400	215A 216A 217A	1	JR135A	809A	X-DIM	SM// LTP// LU3 OR SMC1	/ /- 131 / /- 139	000 013 032 045 PER EQL	R	SEE TBL BC2	SD5D180-01		DF		SWC						3	90	FORM PER ED5D503-32 G135A UNIT LEVEL 04 GRID 4.
6405	215A 216A 217A	1	JR136A	809A	X-DIM	SM// LTP// LU3 OR SMC1	/ /- 131 / /- 139	000 013 032 045 PER EQL	R	SEE TBL BC2	SD5D180-01		DF		SWC						3	90	FORM PER ED5D503-32 G135A UNIT LEVEL 13 GRID 5.
6410	216A 217A	1	JR137A	809A	X-DIM	SM// LTP// LU3 OR SMC1	/ /- 147 / /- 155	000 013 032 045 PER EQL	R	SEE TBL BC2	SD5D180-01		DF		SWC						3	90	FORM PER ED5D503-32 G135A UNIT LEVEL 04 GRID 6.
6415	216A 217A	1	JR138A	809A	X-DIM	SM// LTP// LU3 OR SMC1	/ /- 147 / /- 155	000 013 032 045 PER EQL	R	SEE TBL BC2	SD5D180-01		DF		SWC						3	90	FORM PER ED5D503-32 G135A UNIT LEVEL 13 GRID 7.
6420	217A	1	JR139A	809A	X-DIM	SM// LTP// LU3 OR SMC1	/ /- 163 / /- 171	000 013 032 045 PER EQL	R	SEE TBL BC2	SD5D180-01		DF		SWC						3	90	FORM PER ED5D503-32 G135A UNIT LEVEL 04 GRID 8.
6425	217A	1	JR140A	809A	X-DIM	SM// LTP// LU3 OR SMC1	/ /- 163 / /- 171	000 013 032 045 PER EQL	R	SEE TBL BC2	SD5D180-01		DF		SWC						3	90	FORM PER ED5D503-32 G135A UNIT LEVEL 13 GRID 9.
6430	214B 215B 216B 217B	1	JR131B	809A	X-DIM	SM// LTP// LU3 OR SMC1	/ /- 099 / /- 107	000 013 032 045 PER EQL	L	SEE TBL BC2	SD5D180-01		DF		TRW CONN 89M BLK						3	90	FORM PER ED5D503-32 G133B UNIT LEVEL 04 GRID 0.
6435	214B 215B 216B 217B	1	JR132B	809A	X-DIM	SM// LTP// LU3 OR SMC1	/ /- 099 / /- 107	000 013 032 045 PER EQL	L	SEE TBL BC2	SD5D180-01		DF		TRW CONN 89M BLK						3	90	FORM PER ED5D503-32 G133B UNIT LEVEL 13 GRID 1.
6440	214B 215B 216B 217B	1	JR133B	809A	X-DIM	SM// LTP// LU3 OR SMC1	/ /- 115 / /- 123	000 013 032 045 PER EQL	L	SEE TBL BC2	SD5D180-01		DF		TRW CONN 89M BLK						3	90	FORM PER ED5D503-32 G133B UNIT LEVEL 04 GRID 2.

COPYRIGHT @ 2001 LUCENT TECHNOLOGIES
ALL RIGHTS RESERVED

BT13

INTERCABINET CABLING
FOR
5ESS * SWITCH
*LUCENT TRADEMARK

DWG SIZE C2 | ISSUE 117

LUCENT TECHNOLOGIES INC | ED5D500-21 | SHEET OF A135 292

PRINTED IN U.S.A.

CONNECTORIZED CABLING

ITEM	LIST OR GROUP	NBR RECD	CABLE IDENT	CABLE CODE	B DIM	FROM							TO							ROUTE	SHLD	NOTE	REMARKS
						FRAME OR UNIT	EQL	TERM	POS	DROP LGTH	WIRING DIAGRAM	FIGURE	FRAME OR UNIT	EQL	TERM	POS	DROP LGTH	WIRING DIAGRAM	FIGURE				
6445	214B 215B 216B 217B	1	JR134B	809A	X-DIM	SM// LTP// LU3 OR SMC1	/ /- 115 / /- 123	000 013 032 045 PER EQL	L	SEE TBL BC2	SD5D180-01		DF		TRW CONN 89M BLK						3	90	FORM PER ED5D503-32 G133B UNIT LEVEL 13 GRID 3.
6450	215B 216B 217B	1	JR135B	809A	X-DIM	SM// LTP// LU3 OR SMC1	/ /- 131 / /- 139	000 013 032 045 PER EQL	R	SEE TBL BC2	SD5D180-01		DF		TRW CONN 89M BLK						3	90	FORM PER ED5D503-32 G135B UNIT LEVEL 04 GRID 4.
6455	215B 216B 217B	1	JR136B	809A	X-DIM	SM// LTP// LU3 OR SMC1	/ /- 131 / /- 139	000 013 032 045 PER EQL	R	SEE TBL BC2	SD5D180-01		DF		TRW CONN 89M BLK						3	90	FORM PER ED5D503-32 G135B UNIT LEVEL 13 GRID 5.
6460	216B 217B	1	JR137B	809A	X-DIM	SM// LTP// LU3 OR SMC1	/ /- 147 / /- 155	000 013 032 045 PER EQL	R	SEE TBL BC2	SD5D180-01		DF		TRW CONN 89M BLK						3	90	FORM PER ED5D503-32 G135B UNIT LEVEL 04 GRID 6.
6465	216B 217B	1	JR138B	809A	X-DIM	SM// LTP// LU3 OR SMC1	/ /- 147 / /- 155	000 013 032 045 PER EQL	R	SEE TBL BC2	SD5D180-01		DF		TRW CONN 89M BLK						3	90	FORM PER ED5D503-32 G135B UNIT LEVEL 13 GRID 7.
6470	217B	1	JR139B	809A	X-DIM	SM// LTP// LU3 OR SMC1	/ /- 163 / /- 171	000 013 032 045 PER EQL	R	SEE TBL BC2	SD5D180-01		DF		TRW CONN 89M BLK						3	90	FORM PER ED5D503-32 G135B UNIT LEVEL 04 GRID 8.
6475	217B	1	JR140B	809A	X-DIM	SM// LTP// LU3 OR SMC1	/ /- 163 / /- 171	000 013 032 045 PER EQL	R	SEE TBL BC2	SD5D180-01		DF		TRW CONN 89M BLK						3	90	FORM PER ED5D503-32 G135B UNIT LEVEL 13 GRID 9.
6480	221A 222A 223A	1	JR141A	809A	X-DIM	SM() LTP// LU2	( )- 111 ( )- 119	000 032 PER EQL	L	SEE TBL BP	SD5D052-01		DF		SWC						3		FORM PER ED5D503-32 G141A UNIT LEVEL 04 GRID 0.
6485	221A 222A 223A	1	JR142A	809A	X-DIM	SM() LTP// LU2	( )- 127 ( )- 135	000 032 PER EQL	L	SEE TBL BP	SD5D052-01		DF		SWC						3		FORM PER ED5D503-32 G142A UNIT LEVEL 04 GRID 1.
6490	221A 222A 223A	1	JR143A	809A	X-DIM	SM() LTP// LU2	( )- 143 ( )- 151	000 032 PER EQL	R	SEE TBL BP	SD5D052-01		DF		SWC						3		FORM PER ED5D503-32 G143A UNIT LEVEL 04 GRID 2.

COPYRIGHT @ 2001 LUCENT TECHNOLOGIES
ALL RIGHTS RESERVED

BT13

INTERCABINET CABLING
FOR
5ESS * SWITCH
*LUCENT TRADEMARK

DWG SIZE C2 | ISSUE 117

PRINTED IN U.S.A.

CONNECTORIZED CABLING

ITEM	LIST OR GROUP	NBR RECD	CABLE IDENT	CABLE CODE	B DIM	FROM							TO							ROUTE	SHLD	NOTE	REMARKS
						FRAME OR UNIT	EQL	TERM	POS	DROP LGTH	WIRING DIAGRAM	FIGURE	FRAME OR UNIT	EQL	TERM	POS	DROP LGTH	WIRING DIAGRAM	FIGURE				
6495	221A 222A 223A	1	JR144A	809A	X-DIM	SM() LTP// LU2	( )- 159 ( )- 167	000 032 PER EQL	R	SEE TBL BP	SD5D052-01		DF		SWC						3		FORM PER ED5D503-32 G144A UNIT LEVEL 04 GRID 3.
6500	222A 223A	1	JR145A	809A	X-DIM	SM() LTP// LU2	( )- 111 ( )- 119	000 032 PER EQL	L	SEE TBL BP	SD5D052-01		DF		SWC						3		FORM PER ED5D503-32 G145A UNIT LEVEL 13 GRID 4.
6505	222A 223A	1	JR146A	809A	X-DIM	SM() LTP// LU2	( )- 127 ( )- 135	000 032 PER EQL	L	SEE TBL BP	SD5D052-01		DF		SWC						3		FORM PER ED5D503-32 G146A UNIT LEVEL 13 GRID 5.
6510	223A	1	JR147A	809A	X-DIM	SM() LTP// LU2	( )- 143 ( )- 151	000 032 PER EQL	R	SEE TBL BP	SD5D052-01		DF		SWC						3		FORM PER ED5D503-32 G147A UNIT LEVEL 13 GRID 6.
6515	223A	1	JR148A	809A	X-DIM	SM() LTP// LU2	( )- 159 ( )- 167	000 032 PER EQL	R	SEE TBL BP	SD5D052-01		DF		SWC						3		FORM PER ED5D503-32 G148A UNIT LEVEL 13 GRID 7.
7000	345X	1	JR345X	609C	3-00	SM() LTP// OR SMC // DLTU2 //	( )- 099	132 145 332 345	L		SD5D205-01		DSX-1 /CONN IN UPRGHT/	J1-0 J1-1	RECP							154	FORM PER ED5D503-32 G345X (IN CABLE) J1-0 CONN IS DLTU2 DFI 1-5 J1-1 CONN IS DLTU2 DFI 6-10
7010	345X	1	JR346X	609C	3-00	SM() LTP// OR SMC // DLTU2 //	( )- 099	100 113 300 313	R		SD5D205-01		DSX-1 /CONN IN UPRGHT/	J2-0 J2-1	RECP							154	FORM PER ED5D503-32 G346X (OUT CABLE) J2-0 CONN IS DLTU2 DFI 1-5 J2-1 CONN IS DLTU2 DFI 6-10
7020	346X	1	JR347X	1249020C	3-00	SM() LTP// OR SMC // DLTU2 //	( )- 099	132 145 332 345	L		SD5D205-01		DSX-1 /CONN IN UPRGHT/	J1-0 J1-1	RECP							154	FORM PER ED5D503-32 G347X (IN CABLE) J1-0 CONN IS DLTU2 DFI 1-5 J1-1 CONN IS DLTU2 DFI 6-10
7030	346X	1	JR348X	1249020C	3-00	SM() LTP// OR SMC // DLTU2 //	( )- 099	100 113 300 313	R		SD5D205-01		DSX-1 /CONN IN UPRGHT/	J2-0 J2-1	RECP							154	FORM PER ED5D503-32 G348X (OUT CABLE) J2-0 CONN IS DLTU2 DFI 1-5 J2-1 CONN IS DLTU2 DFI 6-10
7040	330X	1	JR341X	(2)607C	2-11	SM() LTP// OR SMC // DLTU1 //	(*)- 006 P1-0 (**)- 006 P1-1		L		SD5D201-01		DSX-1 /CONN IN UPRGHT/		711 CONN							154	FORM PER ED5D503-32 G341X (IN CABLE) * P1-0 CONN IS DESIGN FOR LOWER DLTU1 IN A CABINET ** P1-1 CONN IS DESIGN FOR UPPER DLTU1 IN A CABINET
7050	330X	1	JR342X	(2)607C	2-11	SM() LTP// OR SMC // DLTU1 //	(*)- 006 P2-0 (**)- 006 P2-1		L		SD5D201-01		DSX-1 /CONN IN UPRGHT/		711 CONN							154	FORM PER ED5D503-32 G342X (OUT CABLE) * P2-0 CONN IS DESIGN FOR LOWER DLTU1 IN A CABINET ** P2-1 CONN IS DESIGN FOR UPPER DLTU1 IN A CABINET

COPYRIGHT @ 2001 LUCENT TECHNOLOGIES
ALL RIGHTS RESERVED

BT13

INTERCABINET CABLING
FOR
5ESS * SWITCH
*LUCENT TRADEMARK

DWG SIZE C2 | ISSUE 117

LUCENT TECHNOLOGIES INC | ED5D500-21 | SHEET A137 OF 292

PRINTED IN U.S.A.

CONNECTORIZED CABLING

ITEM	LIST OR GROUP	NBR RECD	CABLE IDENT	CABLE CODE	B DIM	FROM							TO							ROUTE	SHLD	NOTE	REMARKS
						FRAME OR UNIT	EQL	TERM	POS	DROP LGTH	WIRING DIAGRAM	FIGURE	FRAME OR UNIT	EQL	TERM	POS	DROP LGTH	WIRING DIAGRAM	FIGURE				
7060	331X	1	JR343X	(2)1249012A	2-11	SM() LTP// OR SMC // DLTU1 //	(*)- 006 P1-0 (**)- 006 P1-1		L		SD5D201-01		DSX-1 /CONN IN UPRGHT/		711 CONN							154	FORM PER ED5D503-32 G343X (IN CABLE) * P1-0 CONN IS DESIGN FOR LOWER DLTU1 IN A CABINET ** P1-1 CONN IS DESIGN FOR UPPER DLTU1 IN A CABINET
7070	331X	1	JR344X	(2)1249012A	2-11	SM() LTP// OR SMC // DLTU1 //	(*)- 006 P2-0 (**)- 006 P2-1		L		SD5D201-01		DSX-1 /CONN IN UPRGHT/		711 CONN							154	FORM PER ED5D503-32 G344X (OUT CABLE) * P2-0 CONN IS DESIGN FOR LOWER DLTU1 IN A CABINET ** P2-1 CONN IS DESIGN FOR UPPER DLTU1 IN A CABINET
8000	900	1	JR900	810A	X-DIM	SM/ / LTP/ / LU3 OR SMC1	/ /- 099 / /- 107 / /- 115 / /- 123	100 113 132 145 PER EQL	L	SEE TBL BC3	SD5D180-01		DF		SWC						3		FORM PER ED5D503-32 G 900 UNIT LEV 04 & 13 GRID 0,1,2 & 3 (EVEN SWITCHES) CONC RATIO 4:1 128 PAIR CABLE (32 CONNECTORS)
8010	900	1	JR901	810A	X-DIM	SM/ / LTP/ / LU3 OR SMC1	/ /- 099 / /- 107 / /- 115 / /- 123	106 119 138 151 PER EQL	L	SEE TBL BC3	SD5D180-01		DF		SWC						3		FORM PER ED5D503-32 G 901 UNIT LEV 04 & 13 GRID 0,1,2 & 3 (ODD SWITCHES) CONC RATIO 4:1 128 PAIR CABLE (32 CONNECTORS)
8020	901	1	JR902	809A	X-DIM	SM/ / LTP/ / LU3 OR SMC1	/ /- 131 / /- 139	100 113 132 145 PER EQL	R	SEE TBL BC3	SD5D180-01		DF		SWC						3		FORM PER ED5D503-32 G 902 UNIT LEV 04 & 13 GRID 4 & 5 (EVEN SWITCHES) CONC RATIO 6:1 64 PAIR CABLE (16 CONNECTORS)
8030	901	1	JR903	809A	X-DIM	SM/ / LTP/ / LU3 OR SMC1	/ /- 131 / /- 139	106 119 138 151 PER EQL	R	SEE TBL BC3	SD5D180-01		DF		SWC						3		FORM PER ED5D503-32 G 903 UNIT LEV 04 & 13 GRID 4 & 5 (ODD SWITCHES) CONC RATIO 6:1 64 PAIR CABLE (16 CONNECTORS)
8040	350	1	JR121	1249004C	X-DIM	SM( ) LTP/ / DLTU2 OR SMC1	()-112	101	L		SD5D205-01		DIGITAL CLOCK SUPPLY									159	
8045	350	1	JR122	1249004C	X-DIM	SM( ) LTP/ / DLTU2 OR SMC1	()-176	101	R		SD5D205-01		DIGITAL CLOCK SUPPLY									159	
8050	352	1	JR125	606C	X-DIM	SM( ) LTP/ / DLTU2 OR SMC1	()-112	301	L		SD5D201-01		CMCU	528-58 628-58	( ) ( )							159	
8055	352	1	JR126	606C	X-DIM	SM( ) LTP/ / DLTU2 OR SMC1	()-176	301	R		SD5D201-01		CMCU	528-58 628-58	( ) ( )							159	
8060	351	1	JR129	1249012C	X-DIM	SM( ) LTP/ / DLTU2 OR SMC1	()-112	332	L		SD5D201-01		DF									159	FORM PER ED5D503-30 G 129 TRANSMIT

COPYRIGHT @ 2001 LUCENT TECHNOLOGIES
ALL RIGHTS RESERVED

BT13

INTERCABINET CABLING
FOR
5ESS * SWITCH
*LUCENT TRADEMARK

DWG SIZE C2 | ISSUE 117

PRINTED IN U.S.A.

CONNECTORIZED CABLING

ITEM	LIST OR GROUP	NBR RECD	CABLE IDENT	CABLE CODE	B DIM	FROM							TO							ROUTE	SHLD	NOTE	REMARKS
						FRAME OR UNIT	EQL	TERM	POS	DROP LGTH	WIRING DIAGRAM	FIGURE	FRAME OR UNIT	EQL	TERM	POS	DROP LGTH	WIRING DIAGRAM	FIGURE				
8065	351	1	JR130	1249012C	X-DIM	SM( ) LTP/ / DLTU2 OR SMC1	()-176	332	R		SD5D201-01		DF									159	FORM PER ED5D503-30 G 130 TRANSMIT
8070	351	1	JR131	1249012C	X-DIM	SM( ) LTP/ / DLTU2 OR SMC1	()-112	132	L		SD5D201-01		DF									159	FORM PER ED5D503-30 G 131 RECEIVE
8075	351	1	JR132	1249012C	X-DIM	SM( ) LTP/ / DLTU2 OR SMC1	()-176	132	R		SD5D201-01		DF									159	FORM PER ED5D503-30 G 132 RECEIVE
8080	350A	1	JR117	606C	X-DIM	SM( ) LTP/ / DLTU2 OR SMC1	()-112	101	L		SD5D205-01		DIGITAL CLOCK SUPPLY									159	
8085	350A	1	JR118	606C	X-DIM	SM( ) LTP/ / DLTU2 OR SMC1	()-176	101	R		SD5D205-01		DIGITAL CLOCK SUPPLY									159	
8100	351A	1	JR137	608C	X-DIM	SM( ) LTP/ / DLTU2 OR SMC1	()-112	332	L		SD5D201-01		DF									159	FORM PER ED5D503-30 G 137 TRANSMIT
8105	351A	1	JR138	608C	X-DIM	SM( ) LTP/ / DLTU2 OR SMC1	()-176	332	R		SD5D201-01		DF									159	FORM PER ED5D503-30 G 138 TRANSMIT
8110	351A	1	JR139	608C	X-DIM	SM( ) LTP/ / DLTU2 OR SMC1	()-112	132	L		SD5D201-01		DF									159	FORM PER ED5D503-30 G 139 RECEIVE
8115	351A	1	JR140	608C	X-DIM	SM( ) LTP/ / DLTU2 OR SMC1	()-176	132	R		SD5D201-01		DF									159	FORM PER ED5D503-30 G 140 RECEIVE
8120	353	1	JR123	1249004C	X-DIM	SM( ) LTP/ / DLTU3 OR SMC1	()-098	101	L		SD5D501-01		DIGITAL CLOCK SUPPLY									159	
8125	353	1	JR124	1249004C	X-DIM	SM( ) LTP/ / DLTU3 OR SMC1	()-174	101	R		SD5D501-01		DIGITAL CLOCK SUPPLY									159	
8130	355	1	JR127	606C	X-DIM	SM( ) LTP/ / DLTU3 OR SMC1	()-098	301	L		SD5D501-01		CMCU	528-58 628-58	( ) ( ) SEE TBL BZ							159	

COPYRIGHT @ 2001 LUCENT TECHNOLOGIES
ALL RIGHTS RESERVED

BT13

INTERCABINET CABLING
FOR
5ESS * SWITCH
*LUCENT TRADEMARK

DWG SIZE C2 | ISSUE 117

LUCENT TECHNOLOGIES INC | ED5D500-21 | SHEET A139 OF 292

PRINTED IN U.S.A.

CONNECTORIZED CABLING

ITEM	LIST OR GROUP	NBR RECD	CABLE IDENT	CABLE CODE	B DIM	FROM							TO							ROUTE	SHLD	NOTE	REMARKS
						FRAME OR UNIT	EQL	TERM	POS	DROP LGTH	WIRING DIAGRAM	FIGURE	FRAME OR UNIT	EQL	TERM	POS	DROP LGTH	WIRING DIAGRAM	FIGURE				
8135	355	1	JR128	606C	X-DIM	SM( ) LTP/ / DLTU3 OR SMC1	()-174	301	R		SD5D501-01		CMCU	528-58 628-58	( ) ( ) SEE TBL BZ							159	
8140	354	1	JR133	1249012C	X-DIM	SM( ) LTP/ / DLTU3 OR SMC1	()-098	332	L		SD5D501-01		DF									159	FORM PER ED5D503-30 G 133 TRANSMIT
8145	354	1	JR134	1249012C	X-DIM	SM( ) LTP/ / DLTU3 OR SMC1	()-174	332	R		SD5D501-01		DF									159	FORM PER ED5D503-30 G 134 TRANSMIT
8150	354	1	JR135	1249012C	X-DIM	SM( ) LTP/ / DLTU3 OR SMC1	()-098	132	L		SD5D501-01		DF										FORM PER ED5D503-30 G 135 RECEIVE
8155	354	1	JR136	1249012C	X-DIM	SM( ) LTP/ / DLTU3 OR SMC1	()-174	132	R		SD5D501-01		DF									159	FORM PER ED5D503-30 G 136 RECEIVE
8160	353A	1	JR119	606C	X-DIM	SM( ) LTP/ / DLTU3 OR SMC1	()-098	101	L		SD5D501-01		DIGITAL CLOCK SUPPLY									159	
8165	353A	1	JR120	606C	X-DIM	SM( ) LTP/ / DLTU3 OR SMC1	()-174	101	R		SD5D501-01		DIGITAL CLOCK SUPPLY									159	
8180	354A	1	JR141	608C	X-DIM	SM( ) LTP/ / DLTU3 OR SMC1	()-098	332	L		SD5D501-01		DF									159	FORM PER ED5D503-30 G 141 TRANSMIT
8185	354A	1	JR142	608C	X-DIM	SM( ) LTP/ / DLTU3 OR SMC1	()-174	332	R		SD5D501-01		DF									159	FORM PER ED5D503-30 G 142 TRANSMIT
8190	354A	1	JR143	608C	X-DIM	SM( ) LTP/ / DLTU3 OR SMC1	()-098	132	L		SD5D501-01		DF									159	FORM PER ED5D503-30 G 143 RECEIVE
8195	354A	1	JR144	608C	X-DIM	SM( ) LTP/ / DLTU3 SMC1	()-174	132	R		SD5D501-01		DF									159	FORM PER ED5D503-30 G 144 RECEIVE
8200	370	1	JR370R	735A	X-DIM	SM( ) LTP/ / DNU-S//	( )- ( ) SEE TBL J2	( ) SEE TBL J2	L		SD5D525-01		DSX								3		FORM PER ED5D803-36 G 1 (REC) MAX LENGTH OF 225 FT WHEN LOCATED IN A CENTRAL OFFICE
8210	370	1	JR370T	735A	X-DIM	SM( ) LTP/ / DNU-S//	( )- ( ) SEE TBL J2	( ) SEE TBL J2	L		SD5D525-01		DSX								3		FORM PER ED5D803-36 G 1A (TRANS) MAX LENGTH OF 225 FT WHEN LOCATED IN A CENTRAL OFFICE

COPYRIGHT @ 2001 LUCENT TECHNOLOGIES
ALL RIGHTS RESERVED

BT13

INTERCABINET CABLING
FOR
5ESS * SWITCH
*LUCENT TRADEMARK

DWG SIZE C2 | ISSUE 117

LUCENT TECHNOLOGIES INC | ED5D500-21 | SHEET A140 OF 292

PRINTED IN U.S.A.

CONNECTORIZED CABLING

ITEM	LIST OR GROUP	NBR RECD	CABLE IDENT	CABLE CODE	B DIM	FROM							TO							ROUTE	SHLD	NOTE	REMARKS
						FRAME OR UNIT	EQL	TERM	POS	DROP LGTH	WIRING DIAGRAM	FIGURE	FRAME OR UNIT	EQL	TERM	POS	DROP LGTH	WIRING DIAGRAM	FIGURE				
8215	370A	1	JR370A	WP93875L6	X-DIM	SM( ) LTP/ / DNU-S//	( )- ( ) SEE TBL J6	( ) SEE TBL J6	L		SD5D825-01		DSX								3		FORM PER ED5D803-36 G 23 TRANS & REC (8 PAIRS) FOR SLI00 THRU 05 AND ONE SPARE OR SLI10 THRU 15 AND ONE SPARE MAX LENGTH OF 225 FT WHEN LOCATED IN A CENTRAL OFFICE
8220	371	1	JR371R	734D	X-DIM	SM( ) LTP/ / DNU-S//	( )- ( ) SEE TBL J3	( ) SEE TBL J3	L		SD5D525-01		DSX								3		FORM PER ED5D803-36 G 2 (REC) NOTE:CABLE CONSISTS OF A FIXED 2 FT LENGTH OF 735A CABLE AND SPLICED TO A MAXIMUM OF 448 FT 734D CABLE, FOR A MAXIMUM X-DIM LENGTH OF 450 FT.
8230	371	1	JR371T	734D	X-DIM	SM( ) LTP/ / DNU-S//	( )- ( ) SEE TBL J3	( ) SEE TBL J3	L		SD5D525-01		DSX								3		FORM PER ED5D803-36 G 2A (TRANS) NOTE:CABLE CONSISTS OF A FIXED 2 FT LENGTH OF 735A CABLE AND SPLICED TO A MAXIMUM OF 448 FT 734D CABLE, FOR A MAXIMUM X-DIM LENGTH OF 450 FT.
8236	373	1	JR373R	735A	X-DIM	SM( ) LTP/ / DNU-S//	( )- ( ) SEE TBL J4	( ) SEE TBL J4	L		SD5D525-01		DSX								3		FORM PER ED5D803-37 G 1 (REC) MAX LENGTH OF 225 FT WHEN LOCATED IN A CENTRAL OFFICE DSX TERMINATION WITH BNC CONNECTOR (KS23558,L16)
8238	373	1	JR373T	735A	X-DIM	SM( ) LTP/ / DNU-S//	( )- ( ) SEE TBL J4	( ) SEE TBL J4	L		SD5D525-01		DSX								3		FORM PER ED5D803-37 G 1A (TRANS) MAX LENGTH OF 225 FT WHEN LOCATED IN A CENTRAL OFFICE DSX TERMINATION WITH BNC CONNECTOR KS23558,L16
8240	374	1	JR374R	735A	X-DIM	SM( ) LTP/ / DNU-S//	( )- ( ) SEE TBL J5	( ) SEE TBL J5	L		SD5D525-01		MISC BRIDGE RE-PEATER BAY								3		FORM PER ED5D803-37 G 2 (REC) NOTE:735A CABLE WITH A MAX OF 225FT TERMINATING ON BRIDGE REPEATER BAY WITH LCC 111-012 CONNECTOR.
8242	374	1	JR374T	735A	X-DIM	SM( ) LTP/ / DNU-S//	( )- ( ) SEE TBL J5	( ) SEE TBL J5	L		SD5D525-01		MISC BRIDGE RE-PEATER BAY								3		FORM PER ED5D803-37 G 2A (TRANS) NOTE:735A CABLE WITH A MAX OF 225 FT TERMINATING ON A BRIDGE REPEATER BAY WITH A LCC 111-012 CONNECTOR
8244	374	1	JR375R	734D	X-DIM	MISC BRIDGE RE-PEATER BAY			L		SD5D525-01		DSX								3		FORM PER ED5D803-37 G 3 (REC) NOTE:734D CABLE HAS A MAXIMUN LENGTH OF 225 FT PLUS THE 225 FT OF 735A CABLE FOR A TOTAL X-DIM LENGTH OF 450 FT.THE 734D MAY EXCEED 225 FT ONLY WHEN THE 735A CA IS LESS THAN 225 FT.EXAMPLE: THE 734D CABLE CAN BE 350 FT IF THE 735A CABLE IS ONLY 100 FT.THE TOTAL MAXIMUM IS STILL ONLY 450 FT.
8246	374	1	JR375T	734D	X-DIM	MISC BRIDGE RE-PEATER BAY			L		SD5D525-01		DSX								3		FORM PER ED5D803-37 G 3A (TRANS) NOTE:734D CABLE HAS A MAXIMUN LENGTH OF 225 FT PLUS THE 225 FT OF 735A CABLE FOR A TOTAL X-DIM LENGTH OF 450 FT.THE 734D MAY EXCEED 225 FT ONLY WHEN THE 735A CA IS LESS THAN 225 FT.EXAMPLE: THE 734D CABLE CAN BE 350 FT IF THE 735A CABLE IS ONLY 100 FT.THE TOTAL MAXIMUM IS STILL ONLY 450 FT.
8250	380	1	JV380	1175ARD	X-DIM	SM( ) SMC // MCTU2 OR MCTU3	()-()	100	R				EXTER-NAL CLOCK REF										FORM PER ED5D901-30 G 1 APR-AUTO POWER RECOVERY A) STAMPING WHEN MCTU2 SG0 IS PROVIDED. ()19-156 B) STAMPING WHEN MCTU3 SG0 IS PROVIDED. ()28-084 REPL: ED5D503-32,G380 NEW GROUP IS RED JACKET CABLE.

COPYRIGHT @ 2001 LUCENT TECHNOLOGIES
ALL RIGHTS RESERVED

BT13

INTERCABINET CABLING
FOR
5ESS * SWITCH
*LUCENT TRADEMARK

DWG SIZE C2 | ISSUE 117

LUCENT TECHNOLOGIES INC | ED5D500-21 | SHEET OF A141 292

PRINTED IN U.S.A.

CONNECTORIZED CABLING

ITEM	LIST OR GROUP	NBR RECD	CABLE IDENT	CABLE CODE	B DIM	FROM							TO							ROUTE	SHLD	NOTE	REMARKS
						FRAME OR UNIT	EQL	TERM	POS	DROP LGTH	WIRING DIAGRAM	FIGURE	FRAME OR UNIT	EQL	TERM	POS	DROP LGTH	WIRING DIAGRAM	FIGURE				
8251	380	1	JV380A	1175ARD	X-DIM	SM ( ) SMC // MCTU2 OR MCTU3	()-()	100	R				EXTER- NAL CLOCK REF										FORM PER ED5D901-30 G 2 APR-AUTO POWER RECOVERY A) STAMPING WHEN MCTU2 SG1 IS PROVIDED. ()28-156 B) STAMPING WHEN MCTU3 SG1 IS PROVIDED. ()28-176 REPL: ED5D503-32,G380A NEW GROUP IS RED JACKET CABLE.
8255	381	1	JV381	1175ARD	X-DIM	SM( ) SMC // MCTU2 OR MCTU3	()-()	100	R				EXTER- NAL CLOCK										FORM PER ED5D901-30 G 3 NON-APR/AUTO POWER RECOVERY A) STAMPING WHEN MCTU2 SG0 IS PROVIDED. ()19-156 B) STAMPING WHEN MCTU3 SG0 IS PROVIDED. ()28-084 REPL: ED5D503-32,G381 NEW GROUP IS RED JACKET CABLE.
8256	381	1	JV381A	1175ARD	X-DIM	SM() SMC // MCTU2 OR MCTU3	()-()	100	R				EXTER- NAL CLOCK REF										FORM PER ED5D901-30 G 4 NON-APR-AUTO POWER RECOVERY A) STAMPING WHEN MCTU2 SG1 IS PROVIDED. ()28-156 B) STAMPING WHEN MCTU3 SG1 IS PROVIDED. ()28-176 REPL: ED5D503-32,G381A NEW GROUP IS RED JACKET CABLE.
8300	400	1	JV400	285A	X-DIM	SM( ) SMC // LTP/ / CSU	SEE REMKS				SD5D530-01		LTP/ / DCTU										FORM PER ED5D502-18 G 200 SEE TBL MA
8310	401	1	JV401	285A	X-DIM	SM( ) SMC // LTP/ / CSU	SEE REMKS				SD5D530-01		LTP/ / LU2/LU3										FORM PER ED5D502-22 G 200 SEE TBL MA1 FOR LU2 SEE TBL MA2 FOR LU3
8320	402	1	JV402	285A	X-DIM	SM( ) SMC // LTP/ / CSU	SEE REMKS				SD5D530-01		LTP/ / TU										FORM PER ED5D502-23 G 200 SEE TBL MA3
8330	403	1	JV403	285A	X-DIM	SM( ) SMC // LTP/ / CSU	SEE REMKS				SD5D530-01		LTP/ / TSTRK										FORM PER ED5D502-24 G 200 SEE TBL MA4
8340	404	1	JV404	285A	X-DIM	SM( ) SMC // LTP/ / CSU	SEE REMKS				SD5D530-01		LTP/ / ISLU2										FORM PER ED5D502-21 G 200 SEE TBL MA5
8345	405	1	JV405	285A	X-DIM	SM ( ) SMC // LTP/ / CSU	SEE REMKS				SD5D530-01		LTP/ / ISLU										FORM PER ED5D502-21 G 201 SEE TBL MA6
8350	450	1	JV450	1249004A	X-DIM	SM2000 TSIU4 --- TSIU4-2	( )62- 020 --- ( )45- 017	353 --- 353					DLTU3	()-022 ()-038	100 100								FORM PER ED5D765-17 G 18 (30 CH SIDE 0)
8360	450	1	JV451	1249004A	X-DIM	SM2000 TSIU4 --- TSIU4-2	( )62- 116 --- ( )53- 017	353 --- 353					DLTU3	()-022 ()-038	300 300								FORM PER ED5D765-17 G 19 (30 CH SIDE 1)

COPYRIGHT @ 2001 LUCENT TECHNOLOGIES
ALL RIGHTS RESERVED

BT13

INTERCABINET CABLING
FOR
5ESS * SWITCH
*LUCENT TRADEMARK

DWG SIZE C2 | ISSUE 117

PRINTED IN U.S.A.

CONNECTORIZED CABLING

ITEM	LIST OR GROUP	NBR RECD	CABLE IDENT	CABLE CODE	B DIM	FROM							TO							ROUTE	SHLD	NOTE	REMARKS
						FRAME OR UNIT	EQL	TERM	POS	DROP LGTH	WIRING DIAGRAM	FIGURE	FRAME OR UNIT	EQL	TERM	POS	DROP LGTH	WIRING DIAGRAM	FIGURE				
8370	451	1	JV452	1249004A	X-DIM	SM2000 TSIU4 TSIU4-2	( )62- 020 ( )45- 017	353 353					DLTU3	()-022 ()-038	100 100								FORM PER ED5D765-17 G 20 (30 CH SIDE 0 /EMC TRTMNT)
8380	451	1	JV453	1249004A	X-DIM	SM2000 TSIU4 TSIU4-2	( )62- 116 ( )53- 017	353 353					DLTU3	()-022 ()-038	300 300								FORM PER ED5D765-17 G 21 (30 CH SIDE 1 /EMC TRTNMT)
8390	452	1	JV454	1249004A	X-DIM	SM2000 TSIU4 TSIU4-2	( )62- 020 ( )45- 017	353 353					BITS BX										FORM PER ED5D765-17 G 22 (30 CH SIDE 0)
8400	452	1	JV455	1249004A	X-DIM	SM2000 TSIU4 TSIU4-2	( )62- 116 ( )53- 017	353 353					BITS BX										FORM PER ED5D765-17 G 23 (30 CH SIDE 1)
8410	453	1	JV456	1249004A	X-DIM	SM2000 TSIU4 TSIU4-2	( )62- 020 ( )45- 017	353 353					BITS BX										FORM PER ED5D765-17 G 24 (30 CH SIDE 0/W EMC TRTMNT)
8420	453	1	JV457	1249004A	X-DIM	SM2000 TSIU4 TSIU4-2	( )62- 116 ( )53- 017	353 353					BITS BX										FORM PER ED5D765-17 G 25 (30 CH SIDE 1/W EMC TRTMNT)
8430	454	1	JV458	1175ARD	X-DIM	SM2000 TSIU4 TSIU4-2	( )62- 020 ( )45- 017	353 353					BITS BX										FORM PER ED5D901-30 G 5 (24 CH SIDE 0) REPL: ED5D765-17,G26 NEW GROUP IS RED JACKET CABLE.
8440	454	1	JV459	1175ARD	X-DIM	SM2000 TSIU4 TSIU4-2	( )62- 116 ( )53- 017	353 353					BITS BX										FORM PER ED5D901-30 G 6 (24 CH SIDE 1) REPL: ED5D765-17,G27 NEW GROUP IS RED JACKET CABLE.
8450	455	1	JV460	1175ARD	X-DIM	SM2000 TSIU4 TSIU4-2	( )62- 020 ( )45- 017	353 353					BITS BX										FORM PER ED5D901-30 G 7 (24 CH SIDE 0/W EMC TRTMNT) REPL: ED5D765-17,G28 NEW GROUP IS RED JACKET CABLE.
8460	455	1	JV461	1175ARD	X-DIM	SM2000 TSIU4 TSIU4-2	( )62- 116 ( )53- 017	353 353					BITS BX										FORM PER ED5D901-30 G 8 (24 CH SIDE 1/W EMC TRTMNT) REPL: ED5D765-17,G29 NEW GROUP IS RED JACKET CABLE.
8470	460	1	NT001	812A	X-DIM	M// NTT			L	7-0	SD5D130-01		MDF								3	199 59	BULK CABLE SEE MISC TABLE T.
8475	461	1	NT002	606C	X-DIM	M// NTT			L	7-0	SD5D130-01		DSX								3	199 59	BULK CABLE SEE MISC TABLE T.

COPYRIGHT @ 2001 LUCENT TECHNOLOGIES
ALL RIGHTS RESERVED

BT13

INTERCABINET CABLING
FOR
5ESS * SWITCH
*LUCENT TRADEMARK

DWG SIZE C2 | ISSUE 117

PRINTED IN U.S.A.

CONNECTORIZED CABLING

ITEM	LIST OR GROUP	NBR RECD	CABLE IDENT	CABLE CODE	B DIM	FROM							TO							ROUTE	SHLD	NOTE	REMARKS
						FRAME OR UNIT	EQL	TERM	POS	DROP LGTH	WIRING DIAGRAM	FIGURE	FRAME OR UNIT	EQL	TERM	POS	DROP LGTH	WIRING DIAGRAM	FIGURE				
8480	461A	1	NT003	1249002C	X-DIM	M/ / NTT			L	7-0	SD5D130-01		DSX								3	19959	BULK CABLE SEE MISC TABLE T.
8485	462	1	NT004	1249002A	X-DIM	M/ / NTT			L	7-0	SD5D130-01		DSX								3	19959	BULK CABLE SEE MISC TABLE T.
8490	463	1	NT005	285A	X-DIM	SM/ / LTP/ / OR SMC/ / MMSU/ /	/J1/ ( )- ( ) /J2/ ( )- ( ) /J3/ ( )- ( ) /J4/ ( )- ( )	( ) ( ) ( ) ( ) SEE TBL CC5	L	SEE TBL DA & DB	SD5D016-01		M/ / NTT	/ /- AI-TDB/*/		L					3		FORM PER ED5D503-30 G 75 * AI-TDB CP NUMBERS ARE 1 THRU 6.
8495	464	1	NT006	285A	X-DIM	SM/ / LTP/ / OR SMC/ / MMSU/ /	/J1/ ( )- ( ) /J2/ ( )- ( ) /J3/ ( )- ( ) /J4/ ( )- ( )	( ) ( ) ( ) ( ) SEE TBL CC5	R	SEE TBL DA & DB	SD5D130-01		M/ / NTT	/ /- AI-TDB/*/							3		FORM PER ED5D503-30 G 76 * AI-TDB CP NUMBERS ARE 1 THRU 6.

COPYRIGHT @ 2001 LUCENT TECHNOLOGIES
ALL RIGHTS RESERVED

BT13

INTERCABINET CABLING
FOR
5ESS * SWITCH
*LUCENT TRADEMARK

DWG SIZE C2 | ISSUE 117

LUCENT TECHNOLOGIES INC | ED5D500-21 | SHEET A144 OF 292

PRINTED IN U.S.A.

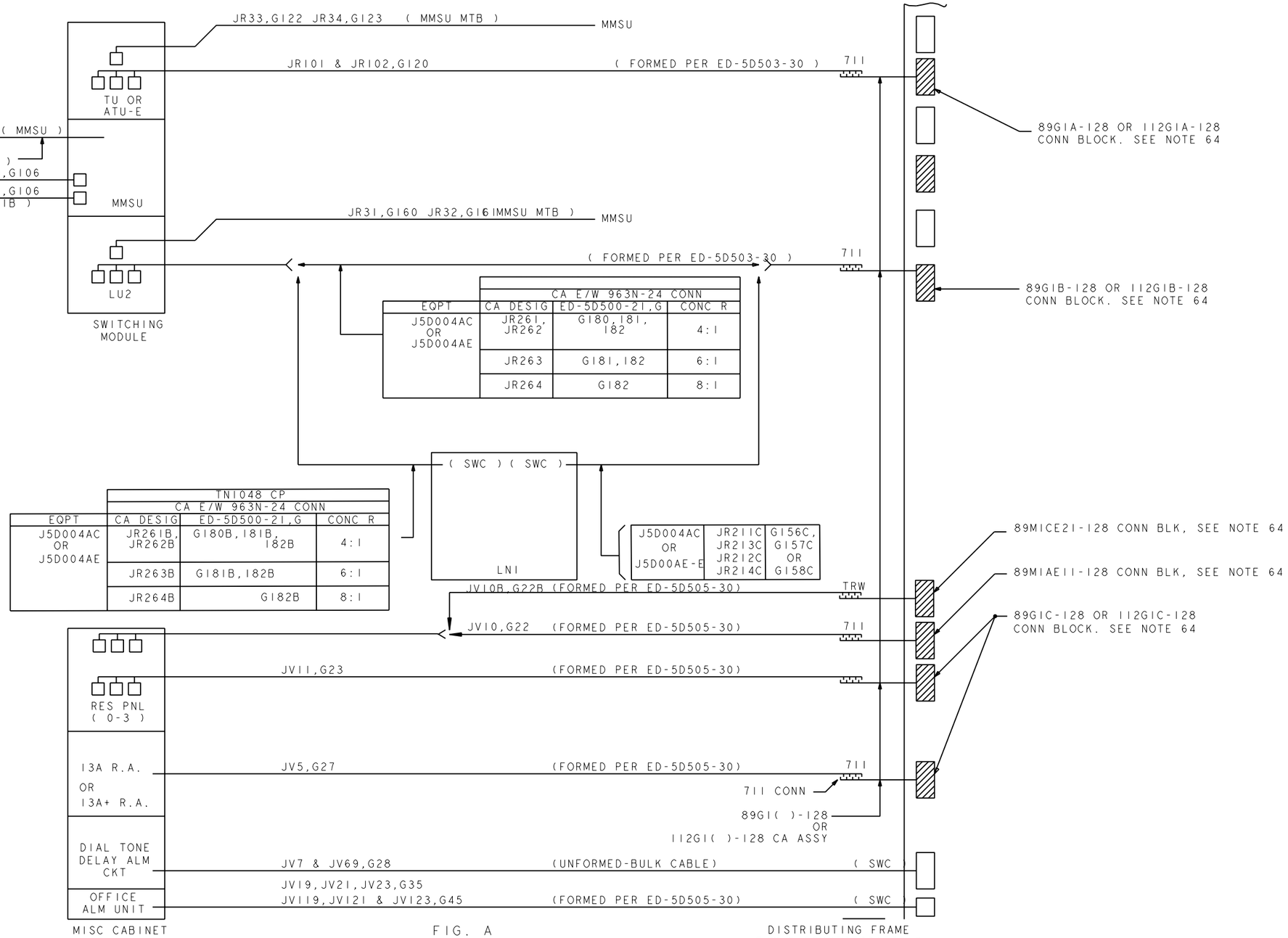

FIG. A

CABLING ARRANGEMENT FOR DISTRIBUTING FRAME
E/W CONNECTORIZED BLOCKS & 711 OR TRW TYPE CONNECTORS

TITLE	INTERCABINET CABLING
THIRD ANGLE PROJECTION	LUCENT TECHNOLOGIES - PROPRIETARY USE PURSUANT TO COMPANY INSTRUCTIONS
Lucent Technologies Inc.	ED5D500-21
SHEET	B1
ISSUE	112
DWG SIZE	C2/AIR

ED5D500-21

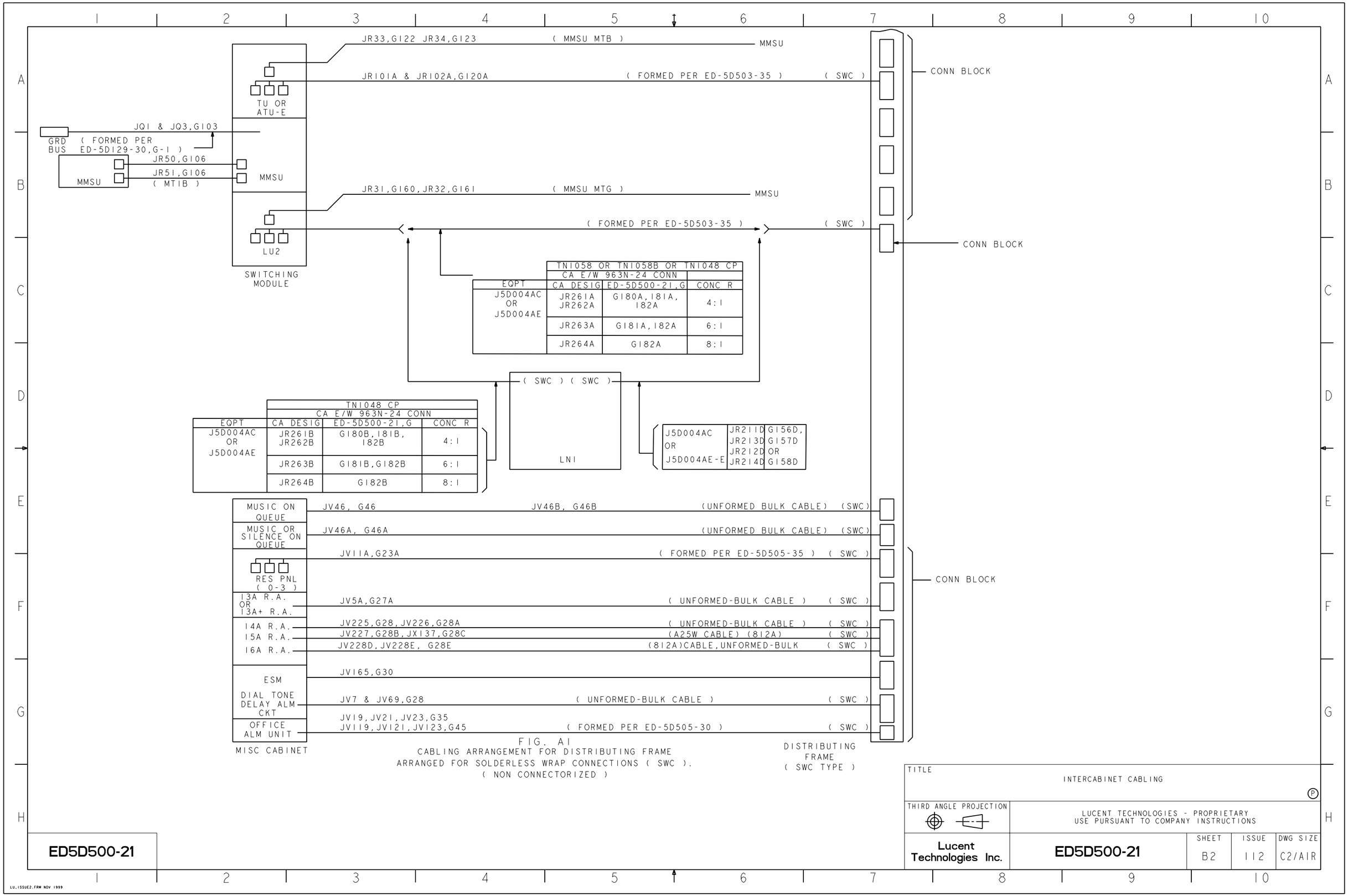

FIG. A1
CABLING ARRANGEMENT FOR DISTRIBUTING FRAME
ARRANGED FOR SOLDERLESS WRAP CONNECTIONS (SWC).
(NON CONNECTORIZED)

TITLE: INTERCABINET CABLING

THIRD ANGLE PROJECTION

LUCENT TECHNOLOGIES - PROPRIETARY
USE PURSUANT TO COMPANY INSTRUCTIONS

Lucent Technologies Inc.

ED5D500-21

SHEET	ISSUE	DWG SIZE
B2	112	C2/AIR

ED5D500-21

AT&T 89 TYPE BLK E/W TRW CONN	TN1058 OR TN1058B OR TN1048 CP		
	LU CA E/W 963N-24 CONN		
LU2 J5D004AC-2	JR261E	G180E G181E G182E	4:1
	JR262E		
	JR263E	G181E G182E	6:1
	JR264E	G182E	8:1

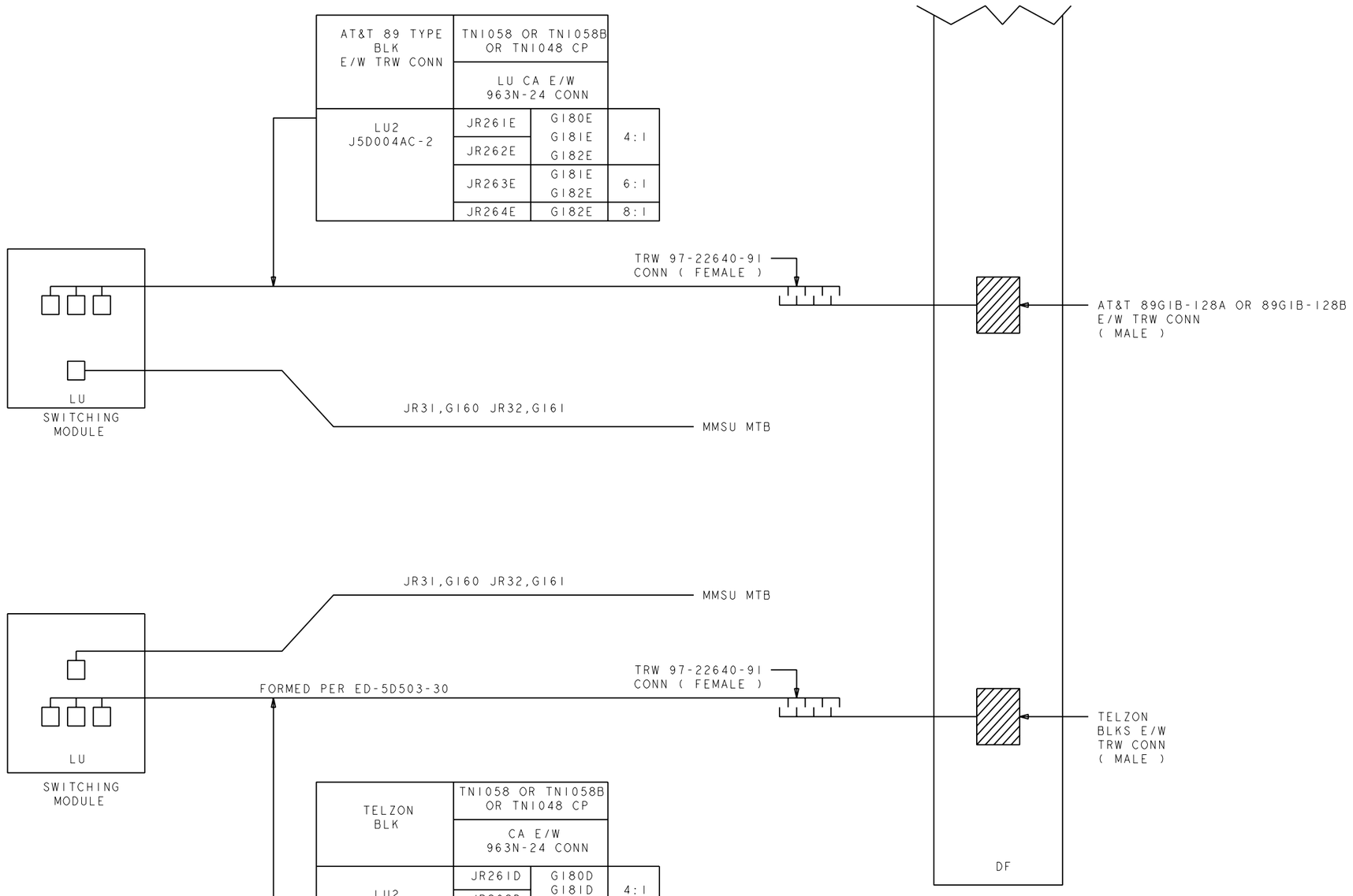

TELZON BLK	TN1058 OR TN1058B OR TN1048 CP		
	CA E/W 963N-24 CONN		
LU2 J5D004AC	JR261D	G180D G181D G182D	4:1
	JR262D		
	JR263D	G181D G182D	6:1
	JR264D	G182D	8:1

FIG. A2
CABLING ARRANGEMENT FOR DISTRIBUTING FRAME
E/W CONNECTORIZED TELZON BLKS AND TRW CONNECTORS
OR
DF E/W AT&T 89 TYPE BLOCKS AND TRW CONNECTORS

TITLE			
INTERCABINET CABLING Ⓟ			
THIRD ANGLE PROJECTION	LUCENT TECHNOLOGIES - PROPRIETARY USE PURSUANT TO COMPANY INSTRUCTIONS		
Lucent Technologies Inc.	ED5D500-21	SHEET B3	ISSUE 112 / DWG SIZE C2/AIR

ED5D500-21

LU.ISSUE2.FRM NOV 1999

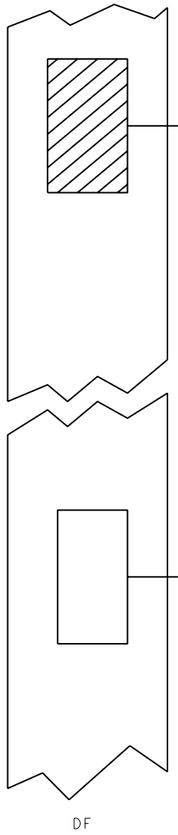

MMSU

LU3 MTB CA JR31 (G160), JR32 (G161)

LU4 MTB CA JR31A (G160A), JR32A (G161A)

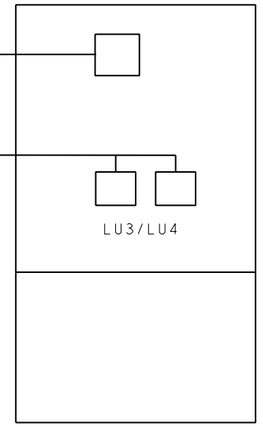

DF BLK	EQUIPMENT	CA DESIG	ED-5D500-21 GRP	CONC R	
E/W 711	LU3 J5D004AD	JR281 JR282	183,184,185,186	4:1	FORM PER ED-5D503-30
		JR283	184,185,186	6:1	
		JR284	185,186	8:1	
		JR285	186	10:1	
E/W 711	LU4 J5D004AN	JR400 JR401	225,226,227	4:1	FORM PER ED-5D708-34
		JR402	226,227	6:1	
		JR403	227	8:1	
SWC	LU3 J5D004AD	JR281A JR282A	183A,184A 185A,186A	4:1	FORM PER ED-5D503-35
		JR283A	184A,185A,186A	6:1	
		JR284A	185A,186A	8:1	
		JR285A	186A	10:1	
SWC	LU4 J5D004AN	JR400A JR401A	225A,226A,227A	4:1	FORM PER ED-5D708-34
		JR402A	226A,227A	6:1	
		JR403A	227A	8:1	
TELZON E/W TRW	LU3 J5D004AD	JR281D JR282D	183D,184D,185D 186D	4:1	FORM PER ED-5D503-30
		JR283D	184D,185D,186D	6:1	
		JR284D	185D,186D	8:1	
		JR285D	186D	10:1	
BLOCKS E/W TRW (89G BLKS)	LU3 J5D004AD	JR281E JR282E	183E,184E,185E 186E	4:1	FORM PER ED-5D503-30
		JR283E	184E,185E,186E	6:1	
		JR284E	185E,186E	8:1	
		JR285E	186E	10:1	

FIG. A3

LU3 CABLING ARRANGEMENT FOR DISTRIBUTING FRAME
(SWC, E/W 711 CONN OR TRW CONN OR TELZON BLKS)

OR

LU4 CABLING ARRANGEMENT FOR DISTRIBUTING FRAME
(SWC OR E/W 711 CONN)

TITLE: INTERCABINET CABLING				
THIRD ANGLE PROJECTION	LUCENT TECHNOLOGIES - PROPRIETARY USE PURSUANT TO COMPANY INSTRUCTIONS			
Lucent Technologies Inc.	ED5D500-21	SHEET B4	ISSUE 112	DWG SIZE C2/AIR

ED5D500-21

LU.ISSUE2.FRM NOV 1999

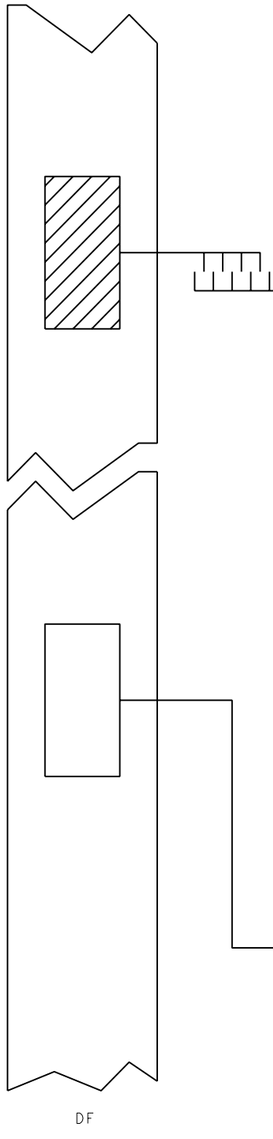

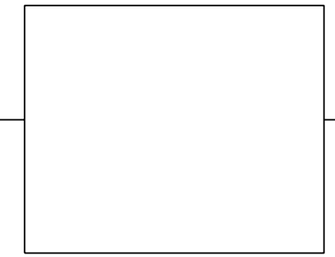

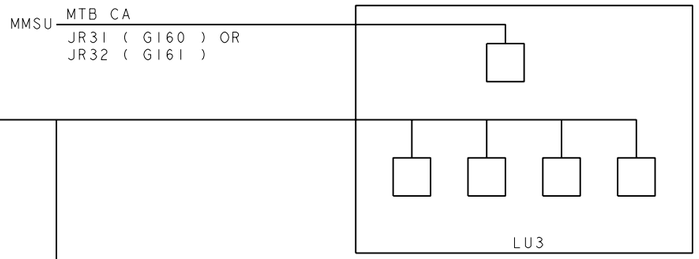

DF BLK	EQPT	CA DESIG	ED-5D500-21,G	CONC R	
E/W 711	LNI J5D009B	JR211C JR213C	GI56C,157C,158C, GI59C	4:1	FORMED PER ED-5D503-30
		JR212C	GI57C,158C,159C	6:1	
		JR214C	GI58C,159C	8:1	
		JR215C	GI59C	10:1	
SWC	LNI J5D009B	JR211D JR213D	GI56D,157D,158D GI59D	4:1	BULK CABLE
		JR212D	GI57D,158D,159D	6:1	
		JR214D	GI58D,159D	8:1	
		JR215D	GI59D	10:1	

EQPT	CA DESIG	ED-5D500-21,G	CONC R	
LU3 J5D004AD	JR281B JR282B	GI83B,184B GI85B,186B	4:1	FORMED PER ED-5D503-35
	JR283B	GI84B,185B,186B	6:1	
	JR284B	GI85B,186B	8:1	
	JR285B	GI86B	10:1	

FIG. A4
LU3 CABLING ARRANGEMENT FOR DISTRIBUTING FRAME
WHEN LNI FRAME IS REQUIRED

TITLE: INTERCABINET CABLING

THIRD ANGLE PROJECTION

LUCENT TECHNOLOGIES - PROPRIETARY
USE PURSUANT TO COMPANY INSTRUCTIONS

Lucent Technologies Inc.

ED5D500-21

SHEET	ISSUE	DWG SIZE
B5	112	C2/AIR

ED5D500-21

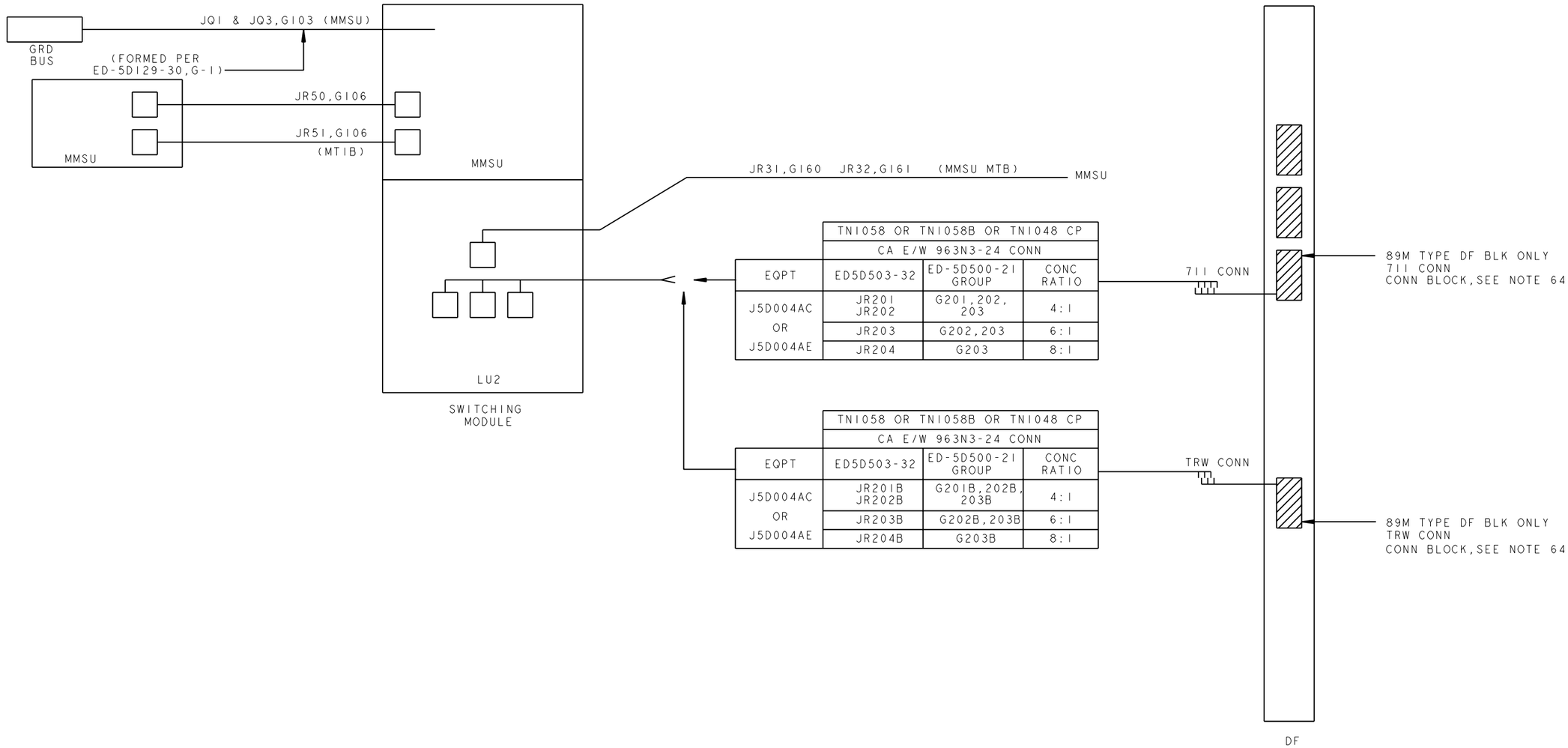

FIG.A5

CABLING ARRANGEMENT FOR DISTRIBUTING FRAME
E/W 711 OR TRW CONN
AND 89M TYPE DF BLKS

TITLE: INTERCABINET CABLING				
THIRD ANGLE PROJECTION	LUCENT TECHNOLOGIES - PROPRIETARY USE PURSUANT TO COMPANY INSTRUCTIONS			
Lucent Technologies Inc.	ED5D500-21	SHEET B6	ISSUE 112	DWG SIZE C2/AIR

ED5D500-21

LU.ISSUE2.FRM NOV 1999

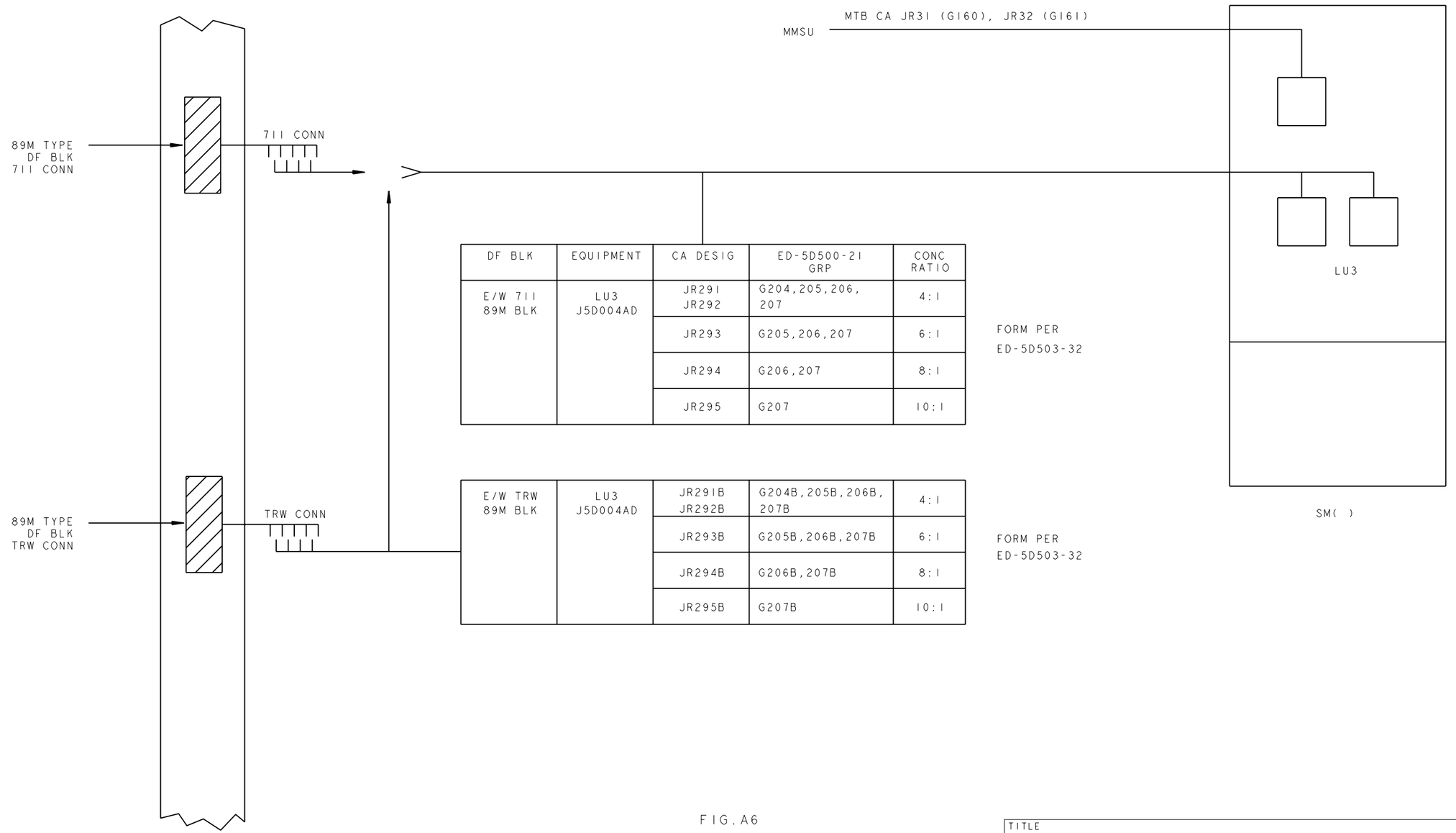

DF BLK	EQUIPMENT	CA DESIG	ED-5D500-21 GRP	CONC RATIO
E/W 711 89M BLK	LU3 J5D004AD	JR291 JR292	G204,205,206, 207	4:1
		JR293	G205,206,207	6:1
		JR294	G206,207	8:1
		JR295	G207	10:1

FORM PER
ED-5D503-32

E/W TRW 89M BLK	LU3 J5D004AD	JR291B JR292B	G204B,205B,206B, 207B	4:1
		JR293B	G205B,206B,207B	6:1
		JR294B	G206B,207B	8:1
		JR295B	G207B	10:1

FORM PER
ED-5D503-32

FIG. A6

LU3 CABLING ARRANGEMENT FOR DISTRIBUTING FRAME
E/W 711 OR TRW CONN
89M TYPE DF BLKS ONLY

TITLE
INTERCABINET CABLING

THIRD ANGLE PROJECTION

LUCENT TECHNOLOGIES - PROPRIETARY
USE PURSUANT TO COMPANY INSTRUCTIONS

Lucent Technologies Inc.

ED5D500-21

SHEET	ISSUE	DWG SIZE
B7	112	C2/AIR

LU.ISSUE2.FRM NOV 1999

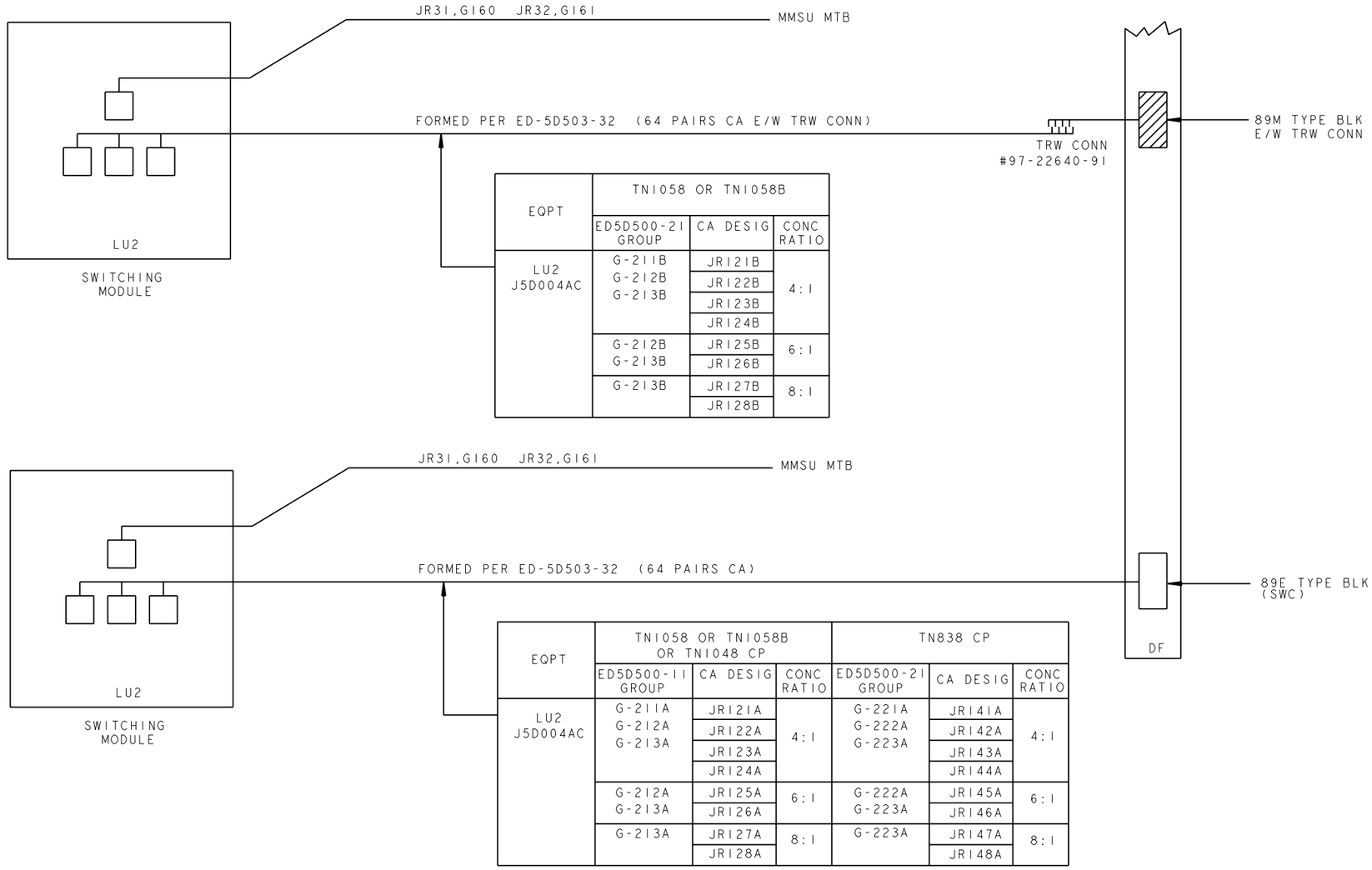

EQPT	TN1058 OR TN1058B		
	ED5D500-21 GROUP	CA DESIG	CONC RATIO
LU2 J5D004AC	G-211B G-212B G-213B	JR121B	4:1
		JR122B	
		JR123B	
		JR124B	
	G-212B G-213B	JR125B	6:1
		JR126B	
	G-213B	JR127B	8:1
		JR128B	

EQPT	TN1058 OR TN1058B OR TN1048 CP			TN838 CP		
	ED5D500-11 GROUP	CA DESIG	CONC RATIO	ED5D500-21 GROUP	CA DESIG	CONC RATIO
LU2 J5D004AC	G-211A G-212A G-213A	JR121A	4:1	G-221A G-222A G-223A	JR141A	4:1
		JR122A			JR142A	
		JR123A			JR143A	
		JR124A			JR144A	
	G-212A G-213A	JR125A	6:1	G-222A G-223A	JR145A	6:1
		JR126A			JR146A	
	G-213A	JR127A	8:1	G-223A	JR147A	8:1
		JR128A			JR148A	

FIG. A7

LINE UNIT MOD2 CABLING GROUPS
USING 64 PAIR CABLES

TITLE: INTERCABINET CABLING

THIRD ANGLE PROJECTION

LUCENT TECHNOLOGIES - PROPRIETARY
USE PURSUANT TO COMPANY INSTRUCTIONS

Lucent Technologies Inc.

ED5D500-21

SHEET	ISSUE	DWG SIZE
B8	112	C2/AIR

LU_ISSUE2.FRM NOV 1999

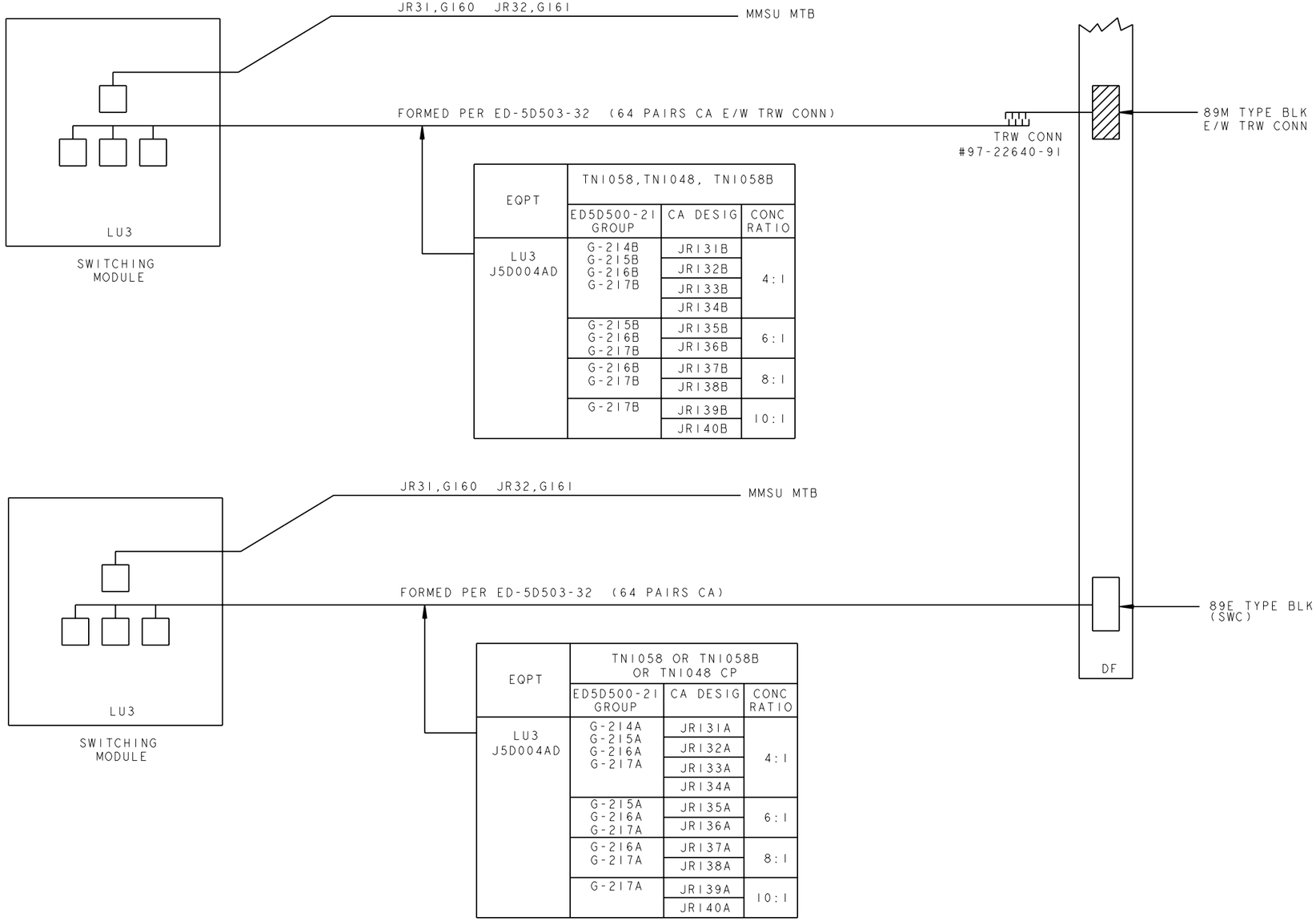

EQPT	TN1058,TN1048, TN1058B		
	ED5D500-21 GROUP	CA DESIG	CONC RATIO
LU3 J5D004AD	G-214B G-215B G-216B G-217B	JR131B	4:1
		JR132B	
		JR133B	
		JR134B	
	G-215B G-216B G-217B	JR135B	6:1
		JR136B	
	G-216B G-217B	JR137B	8:1
		JR138B	
	G-217B	JR139B	10:1
		JR140B	

EQPT	TN1058 OR TN1058B OR TN1048 CP		
	ED5D500-21 GROUP	CA DESIG	CONC RATIO
LU3 J5D004AD	G-214A G-215A G-216A G-217A	JR131A	4:1
		JR132A	
		JR133A	
		JR134A	
	G-215A G-216A G-217A	JR135A	6:1
		JR136A	
	G-216A G-217A	JR137A	8:1
		JR138A	
	G-217A	JR139A	10:1
		JR140A	

FIG.A8

LINE UNIT MOD3 CABLING GROUPS
USING 64 PAIR CABLES

COPYRIGHT © 1998 LUCENT TECHNOLOGIES ALL RIGHTS RESERVED
LUCENT TECHNOLOGIES PROPRIETARY
USE PURSUANT TO COMPANY INSTRUCTIONS

TITLE: INTERCABINET CABLING

THIRD ANGLE PROJECTION

Lucent Technologies Inc.

ED5D500-21

SHEET	ISSUE	DWG SIZE
B9	112	C2/AIR

LU_ISSUE2.FRM NOV 1999

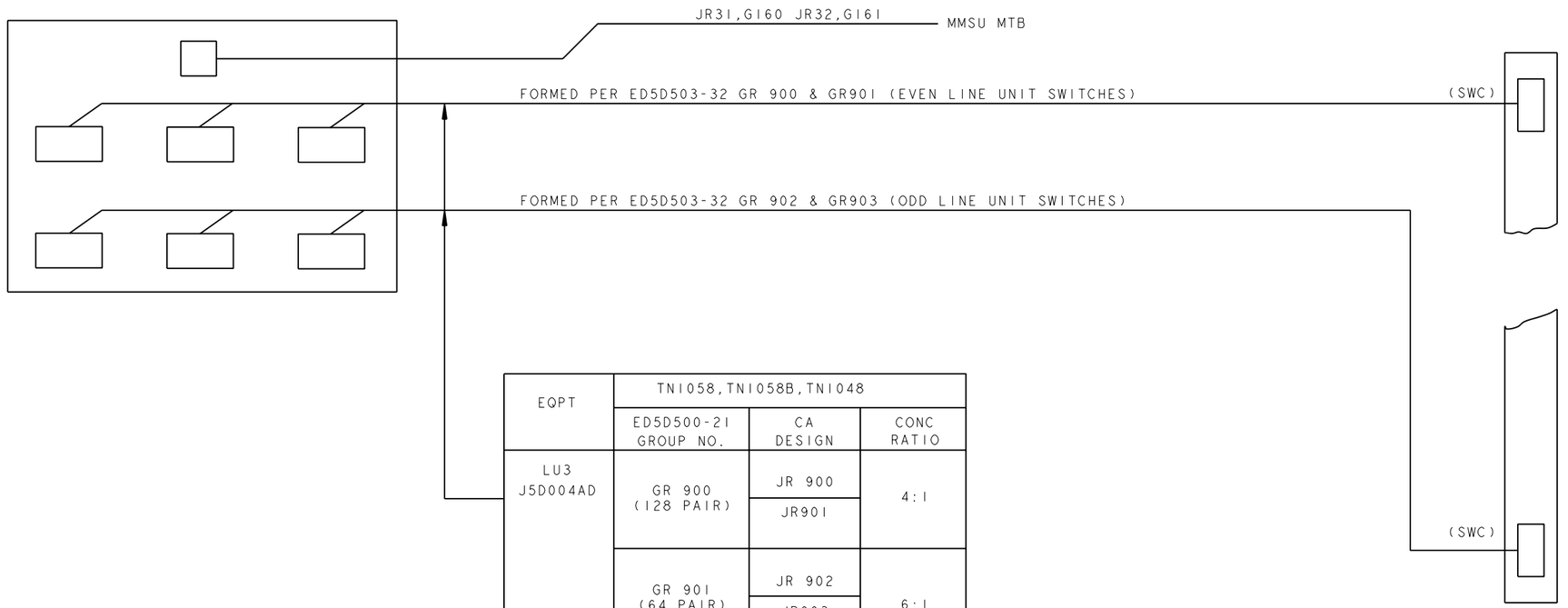

EQPT	TN1058,TN1058B,TN1048		
	ED5D500-21 GROUP NO.	CA DESIGN	CONC RATIO
LU3 J5D004AD	GR 900 (128 PAIR)	JR 900	4:1
		JR901	
	GR 901 (64 PAIR)	JR 902	6:1
		JR903	

FIG. A9

NYNEX REQUEST FOR A LU3 CABLING ARRANGEMENT
FOR EVEN NO. SWITCHES TERMINATING ON ONE DF AND
ODD NO. SWITCHES TERMINATING ON ANOTHER DF

TITLE: INTERCABINET CABLING

THIRD ANGLE PROJECTION

LUCENT TECHNOLOGIES - PROPRIETARY
USE PURSUANT TO COMPANY INSTRUCTIONS

Lucent Technologies Inc.

ED5D500-21

SHEET	ISSUE	DWG SIZE
B10	112	C2/AIR

ED5D500-21

CABLE	CABLE	FRAME
JR301	JR301B	DLTU-1 (IN)
JR313	JR313B	DCLU-1 SG0 (IN)
JR317	JR317B	DCLU-1 SGI (IN)
JR321	JR321B	DCLU-SUPL-1 (IN)

CABLE	CABLE	FRAME
JR303	JR303B	DLTU-1 (OUT)
JR311	JR311B	DCLU-1 SG0 (OUT)
JR315	JR315B	DCLU-1 SGI (OUT)
JR319	JR319B	DCLU-SUPL-1 (OUT)

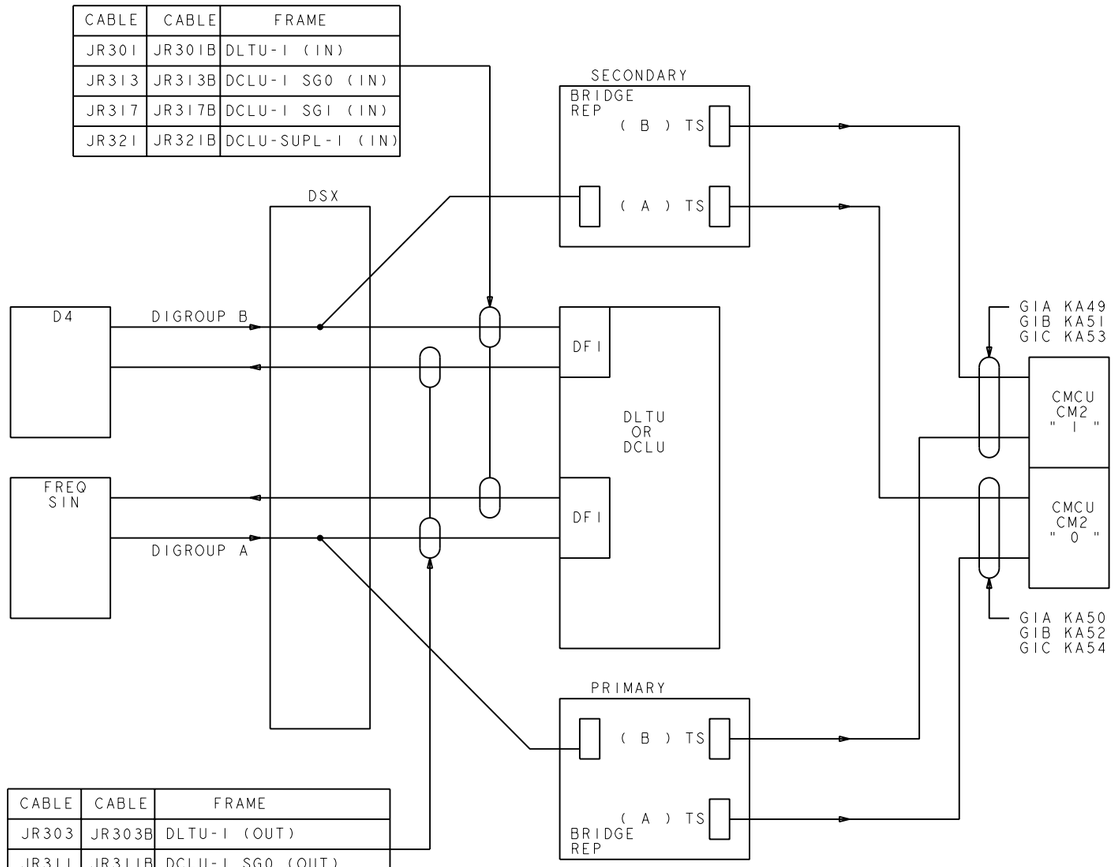

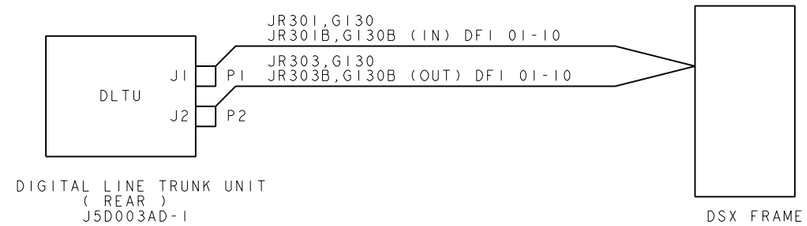

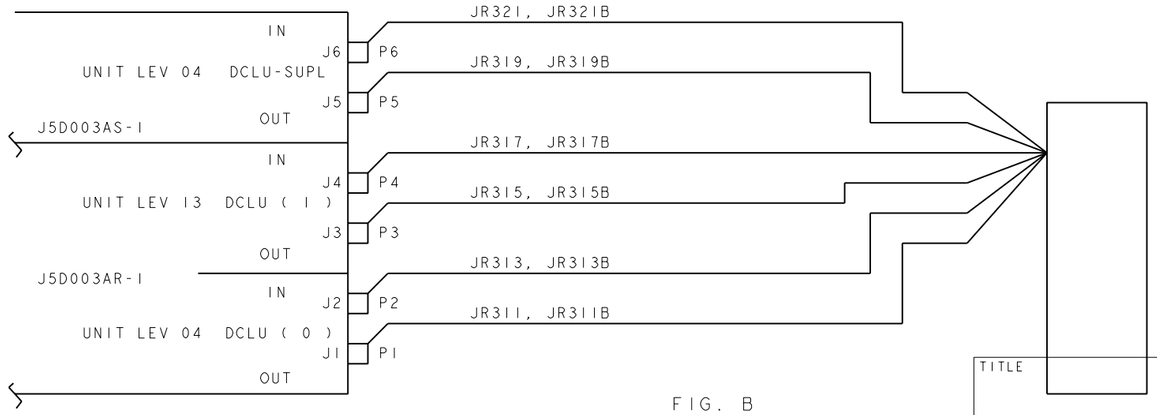

DIGITAL CARRIER LINE UNIT 1
(REAR)
MOD 1

FIG. B
DSX FRAME AND BRIDGE REP CABLING TERMINATIONS

THIRD ANGLE PROJECTION

TITLE: INTERCABINET CABLING

DSX FRAME

LUCENT TECHNOLOGIES - PROPRIETARY
USE PURSUANT TO COMPANY INSTRUCTIONS

Lucent Technologies Inc.

ED5D500-21

SHEET	ISSUE	DWG SIZE
B11	112	C2/AIR

ED5D500-21

CABLE	CABLE	FRAME
JR301A	JR301C	DLTU-2 (IN)
JR311A	JR311C	DCLU-2 SG0 (IN)
JR315A	JR315C	DCLU-2 SG1 (IN)
JR319A	JR319C	DCLU-SUPL-2 (IN)

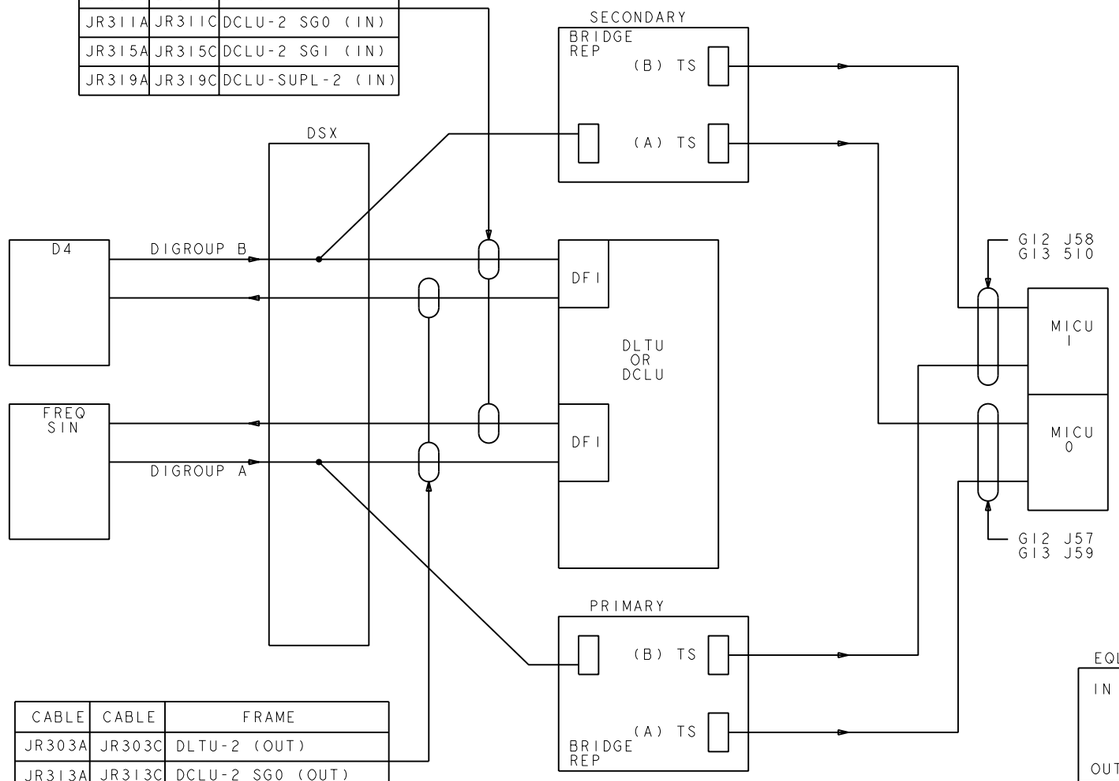

CABLE	CABLE	FRAME
JR303A	JR303C	DLTU-2 (OUT)
JR313A	JR313C	DCLU-2 SG0 (OUT)
JR317A	JR317C	DCLU-2 SG1 (OUT)
JR321A	JR321C	DCLU-SUPL-2 (OUT)

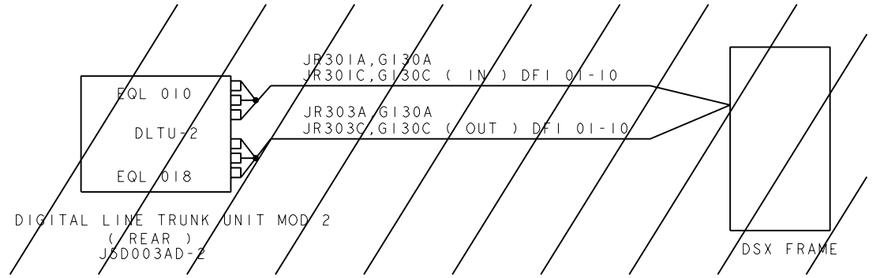

DIGITAL LINE TRUNK UNIT MOD 2
(REAR)
J5D003AD-2

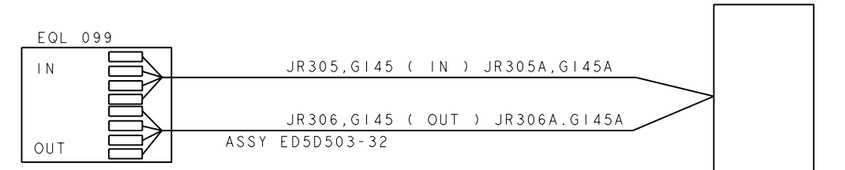

DIGITAL LINE TRUNK UNIT 2
(REAR)
J5D024AA-1

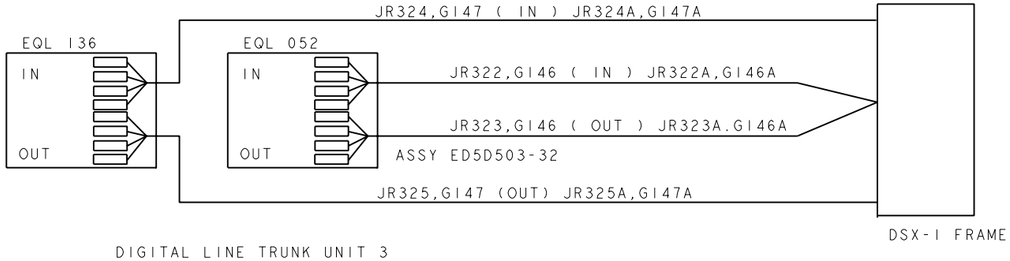

DIGITAL LINE TRUNK UNIT 3
(REAR)
J5D003FN-1

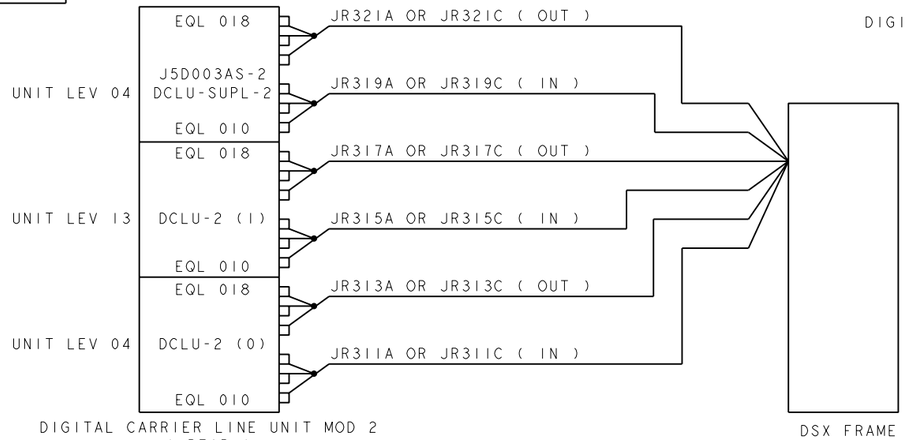

DIGITAL CARRIER LINE UNIT MOD 2
(REAR)
J5D003AR-2

FIG. B1
DSX FRAME AND BRIDGE REP CABLING TERMINATIONS

TITLE
INTERCABINET CABLING

THIRD ANGLE PROJECTION

LUCENT TECHNOLOGIES - PROPRIETARY
USE PURSUANT TO COMPANY INSTRUCTIONS

Lucent Technologies Inc.

ED5D500-21

SHEET	ISSUE	DWG SIZE
B12	112	C2/AIR

ED5D500-21

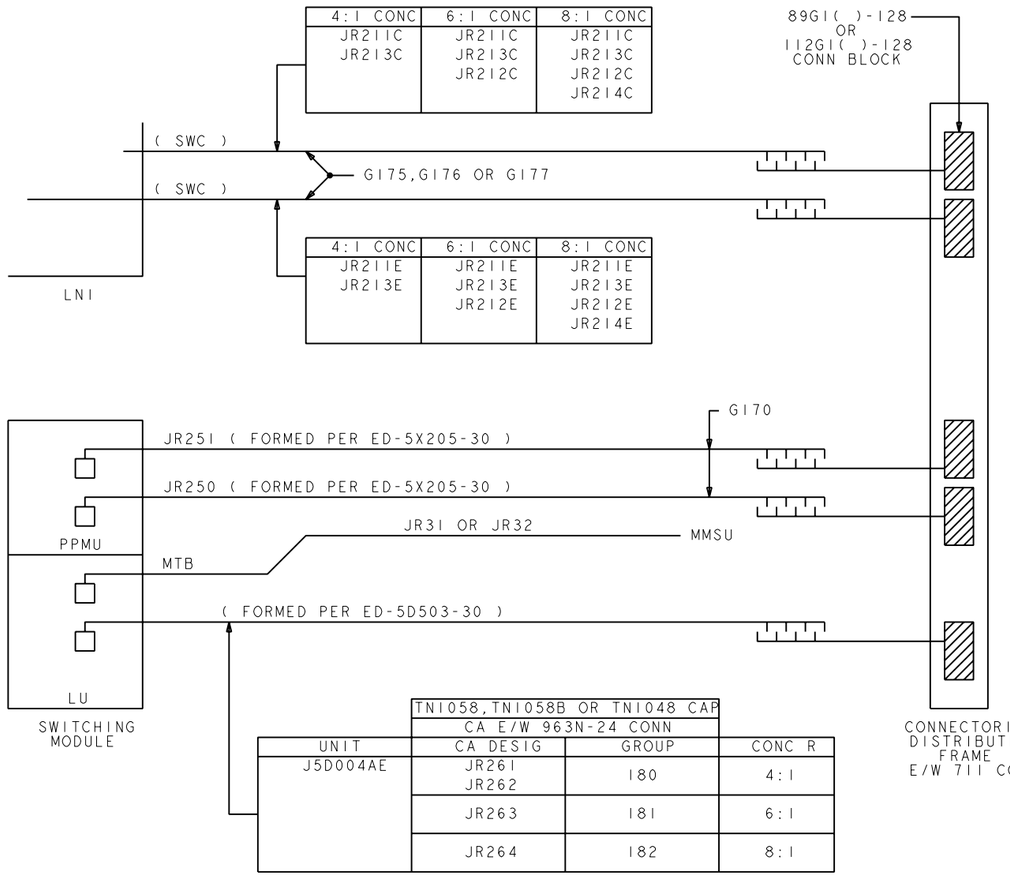

FIG. C

CABLING ARRANGEMENT FOR PPMU INTERCONNECTED TO A CONNECTORIZED DISTRIBUTING FRAME E/W 7II CONNECTORS.

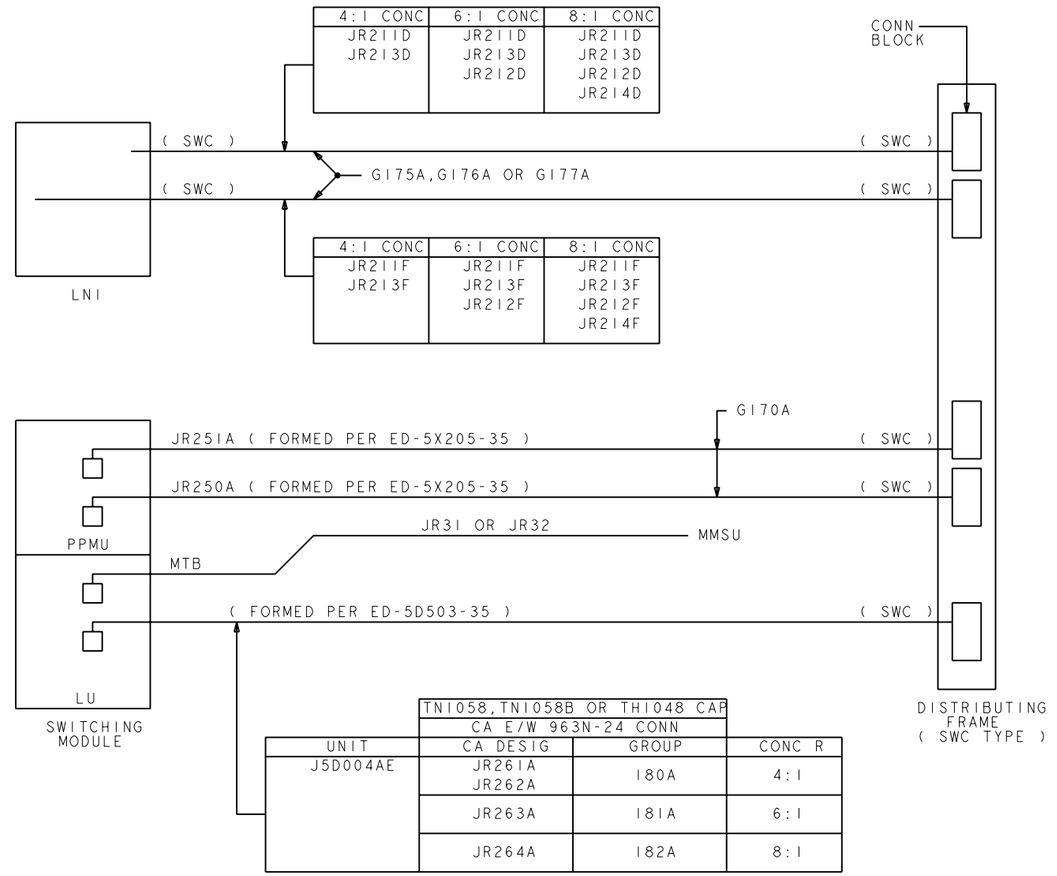

FIG. CI

CABLING ARRANGEMENT FOR PPMU INTERCONNECTED TO A DISTRIBUTING FRAME DESIGNED FOR SOLDERLESS WRAP CONNECTIONS.

TITLE: INTERCABINET CABLING (P)				
THIRD ANGLE PROJECTION	LUCENT TECHNOLOGIES - PROPRIETARY USE PURSUANT TO COMPANY INSTRUCTIONS			
Lucent Technologies Inc.	ED5D500-21	SHEET B13	ISSUE 112	DWG SIZE C2/AIR

ED5D500-21

LU.ISSUE2.FRM NOV 1999

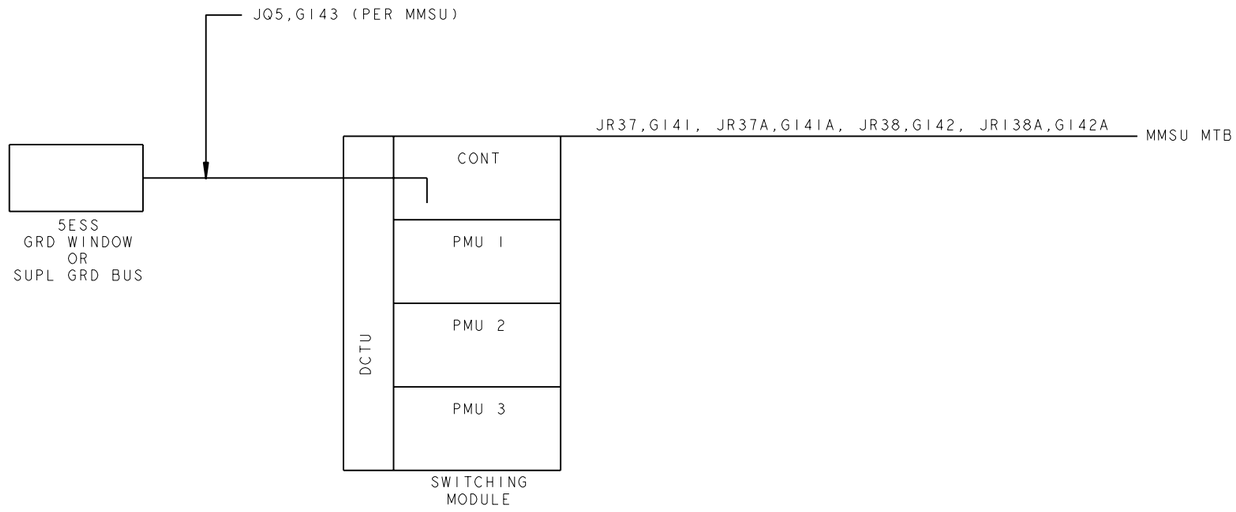

DCTU MTB TO MMSU

FIG. D

TITLE: INTERCABINET CABLING Ⓟ					
THIRD ANGLE PROJECTION	LUCENT TECHNOLOGIES - PROPRIETARY USE PURSUANT TO COMPANY INSTRUCTIONS				
Lucent Technologies Inc.	ED5D500-21	SHEET B14	ISSUE 112	DWG SIZE C2/AIR	

ED5D500-21

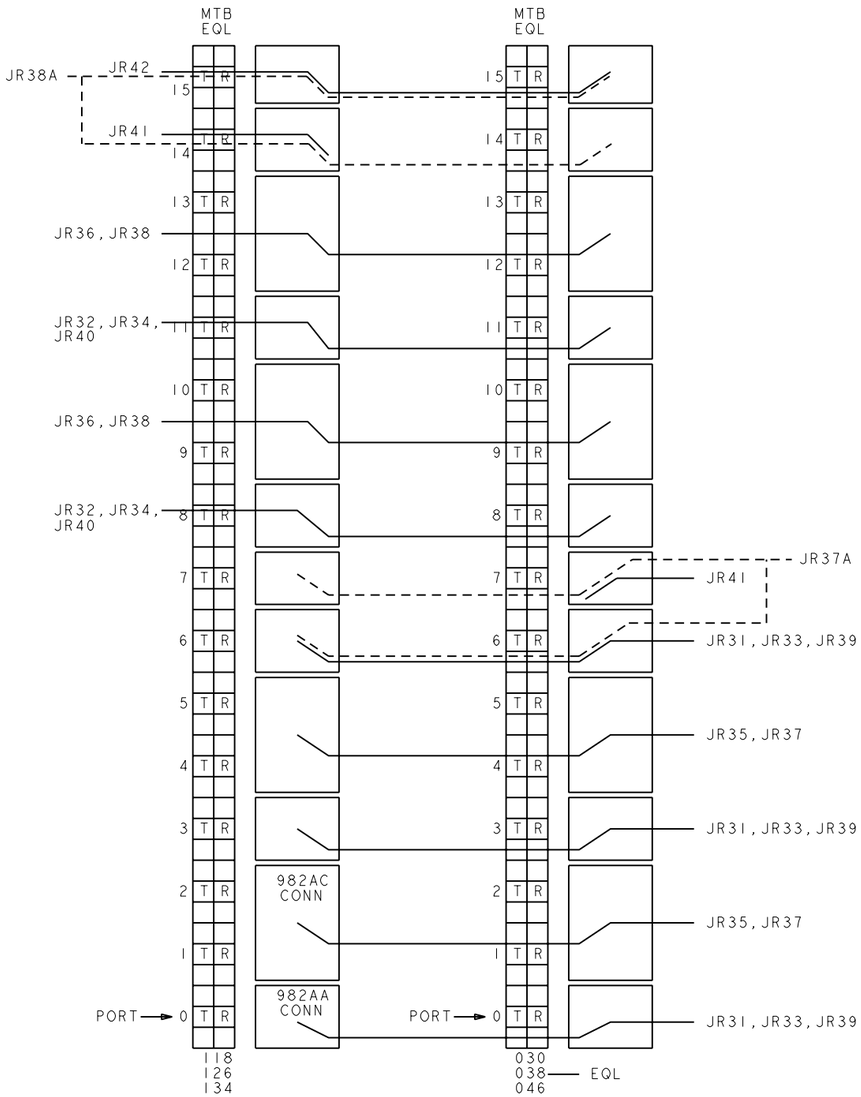

FIG. E
TYPICAL MTB CABLING
REAR VIEW

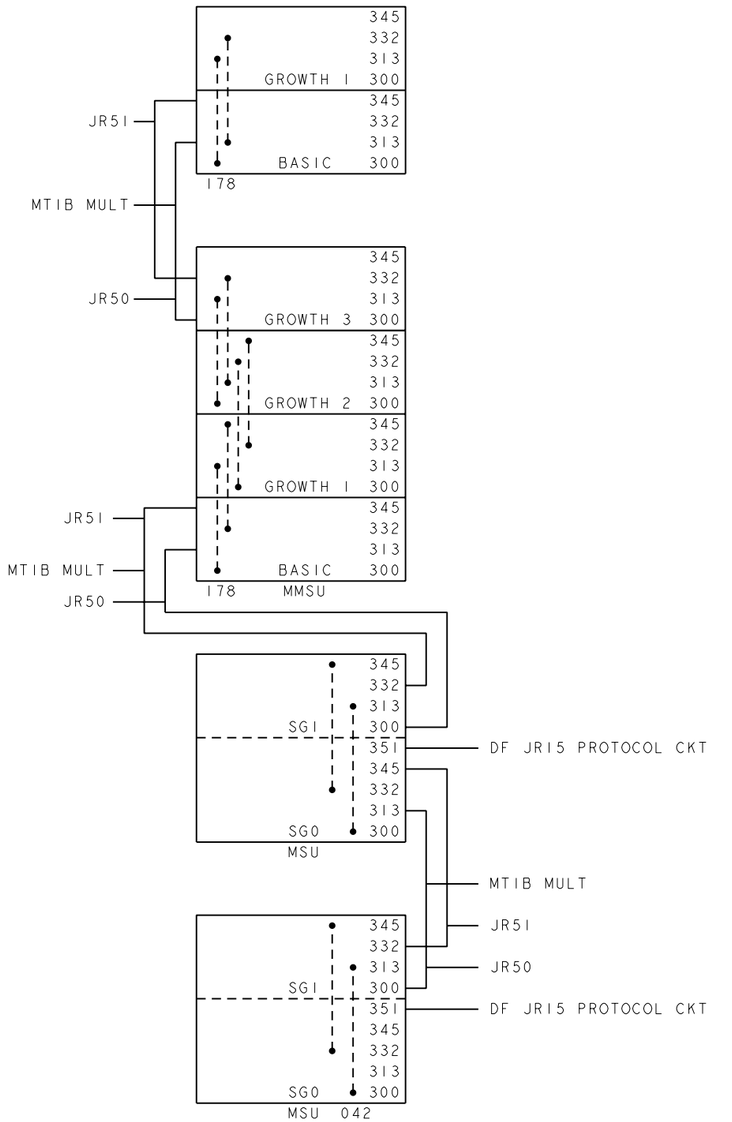

MSU-MMSU MTIB MULT
FIG. F

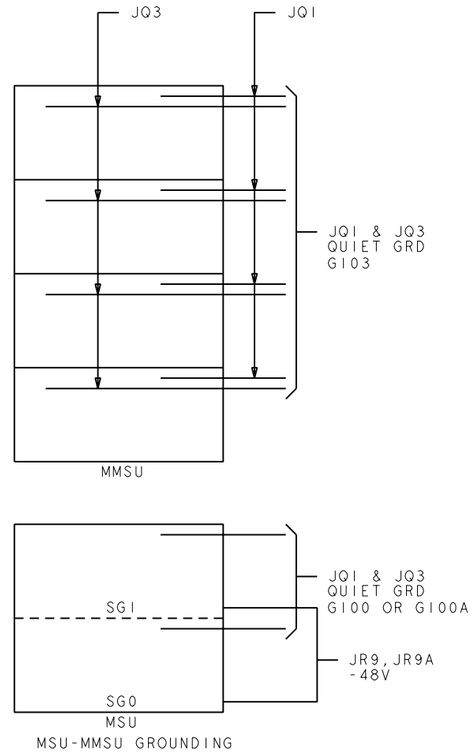

MSU-MMSU GROUNDING
FIG. G

TITLE
INTERCABINET CABLING

THIRD ANGLE PROJECTION

LUCENT TECHNOLOGIES - PROPRIETARY
USE PURSUANT TO COMPANY INSTRUCTIONS

Lucent Technologies Inc.

ED5D500-21

SHEET	ISSUE	DWG SIZE
B15	112	C2/AIR

ED5D500-21

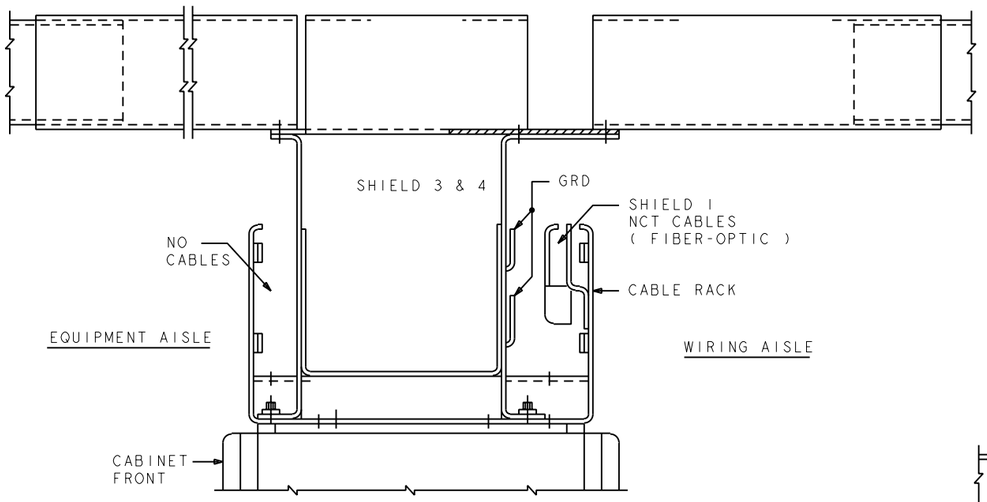

SIDE VIEW
CABLE RACK ARRANGEMENT PER ED-5D511-14
FOR 6 FOOT CABINETS

FIG.H

(DA) REPLACED BY FIG.HI

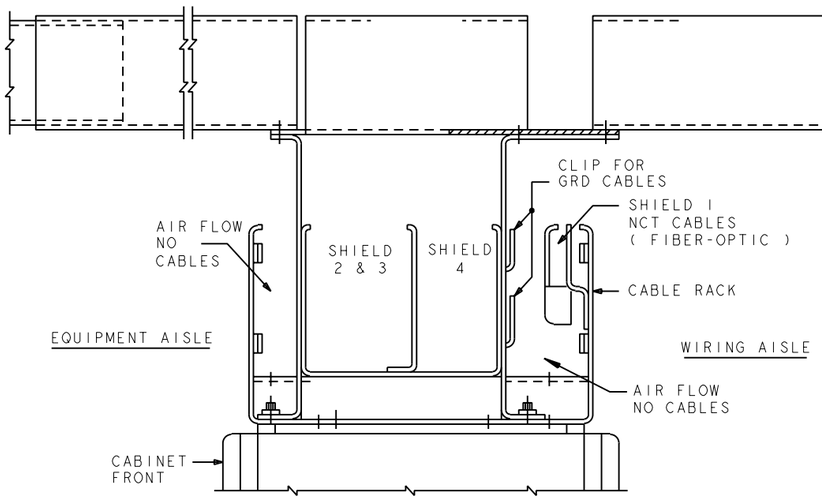

SIDE VIEW
CABLE RACK ARRANGEMENT PER ED5D511-18
FOR 6 FOOT CABINETS

FIG.HI

TITLE: INTERCABINET CABLING Ⓟ				
THIRD ANGLE PROJECTION	LUCENT TECHNOLOGIES - PROPRIETARY USE PURSUANT TO COMPANY INSTRUCTIONS			
Lucent Technologies Inc.	ED5D500-21	SHEET B16	ISSUE 112	DWG SIZE C2/AIR

ED5D500-21

LU.ISSUE2.FRM NOV 1999

NOTE:
SEE FIG.J1 WHEN RARU PER J5D005C-1,LI6,LX & LZ OR LAA IS SPECIFIED FOR AUDIBLE AND/OR VISUAL ALARMS

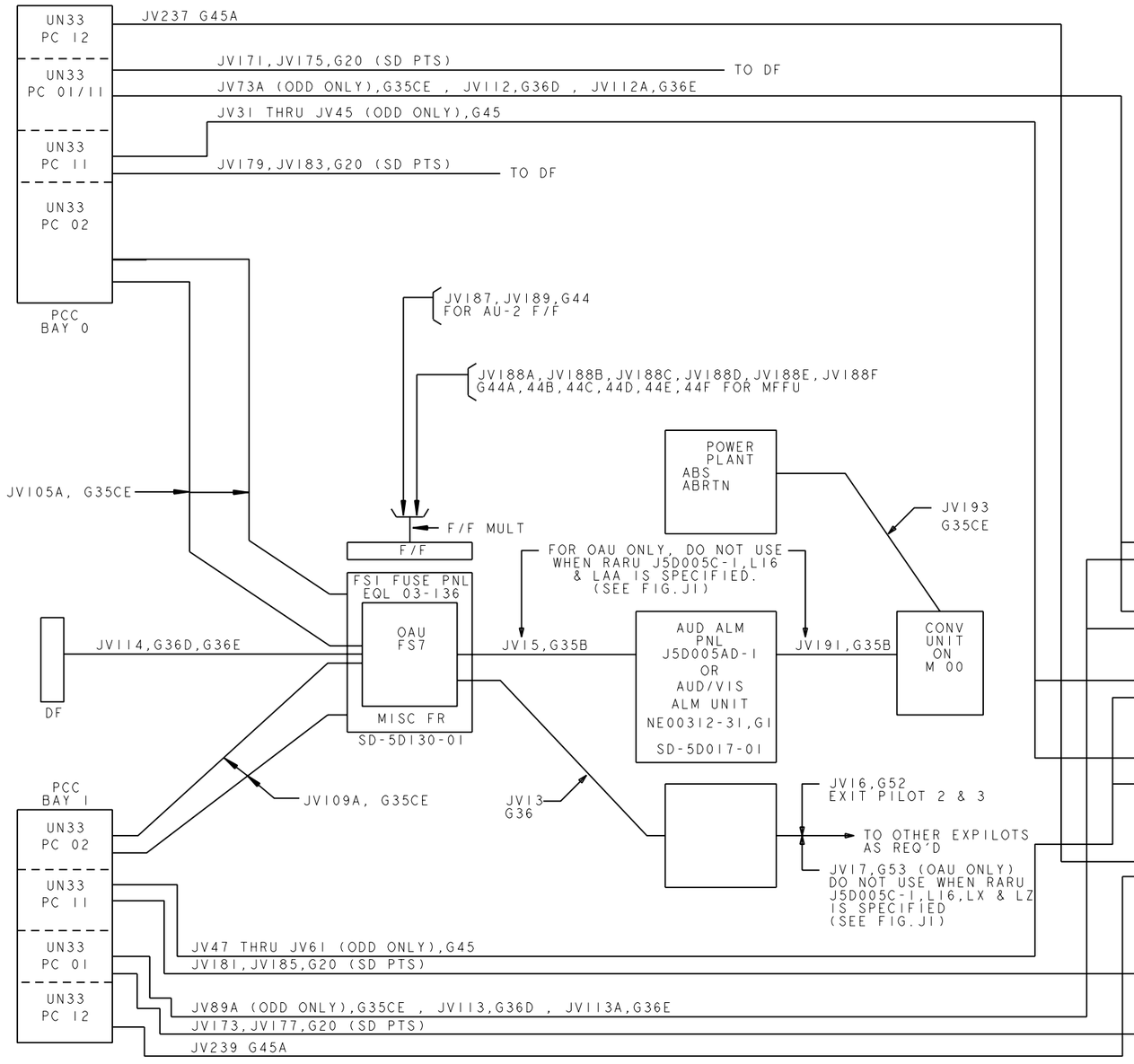

FIG.J
OFFICE ALARM CIRCUIT

TABLE SC
SCSD TERMINAL FIELD SHOWING SCANNER & SIGNAL DISTRIBUTING POINTS

	0	0	5	4	3	2	1	0	
56									56
55	SC47P	SC47N	SC43P	SC43N	SC39P	SC39N	SC35P	SC35N	55
54	SC46P	SC46N	SC42P	SC42N	SC38P	SC38N	SC34P	SC34N	54
53	SC31P	SC31N	SC23P	SC23N	SC15P	SC15N	SC07P	SC07N	53
52	SC30P	SC30N	SC22P	SC22N	SC14P	SC14N	SC06P	SC06N	52
51	SD31P	SD31N	SD23P	SD23N	SD15P	SD15N	SD07P	SD07N	51
50	SD30P	SD30N	SD22P	SD22N	SD14P	SD14N	SD06P	SD06N	50
49	SC29P	SC29N	SC21P	SC21N	SC13P	SC13N	SC05P	SC05N	49
48	SC28P	SC28N	SC20P	SC20N	SC12P	SC12N	SC04P	SC04N	48
47	SD29P	SD29N	SD21P	SD21N	SD13P	SD13N	SD05P	SD05N	47
46	SD28P	SD28N	SD20P	SD20N	SD12P	SD12N	SD04P	SD04N	46
45	ER	ER	ER	ER	ER	ER	ER	ER	45
44			-48V3	-48R	+12E	+12E	-12E	-12E	44
43									43
42	SC45P	SC45N	SC41P	SC41N	SC37P	SC37N	SC33P	SC33N	42
41	SC44P	SC44N	SC40P	SC40N	SC36P	SC36N	SC32P	SC32N	41
40	SC27P	SC27N	SC19P	SC19N	SC11P	SC11N	SC03P	SC03N	40
39	SC26P	SC26N	SC18P	SC18N	SC10P	SC10N	SC02P	SC02N	39
38	SD27P	SD27N	SD19P	SD19N	SD11P	SD11N	SD03P	SD03N	38
37	SD26P	SD26N	SD18P	SD18N	SD10P	SD10N	SD02P	SD02N	37
36	SC25P	SC25N	SC17P	SC17N	SC09P	SC09N	SC01P	SC01N	36
35	SC24P	SC24N	SC16P	SC16N	SC08P	SC08N	SC00P	SC00N	35
34	SD25P	SD25N	SD17P	SD17N	SD09P	SD09N	SD01P	SD01N	34
33	SD24P	SD24N	SD16P	SD16N	SD08P	SD08N	SD00P	SD00N	33
32	ER	ER	ER	ER	ER	ER	ER	ER	32
	0	0	5	4	3	2	1	0	
	HOR EQL		HOR EQL OF UN33						

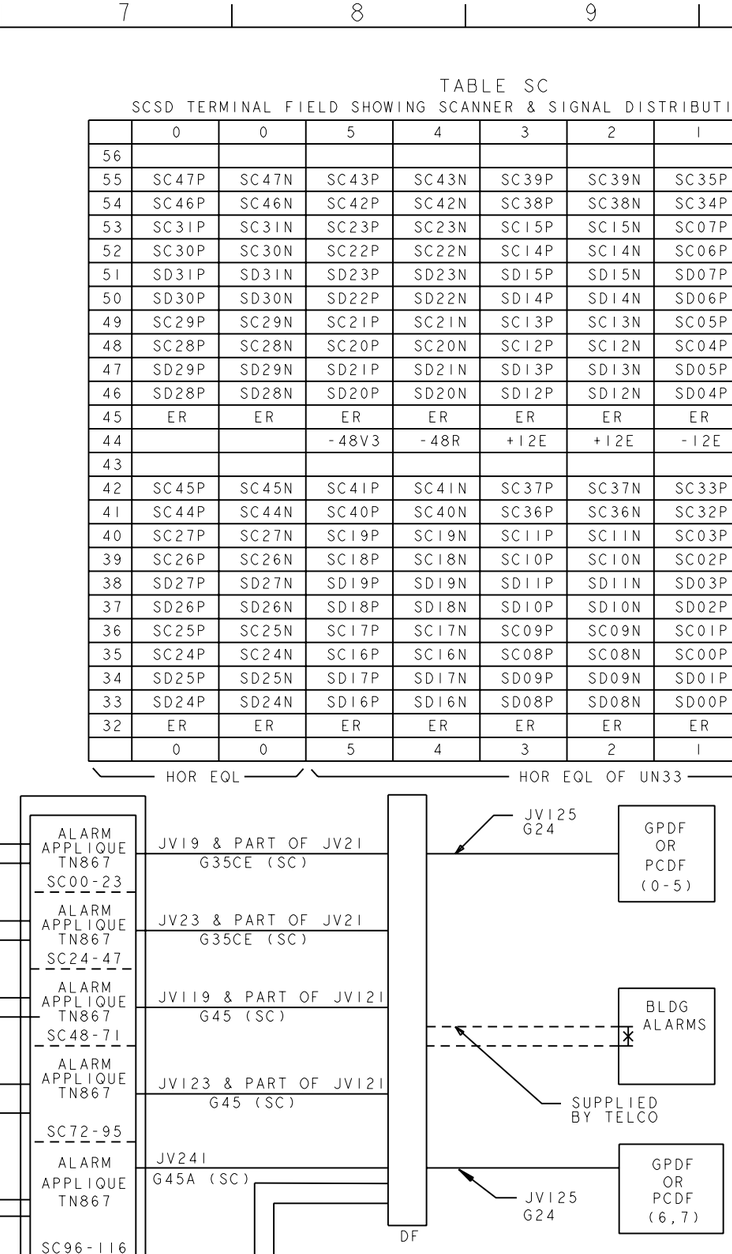

TITLE: INTERCABINET CABLING

THIRD ANGLE PROJECTION

LUCENT TECHNOLOGIES - PROPRIETARY
USE PURSUANT TO COMPANY INSTRUCTIONS

Lucent Technologies Inc.

ED5D500-21

SHEET	ISSUE	DWG SIZE
B17	112	C2/AIR

ED5D500-21

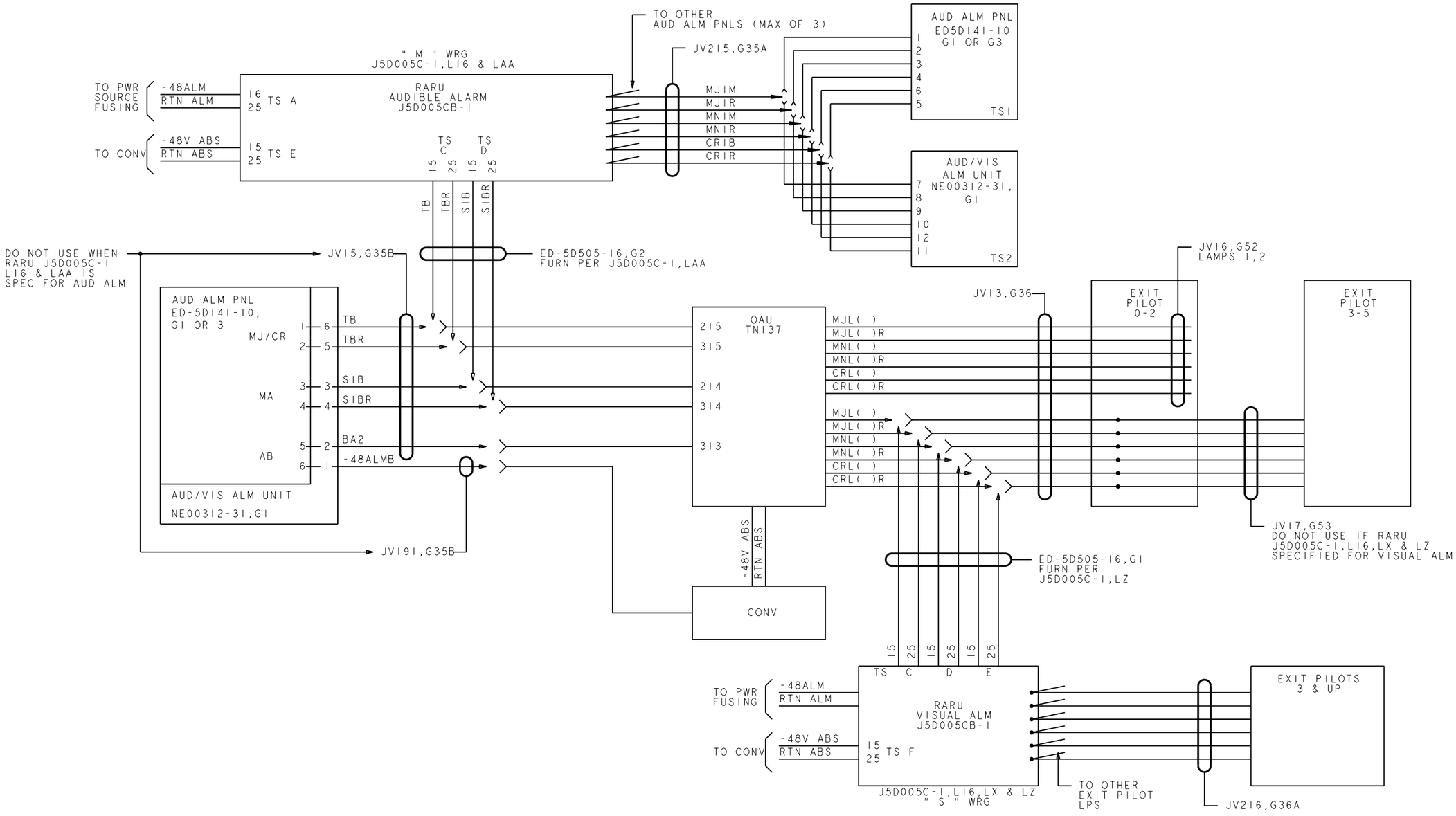

FIG. J1

AUDIBLE & VISUAL ALARM OPTIONAL ARRANGEMENTS
WITH OR WITHOUT RARU J5D005CB-1 PER
J5D005C-1,L16,LX & LZ OR LAA
(REPLD BY J2,J3 & J4)

TITLE: INTERCABINET CABLING				
THIRD ANGLE PROJECTION	LUCENT TECHNOLOGIES - PROPRIETARY USE PURSUANT TO COMPANY INSTRUCTIONS			
Lucent Technologies Inc.	ED5D500-21	SHEET: B18	ISSUE: 112	DWG SIZE: C2/AIR

ED5D500-21

LU.ISSUE2.FRM NOV 1999

NOTE:

G35B JV15,OAU TO AUD PNL OR AUD/VIS ALM UNIT
JV19I CONV TO AUD PNL (ABS)

G36 JV13 OAU TO VIS PNL

G52 JV16 MULT EXIT PILOT LAMPI TO 2ND, 3RD

G53 JV17 MULT EXIT PILOT LAMPI TO 3RD,4TH,5TH

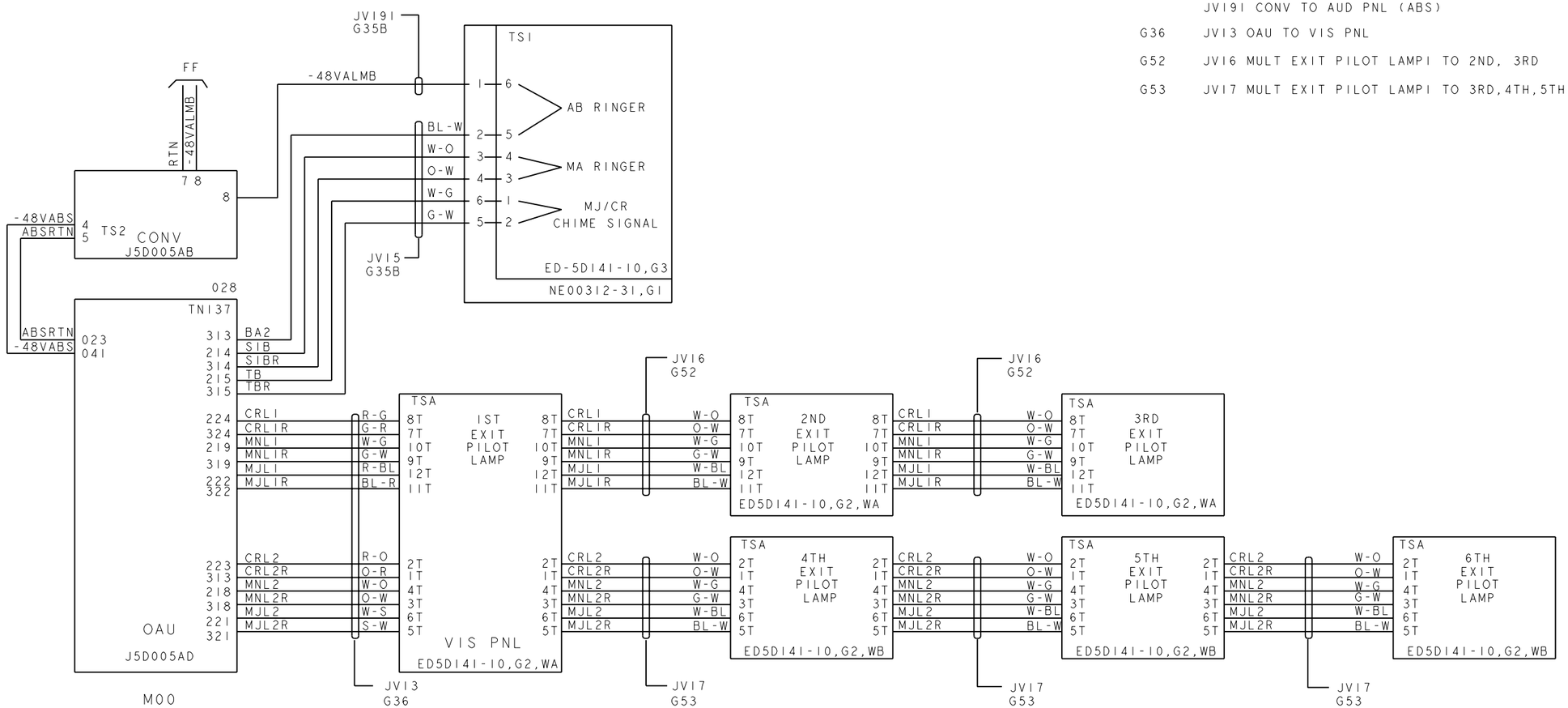

AUDIBLE AND VISUAL ALARMS WHEN RARU (J5D005CB) IS NOT SPECIFIED

J2

TITLE: INTERCABINET CABLING Ⓟ					
THIRD ANGLE PROJECTION	LUCENT TECHNOLOGIES - PROPRIETARY USE PURSUANT TO COMPANY INSTRUCTIONS				
Lucent Technologies Inc.	ED5D500-21	SHEET B19	ISSUE 112	DWG SIZE C2/AIR	

ED5D500-21

LU.ISSUE2.FRM NOV 1999

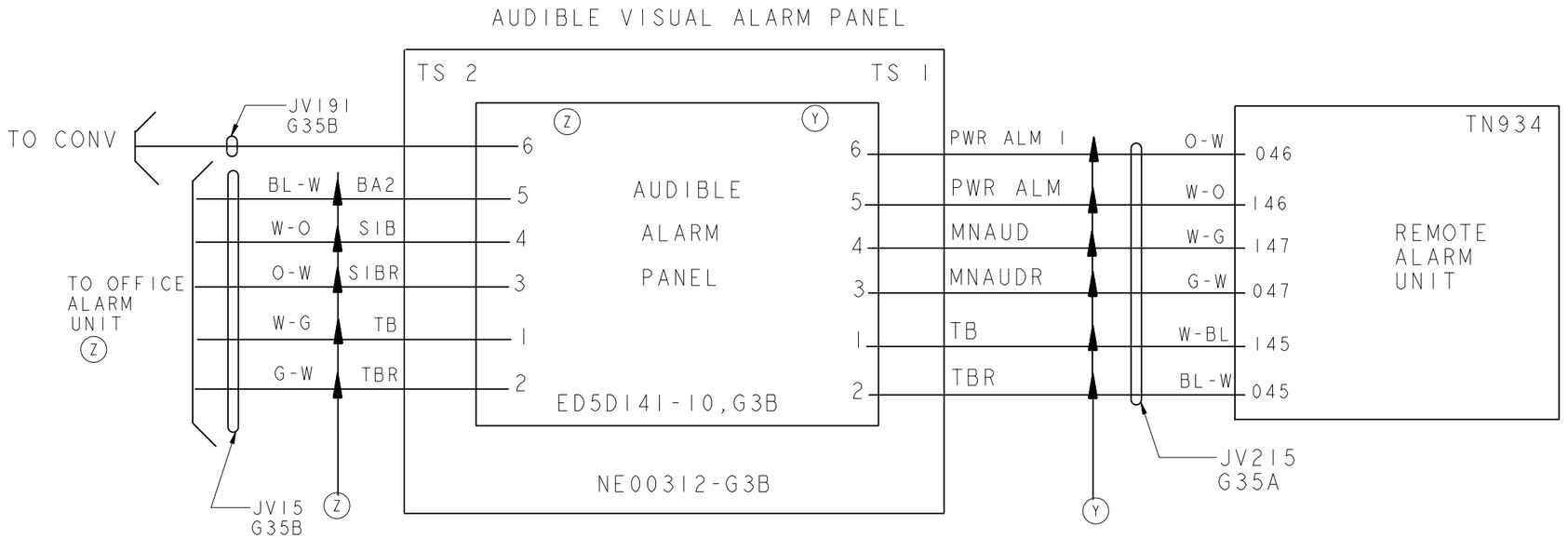

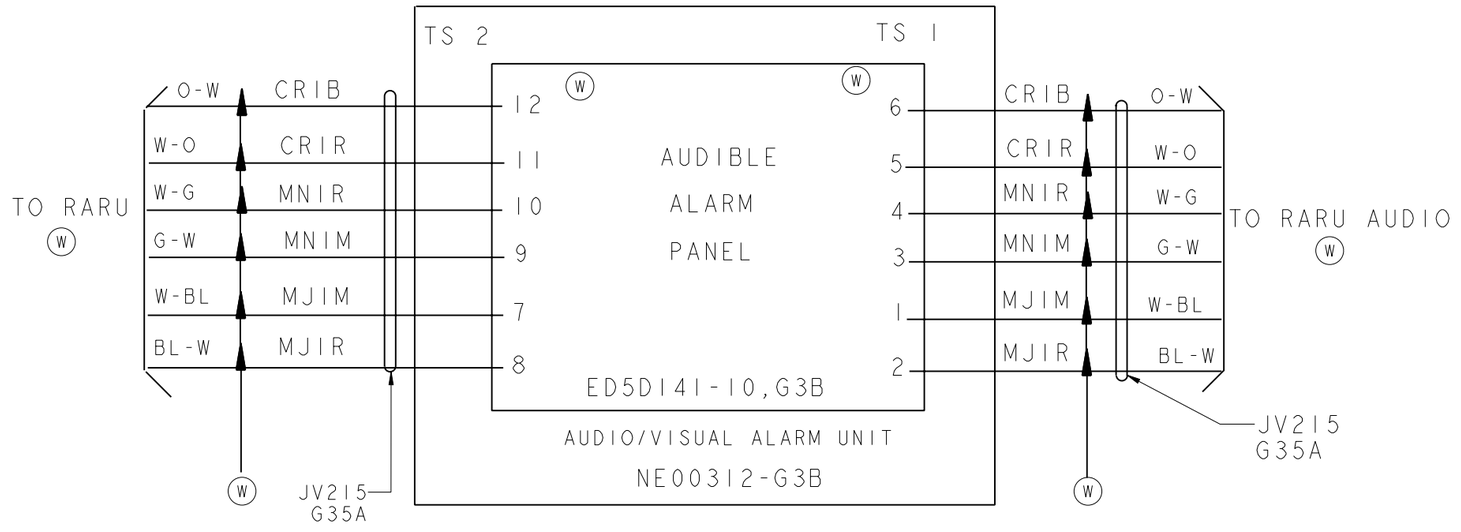

FIG. J2
CONT.

TITLE: INTERCABINET CABLING (P)				
THIRD ANGLE PROJECTION	LUCENT TECHNOLOGIES - PROPRIETARY USE PURSUANT TO COMPANY INSTRUCTIONS			
Lucent Technologies Inc.	ED5D500-21	SHEET B20	ISSUE 112	DWG SIZE C2/AIR

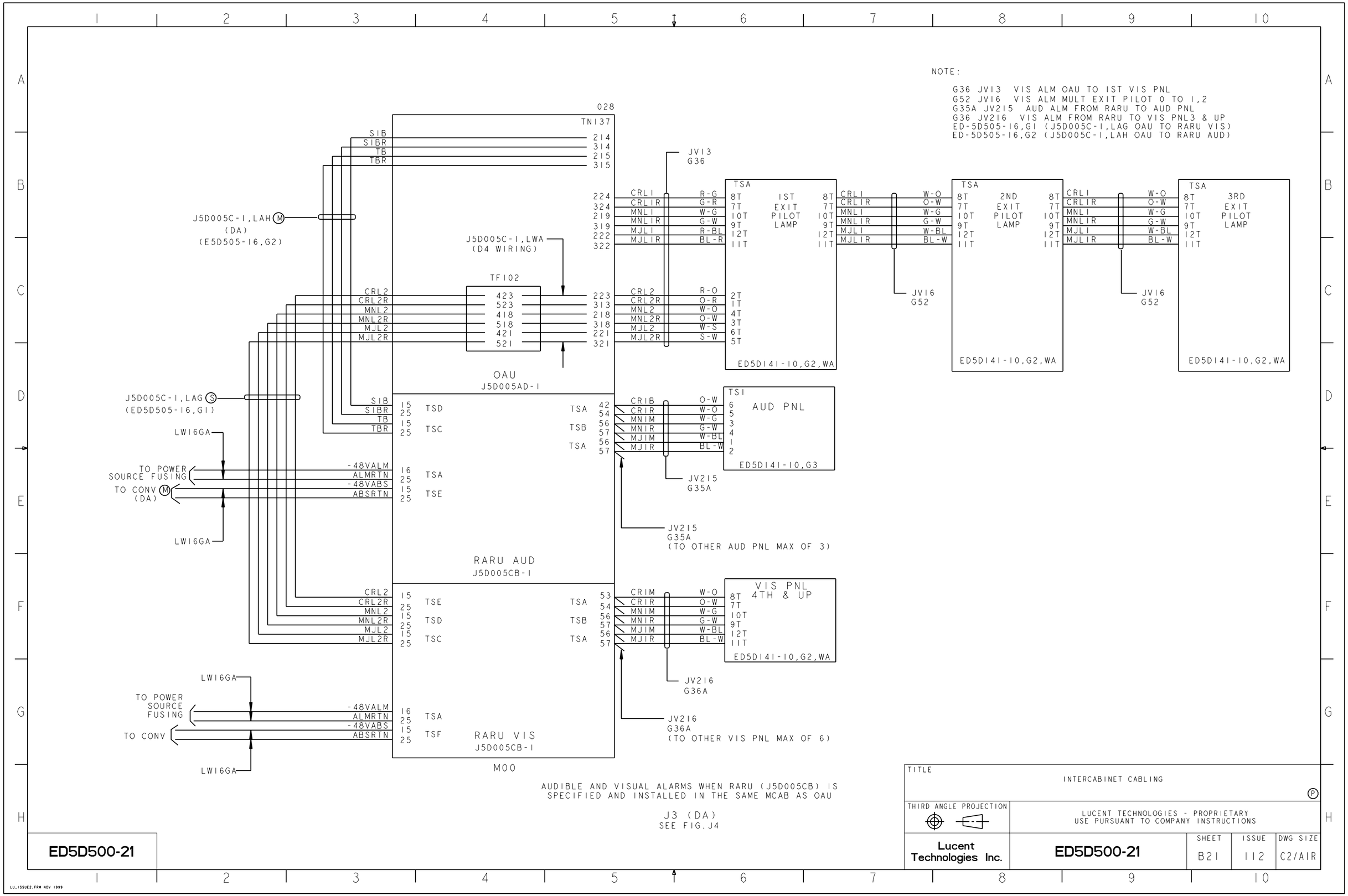
NOTE:
G36 JV13 VIS ALM OAU TO 1ST VIS PNL
G52 JV16 VIS ALM MULT EXIT PILOT 0 TO 1,2
G35A JV215 AUD ALM FROM RARU TO AUD PNL
G36 JV216 VIS ALM FROM RARU TO VIS PNL3 & UP
ED-5D505-16,G1 (J5D005C-1,LAG OAU TO RARU VIS)
ED-5D505-16,G2 (J5D005C-1,LAH OAU TO RARU AUD)
028
TN137
OAU
J5D005AD-1
RARU AUD
J5D005CB-1
RARU VIS
J5D005CB-1
M00
TF102
1ST EXIT PILOT LAMP
2ND EXIT PILOT LAMP
3RD EXIT PILOT LAMP
ED5D141-10,G2,WA
AUD PNL
ED5D141-10,G3
VIS PNL 4TH & UP
ED5D141-10,G2,WA
J5D005C-1,LAH (DA) (E5D505-16,G2)
J5D005C-1,LWA (D4 WIRING)
J5D005C-1,LAG (ED5D505-16,G1)
LW16GA
TO POWER SOURCE FUSING
TO CONV (DA)
TO CONV
JV13 G36
JV16 G52
JV215 G35A
JV216 G36A
JV215 G35A (TO OTHER AUD PNL MAX OF 3)
JV216 G36A (TO OTHER VIS PNL MAX OF 6)
AUDIBLE AND VISUAL ALARMS WHEN RARU (J5D005CB) IS SPECIFIED AND INSTALLED IN THE SAME MCAB AS OAU
J3 (DA) SEE FIG.J4
TITLE
INTERCABINET CABLING
THIRD ANGLE PROJECTION
LUCENT TECHNOLOGIES - PROPRIETARY USE PURSUANT TO COMPANY INSTRUCTIONS
Lucent Technologies Inc.
ED5D500-21
SHEET B21
ISSUE 112
DWG SIZE C2/AIR
ED5D500-21
LU.ISSUE2.FRM NOV 1999

NOTE:

G36 JV13 OAU TO 1ST VIS PNL
G52 JV16 MULT PILOT LAMP 0 TO 1,2
G35C JV217 OAU TO RARU AUD (IN OTHER MCAB)
G36C JV218 OAU TO RARU VIS (IN OTHER MCAB)
G35A JV215 RARU TO AUD PNL (3 MAX)
G36A JV216 RARU TO VIS PNL (6 MAX)
J5D005C-1,LAR ED-5D505-16,G3 OAU TO RARU AUD IN SAME CAB
J5D005C-1,LAG ED-5D505-16,G1 OAU TO RARU VIS IN SAME CAB

J5D005AD-1,LWB
(26GA WIRING)

028
TN137

TF102

001 434
003 534
214 533
314 433
215 532
315 432

-48VABS W-G
ABSRTN G-W
SIB W-O
SIBR O-W
TB W-BL
TBR BL-W

TO PWR SOURCE FUSING

RARU AUD
16 TSA
25
15 TSE TSA 42
25 54
15 TSD TSB 56
25 57
15 TSC TSA 56
25 57

J5D005CB-1,L16

CRIB O-W
CRIR W-O
MNIM W-G
MNIR G-W
MJIM W-BL
MJIR BL-W

AUD ALM PNL
ED5D141-10
G3
6
5
3
4
1
2
TS1

AUD/VIS
ALM UNIT
NE00312-31,
G1
12
11
9
10
7
8
TS2

JV215
G35A

JV215
G35A
(TO OTHER AUD PNL MAX OF 3)

JV217
G35C(WHEN RARU IS IN DIF M CAB THAN OAU)
OR
J5D005C,LAR
ED5D505-16,G3
(WHEN RARU IN SAME M CAB AS OAU)

JV16
G52

JV13
G36

MULT
TO 2ND
AND 3RD

TSA
8T 1ST EXIT PILOT LAMP
7T
10T
9T
12T
11T

W-O 8T
O-W 7T
W-G 10T
G-W 9T
W-BL 12T
BL-W 11T

CRL1 R-G 224
CRL1R G-R 324
MNL1 W-G 219
MNL1R G-W 319
MJL1 R-BL 222
MJL1R BL-R 322

ED5D141-10,G2,WA

MULT
TO 4TH,
5TH,6TH
(WHEN RARU
IS NOT
SPECIFIED)

W-O 2T
O-W 1T
W-G 4T
G-W 3T
W-BL 6T
BL-W 5T

JV17
G53

2T CRL2 R-O 223
1T CRL2R O-R 313
4T MNL2 W-O 218
3T MNL2R O-W 318
6T MJL2 W-S 221
5T MJL2R S-W 321

423
523
418
518
421
521

CRL2 W-G
CRL2R G-W
MNL2 W-BL
MNL2R BL-W
MJL2 W-O
MJL2R O-W

TO PWR SOURCE FUSING

RARU VIS
16 TSA
25
15 TSE TSA 53
25 54
15 TSD TSB 56
25 57
15 TSC TSA 56
25 57

J5D005CB-1,L16

CRI W-O
CRIR O-W
MNI W-G
MNIR G-W
MJI W-BL
MJIR BL-W

TSA
VIS PNL
4TH & UP
8T
7T
10T
9T
12T
11T

ED5D141-10,G2,WA

JV216
G36A

JV216
G36A
(TO OTHER VIS PNL MAX OF 6)

JV218
G36C(WHEN RARU IS IN DIF M CAB THAN OAU)
OR
J5D005C,LAG
ED5D505-16,G1
(WHEN RARU IS IN SAME M CAB AS OAU)

OAU
J5D005AD-1

J5D005C-1,LWA
(26GA WIRING)

J5D005AD-1,LWA
(26GA WIRING)

-48VABS
ABSRTN

CONV
J5D005AB-1

AUDIBLE AND VISUAL ALARMS WHEN RARU (J5D005CB) IS SPECIFIED

J4

ED5D500-21

TITLE: INTERCABINET CABLING					
THIRD ANGLE PROJECTION	LUCENT TECHNOLOGIES - PROPRIETARY USE PURSUANT TO COMPANY INSTRUCTIONS				
Lucent Technologies Inc.	ED5D500-21	SHEET B22	ISSUE 112	DWG SIZE C2/AIR	

LU_ISSUE2.FRM NOV 1999

TABLE KA1									
INTERCABINET COMMUNICATION CIRCUIT									
ED5D500-21 ORDER GROUP	FROM						TO	CABLE ASSEMBLY ED5D505-30 ORDER GROUP	CABLE DESIG
	CABINET	FUSE/ FILTER TYPE	CONN POS 1		POS	DROP LGTH			
			EQL	TERM					
41C,137	STANDARD SMC	AU	()69-044	501	L	1-9 /R/ 7-11 /P/	DF	159	JV159
41C,137	RECONFIGURED SMC	AU	()69-137	501	R		DF	159	JV159
41D	CM2	BJ	()69-044	501	L		DF	159A	JV159A
41D	RECONFIGURED SMC	BT	()69-137	501	R		DF	159A	JV159A

SEE TABLE KA2 FOR CON'T COMM CKT MULT

SEE TABLE KA4 FOR CON'T COMM CKT MULT

TABLE KA3									
INTERCABINET COMMUNICATION CIRCUIT (FOR CABINETS E/W MOD F/F PNL)									
ED5D500-21 ORDER GROUP	FROM						TO	CABLE ASSEMBLY ED5D505-30 ORDER GROUP	CABLE DESIG
	CABINET	FUSE/ FILTER TYPE	CONN POS 1		POS	DROP LGTH			
			EQL	TERM					
41E,137A	STANDARD SM	3FJ (MOD)	()69-109	000	L	1-9 /R/ 7-11 /P/	DF	159B	JV159B
41E	2 SIM'S IN SMC	3FJ (MOD)	()69-141	000	L		DF	159B	JV159B
41E	CM2	3FJ (MOD)	()69-168	000	L		DF	159B	JV159B
41E	RING NODE	3FJ (MOD)	()69-044	000	L		DF	159B	JV159B

M( )
CONV
J5D005AB-1

JV9,G41A POWER FOR START OF MULT

JN11,G62 IN LINE CAB CA 812A
JN7,G58 IN CONSOLE CA A25B

DF

91 CONN BLK ← MCC/TLWS OR STLWS ( ) IN CAB

82B-49 CONN BLK ← MCC/TLWS OR STLWS ( ) IN CONSOLE

JW2,G54

JW3,G54

TAU

SEE ED-5D500-15 OR 16 FOR X CONN INFO AT DF

829A DATA AUX SET

829A DATA AUX SET

DATA SET

DATA SET

3B PROC

JN3,G39 BELTLINE B

JN3,G39 BELTLINE A

SK.K
TYPICAL INTERCABINET COMMUNICATION CIRCUIT

TITLE: INTERCABINET CABLING

THIRD ANGLE PROJECTION

LUCENT TECHNOLOGIES - PROPRIETARY
USE PURSUANT TO COMPANY INSTRUCTIONS

Lucent Technologies Inc.

ED5D500-21

SHEET	ISSUE	DWG SIZE
B23	112	C2/AIR

LU.ISSUE2.FRM NOV 1999

TABLE KA2

INTERCABINET COMMUNICATION CIRCUIT

ED5D500-21 ORDER GROUP	FROM						TO						CABLE ASSEMBLY ED5D505-30 ORDER GROUP	CABLE DESIG
	CABINET	FUSE/ FILTER TYPE	CONN POS 1 EQL	CONN POS 1 TERM	POS	DROP LGTH	CABINET	FUSE/ FILTER TYPE	CONN POS 2 EQL	CONN POS 2 TERM	POS	DROP LGTH		
42A	STANDARD SMC	AU	()69-044	701	L	1-9 /R/ 7-11 /P/	STANDARD SMC	AU	()69-044	501	L	1-9 /R/ 7-11 /P/	161	JV161
42A	STANDARD SMC	AU	()69-044	701	L		RECONFIGURED SMC	AU	()69-137	501	R		161	JV161
42A	RECONFIGURED SMC	AU	()69-137	701	R		STANDARD SMC	AU	()69-044	501	L		161	JV161
42A	RECONFIGURED SMC	AU	()69-137	701	R		RECONFIGURED SMC	AU	()69-137	501	R		161	JV161
42B	CM2	BJ	()69-044	701	L		CM2	BJ	()69-044	501	L		161A	JV161A
42B	RECONFIGURED SMC	BT	()69-137	701	R		RECONFIGURED SMC	BT	()69-137	501	R		161A	JV161A
42B	CM2	BJ	()69-044	701	L		RECONFIGURED SMC	BT	()69-137	501	R		161A	JV161A
42B	RECONFIGURED SMC	BT	()69-137	701	R		CM2	BJ	()69-044	501	L		161A	JV161A
42C	STANDARD SMC	AU	()69-044	701	L		CM2	BJ	()69-044	501	L		161B	JV161B
42C	RECONFIGURED SMC	AU	()69-137	701	R		CM2	BJ	()69-044	501	L		161B	JV161B
42C	STANDARD SMC	AU	()69-044	701	L		RECONFIGURED SMC	BT	()69-137	501	R		161B	JV161B
42C	RECONFIGURED SMC	AU	()69-137	701	R		RECONFIGURED SMC	BT	()69-137	501	R		161B	JV161B
42D	CM2	BJ	()69-044	701	L		STANDARD SMC	AU	()69-044	501	L		161C	JV161C
42D	CM2	BJ	()69-044	701	L		RECONFIGURED SMC	AU	()69-137	501	R		161C	JV161C
42D	RECONFIGURED SMC	BT	()69-137	701	R		STANDARD SMC	AU	()69-044	501	L		161C	JV161C
42D	RECONFIGURED SMC	BT	()69-137	701	R		RECONFIGURED SMC	AU	()69-137	501	R		161C	JV161C

SEE TBL KAI FOR START OF COMM CKT MULT

SK.K (CON'T)

TITLE: INTERCABINET CABLING

THIRD ANGLE PROJECTION

LUCENT TECHNOLOGIES - PROPRIETARY
USE PURSUANT TO COMPANY INSTRUCTIONS

Lucent Technologies Inc.

ED5D500-21

SHEET	ISSUE	DWG SIZE
B24	112	C2/AIR

LU.ISSUE2.FRM NOV 1999

TABLE KA4

INTERCABINET COMMUNICATION CIRCUIT (E/W MODULAR F/F PNL)

FROM						TO					CABLE ASSEMBLY ED5D505-30 ORDER GROUP	CABLE DESIG
ED5D500-21 ORDER GROUP	CABINET	FUSE/ FILTER TYPE	CONN POS 1 EQL	POS	DROP LGTH	CABINET	FUSE/ FILTER TYPE	CONN POS 2 EQL	POS	DROP LGTH		
42E	STD SMC	FJ(MOD)	()69-109-100	L	1-9 /R/ 7-11 /P/	RECNFGR SMC	AU	()69-137-501	R	1-9 /R/ 7-11 /P/	161D	JV161D
42E	CM2	FJ(MOD)	()69-168-100	L		RECNFGR SMC	AU	()69-137-501	R		161D	JV161D
42E	2SM IN SMC	FJ(MOD)	()69-141-100	L		RECNFGR SMC	AU	()69-137-501	R		161D	JV161D
42E	CM2	FJ(MOD)	()69-168-100	L		STD SMC	AU	()69-044-501	L		161D	JV161D
42E	STD SMC	FJ(MOD)	()69-109-100	L		STD SMC	AU	()69-044-501	L		161D	JV161D
42E	2SM IN SMC	FJ(MOD)	()69-141-100	L		STD SMC	AU	()69-044-501	L		161D	JV161D
42F	STD SMC	FJ(MOD)	()69-109-100	L		CM2	BJ	()69-044-501	L		161E	JV161E
42F	STD SMC	FJ(MOD)	()69-109-100	L		RECNFGR SMC	BT	()69-137-501	R		161E	JV161E
42F	CM2	FJ(MOD)	()69-168-100	L		CM2	BJ	()69-044-501	L		161E	JV161E
42F	CM2	FJ(MOD)	()69-168-100	L		RECNFGR SMC	BT	()69-137-501	R		161E	JV161E
42F	2SM IN SMC	FJ(MOD)	()69-141-100	L		CM2	BJ	()69-044-501	L		161E	JV161E
42F	2SM IN SMC	FJ(MOD)	()69-141-100	L		RECNFGR SMC	BT	()69-137-501	R		161E	JV161E
42G	RECNFGR SMC	AU	()69-137-701	R		STD SMC	FJ(MOD)	()69-109-000	L		161F	JV161F
42G	RECNFGR SMC	AU	()69-137-701	R		CM2	FJ(MOD)	()69-168-000	L		161F	JV161F
42G	RECNFGR SMC	AU	()69-137-701	R		2SM IN SMC	FJ(MOD)	()69-141-000	L		161F	JV161F
42G	STD SMC	AU	()69-044-701	L		STD SMC	FJ(MOD)	()69-109-000	L		161F	JV161F
42G	STD SMC	AU	()69-044-701	L		CM2	FJ(MOD)	()69-168-000	L		161F	JV161F
42G	STD SMC	AU	()69-044-701	L		2SM IN SMC	FJ(MOD)	()69-141-000	L		161F	JV161F
42H	CM2	BJ	()69-044-701	L		STD SMC	FJ(MOD)	()69-109-000	L		161G	JV161G
42H	RECNFGR SMC	BT	()69-137-701	R		STD SMC	FJ(MOD)	()69-109-000	L		161G	JV161G
42H	CM2	BJ	()69-044-701	L		STD SMC	FJ(MOD)	()69-109-000	L		161G	JV161G
42H	RECFGR SMC	BT	()69-137-701	R		CM2	FJ(MOD)	()69-168-000	L		161G	JV161G
42H	CM2	BJ	()69-044-701	L		2SM IN SMC	FJ(MOD)	()69-141-000	L		161G	JV161G
42H	RECNFGR SMC	BT	()69-137-701	R		2SM IN SMC	FJ(MOD)	()69-141-000	L		161G	JV161G
42J	STD SMC	FJ(MOD)	()69-109-100	L		STD SMC	FJ(MOD)	()69-109-000	L		161H	JV161H
42J	STD SMC	FJ(MOD)	()69-109-100	L		CM2	FJ(MOD)	()69-168-000	L		161H	JV161H
42J	STD SMC	FJ(MOD)	()69-109-100	L		2SM IN SMC	FJ(MOD)	()69-141-000	L		161H	JV161H
42J	CM2	FJ(MOD)	()69-168-100	L		CM2	FJ(MOD)	()69-168-000	L		161H	JV161H
42J	CM2	FJ(MOD)	()69-168-100	L		2SM IN SMC	FJ(MOD)	()69-141-000	L		161H	JV161H
42J	CM2	FJ(MOD)	()69-168-100	L		STD SMC	FJ(MOD)	()69-109-000	L		161H	JV161H
42J	2SM IN SMC	FJ(MOD)	()69-141-100	L		2SM IN SMC	FJ(MOD)	()69-141-000	L		161H	JV161H
42J	2SM IN SMC	FJ(MOD)	()69-141-100	L		CM2	FJ(MOD)	()69-168-000	L		161H	JV161H
42J	2SM IN SMC	FJ(MOD)	()69-141-100	L		STD SMC	FJ(MOD)	()69-109-000	L		161H	JV161H
42J	DNU-S IN LTP LOCATED IN TRANSMISSION AREA(OUTSIDE 5E FT PRINT)	FJ(MOD)	()69-091-100	L		2SM IN SMC	FJ(MOD)	()69-141-000	L		161H	JV161H
42J		FJ(MOD)	()69-091-100	L		CM2	FJ(MOD)	()69-168-000	L		161H	JV161H
42J		FJ(MOD)	()69-091-100	L		STD SMC	FJ(MOD)	()69-109-000	L		161H	JV161H

SEE TBL KA3 FOR START OF COMM CKT MULT

SK.K (CON'T)

TITLE: INTERCABINET CABLING

THIRD ANGLE PROJECTION

LUCENT TECHNOLOGIES - PROPRIETARY
USE PURSUANT TO COMPANY INSTRUCTIONS

Lucent Technologies Inc.

ED5D500-21

SHEET	ISSUE	DWG SIZE
B25	112	C2/AIR

LU.ISSUE2.FRM NOV 1999

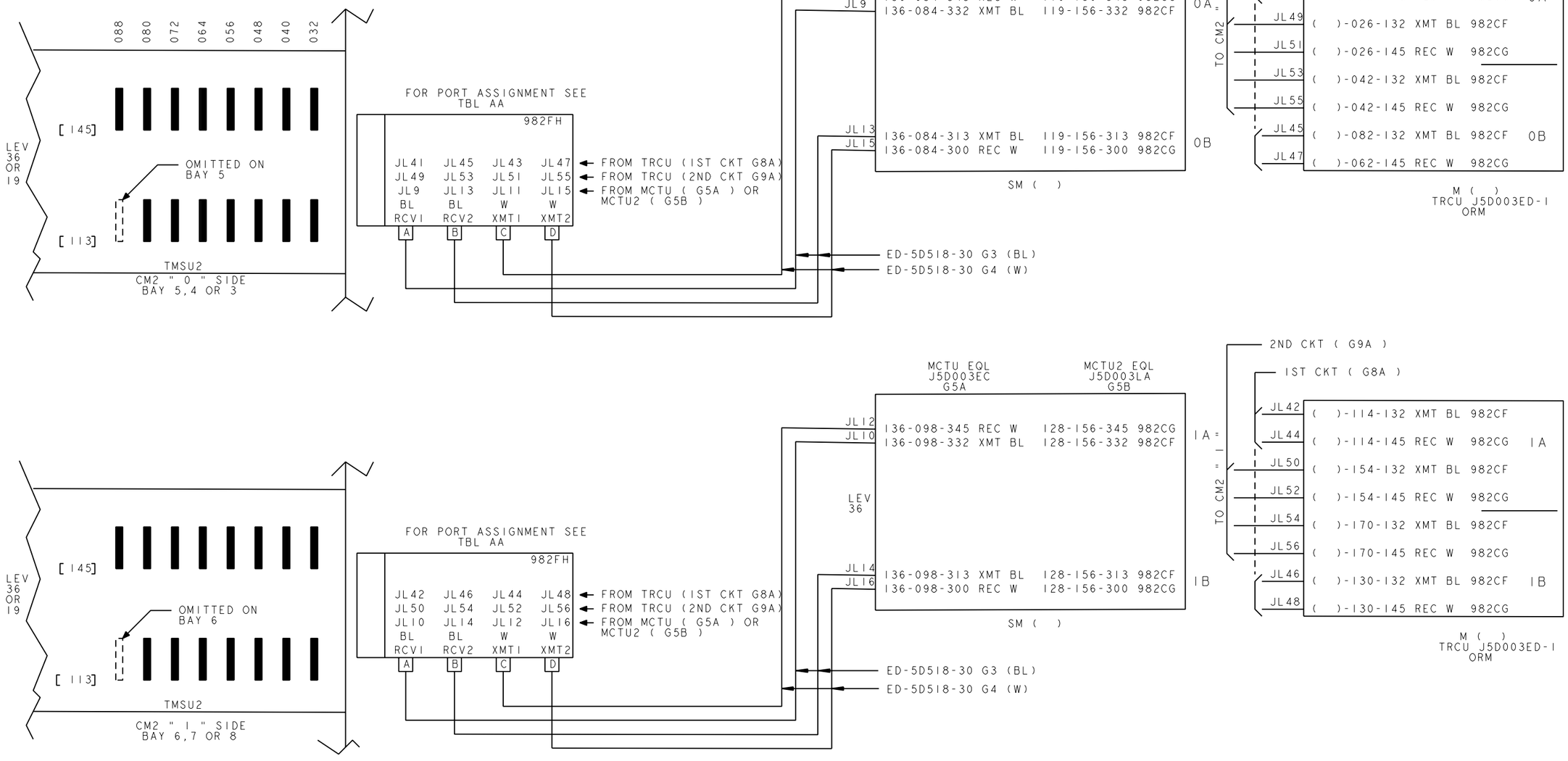

FIG. M2

ODL 40 NCT LINKS TO CM2
SINGLE FABRIC
WHEN SMC IS E/W MCTU OR MCTU2 OR
ORM TRCU J5D003ED-1

TITLE: INTERCABINET CABLING

THIRD ANGLE PROJECTION

LUCENT TECHNOLOGIES - PROPRIETARY
USE PURSUANT TO COMPANY INSTRUCTIONS

Lucent Technologies Inc.

ED5D500-21

SHEET	ISSUE	DWG SIZE
B26	112	C2/AIR

ED5D500-21

LU.ISSUE2.FRM NOV 1999

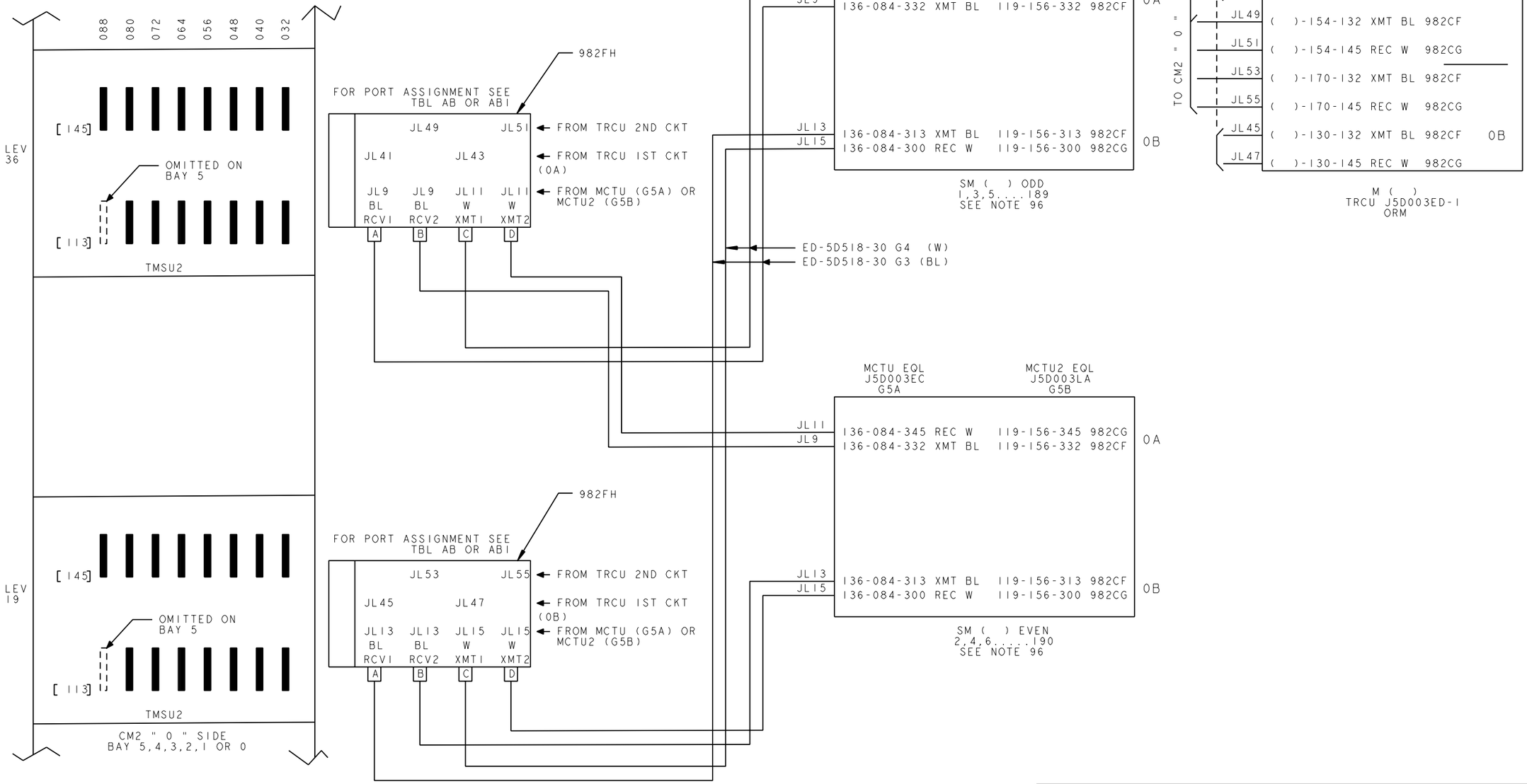

FIG. M3
ODL 40 NCT LINKS TO CM2 " 0 " SIDE
DUAL FABRIC
WHEN SMC IS E/W MCTU OR MCTU2
OR
ORM TRCU J5D003ED-1

TITLE: INTERCABINET CABLING					
THIRD ANGLE PROJECTION	LUCENT TECHNOLOGIES - PROPRIETARY USE PURSUANT TO COMPANY INSTRUCTIONS				
Lucent Technologies Inc.	ED5D500-21	SHEET B27	ISSUE 112	DWG SIZE C2/AIR	

ED5D500-21

LU_ISSUE2.FRM NOV 1999

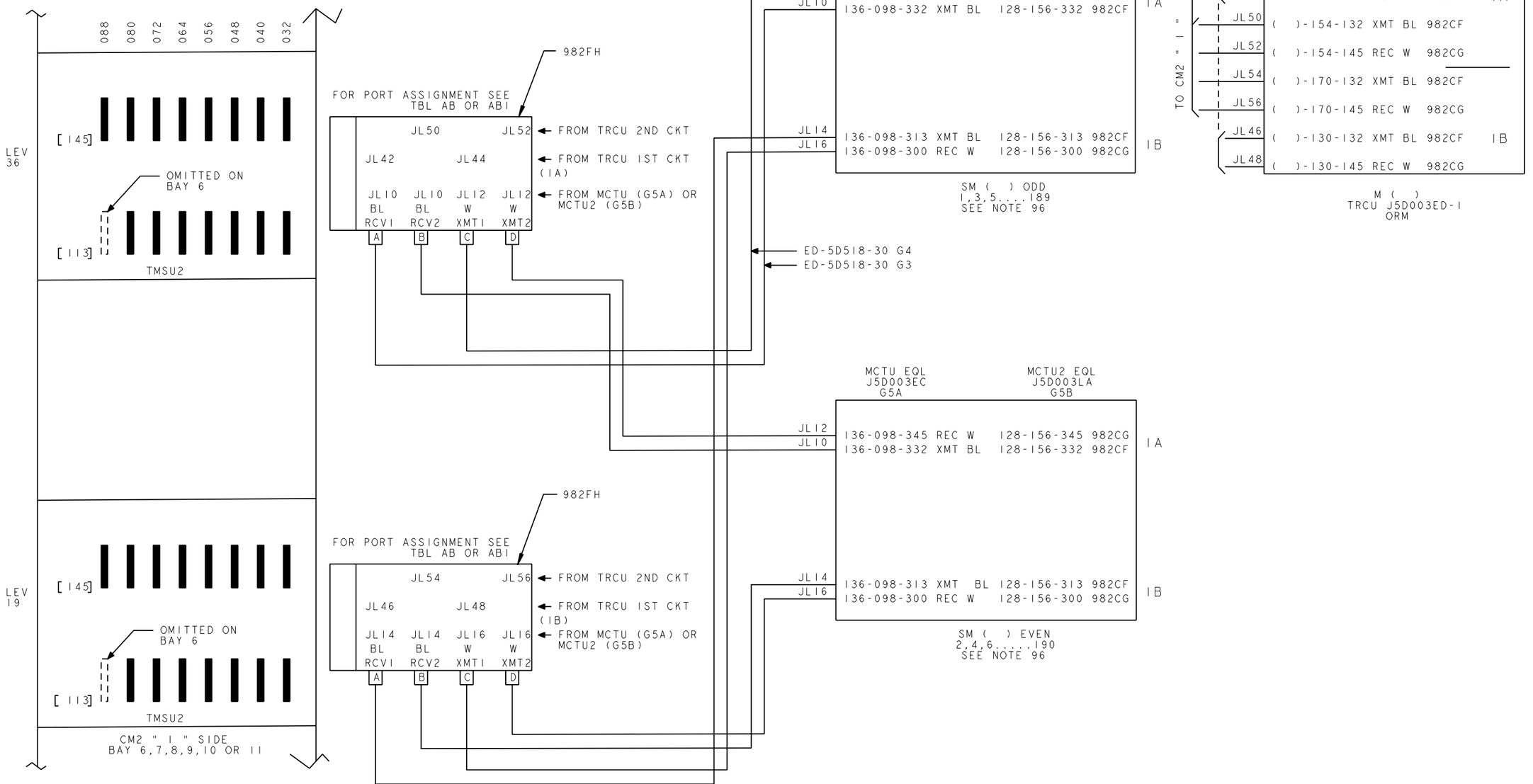

FIG. M3 CONT.
ODL 40 NCT LINKS TO CM2 " 1 " SIDE
DUAL FABRIC
WHEN SMC IS E/W MCTU OR MCTU2
OR
ORM TRCU J5D003ED-1

TITLE: INTERCABINET CABLING				
THIRD ANGLE PROJECTION	LUCENT TECHNOLOGIES - PROPRIETARY USE PURSUANT TO COMPANY INSTRUCTIONS			
Lucent Technologies Inc.	ED5D500-21	SHEET B28	ISSUE 112	DWG SIZE C2/AIR

ED5D500-21

LU.ISSUE2.FRM NOV 1999

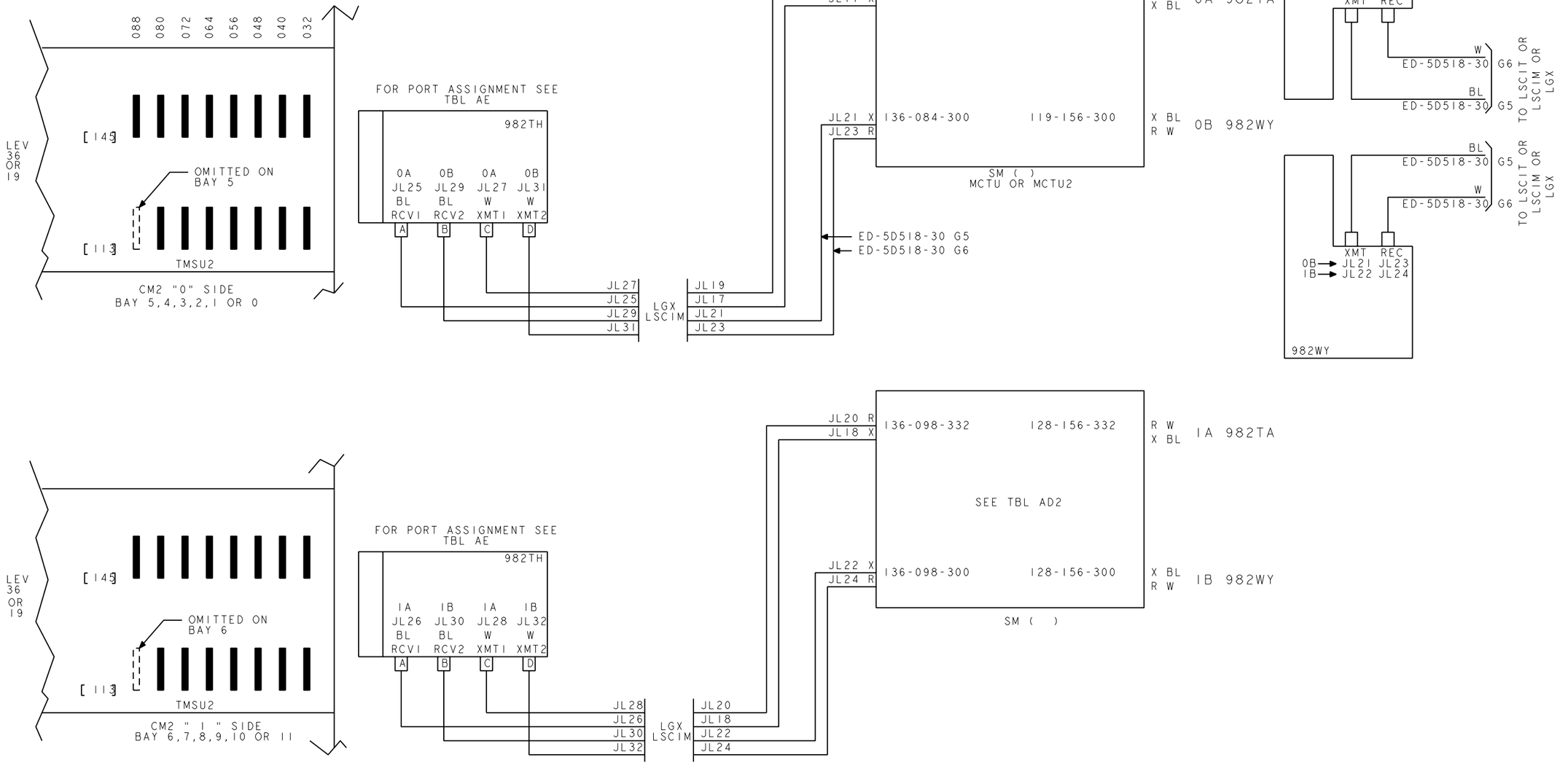

FIG. M4

TRM NCT LINKS TO CM2 (ODL 40)
SINGLE FABRIC
WHEN SMC IS E/W MCTU OR MCTU2

TITLE: INTERCABINET CABLING					
THIRD ANGLE PROJECTION	LUCENT TECHNOLOGIES - PROPRIETARY USE PURSUANT TO COMPANY INSTRUCTIONS				
Lucent Technologies Inc.	ED5D500-21	SHEET B29	ISSUE 112	DWG SIZE C2/AIR	

ED5D500-21

LU.ISSUE2.FRM NOV 1999

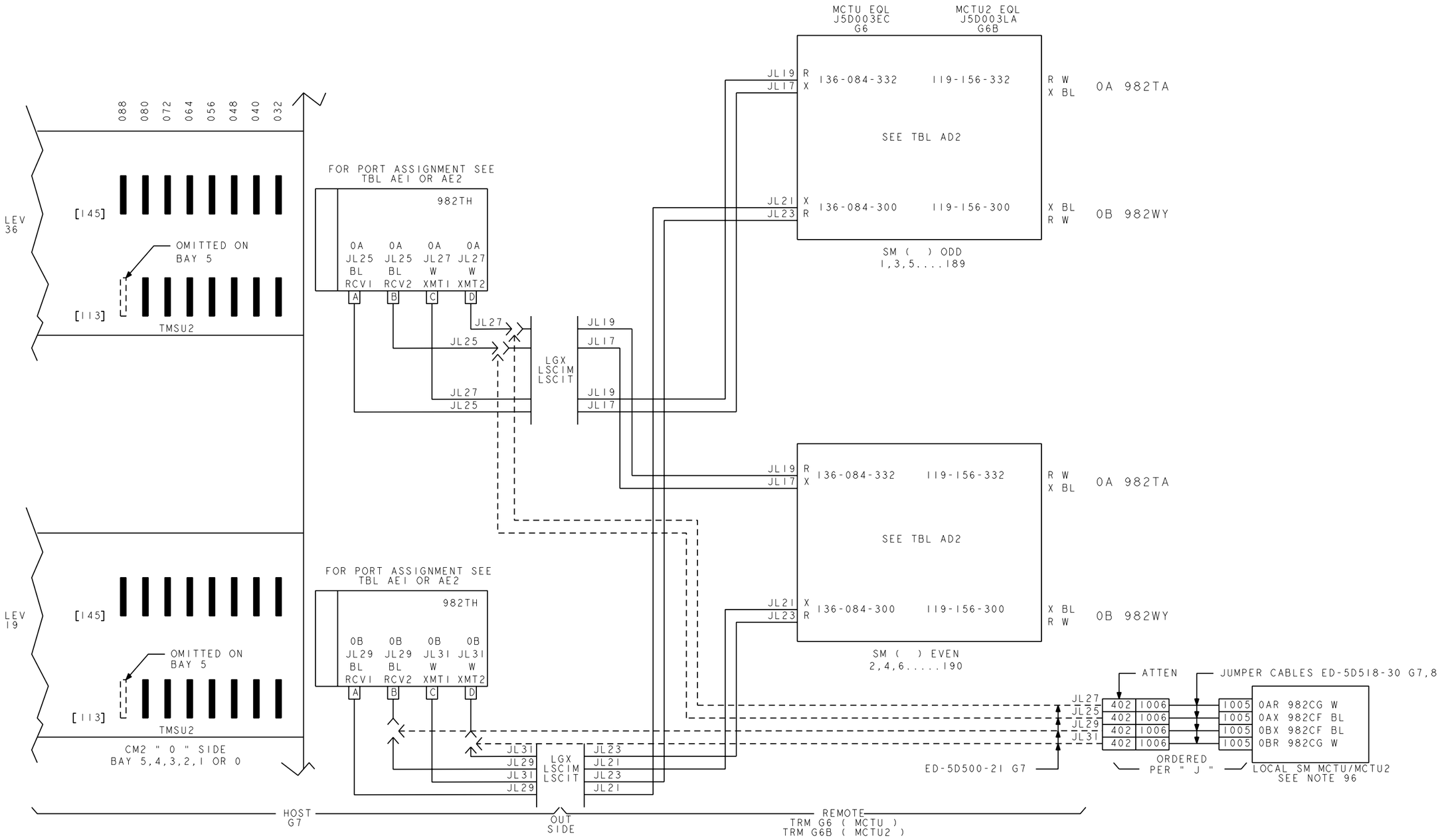

FIG. M5

TRM NCT LINKS TO CM2 " 0 " SIDE (ODL 40)
DUAL FABRIC
WHEN SMC IS E/W MCTU OR MCTU2

TITLE: INTERCABINET CABLING Ⓟ					
THIRD ANGLE PROJECTION	LUCENT TECHNOLOGIES - PROPRIETARY USE PURSUANT TO COMPANY INSTRUCTIONS				
Lucent Technologies Inc.	ED5D500-21	SHEET B30	ISSUE 112	DWG SIZE C2/AIR	

ED5D500-21

LU_ISSUE2.FRM NOV 1999

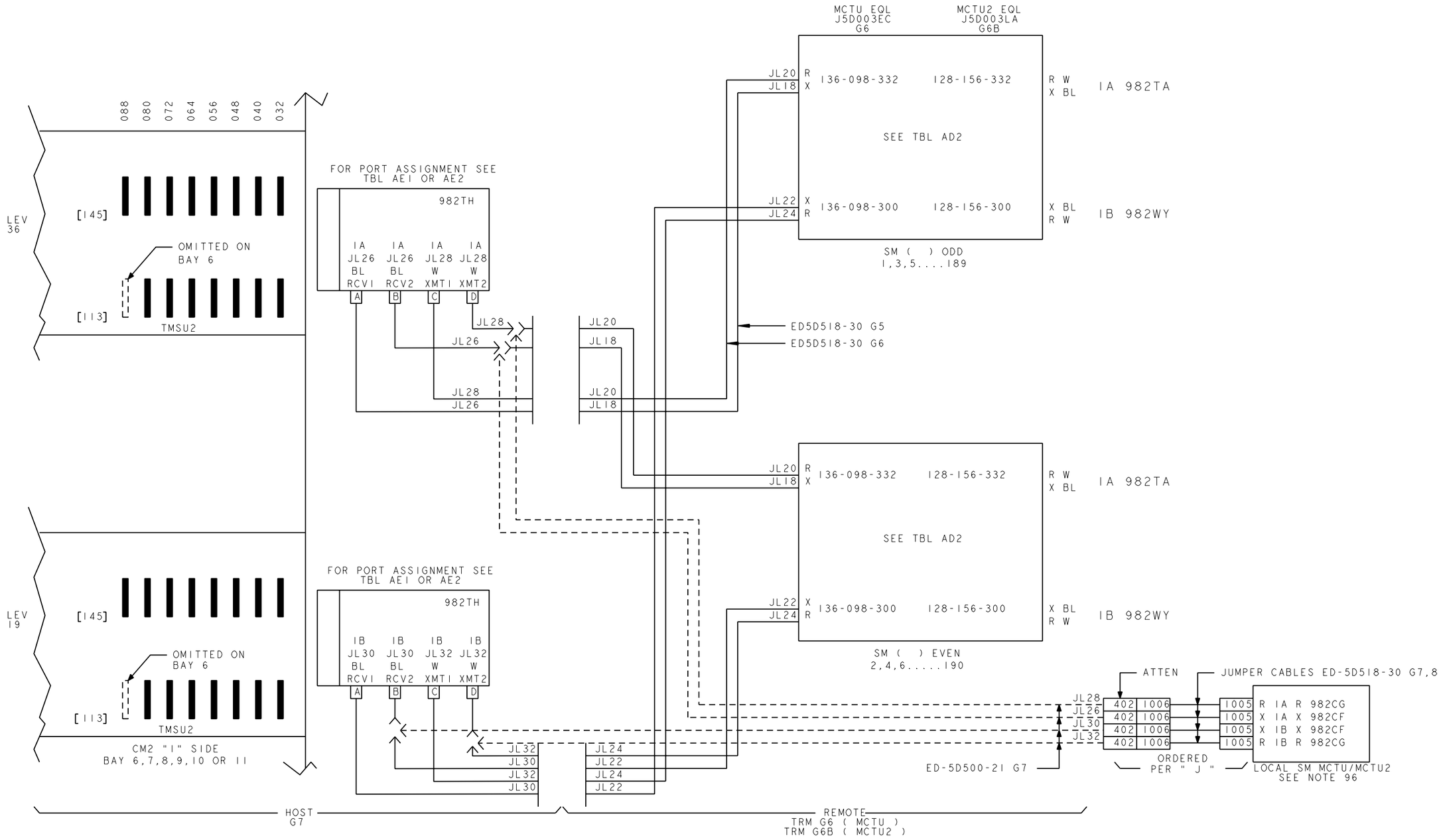

FIG. M5 CONT.

TRM NCT LINKS TO CM2 " 1 " SIDE (ODL 40)
DUAL FABRIC
WHEN SMC IS E/W MCTU OR MCTU2

TITLE: INTERCABINET CABLING					
THIRD ANGLE PROJECTION	LUCENT TECHNOLOGIES - PROPRIETARY USE PURSUANT TO COMPANY INSTRUCTIONS				
Lucent Technologies Inc.	ED5D500-21	SHEET B31	ISSUE 112	DWG SIZE C2/AIR	

ED5D500-21

LU_ISSUE2.FRM NOV 1999

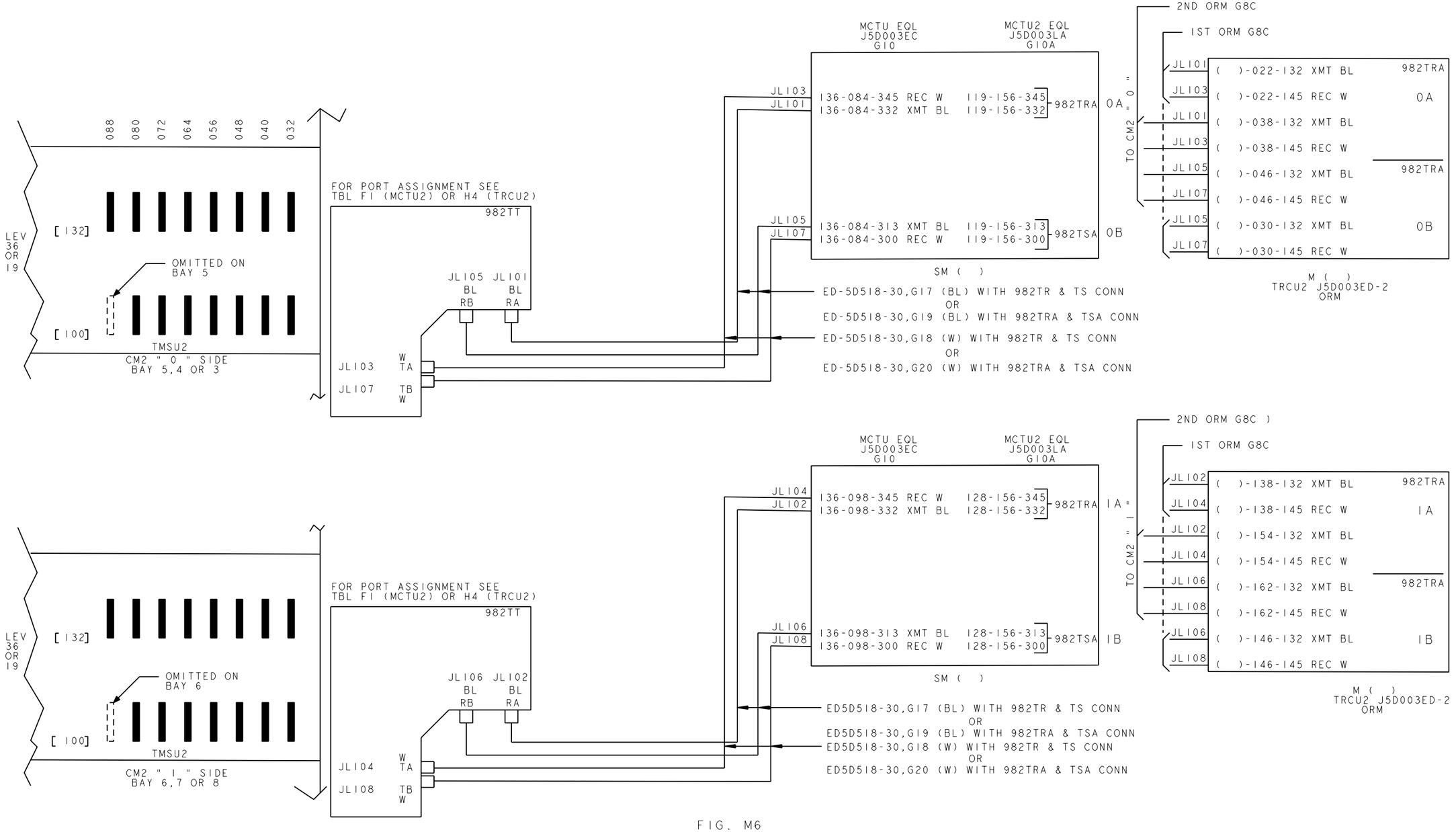

FIG. M6

ODL 50 NCT LINKS TO CM2
SINGLE FABRIC
WHEN SMC IS E/W MCTU OR
MCTU2 OR
ORM TRCU2 J5D003ED-2

TITLE: INTERCABINET CABLING				
THIRD ANGLE PROJECTION	LUCENT TECHNOLOGIES - PROPRIETARY USE PURSUANT TO COMPANY INSTRUCTIONS			
Lucent Technologies Inc.	ED5D500-21	SHEET B32	ISSUE 112	DWG SIZE C2/AIR

ED5D500-21

LU.ISSUE2.FRM NOV 1999

088 080 072 064 056 048 040 032

LEV 36

[132]

OMITTED ON BAY 5

[100]

TMSU2

LEV 19

[132]

OMITTED ON BAY 5

[100]

TMSU2

CM2 " 0 " SIDE
BAY 5,4,3,2,1 OR 0

FOR PORT ASSIGNMENT SEE
TBL F2,F3 (MCTU2) OR H5,H6 (TRCU2)

982TT

(0A)

JL101 BL RB

JL101 BL RA

JL103 W TA

JL103 W TB

FOR PORT ASSIGNMENT SEE
TBL F2,F3 (MCTU2) OR H5,H6 (TRCU2)

982TT

(0B)

JL105 BL RB

JL105 BL RA

JL107 W TA

JL107 W TB

MCTU EQL J5D003EC G10

MCTU2 EQL J5D003LA G10A

JL103 136-084-345 REC W 119-156-345

JL101 136-084-332 XMT BL 119-156-332

982TRA 0A

JL105 136-084-313 XMT BL 119-156-313

JL107 136-084-300 REC W 119-156-300

982TSA 0B

SM ( ) ODD
1,3,5....189
SEE NOTE 96

ED-5D518-30,G17 (BL) WITH 982TR & TS CONN
OR
ED-5D518-30,G19 (BL) WITH 982TRA & TSA CONN

ED-5D518-30,G18 (W) WITH 982TR & TS CONN
OR
ED-5D518-30,G20 (W) WITH 982TRA & TSA CONN

MCTU EQL J5D003EC G10

MCTU2 EQL J5D003LA G10A

JL103 136-084-345 REC W 119-156-345

JL101 136-084-332 XMT BL 119-156-332

982TRA 0A

JL105 136-084-313 XMT BL 119-156-313

JL107 136-084-300 REC W 119-156-300

982TSA 0B

SM ( ) EVEN
2,4,6....190
SEE NOTE 96

ED5D518-30,G17(BL) WITH 982TR & TS CONN
OR
ED5D518-30,G19(BL) WITH 982TRA & TSA CONN

ED5D518-30,G18(W) WITH 982TR & TS CONN
OR
ED5D518-30,G20(W) WITH 982TRA & TSA CONN

1ST ORM G8C (ODD OR EVEN)

TO CM2 " 0 "

JL101 ( )-022-132 XMT BL 982TRA

JL103 ( )-022-145 REC W 0A

982TRA

JL105 ( )-030-132 XMT BL 0B

JL107 ( )-030-145 REC W

M ( )
TRCU2 J5D003ED-2
ORM

2ND ORM G8C (ODD OR EVEN)

TO CM2 " 0 "

982TRA

0A

JL101 ( )-038-132 XMT BL

JL103 ( )-038-145 REC W

JL105 ( )-046-132 XMT BL 982TRA

JL107 ( )-046-145 REC W

0B

M ( )
TRCU2 J5D003ED-2
ORM

FIG. M7
ODL 50 NCT LINKS TO CM2 " 0 " SIDE
DUAL FABRIC
WHEN SMC IS E/W MCTU OR MCTU2
OR
ORM TRCU2 J5D003ED-2

TITLE
INTERCABINET CABLING

THIRD ANGLE PROJECTION

LUCENT TECHNOLOGIES - PROPRIETARY
USE PURSUANT TO COMPANY INSTRUCTIONS

Lucent Technologies Inc.

ED5D500-21

SHEET	ISSUE	DWG SIZE
B33	112	C2/AIR

ED5D500-21

LU.ISSUE2.FRM NOV 1999

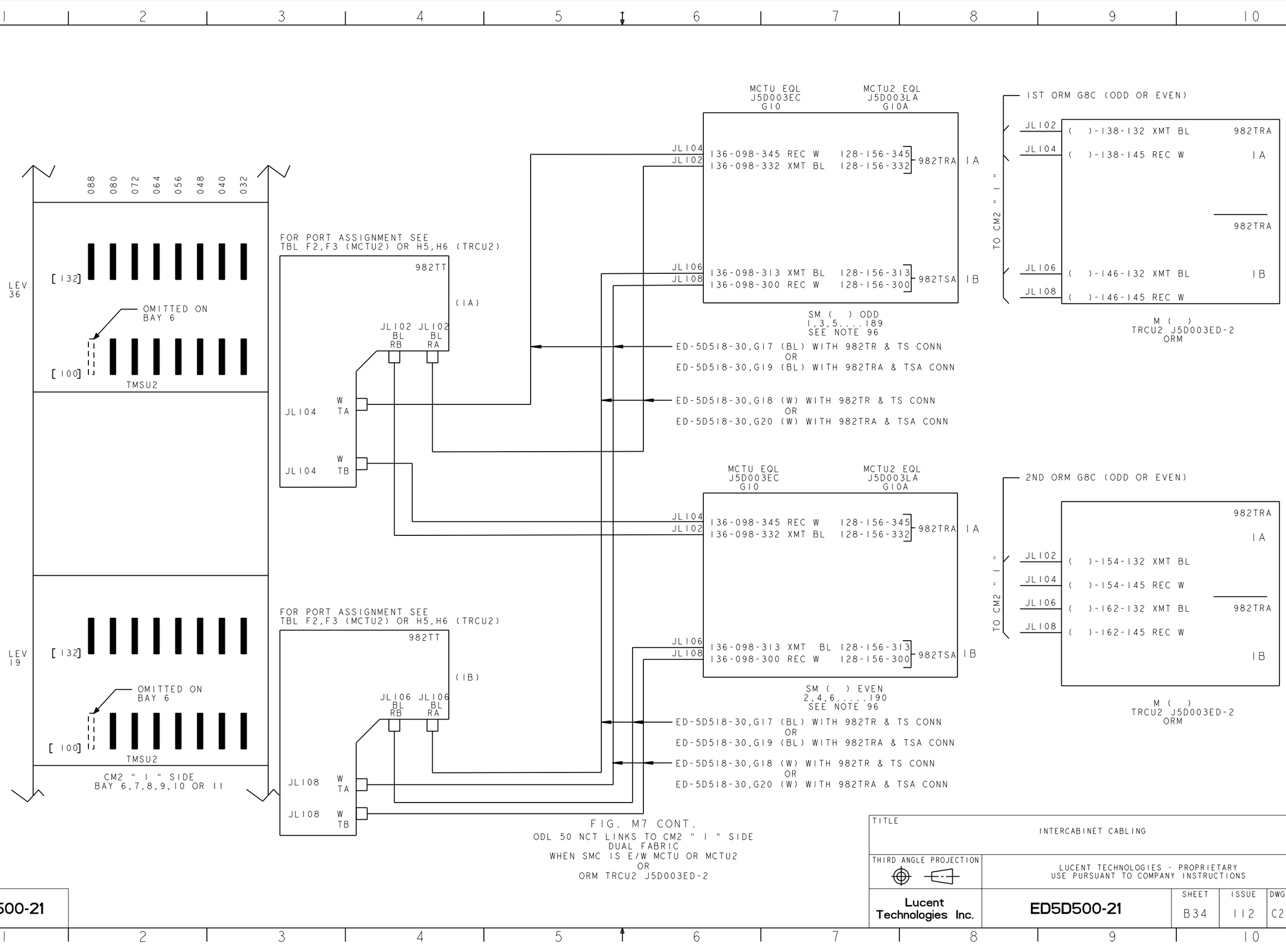

FIG. M7 CONT.
ODL 50 NCT LINKS TO CM2 " I " SIDE
DUAL FABRIC
WHEN SMC IS E/W MCTU OR MCTU2
OR
ORM TRCU2 J5D003ED-2

TITLE: INTERCABINET CABLING

THIRD ANGLE PROJECTION

LUCENT TECHNOLOGIES - PROPRIETARY
USE PURSUANT TO COMPANY INSTRUCTIONS

Lucent Technologies Inc.

ED5D500-21

SHEET	ISSUE	DWG SIZE
B34	112	C2/AIR

LU.ISSUE2.FRM NOV 1999

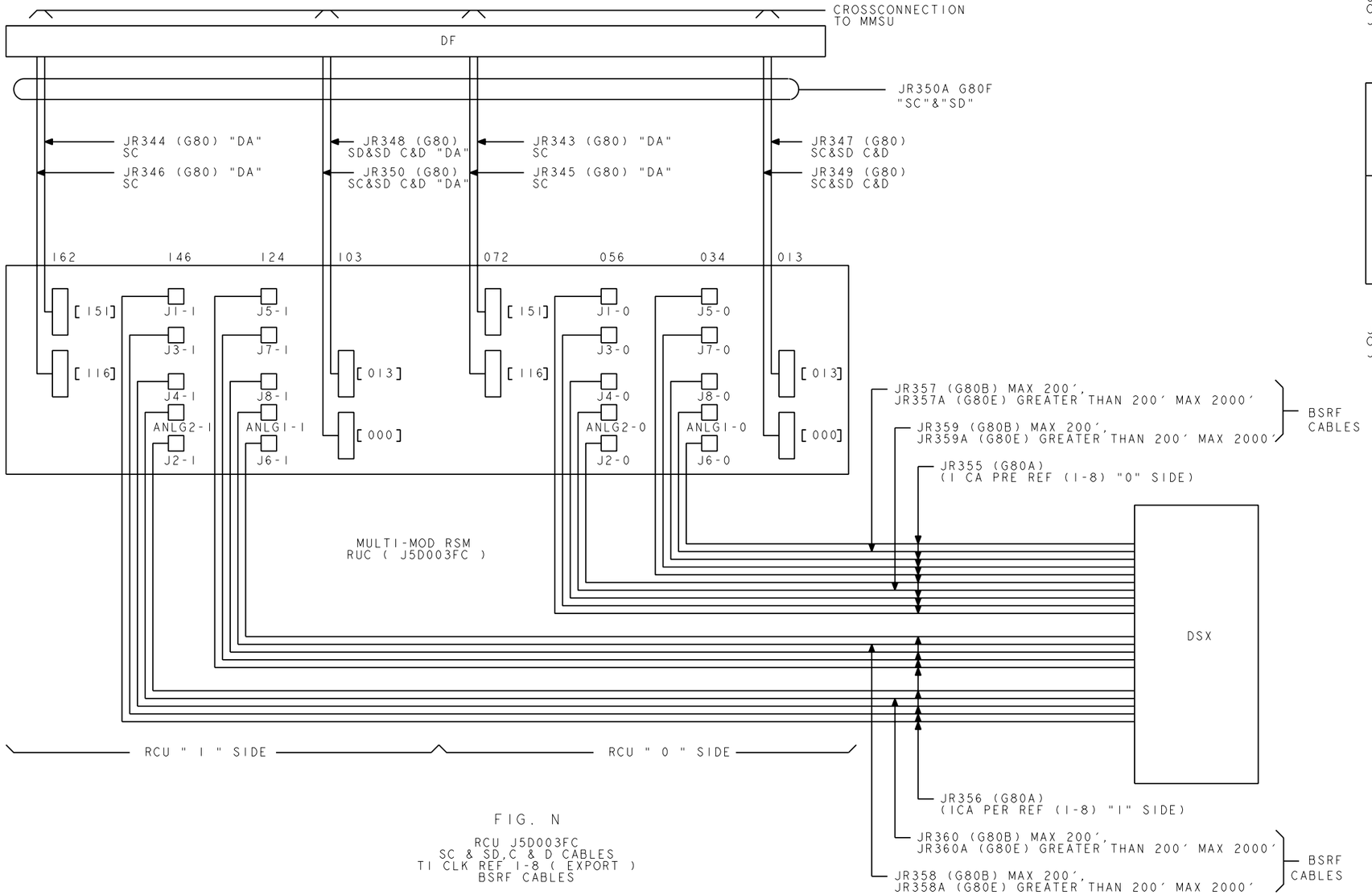

FIG. N

RCU J5D003FC
SC & SD,C & D CABLES
TI CLK REF 1-8 (EXPORT)
BSRF CABLES

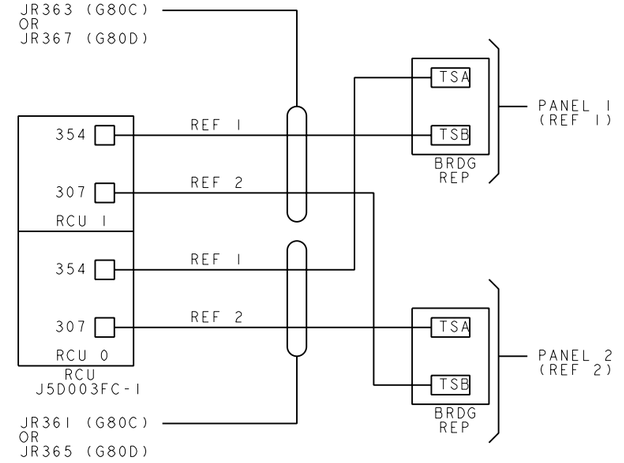

FIG. N CONT

TI CLOCK REF 1 & 2 CABLES
FOR DOMESTIC APPLICATION

TITLE: INTERCABINET CABLING Ⓟ				
THIRD ANGLE PROJECTION	LUCENT TECHNOLOGIES - PROPRIETARY USE PURSUANT TO COMPANY INSTRUCTIONS			
Lucent Technologies Inc.	ED5D500-21	SHEET B35	ISSUE 112	DWG SIZE C2/AIR

ED5D500-21

LU.ISSUE2.FRM NOV 1999

NOTE :
MMRSM,ORM TRM WITHOUT AUDIBLE ALARM PANEL

LIST OF ORDERING GROUPS

IST SM G190 (SC & SD) CA JF1
G191 (ABS,RTN) CA JF2

SM G193 (ABS,RTN) CA JF9
(2ND THRU 4TH)

PCDF/GPDF G198 (1 SC PT) CA JV198

M CAB
F/F G200 (2 SC PTS) CA JV200
(WITH OPTO-ISOLATOR 982SC)

M CAB
F/F G210 (1 SC PTS) CA JV207
(WITH OPTO-ISOLATOR 982SC)

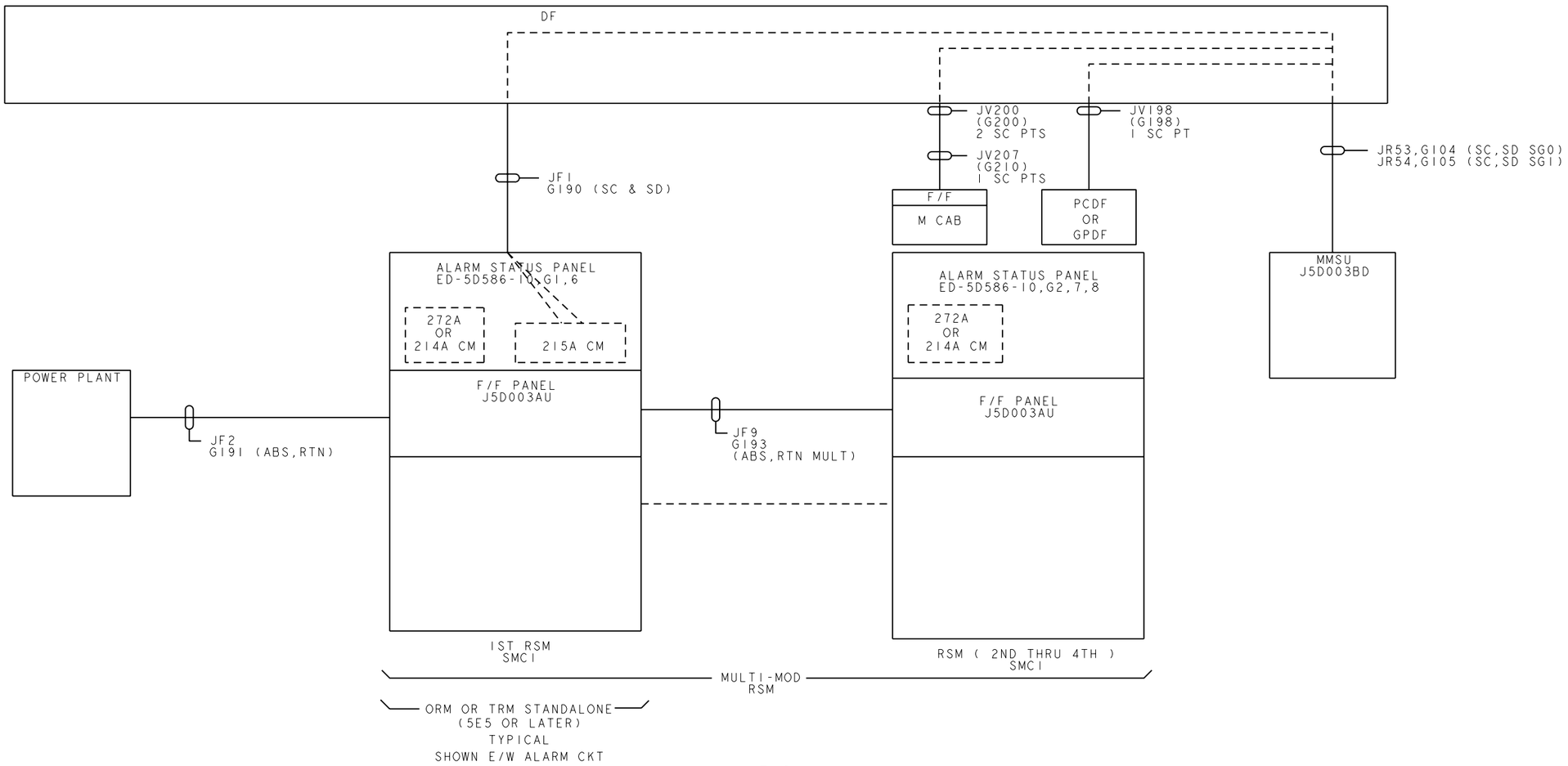

FIG.N1

ALARM NETWORK CABLING FOR MMRSM OR FIRST ORM OR TRM
OF A CO-LOCATED SITE
(ALARM STATUS PANEL ED-5D586-10)
WHEN AUDIBLE ALM PNL IS NOT SPEC.

TITLE: INTERCABINET CABLING					
THIRD ANGLE PROJECTION	LUCENT TECHNOLOGIES - PROPRIETARY USE PURSUANT TO COMPANY INSTRUCTIONS				
Lucent Technologies Inc.	ED5D500-21	SHEET B36	ISSUE 112	DWG SIZE C2/AIR	

ED5D500-21

LU.ISSUE2.FRM NOV 1999

NOTE:
MMRSM ,ORM OR TRM E/W AUDIBLE ALARM PANEL

LIST OF ORDERING GROUPS
IST SM G190 (SC & SD) CA JF1
G192 & 192A (ABS,RTN) CA JF4 & JF5
G194A (SD) CA JF3
G194(FUSE FOR RINGER) CA JF6
G195 (EXIT PILOT LAMP) CA JF8
G196(FUSE FOR ADDNL ALARM EQUIPMENT REQUIRING -48V) CA JF7
SM (2ND THRU 4TH) G193 (ABS,RTN) CA JF9
PCDF/GPDF G198 (1 SC PT) CA JV198
M CAB F/F G200 (2 SC PTS) CA JV200 (WITH OPTO-ISOLATOR 982SC)
M CAB F/F G210 (1 SC PTS) CA JV207 (WITH OPTO-ISOLATOR 982SC)

FIG.N2

ALARM NETWORK CABLING FOR MMRSM OR FIRST ORM OR TRM OF A CO-LOCATED SITE (ALARM STATUS PANEL ED-5D586-10) WHEN AUDIBLE ALM PNL ED-5D141-10,G4 IS PROVIDED

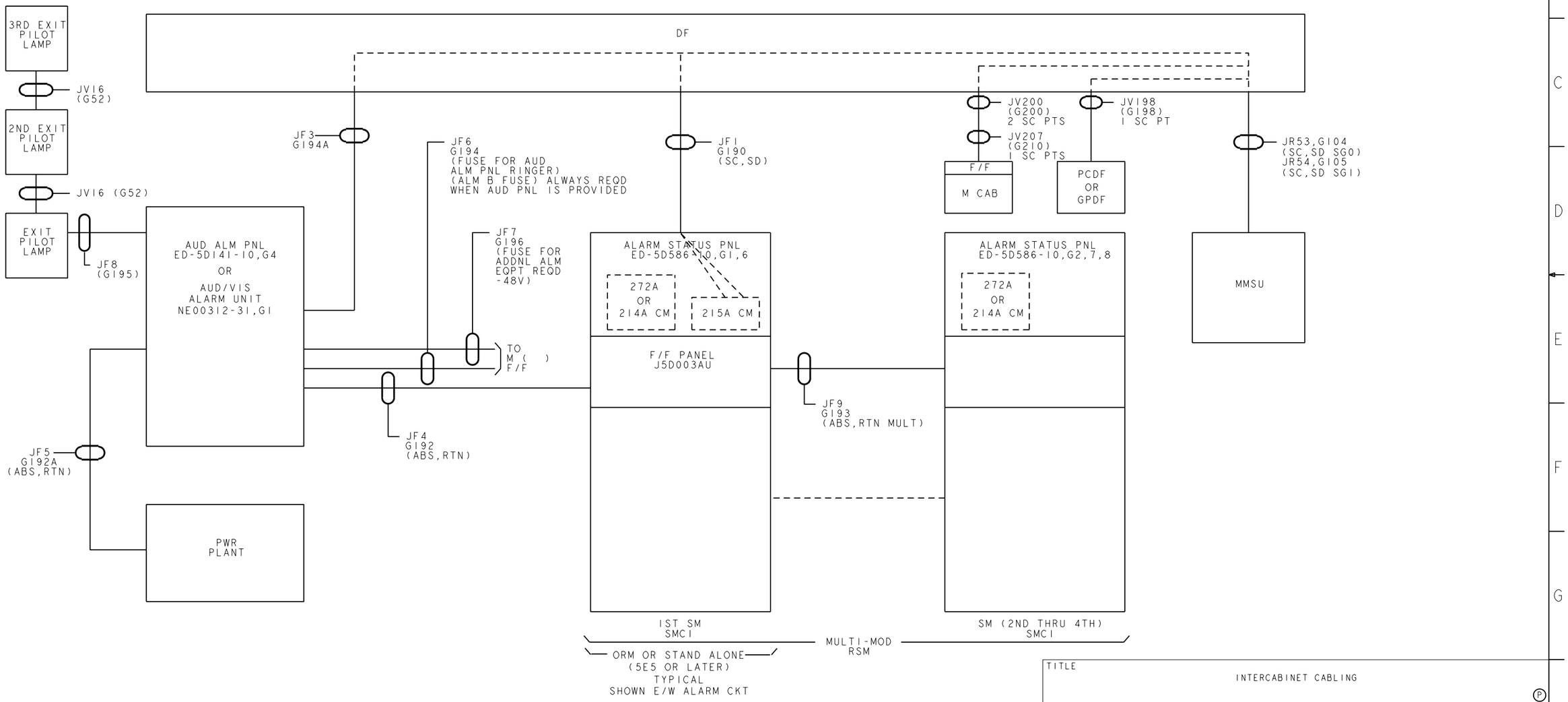

TITLE: INTERCABINET CABLING				
THIRD ANGLE PROJECTION	LUCENT TECHNOLOGIES - PROPRIETARY USE PURSUANT TO COMPANY INSTRUCTIONS			
Lucent Technologies Inc.	ED5D500-21	SHEET B37	ISSUE 112	DWG SIZE C2/AIR

ED5D500-21

LU.ISSUE2.FRM NOV 1999

NOTE :
MMRSM,ORM TRM WITHOUT AUDIBLE ALARM PANEL

LIST OF ORDERING GROUPS

IST SM G189 (SC & SD) CA JF10
G191 (ABS,RTN) CA JF2

SM G193 (ABS,RTN) CA JF9
(2ND THRU 4TH)

PCDF/GPDF G198 (1 SC PT) CA JV198

M CAB
F/F G200 (2 SC PTS) CA JV200
(WITH OPTO-ISOLATOR 982SC)

NOTE : FOR MFFU (J5D003FJ-1)
MMRSM,ORM TRM WITHOUT AUDIBLE ALARM PANEL

LIST OF ORDERING GROUPS

IST SM G189 (SC & SD) CA JF10
G191A (ABS,RTN) CA JF2A

SM G193A OR B (ABS,RTN) CA JF9A OR B
(2ND THRU 4TH)

PCDF/GPDF G198 (1 SC PT) CA JV198

M CAB
F/F G200 (2 SC PTS) CA JV200
(WITH OPTO-ISOLATOR 982SC)

M CAB
F/F G210 (1 SC PTS) CA JV207
(WITH OPTO-ISOLATOR 982SC)

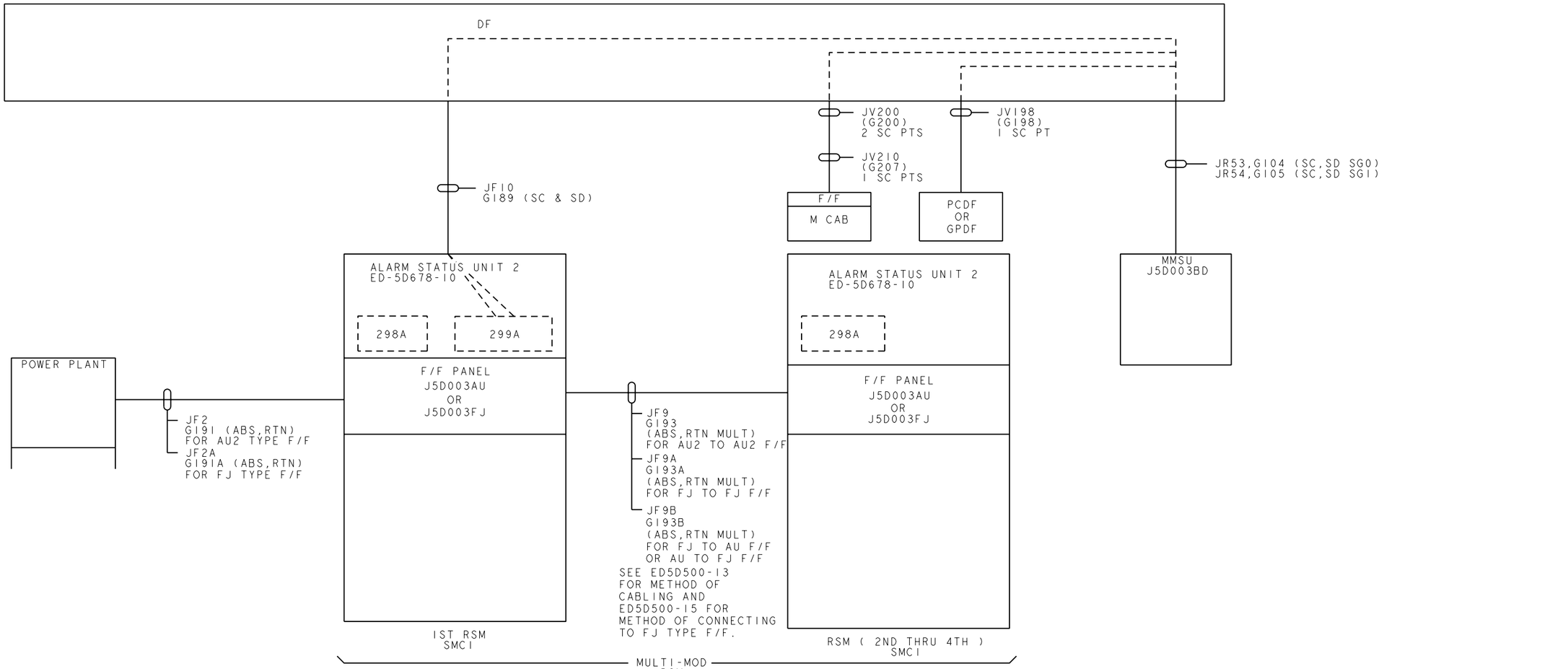

FIG. N3

ALARM NETWORK CABLING FOR MMRSM,ORM OR TRM
(ALARM STATUS PANEL ED-5D678-10)
WHEN AUDIBLE ALM PNL IS NOT SPEC.

TITLE
INTERCABINET CABLING

THIRD ANGLE PROJECTION

LUCENT TECHNOLOGIES - PROPRIETARY
USE PURSUANT TO COMPANY INSTRUCTIONS

Lucent Technologies Inc.

ED5D500-21

SHEET	ISSUE	DWG SIZE
B38	112	C2/AIR

ED5D500-21

NOTE:
MMRSM ,ORM OR TRM E/W AUDIBLE ALARM PANEL

LIST OF ORDERING GROUPS
1ST SM G189 (SC & SD) CA JF10
G192 & 192A (ABS,RTN) CA JF4 & JF5
G194A (SD) CA JF3
G194(FUSE FOR RINGER) CA JF6
G195 (EXIT PILOT LAMP) CA JF8
G196(FUSE FOR ADDNL ALARM EQUIPMENT REQUIRING -48V) CA JF7
SM (2ND THRU 4TH) G193 (ABS,RTN) CA JF9
PCDF/GPDF G198 (1 SC PT) CA JV198
M CAB F/F G200 (2 SC PTS) CA JV200 (WITH OPTO-ISOLATOR 982SC)

NOTE: FOR MFFU (J5D003FJ-1)
MMRSM ,ORM OR TRM E/W AUDIBLE ALARM PANEL

LIST OF ORDERING GROUPS
1ST SM G189 (SC & SD) CA JF10
G192B & 192A (ABS,RTN) CA JF4A & JF5
G194A (SD) CA JF3
G194 (FUSE FOR RINGER) CA JF6A
G195 (EXIT PILOT LAMP) CA JF8
G196 (FUSE FOR ADDNL ALARM EQUIPMENT REQUIRING -48V) CA JF7A
SM (2ND THRU 4TH) G193A (ABS,RTN) CA JF9A
PCDF/GPDF G198 (1 SC PT) CA JV198
M CAB MFFU G200A (2 SC PTS) CA JV200A (WITH OPTO-ISOLATOR CARD)

FIG. N2

ALARM NETWORK CABLING FOR MMRSM
(ALARM STATUS UNIT 2 ED-5D678-10)
WHEN AUDIBLE ALM PNL ED-5D141-10,G4 IS PROVIDED

3RD EXIT PILOT LAMP
JV16 (G52)
2ND EXIT PILOT LAMP
JV16 (G52)
EXIT PILOT LAMP
JF8 (G195)

AUD ALM PNL ED-5D141-10,G4
OR
AUD/VIS ALM UNIT NE00312-31,G1

JF5 G192A (ABS,RTN)

PWR PLANT

DF

JF3 G194A

JF6, G194 FOR AU-2 F/F (FUSE FOR AUD ALM PNL RINGER) (ALM B FUSE) ALWAYS REQD WHEN AUD PNL IS PROVIDED

JF6A, G194B FOR MFFU F/F (FUSE FOR AUD ALM PNL RINGER) (ALM B FUSE) ALWAYS REQD WHEN AUD PNL IS PROVIDED

JF7, G196 (FUSE FOR ADDNL ALM EQPT REQD -48V) FOR AU-2 F/F.

JF7A, G196A (FUSE FOR ADDNL ALM EQPT REQD -48V) FOR MFFU F/F.

TO M ( ) F/F

JF4 G192 (ABS,RTN) FOR AU2 TYPE F/F

JF4A G192B (ABS,RTN) FOR FJ TYPE F/F

SEE ED5D500-13 FOR METHOD OF CABLING AND ED5D500-15 FOR METHOD OF CONNECTING TO FJ TYPE F/F.

JF10 G189 (SC,SD)

ALARM STATUS UNIT 2 ED-5D678-10
298A
299A
F/F PANEL J5D003AU

JF9 G193 (ABS,RTN MULT) FOR AU TO AU F/F

JF9A G193A (ABS,RTN MULT) FOR FJ TO FJ F/F

JF9B G193B (ABS,RTN MULT) FOR AU TO FJ F/F OR FJ TO AU F/F SEE ENG NOTE 157

SEE ED5D500-13 FOR METHOD OF CABLING AND ED5D500-15 FOR METHOD OF CONNECTING TO FJ TYPE F/F.

JV200A (G200A) 2 SC PTS FOR MFFU

JV200 (G200) 2 SC PTS FOR AU-2 F/F

F/F
M CAB

JV198 (G198) 1 SC PT

PCDF OR GPDF

ALARM STATUS UNIT 2 ED-5D678-10
298A

JR53,G104 (SC,SD SG0) JR54,G105 (SC,SD SG1)

MMSU

1ST SM SMC1

ORM OR STAND ALONE (5E5 OR LATER) TYPICAL SHOWN E/W ALARM CKT

MULTI-MOD RSM

SM (2ND THRU 4TH) SMC1

TITLE: INTERCABINET CABLING

THIRD ANGLE PROJECTION

LUCENT TECHNOLOGIES - PROPRIETARY
USE PURSUANT TO COMPANY INSTRUCTIONS

Lucent Technologies Inc.

ED5D500-21

SHEET	ISSUE	DWG SIZE
B39	112	C2/AIR

ED5D500-21

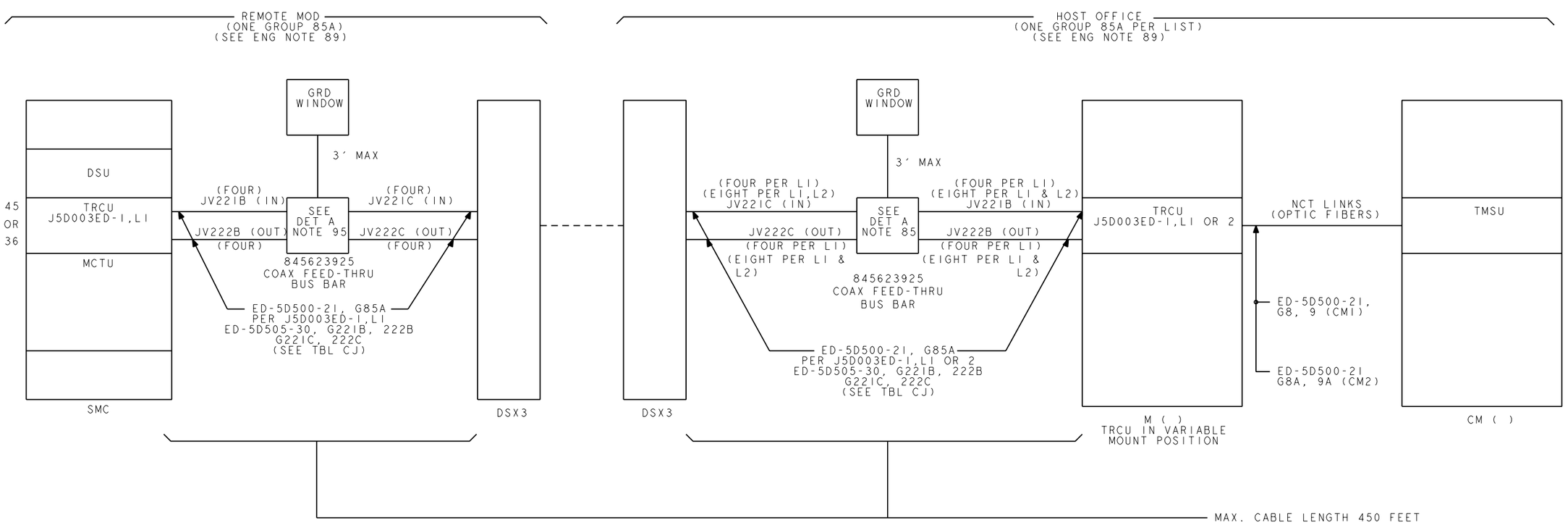

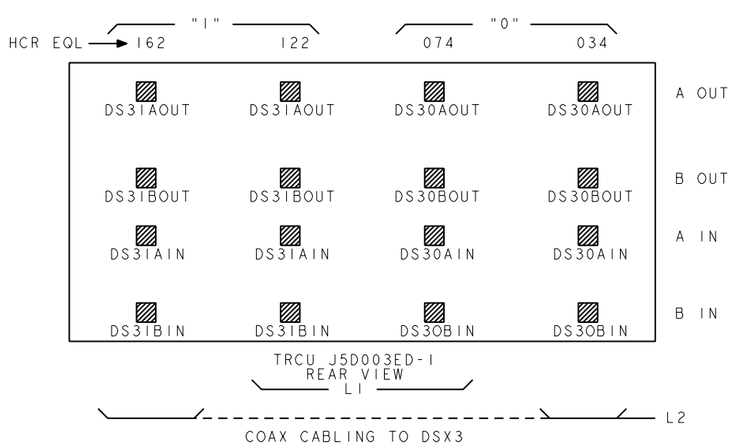

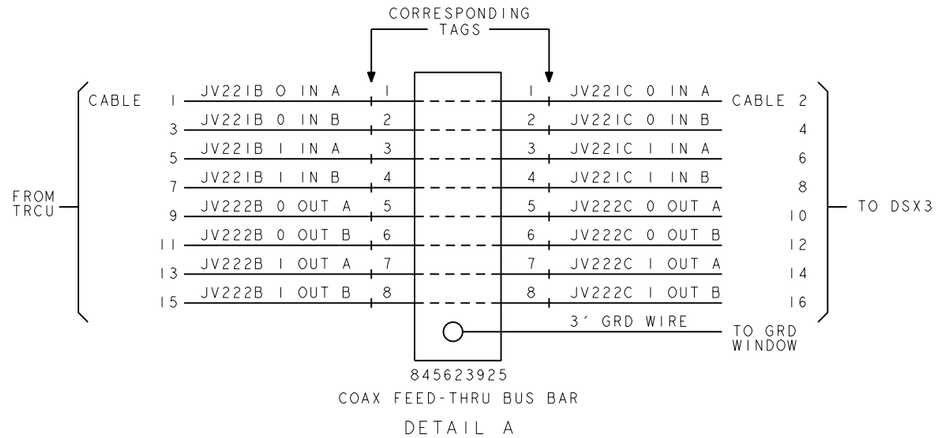

DETAIL A

FIG. R
ORM COAX CABLING
TRCU (J5D003ED-1) L1 OR 2

TITLE: INTERCABINET CABLING				
THIRD ANGLE PROJECTION	LUCENT TECHNOLOGIES - PROPRIETARY USE PURSUANT TO COMPANY INSTRUCTIONS			
Lucent Technologies Inc.	ED5D500-21	SHEET B40	ISSUE 112	DWG SIZE C2/AIR

ED5D500-21

LU.ISSUE2.FRM NOV 1999

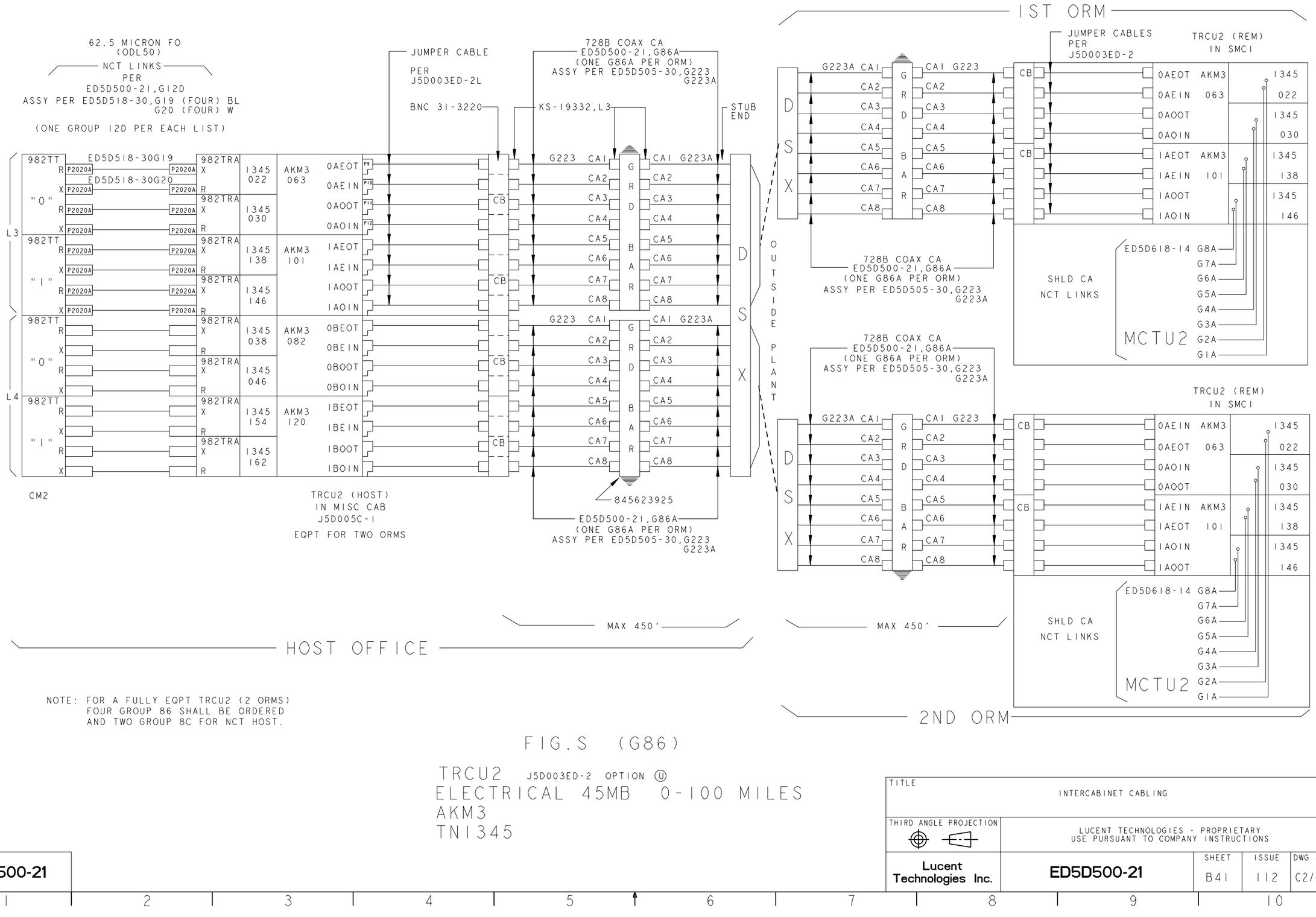

NOTE: FOR A FULLY EQPT TRCU2 (2 ORMS)
FOUR GROUP 86 SHALL BE ORDERED
AND TWO GROUP 8C FOR NCT HOST.

FIG.S (G86)

TRCU2 J5D003ED-2 OPTION Ⓤ
ELECTRICAL 45MB 0-100 MILES
AKM3
TN1345

TITLE: INTERCABINET CABLING Ⓟ					
THIRD ANGLE PROJECTION	LUCENT TECHNOLOGIES - PROPRIETARY USE PURSUANT TO COMPANY INSTRUCTIONS				
Lucent Technologies Inc.	ED5D500-21	SHEET B41	ISSUE 112	DWG SIZE C2/AIR	

ED5D500-21

LU.ISSUE2.FRM NOV 1999

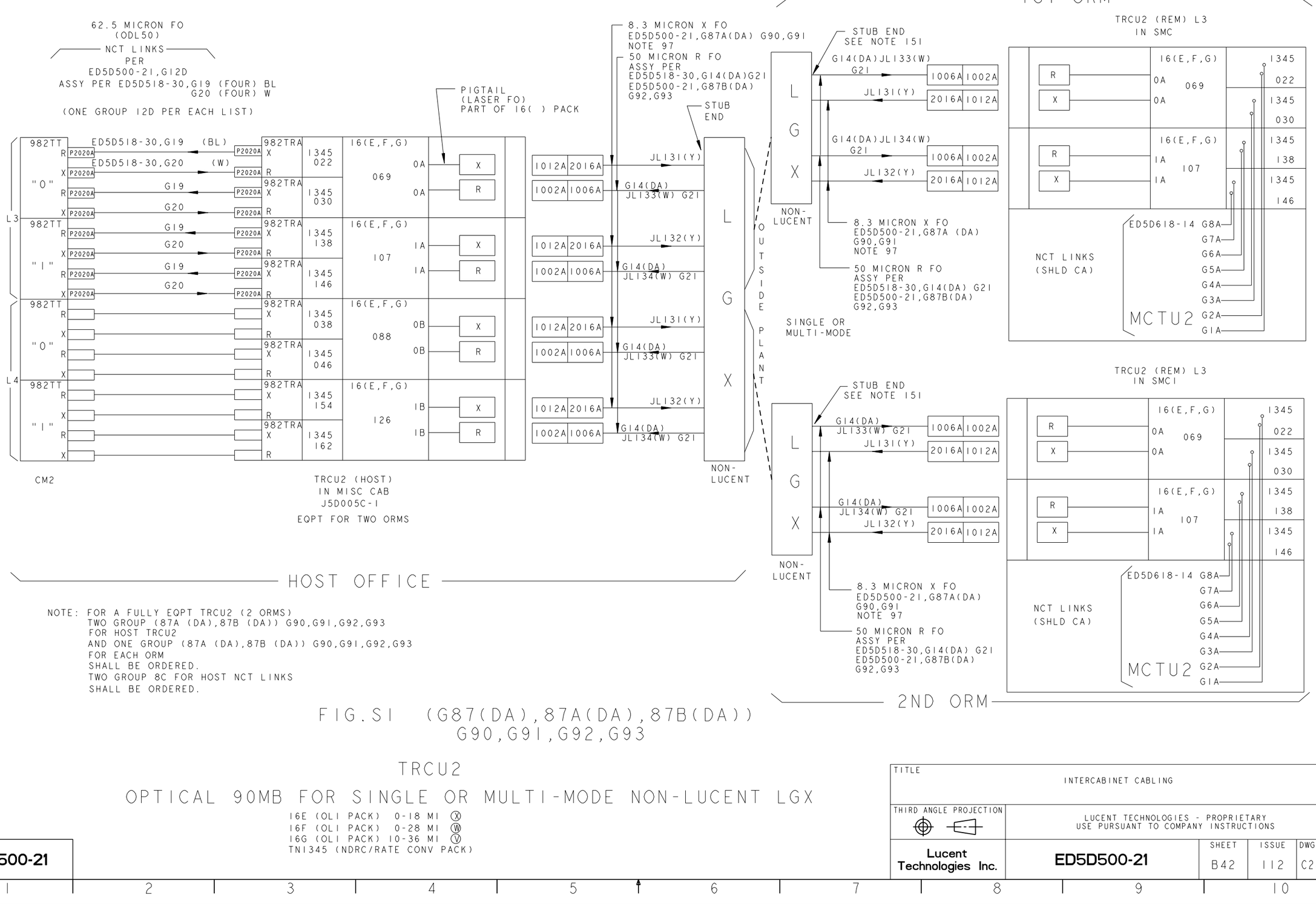

NOTE: FOR A FULLY EQPT TRCU2 (2 ORMS)
TWO GROUP (87A (DA),87B (DA)) G90,G91,G92,G93
FOR HOST TRCU2
AND ONE GROUP (87A (DA),87B (DA)) G90,G91,G92,G93
FOR EACH ORM
SHALL BE ORDERED.
TWO GROUP 8C FOR HOST NCT LINKS
SHALL BE ORDERED.

FIG.S1 (G87(DA),87A(DA),87B(DA)) G90,G91,G92,G93

TRCU2

OPTICAL 90MB FOR SINGLE OR MULTI-MODE NON-LUCENT LGX

16E (OLI PACK) 0-18 MI Ⓧ
16F (OLI PACK) 0-28 MI Ⓦ
16G (OLI PACK) 10-36 MI Ⓥ
TN1345 (NDRC/RATE CONV PACK)

TITLE: INTERCABINET CABLING Ⓟ					
THIRD ANGLE PROJECTION	LUCENT TECHNOLOGIES - PROPRIETARY USE PURSUANT TO COMPANY INSTRUCTIONS				
Lucent Technologies Inc.	ED5D500-21	SHEET B42	ISSUE 112	DWG SIZE C2/AIR	

ED5D500-21

LU.ISSUE2.FRM NOV 1999

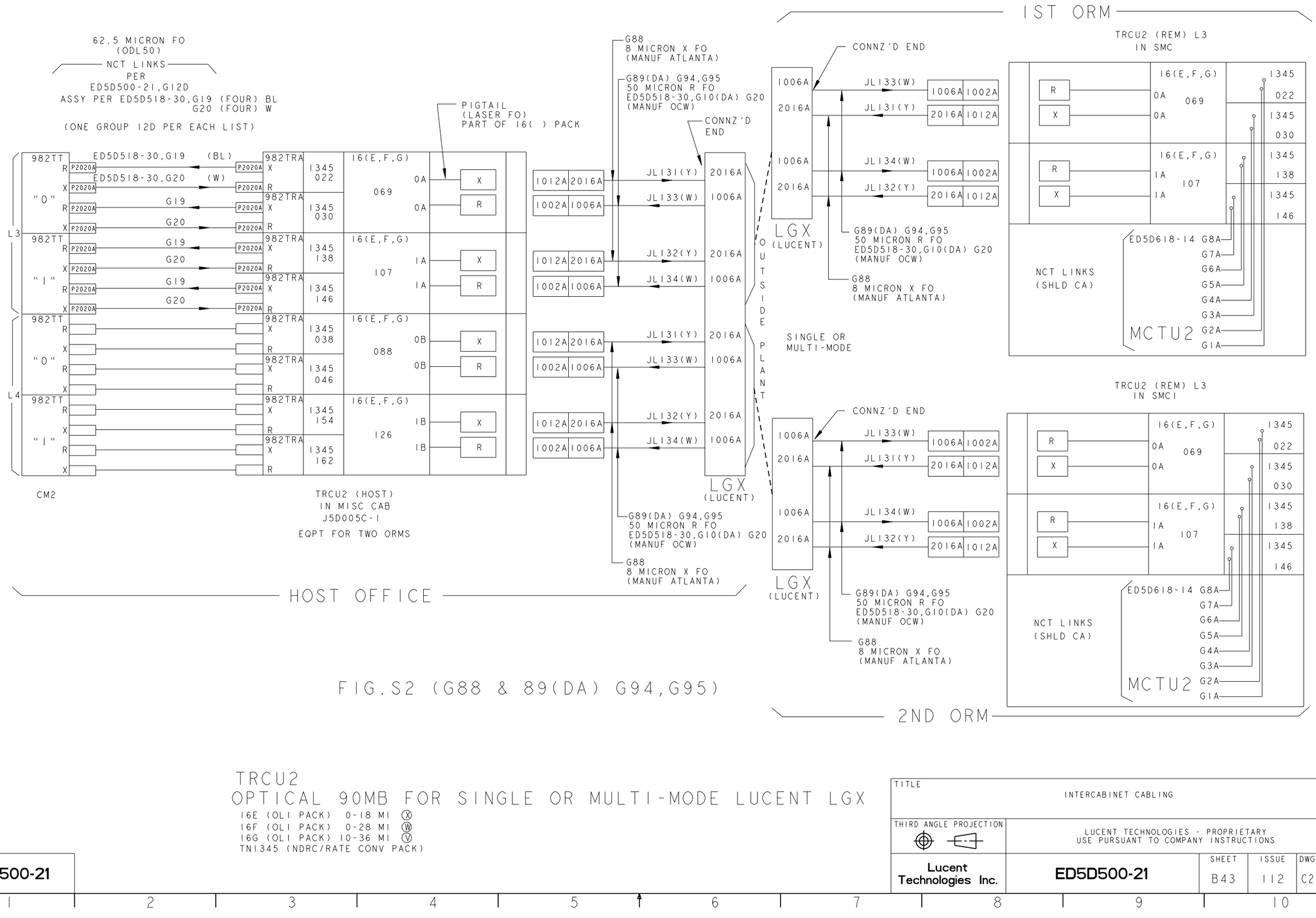

FIG.S2 (G88 & 89(DA) G94,G95)

TRCU2
OPTICAL 90MB FOR SINGLE OR MULTI-MODE LUCENT LGX

I6E (OLI PACK) 0-18 MI Ⓧ
I6F (OLI PACK) 0-28 MI Ⓦ
I6G (OLI PACK) I0-36 MI Ⓥ
TNI345 (NDRC/RATE CONV PACK)

TITLE	INTERCABINET CABLING Ⓟ
THIRD ANGLE PROJECTION	LUCENT TECHNOLOGIES - PROPRIETARY USE PURSUANT TO COMPANY INSTRUCTIONS
Lucent Technologies Inc.	ED5D500-21
SHEET	B43
ISSUE	I12
DWG SIZE	C2/AIR

ED5D500-21

LU.ISSUE2.FRM NOV 1999

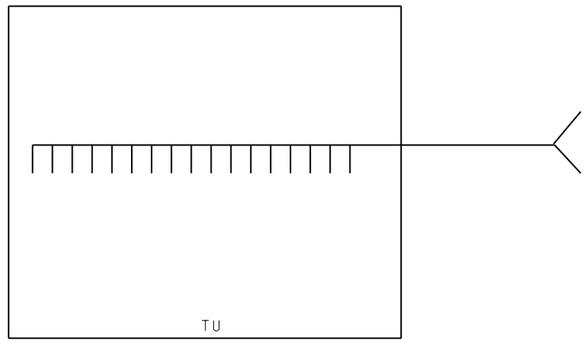

EQPT	ED5D503-32	ED5D500-21 GROUP
J5D003AC OR J5D003AG	JR103 JR104	G 121

711 CONN

89M TYPE DF BLK ONLY
711 CONN
CONN BLOCK SEE NOTE 54
& FIG T1

EQPT	ED5D503-32	ED5D500-21 GROUP
J5D003AC OR J5D003AG	JR103B JR104B	G 121B

TRW CONN

89M TYPE DF BLK ONLY
TRW CONN
CONN BLOCK SEE NOTE 54
& FIG T2

FIG. T

CABLING ARRANGEMENT FOR DISTRIBUTING FRAME
E/W 711 OR TRW CONN AND 89M TYPE DF BLKS

TITLE: INTERCABINET CABLING Ⓟ				
THIRD ANGLE PROJECTION	LUCENT TECHNOLOGIES - PROPRIETARY USE PURSUANT TO COMPANY INSTRUCTIONS			
Lucent Technologies Inc.	ED5D500-21	SHEET B44	ISSUE 112	DWG SIZE C2/AIR

ED5D500-21

LU_ISSUE2.FRM NOV 1999

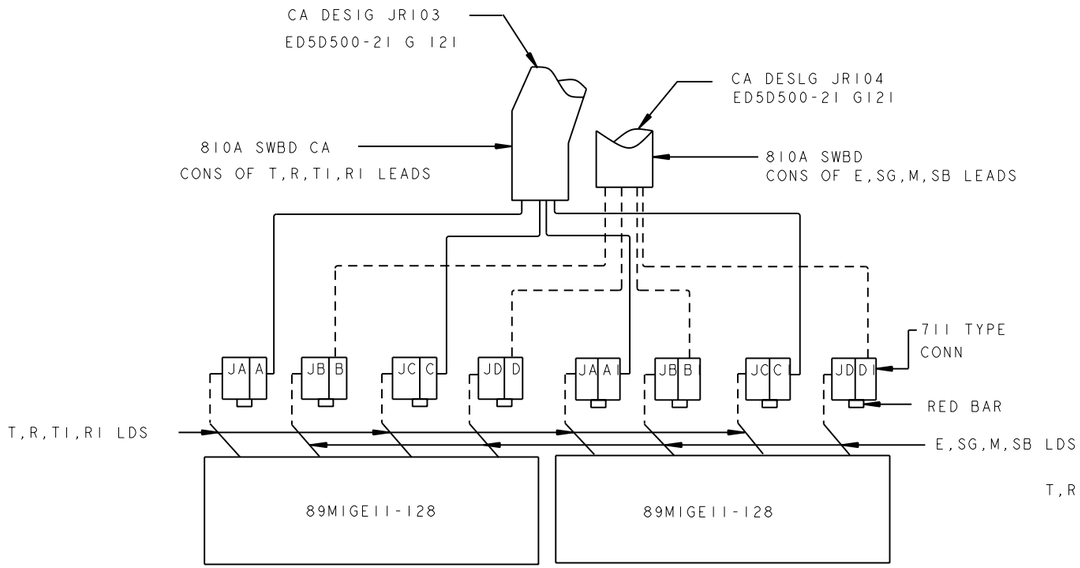

FIG. T1

TU CABLING TOP VIEW

TYPICAL CABLING INFORMATION FOR TRUNK UNIT PER J5D003AC. TWO 810A CABLES ARE USED AND TWO 89MIGE11-128 ARE REQO PER UNIT. ONE CABLE CONTAINS T,R, TI,RI LEADS AND OCCUPIES BOTTOM HALF OF CLOSED BLOCK. SECOND CABLE CONTAINS E,SG,M,SB LEADS AND OCCUPIES TOP HALF OF CLOSED BLOCK. VIEW SHOWS MATCHING RELATIONSHIP OF 711 CONN POSITIONS.

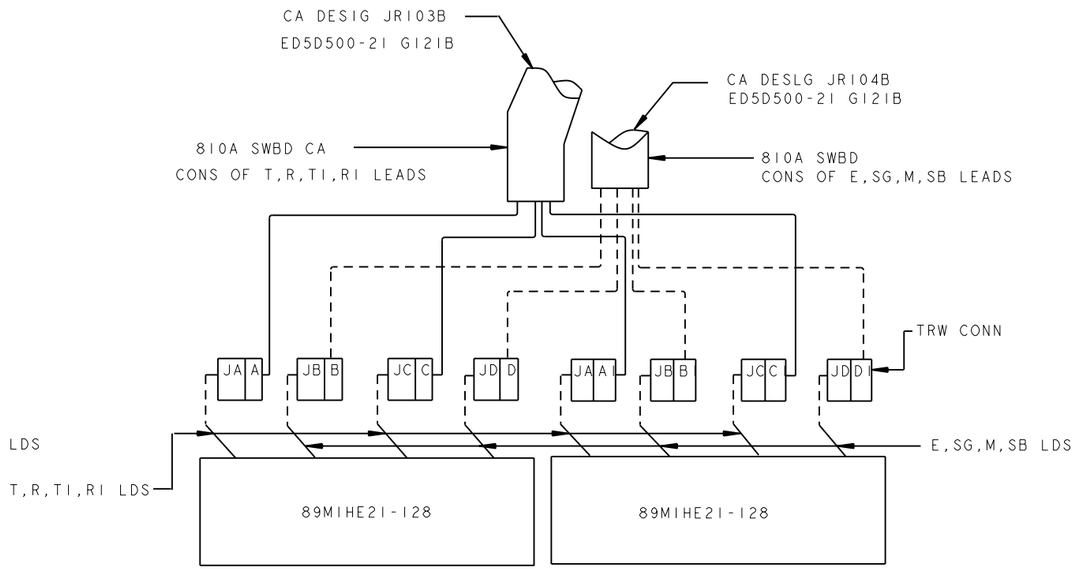

FIG. T2

TU CABLING TOP VIEW

TYPICAL CABLING INFORMATION FOR A TRUNK UNIT PER J5D003AC.TWO 810A CABLES ARE USED AND TWO 89MIHE21-128 ARE REQD PER UNIT. ONE CABLE CONTAINS T,R,TI,RI LEADS AND OCCUPIES TOP AND LOWER MIDDLE POS. SECOND CABLE CONTAINS E,SG,M,SB, LEADS AND OCCUPIES LOWER AND UPPER MIDDLE POSITIOMS. VIEW SHOW MATCHING RELATIONSHIP OF CONN POSITIONS.

TITLE
INTERCABINET CABLING

THIRD ANGLE PROJECTION

LUCENT TECHNOLOGIES - PROPRIETARY
USE PURSUANT TO COMPANY INSTRUCTIONS

Lucent Technologies Inc.

ED5D500-21

SHEET	ISSUE	DWG SIZE
B45	112	C2/AIR

LU.ISSUE2.FRM NOV 1999

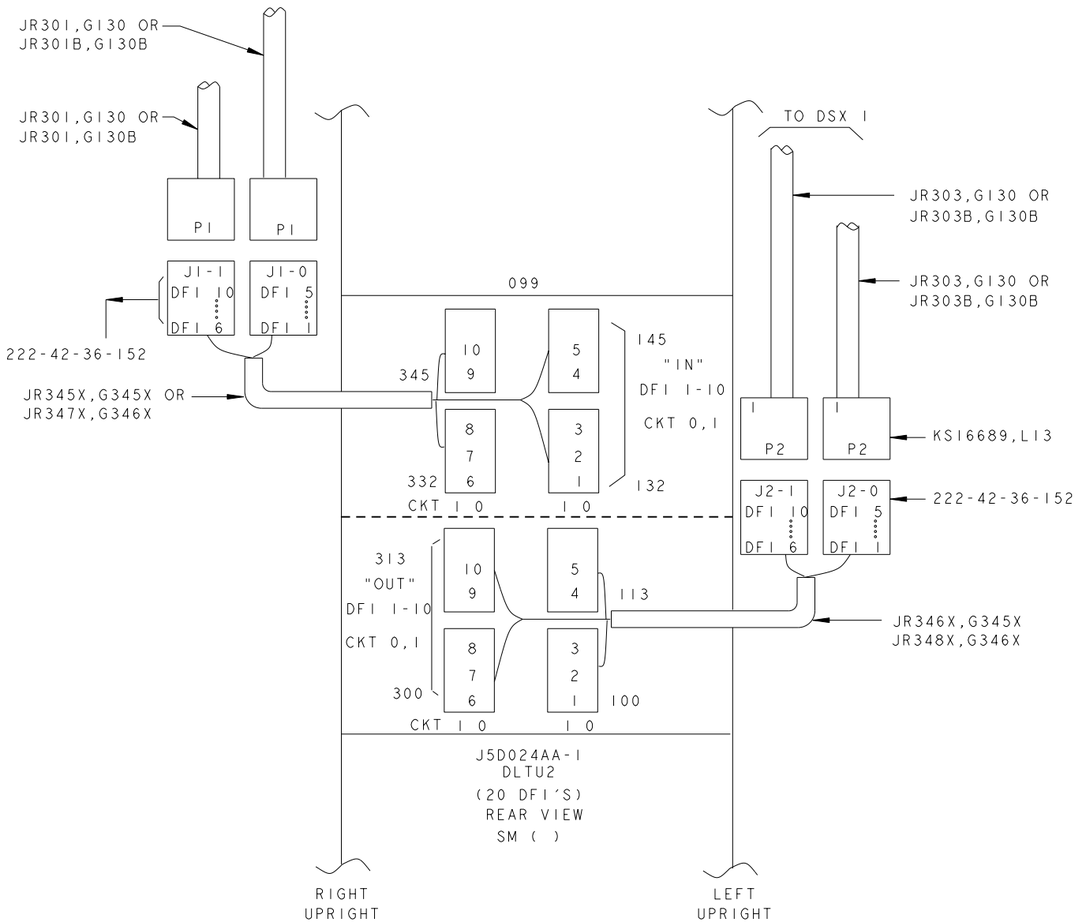

FIG X1

FOR CABLE JR345X,346X,347X,348X FOR PRE-CONDITIONED 5ESS® SWITCH

WHEN DSX-1 IS WIRED FOR DLTU1 (TWO GROUPS 130 OR 130B)
AND SMC IS EQUIPPED WITH DLTU2 (J5D024AA).
PRE-CONDITIONED CABLES MAY BE RUN IN RAISED FLOORS OR PALLETS.
(NO FIELD WIRING IS REQUIRED FOR THIS OPTION.)

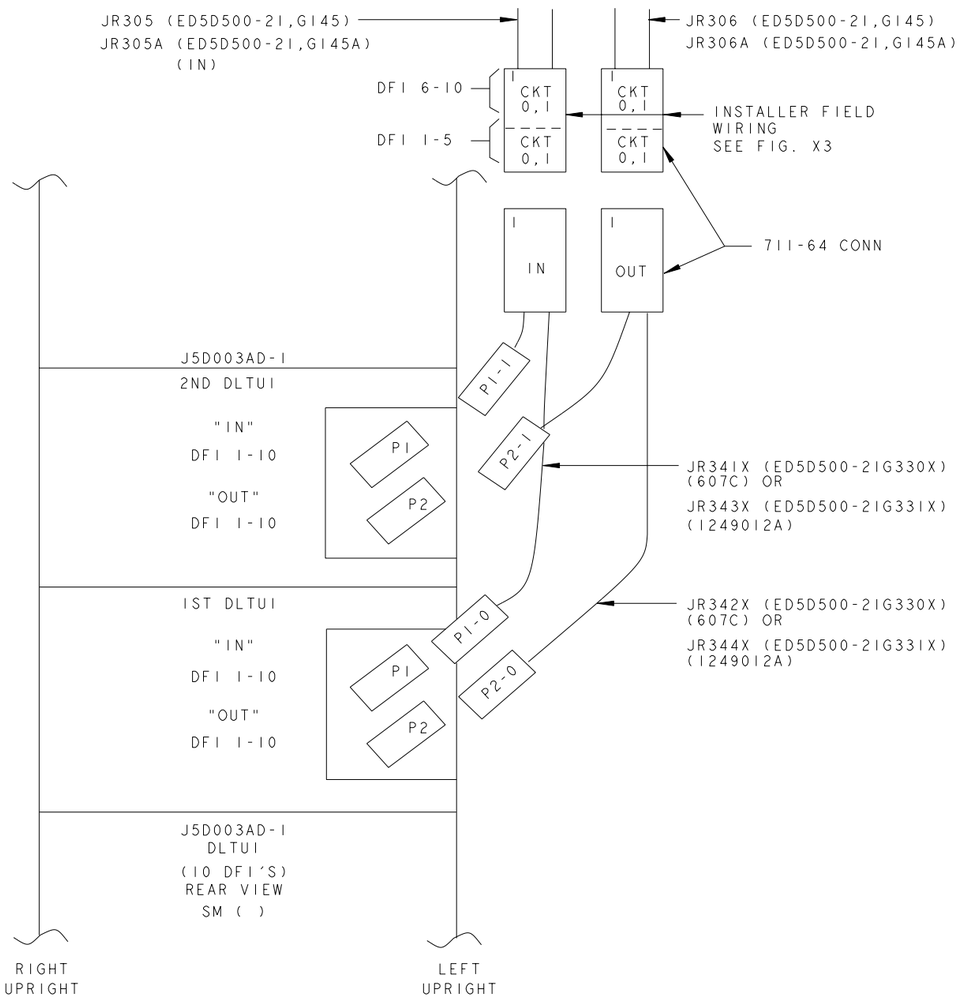

FIG. X2

FOR CABLE JR341X,342X,343X,344X FOR PRE-CONDITIONED 5ESS® SWITCH

WHEN DSX-1 IS PREWIRED FOR DLTU2 (G145 OR 145A)
AND SMC ( ) IS EQUIPPED WITH DLTU1 (J5D003AD).
PRE-CONDITIONED CABLE MAY BE RUN IN RAISED FLOORS OR PALLETS.
(SEE FIG X3 FOR INSTALLER FIELD WIRING)

ED5D500-21

TITLE: INTERCABINET CABLING Ⓟ

THIRD ANGLE PROJECTION

LUCENT TECHNOLOGIES - PROPRIETARY
USE PURSUANT TO COMPANY INSTRUCTIONS

Lucent Technologies Inc.

ED5D500-21

SHEET	ISSUE	DWG SIZE
B46	112	C2/AIR

LU.ISSUE2.FRM NOV 1999

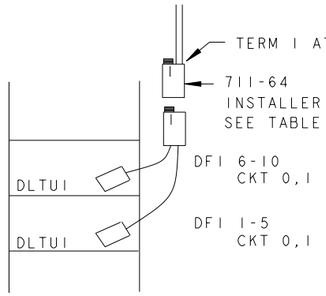

PRE-CONDITIONED CABLES
RUN IN THE CABLE RACK

TO UPPER
DLTU1

TO LOWER
DLTU1

TABLE A

711RABI-64 (609C) OR 711RADI-64 (1249020ACA)

RING DFI	WIRE COLOR	TERM	TERM	WIRE COLOR	TIP DFI	CKT	CABLE	CABLE
R10	S-Y	64	32	Y-S	T10	1	"IN"	"OUT"
R10	BR-Y	63	31	Y-BR	T10	0	305	306
R09	G-Y	62	30	Y-G	T09	1	OR	OR
R09	O-Y	61	29	Y-O	T09	0	305A	306A
R08	BL-Y	60	28	Y-BL	T08	1		
R08	S-BK	59	27	BK-S	T08	0		
R07	BR-BK	58	26	BK-BR	T07	1		
R07	G-BK	57	25	BK-G	T07	0		
R06	O-BK	56	24	BK-O	T06	1		
R06	BL-BK	55	23	BK-BL	T06	0		
		54	22	*BK	GRD			
		53	21					
		52	20					
		51	19					
		50	18					
		49	17					
		48	16					
		47	15					
		46	14					
		45	13					
		44	12				"IN"	"OUT"
		43	11	*BK	GRD		305	306
R05	S-R	42	10	R-S	T05	1	OR	OR
R05	BR-R	41	9	R-BR	T05	0	305A	306A
T04	G-R	40	8	R-G	T04	1		
T04	O-R	39	7	R-O	T04	0		
T03	BL-R	38	6	R-BL	T03	1		
T03	S-W	37	5	W-S	T03	0		
T02	BR-W	36	4	W-BR	T02	1		
T02	G-W	35	3	W-G	T02	0		
T01	O-W	34	2	W-O	T01	1		
T01	BL-W	33	1	W-BL	T01	0		

* FOR PREPARATION OF GRD WIRE SEE TCED5D503-32 SKA (609C) OR SKB (1249)

** STAMP ON THE CONNECTOR CA DESIG AND SM( )

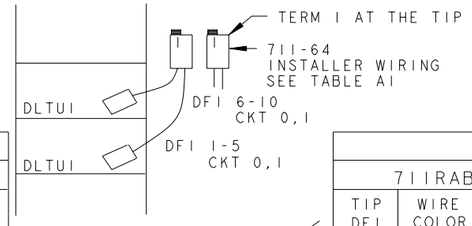

PRE-CONDITIONED CABLES
RUN IN THE FLOOR/PALLET

TO LOWER
DLTU1

TO UPPER
DLTU1

TABLE A1

711RABI-64 (609C) OR 711RADI-64 (1249 CA)

TIP DFI	WIRE COLOR	TERM	TERM	WIRE COLOR	RING DFI	CKT	CABLE	CABLE
T01	W-BL	1	33	BL-W	R01	0	"IN"	"OUT"
T01	W-O	2	34	O-W	R01	1	305	306
T02	W-G	3	35	G-W	R02	0	OR	OR
T02	W-BR	4	36	BR-W	R02	1	305A	306A
T03	W-S	5	37	S-W	R03	0		
T03	R-BL	6	38	BL-R	R03	1		
T04	R-O	7	39	O-R	R04	0		
T04	R-G	8	40	G-R	R04	1		
T05	R-BR	9	41	BR-R	R05	0		
T05	R-S	10	42	S-R	R05	1		
GRD	*BK	11	43					
		12	44					
		13	45					
		14	46					
		15	47					
		16	48					
		17	49					
		18	50					
		19	51					
		20	52					
		21	53				"IN"	"OUT"
GRD	*BK	22	54				305	306
T06	BK-BL	23	55	BL-BK	R06	0	OR	OR
T06	BK-O	24	56	O-BK	R06	1	305A	306A
T07	BK-G	25	57	G-BK	R07	0		
T07	BK-BR	26	58	BR-BK	R07	1		
T08	BK-S	27	59	S-BK	R08	0		
T08	Y-BL	28	60	BL-Y	R08	1		
T09	Y-O	29	61	O-Y	R09	0		
T09	Y-G	30	62	G-Y	R09	1		
T10	Y-BR	31	63	BR-Y	R10	0		
T10	Y-S	32	64	S-Y	R10	1		

* FOR PREPARATION OF GRD WIRE SEE TCED5D503-32 SKA (609C) OR SKB (1249)

** STAMP ON THE CONNECTOR CA DESIG AND SM( )

FIG. X3

INSTALLER FIELD WIRING INFORMATION FOR THE OPTION WHEN
PRE-CONDITIONED 5ESS○ SWITCH DSX1 IS PREWIRED
FOR DLTU2 AND SMC( ) IS EQUIPPED WITH DLTU1'S

TITLE: INTERCABINET CABLING Ⓟ

THIRD ANGLE PROJECTION

LUCENT TECHNOLOGIES - PROPRIETARY
USE PURSUANT TO COMPANY INSTRUCTIONS

Lucent Technologies Inc.

ED5D500-21

SHEET	ISSUE	DWG SIZE
B47	112	C2/AIR

ED5D500-21

SIDE 1

55	BKDI BKD2 DX CA TX RX PORT 39 180	BKDI BKD2 DX CA TX RX PORT 35 172	BKDI BKD2 DX CA TX RX PORT 31 164	BKDI BKD2 DX CA TX RX PORT 27 156	BKDI BKD2 DX CA TX RX PORT 23 148	BKDI BKD2 DX CA TX RX PORT 19 138	BKDI BKD2 DX CA TX RX PORT 15 130	BKDI BKD2 982YE TX RX PORT 11 122	BKDI BKD2 982YE TX RX PORT 07 114	BKDI TX RX PORT 03 106
51	BKDI BKD2 DX CA TX RX PORT 38 180	BKDI BKD2 DX CA TX RX PORT 34 172	BKDI BKD2 DX CA TX RX PORT 30 164	BKDI BKD2 DX CA TX RX PORT 26 156	BKDI BKD2 DX CA TX RX PORT 22 148	BKDI BKD2 DX CA TX RX PORT 18 138	BKDI BKD2 982YE TX RX PORT 14 130	BKDI BKD2 982YE TX RX PORT 10 122	BKDI BKD2 982YE TX RX PORT 06 114	BKDI TX RX PORT 02 106
47	BKDI BKD2 DX CA TX RX PORT 37 180	BKDI BKD2 DX CA TX RX PORT 33 172	BKDI BKD2 DX CA TX RX PORT 29 164	BKDI BKD2 DX CA TX RX PORT 25 156	BKDI BKD2 DX CA TX RX PORT 21 148	BKDI BKD2 DX CA TX RX PORT 17 138	BKDI BKD2 DX CA TX RX PORT 13 130	BKDI BKD2 DX CA TX RX PORT 09 122	BKDI BKD2 DX CA TX RX PORT 05 114	BKD4 TX RX 106
43	BKDI BKD2 DX CA TX RX PORT 36 180	BKDI BKD2 DX CA TX RX PORT 32 172	BKDI BKD2 DX CA TX RX PORT 28 164	BKDI BKD2 DX CA TX RX PORT 24 156	BKDI BKD2 DX CA TX RX PORT 20 148	BKDI BKD2 DX CA TX RX PORT 16 138	BKDI BKD2 DX CA TX RX PORT 12 130	BKDI BKD2 DX CA TX RX PORT 08 122	BKDI BKD2 DX CA TX RX PORT 04 114	

SIDE 0

55	BKDI BKD2 DX CA TX RX PORT 39 092	BKDI BKD2 DX CA TX RX PORT 35 084	BKDI BKD2 DX CA TX RX PORT 31 076	BKDI BKD2 DX CA TX RX PORT 27 068	BKDI BKD2 DX CA TX RX PORT 23 060	BKDI BKD2 DX CA TX RX PORT 19 050	BKDI BKD2 DX CA TX RX PORT 15 042	BKDI BKD2 982YE TX RX PORT 11 034	BKDI BKD2 982YE TX RX PORT 07 026	BKDI TX RX PORT 03 018
51	BKDI BKD2 DX CA TX RX PORT 38 092	BKDI BKD2 DX CA TX RX PORT 34 084	BKDI BKD2 DX CA TX RX PORT 30 076	BKDI BKD2 DX CA TX RX PORT 26 068	BKDI BKD2 DX CA TX RX PORT 22 060	BKDI BKD2 DX CA TX RX PORT 18 050	BKDI BKD2 982YE TX RX PORT 14 042	BKDI BKD2 982YE TX RX PORT 10 034	BKDI BKD2 982YE TX RX PORT 06 026	BKDI TX RX PORT 02 018
47	BKDI BKD2 DX CA TX RX PORT 37 092	BKDI BKD2 DX CA TX RX PORT 33 084	BKDI BKD2 DX CA TX RX PORT 29 076	BKDI BKD2 DX CA TX RX PORT 25 068	BKDI BKD2 DX CA TX RX PORT 21 060	BKDI BKD2 DX CA TX RX PORT 17 180	BKDI BKD2 DX CA TX RX PORT 13 042	BKDI BKD2 DX CA TX RX PORT 09 034	BKDI BKD2 DX CA TX RX PORT 05 026	BKD4 TX RX 018
43	BKDI BKD2 DX CA TX RX PORT 36 092	BKDI BKD2 DX CA TX RX PORT 32 084	BKDI BKD2 DX CA TX RX PORT 28 076	BKDI BKD2 DX CA TX RX PORT 24 068	BKDI BKD2 DX CA TX RX PORT 20 060	BKDI BKD2 DX CA TX RX PORT 16 050	BKDI BKD2 DX CA TX RX PORT 12 042	BKDI BKD2 DX CA TX RX PORT 08 034	BKDI BKD2 DX CA TX RX PORT 04 026	

EQUIP CODE
XMIT PORT
REC PORT
43 VERT EQL
PORT NUMBER
HORZ EQL

FIG. Z

TSIU4 XMIT AND REC PORT LOCATIONS
FOR SM2000 NCT2 LINKS

TITLE: INTERCABINET CABLING				
THIRD ANGLE PROJECTION	LUCENT TECHNOLOGIES - PROPRIETARY USE PURSUANT TO COMPANY INSTRUCTIONS			
Lucent Technologies Inc.	ED5D500-21	SHEET B48	ISSUE 112	DWG SIZE C2/AIR

ED5D500-21

LU.ISSUE2.FRM NOV 1999

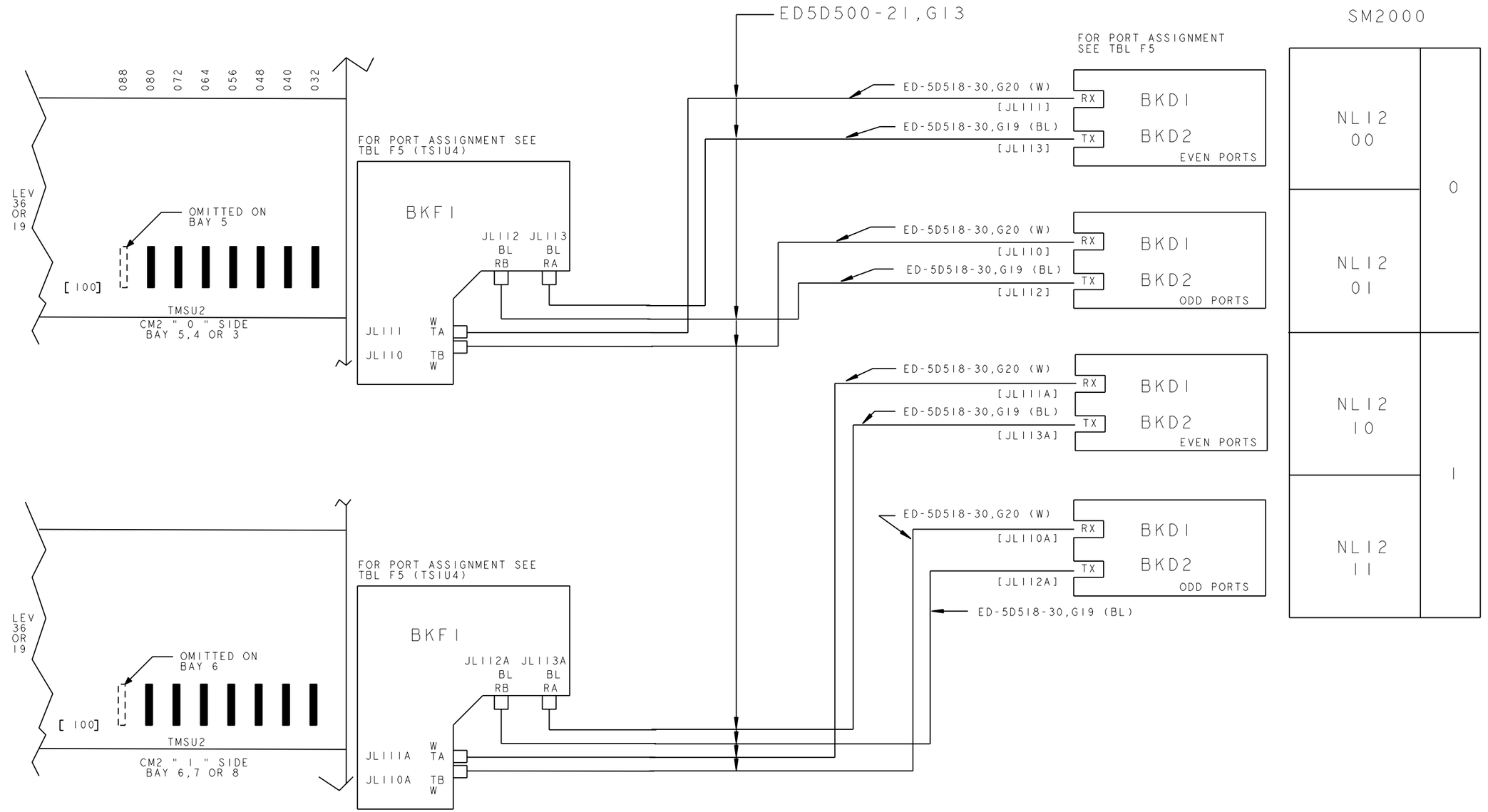

FIG. M8

NCT2 LINKS TO CM2 "0 AND 1" SIDE
SINGLE FABRIC
FROM SM2000,SMC CABINET E/W TSIU4

TITLE	INTERCABINET CABLING
THIRD ANGLE PROJECTION	LUCENT TECHNOLOGIES - PROPRIETARY USE PURSUANT TO COMPANY INSTRUCTIONS
Lucent Technologies Inc.	ED5D500-21
SHEET	B49
ISSUE	112
DWG SIZE	C2/AIR

ED5D500-21

LU.ISSUE2.FRM NOV 1999

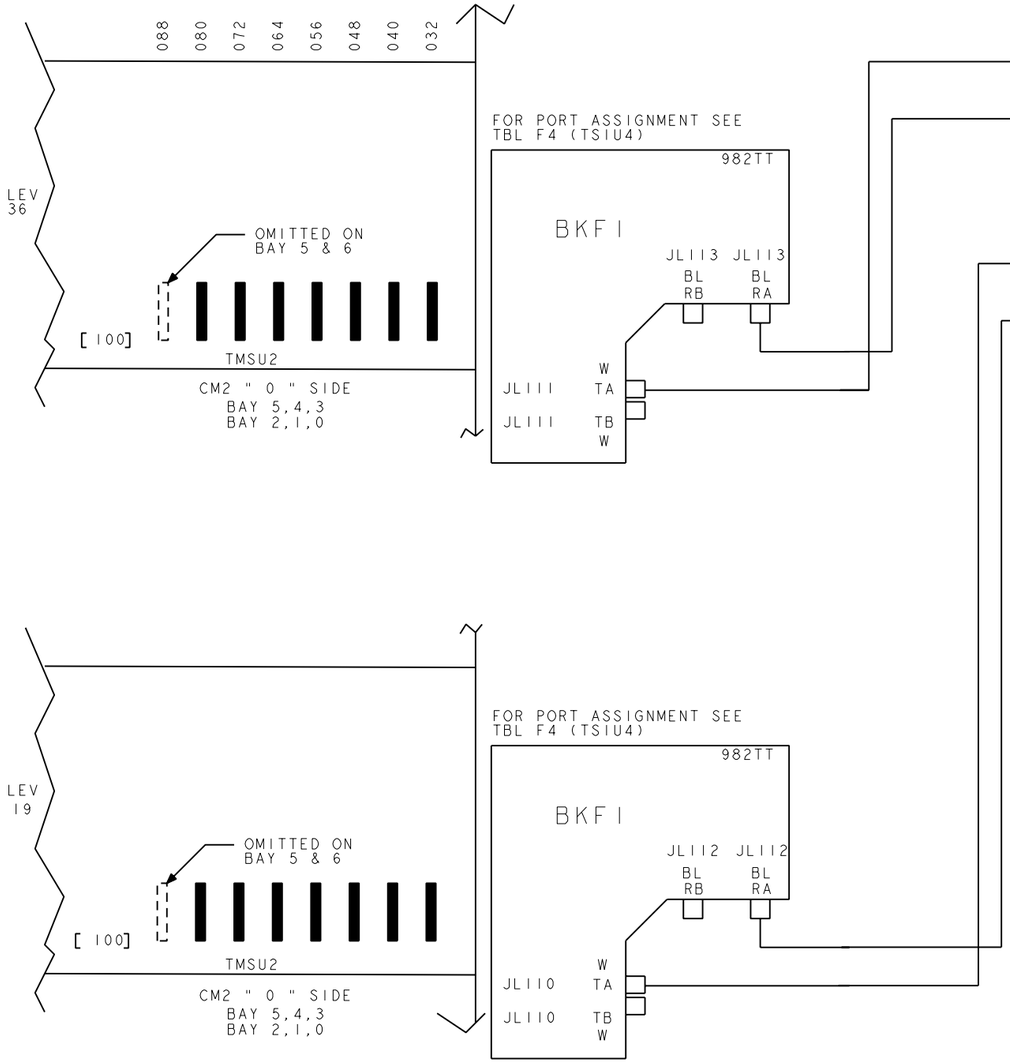

FIG. M8 CONT

NCT2 LINKS TO CM2 "0" SIDE
DUAL FABRIC
FROM SM2000,SMC CABINET E/W TSIU4

TITLE: INTERCABINET CABLING			
THIRD ANGLE PROJECTION	LUCENT TECHNOLOGIES - PROPRIETARY USE PURSUANT TO COMPANY INSTRUCTIONS		
Lucent Technologies Inc.	ED5D500-21	SHEET: B50	ISSUE: 112 / DWG SIZE: C2/AIR

ED5D500-21

LU.ISSUE2.FRM NOV 1999

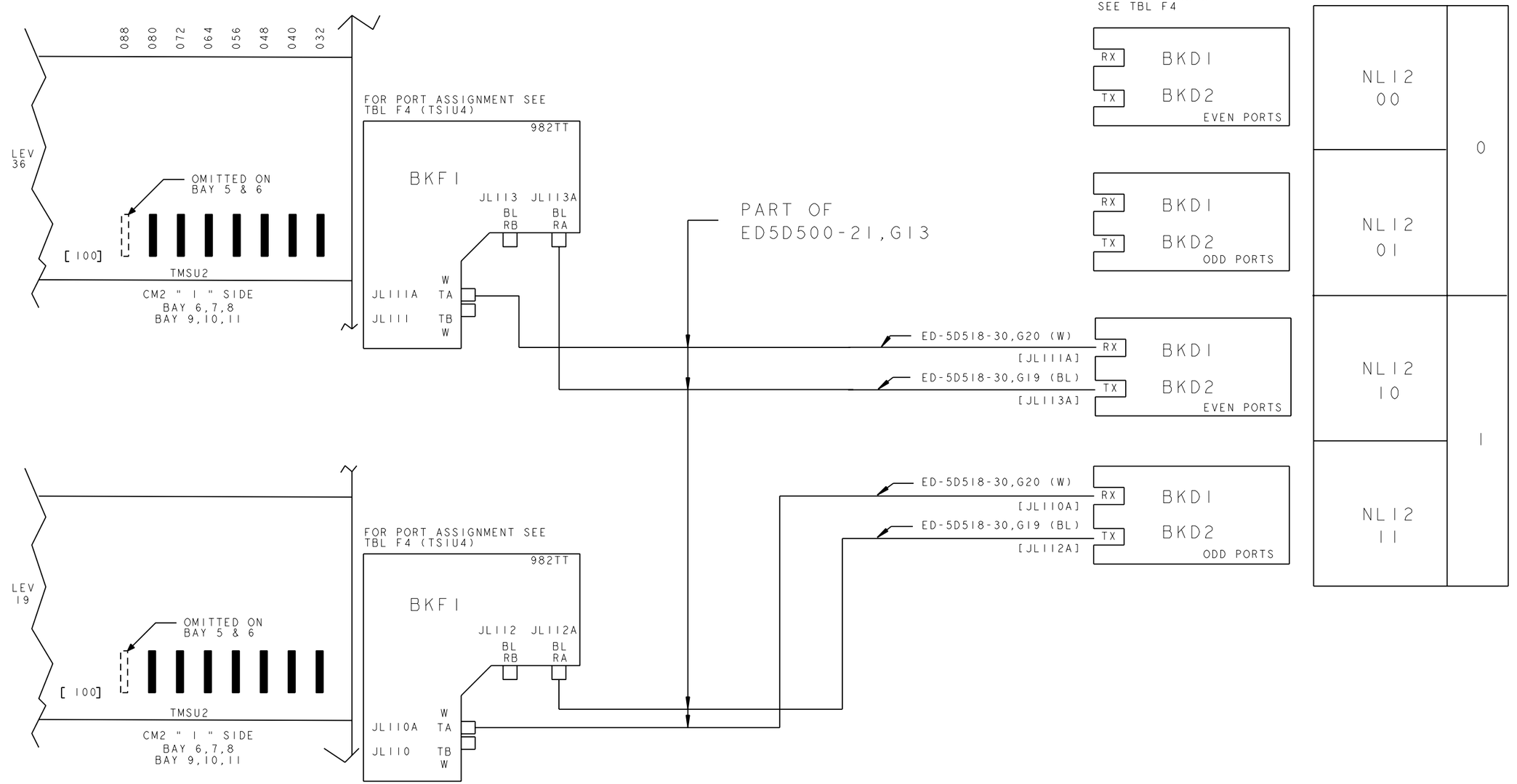

FIG. M8 CONT

NCT2 LINKS TO CM2 "I" SIDE
DUAL FABRIC
FROM SM2000,SMC CABINET E/W TSIU4

TITLE: INTERCABINET CABLING				
THIRD ANGLE PROJECTION	LUCENT TECHNOLOGIES - PROPRIETARY USE PURSUANT TO COMPANY INSTRUCTIONS			
Lucent Technologies Inc.	ED5D500-21	SHEET B51	ISSUE 112	DWG SIZE C2/AIR

ED5D500-21

LU.ISSUE2.FRM NOV 1999

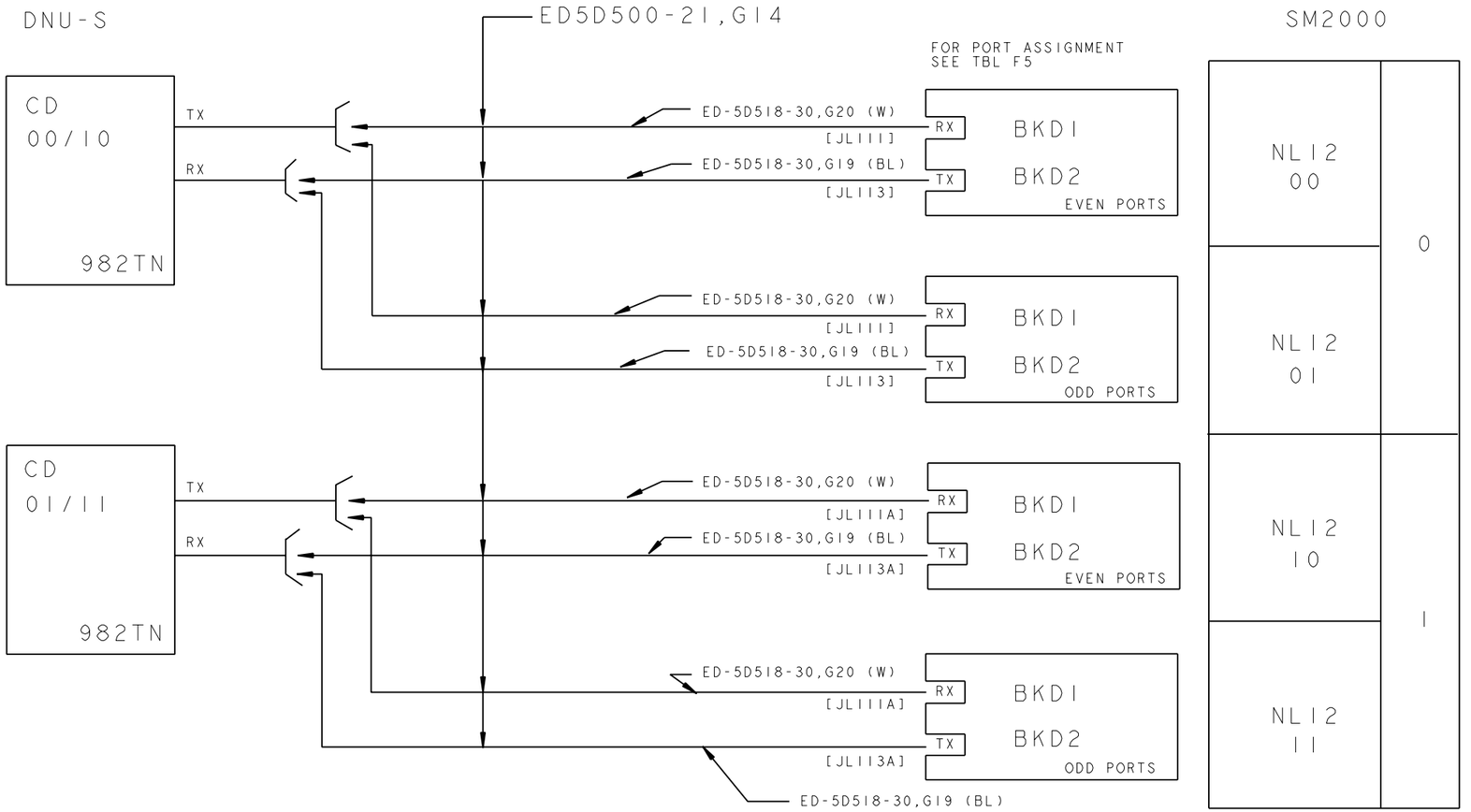

FIG. 9M

PCT LINKS ON DNU-S

FROM SM2000,SMC CABINET E/W TSIU4

TITLE: INTERCABINET CABLING				
THIRD ANGLE PROJECTION	LUCENT TECHNOLOGIES - PROPRIETARY USE PURSUANT TO COMPANY INSTRUCTIONS			
Lucent Technologies Inc.	ED5D500-21	SHEET B52	ISSUE 112	DWG SIZE C2/AIR

ED5D500-21

LU.ISSUE2.FRM NOV 1999

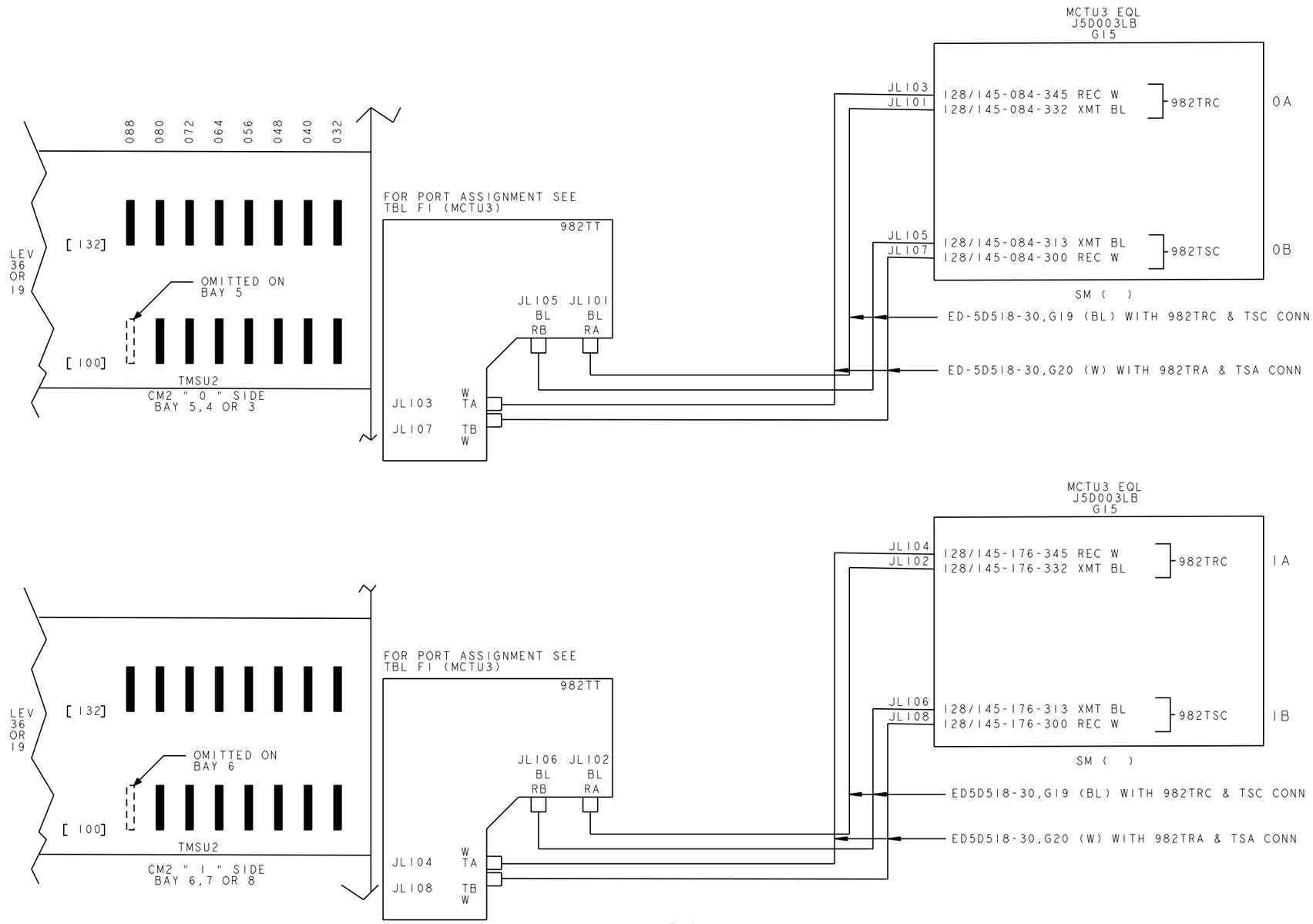

FIG. M10

ODL 50 NCT LINKS TO CM2
SINGLE FABRIC
WHEN SMC IS E/W MCTU3

TITLE: INTERCABINET CABLING				
THIRD ANGLE PROJECTION	LUCENT TECHNOLOGIES - PROPRIETARY USE PURSUANT TO COMPANY INSTRUCTIONS			
Lucent Technologies Inc.	ED5D500-21	SHEET B53	ISSUE 112	DWG SIZE C2/AIR

ED5D500-21

LU_ISSUE2.FRM NOV 1999

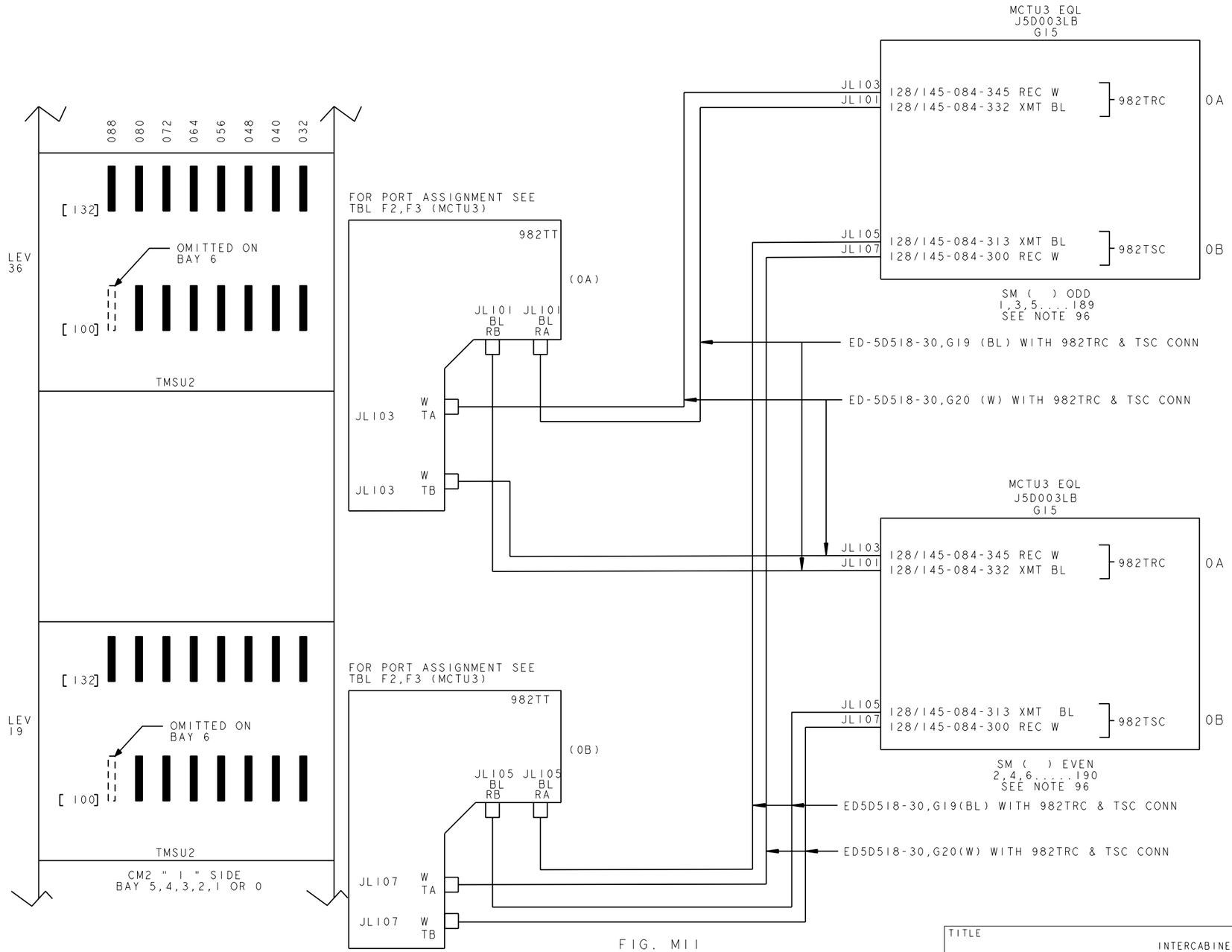

FIG. MII

ODL 50 NCT LINKS TO CM2 " 0 " SIDE
DUAL FABRIC
WHEN SMC IS E/W MCT3

TITLE: INTERCABINET CABLING

THIRD ANGLE PROJECTION

LUCENT TECHNOLOGIES - PROPRIETARY
USE PURSUANT TO COMPANY INSTRUCTIONS

Lucent Technologies Inc.

ED5D500-21

SHEET	ISSUE	DWG SIZE
B54	112	C2/AIR

ED5D500-21

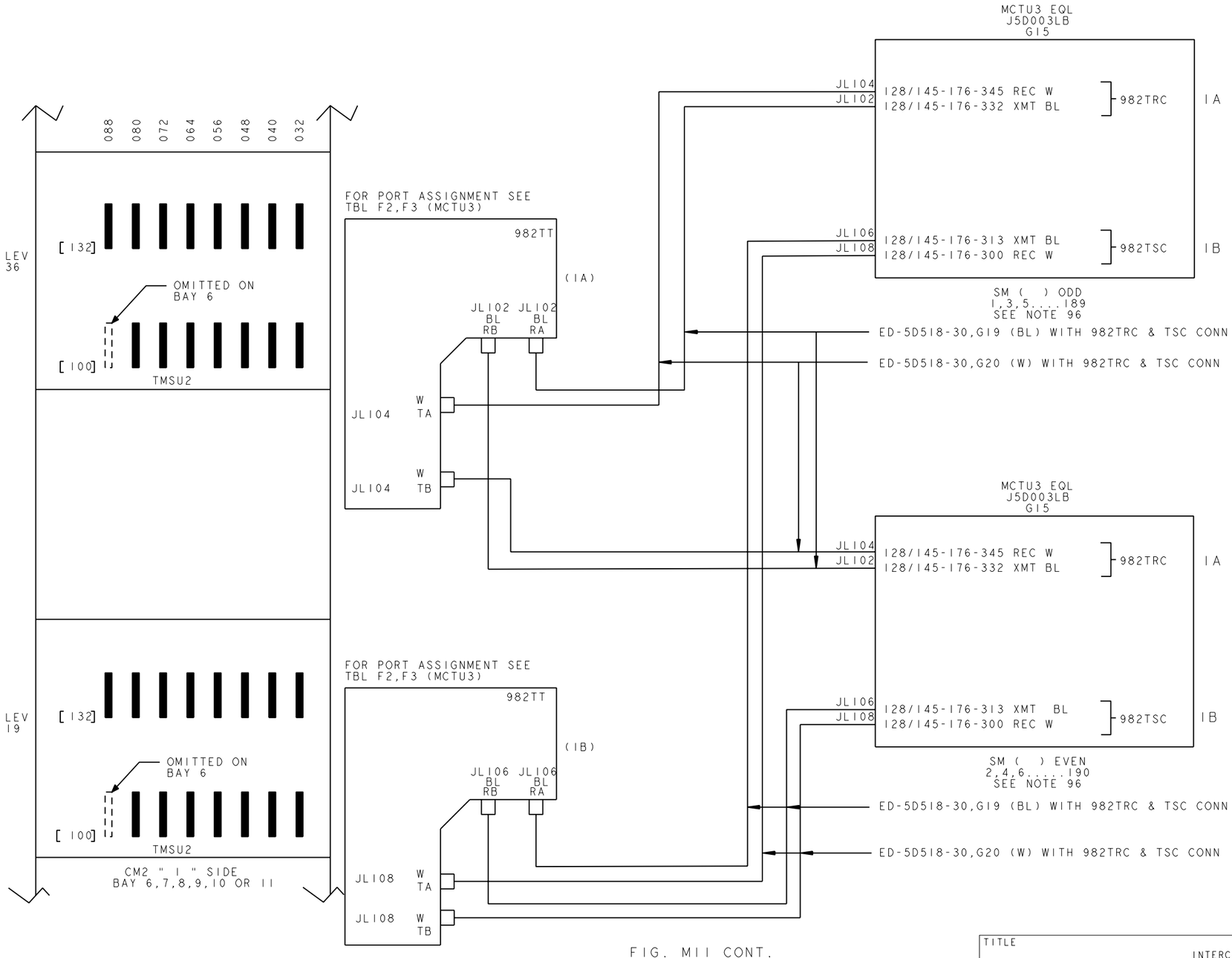

FIG. M11 CONT.

ODL 50 NCT LINKS TO CM2 " 1 " SIDE
DUAL FABRIC
WHEN SMC IS E/W MCTU3

TITLE: INTERCABINET CABLING					
THIRD ANGLE PROJECTION	LUCENT TECHNOLOGIES - PROPRIETARY USE PURSUANT TO COMPANY INSTRUCTIONS				
Lucent Technologies Inc.	ED5D500-21	SHEET B55	ISSUE 112	DWG SIZE C2/AIR	

ED5D500-21

LU_ISSUE2.FRM NOV 1999

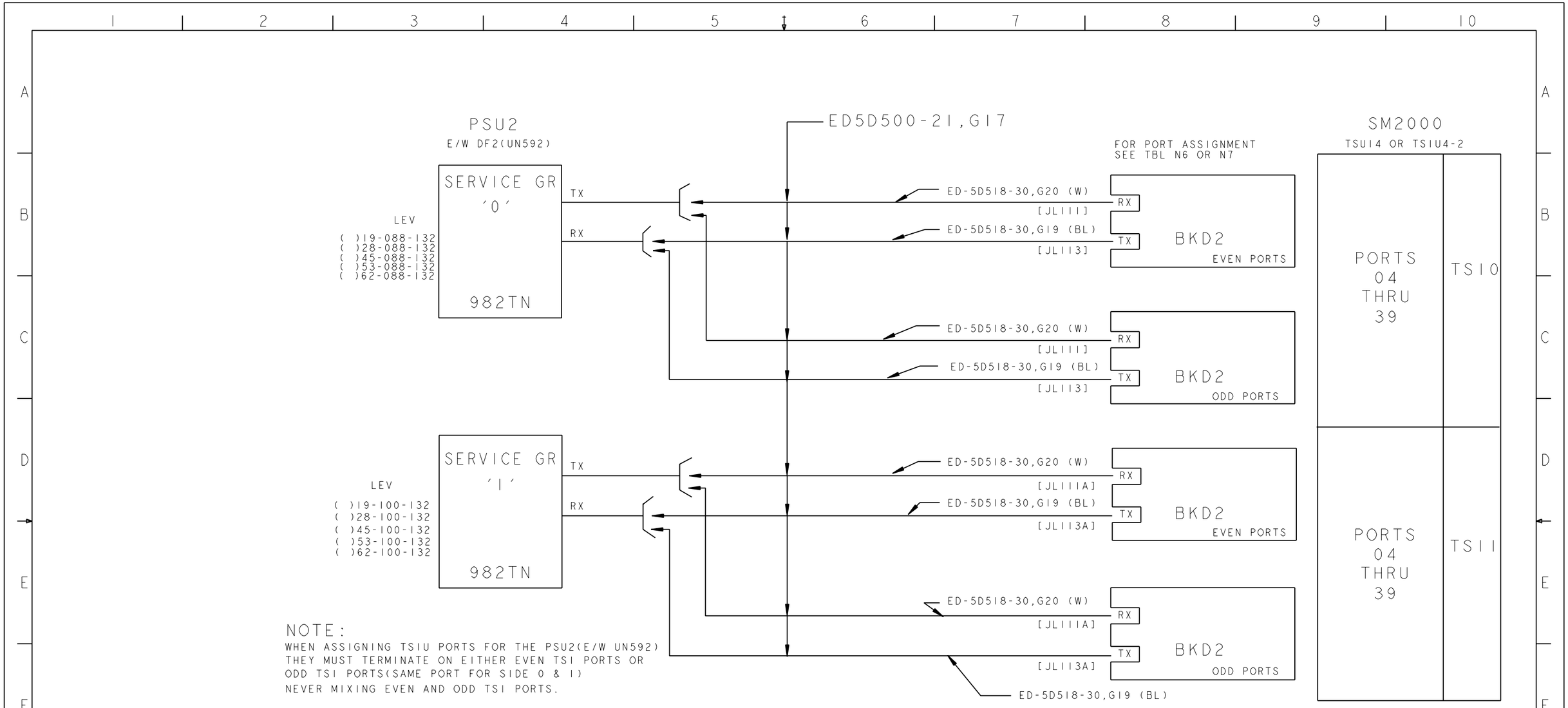

NOTE:
WHEN ASSIGNING TSIU PORTS FOR THE PSU2(E/W UN592)
THEY MUST TERMINATE ON EITHER EVEN TSI PORTS OR
ODD TSI PORTS(SAME PORT FOR SIDE 0 & 1)
NEVER MIXING EVEN AND ODD TSI PORTS.

FIG. MI2 (DA)
PCT LINKS ON PSU2
FROM SM2000,SMC CABINET E/W TSIU4 OR TSIU4-2

TITLE: INTERCABINET CABLING					
THIRD ANGLE PROJECTION	LUCENT TECHNOLOGIES - PROPRIETARY USE PURSUANT TO COMPANY INSTRUCTIONS				
Lucent Technologies Inc.	ED5D500-21	SHEET B56	ISSUE 112	DWG SIZE C2/AIR	

ED5D500-21

LU.ISSUE2.FRM NOV 1999

SIDE 1

SIDE 0

55	BKDI BKD2 DX CA TX RX PORT 39 183	BKDI BKD2 DX CA TX RX PORT 35 175	BKDI BKD2 DX CA TX RX PORT 31 167	BKDI BKD2 DX CA TX RX PORT 27 159	BKDI BKD2 DX CA TX RX PORT 23 151	BKDI BKD2 DX CA TX RX PORT 19 143	BKDI BKD2 DX CA TX RX PORT 15 135	BKDI BKD2 982YE TX RX PORT 11 127	BKDI BKD2 982YE TX RX PORT 07 119	BKDI TX RX PORT 03 111	BKDI BKD2 DX CA TX RX PORT 39 101	BKDI BKD2 DX CA TX RX PORT 35 093	BKDI BKD2 DX CA TX RX PORT 31 085	BKDI BKD2 DX CA TX RX PORT 27 077	BKDI BKD2 DX CA TX RX PORT 23 069	BKDI BKD2 DX CA TX RX PORT 19 061	BKDI BKD2 DX CA TX RX PORT 15 053	BKDI BKD2 982YE TX RX PORT 11 045	BKDI BKD2 982YE TX RX PORT 07 037	BKDI TX RX PORT 03 029	55
51	BKDI BKD2 DX CA TX RX PORT 38 183	BKDI BKD2 DX CA TX RX PORT 34 175	BKDI BKD2 DX CA TX RX PORT 30 167	BKDI BKD2 DX CA TX RX PORT 26 159	BKDI BKD2 DX CA TX RX PORT 22 151	BKDI BKD2 DX CA TX RX PORT 18 143	BKDI BKD2 982YE TX RX PORT 14 135	BKDI BKD2 982YE TX RX PORT 10 127	BKDI BKD2 982YE TX RX PORT 06 119	BKDI TX RX PORT 02 111	BKDI BKD2 DX CA TX RX PORT 38 101	BKDI BKD2 DX CA TX RX PORT 34 093	BKDI BKD2 DX CA TX RX PORT 30 085	BKDI BKD2 DX CA TX RX PORT 26 077	BKDI BKD2 DX CA TX RX PORT 22 069	BKDI BKD2 DX CA TX RX PORT 18 061	BKDI BKD2 DX CA TX RX PORT 14 053	BKDI BKD2 982YE TX RX PORT 10 045	BKDI BKD2 982YE TX RX PORT 06 037	BKDI TX RX PORT 02 029	51
47	BKDI BKD2 DX CA TX RX PORT 37 183	BKDI BKD2 DX CA TX RX PORT 33 175	BKDI BKD2 DX CA TX RX PORT 29 167	BKDI BKD2 DX CA TX RX PORT 25 159	BKDI BKD2 DX CA TX RX PORT 21 151	BKDI BKD2 DX CA TX RX PORT 17 143	BKDI BKD2 DX CA TX RX PORT 13 135	BKDI BKD2 DX CA TX RX PORT 09 127	BKDI BKD2 DX CA TX RX PORT 05 119	DX0 TX RX 111	BKDI BKD2 DX CA TX RX PORT 37 101	BKDI BKD2 DX CA TX RX PORT 33 093	BKDI BKD2 DX CA TX RX PORT 29 085	BKDI BKD2 DX CA TX RX PORT 25 077	BKDI BKD2 DX CA TX RX PORT 21 069	BKDI BKD2 DX CA TX RX PORT 17 061	BKDI BKD2 DX CA TX RX PORT 13 053	BKDI BKD2 DX CA TX RX PORT 09 045	BKDI BKD2 DX CA TX RX PORT 05 037	DX0 TX RX 029	47
43	BKDI BKD2 DX CA TX RX PORT 36 183	BKDI BKD2 DX CA TX RX PORT 32 175	BKDI BKD2 DX CA TX RX PORT 28 167	BKDI BKD2 DX CA TX RX PORT 24 159	BKDI BKD2 DX CA TX RX PORT 20 151	BKDI BKD2 DX CA TX RX PORT 16 143	BKDI BKD2 DX CA TX RX PORT 12 135	BKDI BKD2 DX CA TX RX PORT 08 127	BKDI BKD2 DX CA TX RX PORT 04 119		BKDI BKD2 DX CA TX RX PORT 36 101	BKDI BKD2 DX CA TX RX PORT 32 093	BKDI BKD2 DX CA TX RX PORT 28 085	BKDI BKD2 DX CA TX RX PORT 24 077	BKDI BKD2 DX CA TX RX PORT 20 069	BKDI BKD2 DX CA TX RX PORT 16 061	BKDI BKD2 DX CA TX RX PORT 12 053	BKDI BKD2 DX CA TX RX PORT 08 045	BKDI BKD2 DX CA TX RX PORT 04 037		43

EQUIP CODE
XMIT PORT
REC PORT
VERT EQL
PORT NUMBER
HORZ EQL

FIG. Z1

TSIU4-2 XMIT AND REC PORT LOCATIONS
FOR SM2000 NCT2/PCT LINKS

TITLE: INTERCABINET CABLING

THIRD ANGLE PROJECTION

LUCENT TECHNOLOGIES - PROPRIETARY
USE PURSUANT TO COMPANY INSTRUCTIONS

Lucent Technologies Inc.

ED5D500-21

SHEET	ISSUE	DWG SIZE
B57	112	C2/AIR

ED5D500-21

STOCKLIST

ITEM NBR	LIST GROUP CODE	QTY PER CODE	PRODUCT IDENTIFIER	CODE	DESCRIPTION	REFERENCE POSITION	NOTE SYM	NOTE NBR
10	4	4	ED5D518-30,G17		CABLE, FIBER-OPTIC LIGHTGUIDE ITEM 10,14,18,22			
15	4	4	ED5D518-30,G18		CABLE, FIBER-OPTIC LIGHTGUIDE ITEM 12,16,20,24			
20	4A	4	ED5D518-30,G17		CABLE, FIBER-OPTIC LIGHTGUIDE ITEM 30,34,38,42			
25	4A	4	ED5D518-30,G18		CABLE, FIBER-OPTIC LIGHTGUIDE ITEM 32,36,40,44			
28	4C	2	ED5D518-30,G17		CABLE, FIBER-OPTIC LIGHTGUIDE ITEM 70,80			
29	4C	2	ED5D518-30,G18		CABLE, FIBER-OPTIC LIGHTGUIDE ITEM 75,85			
195	8B	4	ED5D518-30,G17		CABLE, FIBER-OPTIC LIGHTGUIDE ITEM 410,412,414,416			
196	8B	4	ED5D518-30,G18		CABLE, FIBER-OPTIC LIGHTGUIDE ITEM 411,413,415,417			
197	8C	4	ED5D518-30,G17		CABLE, FIBER-OPTIC LIGHTGUIDE ITEM 420,422,424,426			
198	8C	4	ED5D518-30,G18		CABLE, FIBER-OPTIC LIGHTGUIDE ITEM 421,423,425,427			
199	8D	4	ED5D518-30,G17		CABLE, FIBER-OPTIC LIGHTGUIDE ITEM 430,432,434,436			
200	8D	4	ED5D518-30,G18		CABLE, FIBER-OPTIC LIGHTGUIDE ITEM 431,433,435,437			
201	8E	4	ED5D518-30,G17		CABLE, FIBER-OPTIC LIGHTGUIDE ITEM 440,442,444,446			
202	8E	4	ED5D518-30,G18		CABLE, FIBER-OPTIC LIGHTGUIDE ITEM 441,443,445,447			
235	10	4	ED5D518-30,G17		CABLE, FIBER-OPTIC LIGHTGUIDE ITEM 491,493,495,497			
236	10	4	ED5D518-30,G18		CABLE, FIBER-OPTIC LIGHTGUIDE ITEM 492,494,496,498			
237	10A	4	ED5D518-30,G17		CABLE, FIBER-OPTIC LIGHTGUIDE ITEM 501,503,505,507			
238	10A	4	ED5D518-30,G18		CABLE, FIBER-OPTIC LIGHTGUIDE ITEM 502,504,506,508			
242	12	4	ED5D518-30,G19		CABLE, FIBER-OPTIC LIGHTGUIDE ITEM 512,516,520,524			
243	12	4	ED5D518-30,G20		CABLE, FIBER-OPTIC LIGHTGUIDE ITEM 514,518,522,526			
246	12A	4	ED5D518-30,G19		CABLE, FIBER-OPTIC LIGHTGUIDE ITEM 528,532,536,540			
247	12A	4	ED5D518-30,G20		CABLE, FIBER-OPTIC LIGHTGUIDE ITEM 530,534,538,542			
250	12B	2	ED5D518-30,G19		CABLE, FIBER-OPTIC LIGHTGUIDE ITEM 544,548			
251	12B	2	ED5D518-30,G20		CABLE, FIBER-OPTIC LIGHTGUIDE ITEM 546,550			
255	12C	4	ED5D518-30,G19		CABLE, FIBER-OPTIC LIGHTGUIDE ITEM 551,553,555,557			
256	12C	4	ED5D518-30,G20		CABLE, FIBER-OPTIC LIGHTGUIDE ITEM 552,554,556,558			
260	12D	4	ED5D518-30,G19		CABLE, FIBER-OPTIC LIGHTGUIDE ITEM 559,561,563,565			
261	12D	4	ED5D518-30,G20		CABLE, FIBER-OPTIC LIGHTGUIDE ITEM 560,562,564,566			
265	12E	4	ED5D518-30,G19		CABLE, FIBER-OPTIC LIGHTGUIDE ITEM 567,569,571,573			
266	12E	4	ED5D518-30,G20		CABLE, FIBER-OPTIC LIGHTGUIDE ITEM 568,570,572,574			
270	12F	4	ED5D518-30,G19		CABLE, FIBER-OPTIC LIGHTGUIDE ITEM 575,577,579,581			

STOCKLIST CONTINUED ON SHEET D2

SHOP INST

MANUFACTURING NOTES

1. X PARTS REQUIRED FOR INSTALLATION.

   X/ PARTS REQUIRED FOR MANUFACTURE WHEN EQUIPMENT IS SHOP MOUNTED OR BY THE INSTALLER WHEN THE EQUIPMENT IS TO BE FIELD MOUNTED.

   * PARTS THAT ARE TO BE SHIPPED ATTACHED TO OR ENCLOSED IN THE SAME CONTAINER WITH THE ASSOCIATED ASSEMBLED ITEM.

   */ PARTS (A) REQUIRED FOR MANUFACTURE WHEN EQUIPMENT INVOLVED IS SHOP MOUNTED OR (B) TO BE SHIPPED ATTACHED TO, OR ENCLOSED IN THE SAME CONTAINER WITH THE ASSOCIATED ASSEMBLED ITEM WHEN FIELD MOUNTED.

   ( ) INDICATES DESIGNATIONS TO BE STAMPED IN ACCORDANCE WITH JOB INFORMATION.

   { } INDICATES DESIGNATIONS SHOWN FOR INFORMATION ONLY AND ARE NOT TO BE STAMPED.

   < > INDICATES DESIGNATIONS AND/OR INFORMATION PROVIDED IN ACCORDANCE WITH OTHER INFORMATION.

   "W" PARTS ASSEMBLED AT THE SAME TIME THE EQUIPMENT IS MOUNTED.

   "W*" PARTS TO BE (A) SHOP ASSEMBLED, BUT WHICH CANNOT BE ASSEMBLED UNTIL THE ASSOCIATED EQUIPMENT IS BEING MOUNTED, OR (B) SHIPPED ATTACHED TO, OR ENCLOSED IN THE SAME CONTAINER WITH THE ASSOCIATED EQUIPMENT WHEN FIELD MOUNTED.

   "S" PARTS NOT ASSEMBLED, SHIPPED SEPARATELY.

   A/R AS REQUIRED.

   "B" PARTIAL ASSEMBLIES ON OTHER DRAWINGS WITH STOCKLISTS.

101. 8.3 MICRON LIGHTGUIDE CABLE JL131 & JL132 (WHICH IS A PART OF GROUP 87 AND IS MANUFACTURED IN ATLANTA) SHALL BE ORDERED AS FOLLOW:
   (ONE) LS1A-A 180009185 LIGHTGUIDE CABLE INTERCONNECTION EQUIPPED WITH
   ('X' DIM) 2000A 103884904 LIGHTGUIDE CABLE PER EACH APPLICATION-ORM/HOST.
   ('X' DIM IS A CUMULATIVE LENGTH OF LABELS JL131 AND JL132. CABLE WILL BE CUT IN TWO AS REQD AND STUB END AT LGX WILL BE EQUIPPED WITH THE CONNECTOR PER CUSTOMER SPEC).
   EXAMPLE:
   (ONE) JL131 150 FEET IS REQD
   (ONE) JL132 150 FEET IS REQD
   LINE ENGINEER SHALL ORDER:
   (ONE) LS1A-A 180009185 EQUIPPED WITH 300 FEET OF 2000 A 103884904 LIGHTGUIDE CABLE.

102. 8.3 MICRON LIGHTGUIDE CABLE JL131 & JL132 (WHICH IS MANUFACTURED IN ATLANTA) SHALL BE ORDERED AS FOLLOWS:
   (TWO) LS1A-A 180009185 LIGHTGUIDE CABLE INTERCONNECTION EQUIPPED WITH ('X' DIM=JL131 & JL132) 2000A 103884904 LIGHTGUIDE CABLE FOR TWO CABLES OF (SPECIFY DIMENSION) EACH.
   EXAMPLE:
   (ONE) JL131 150 FEET IS REQD ('X' DIM)
   (ONE) JL132 150 FEET IS REQD ('X' DIM).
   LINE ENGINEER SHALL ORDER:
   (TWO) LS1A-A 180009185 LIGHTGUIDE CABLE INTERCONNECTION E/W 300 FEET 2000A 103884904 LIGHTGUIDE CABLE FOR TWO CABLES 150 FEET EACH.
   WHEN REQUIRED CABLE LENGTH FOR ONE CABLE IS 100 FEET OR LESS, LINE ENGINEER MAY ORDER 'STOCK' CABLE BY COMCODE AS SHOWN BELLOW:
   10' LS1A-A-10 104149224
   15' LS1A-A-15 104149232
   20' LS1A-A-20 104149729
   25' LS1A-A-25 104149240
   30' LS1A-A-30 104149257
   35' LS1A-A-35 104149265
   40' LS1A-A-40 104149687
   50' LS1A-A-50 104149695
   75' LS1A-A-75 104149703
   100' LS1A-A-100 104149719

COPYRIGHT @ 2001 LUCENT TECHNOLOGIES
ALL RIGHTS RESERVED

BT13

INTERCABINET CABLING
FOR
5ESS * SWITCH
*LUCENT TRADEMARK

DWG SIZE C2 | ISSUE 117

PRINTED IN U.S.A.

STOCKLIST

ITEM NBR	LIST GROUP CODE	QTY PER CODE	PRODUCT IDENTIFIER	CODE	DESCRIPTION	REFERENCE POSITION	NOTE SYM	NOTE NBR
271	12F	4	ED5D518-30,G20		CABLE, FIBER-OPTIC LIGHTGUIDE ITEM 576,578,580,582			
275	12G	4	ED5D518-30,G19		CABLE, FIBER-OPTIC LIGHTGUIDE ITEM 583,585,587,589			
276	12G	4	ED5D518-30,G20		CABLE, FIBER-OPTIC LIGHTGUIDE ITME 584,586,588,590			
280	12H	4	ED5D518-30,G19		CABLE, FIBER-OPTIC LIGHTGUIDE ITEM 591,593,595,597			
281	12H	4	ED5D518-30,G20		CABLE, FIBER-OPTIC LIGHTGUIDE ITEM 592,594,596,598			
283	13	4	ED5D518-30,G19		CABLE, FIBER-OPTIC LIGHTGUIDE ITEM 601,603,605,607			
284	13	4	ED5D518-30,G20		CABLE, FIBER-OPTIC LIGHTGUIDE ITEM 602,604,606,608			
285	14	2	ED5D518-30,G19		CABLE, FIBER-OPTIC LIGHTGUIDE ITEM 611,613			
286	14	2	ED5D518-30,G20		CABLE, FIBER-OPTIC LIGHTGUIDE ITEM 610,612			
287	15	4	ED5D518-30,G19		CABLE, FIBER-OPTIC LIGHTGUIDE ITEM 620,622,624,626			
288	15	4	ED5D518-30,G20		CABLE, FIBER-OPTIC LIGHTGUIDE ITEM 621,623,625,627			
292	17	2	ED5D518-30,G19		CABLE, FIBER-OPTIC LIGHTGUIDE ITEM 636,638			
293	17	2	ED5D518-30,G20		CABLE, FIBER-OPTIC LIGHTGUIDE ITEM 637,639			
296	18A	1	ED5D503-30,G351A		CABLE, CONNECTORIZED ITEM 664			
297	18A	1	ED5D503-30,G353A		CABLE, CONNECTORIZED ITEM 665			
298	18B	1	ED5D503-30,G351B		CABLE, CONNECTORIZED ITEM 666			
299	18B	1	ED5D503-30,G353B		CABLE, CONNECTORIZED ITEM 667			
300	19	1	ED5D503-30,G371		CABLE, CONNECTORIZED ITEM 668			
303	19	1	ED5D503-30,G373		CABLE, CONNECTORIZED ITEM 669			
305	20A	1	ED5D505-30,G171		CABLE, CONNECTORIZED ITEM 682			
310	20A	1	ED5D505-30,G173		CABLE, CONNECTORIZED ITEM 683			
320	20A	1	ED5D505-30,G175		CABLE, CONNECTORIZED ITEM 684			
330	20A	1	ED5D505-30,G177		CABLE, CONNECTORIZED ITEM 685			
340	20B	1	ED5D505-30,G179		CABLE, CONNECTORIZED ITEM 686			
350	20B	1	ED5D505-30,G181		CABLE, CONNECTORIZED ITEM 687			
360	20B	1	ED5D505-30,G183		CABLE, CONNECTORIZED ITEM 688			
370	20B	1	ED5D505-30,G185		CABLE, CONNECTORIZED ITEM 689			
372	20C	1	ED5D505-30,G179		CABLE, CONNECTORIZED ITEM 690			
374	20C	1	ED5D505-30,G181		CABLE, CONNECTORIZED ITEM 691			
376	20C	1	ED5D505-30,G183A		CABLE, CONNECTORIZED ITEM 692			
378	20C	1	ED5D505-30,G185A		CABLE, CONNECTORIZED ITEM 693			

******** STOCKLIST CONTINUED AT RIGHT *********

STOCKLIST

ITEM NBR	LIST GROUP CODE	QTY PER CODE	PRODUCT IDENTIFIER	CODE	DESCRIPTION	REFERENCE POSITION	NOTE SYM	NOTE NBR
500	22	1	ED5D505-30,G10		CABLE, CONNECTORIZED ITEM 700			
510	22B	1	ED5D505-30,G10B		CABLE, CONNECTORIZED ITEM 710			
600	23	1	ED5D505-30,G11		CABLE, CONNECTORIZED ITEM 0750			
610	23A	1	ED5D505-35,G11A		CABLE, CONNECTORIZED ITEM 0760			
620	24	1	ED5D505-30,G125		CABLE, CONNECTORIZED ITEM 0770			
630	27	1	ED5D505-30,G5		CABLE, CONNECTORIZED ITEM 0780			
655	28A	1	105412530	812A-4/26	CABLE 26 GAGE ITEM 810			
665	28C	1	ED5D621-35,G137		CABLE, CONNECTORIZED ASSEMBLY ITEM 817			82
666	28D	1	ED5D621-35,G137		CABLE, CONNECTORIZED ASSEMBLY ITEM 819			82
667	28D	1	ED5D621-35,G137		CABLE, CONNECTORIZED ASSEMBLY ITEM 820			82
668	28D	1	ED5D621-35,G137		CABLE, CONNECTORIZED ASSEMBLY ITEM 822			82
675	29	1	ED5D505-30,G163A		CABLE, CONNECTORIZED ITEM 828			
680	29A	1	ED5D505-30,G163A		CABLE, CONNECTORIZED ITEM 0830			
690	29A	1	ED5D505-30,G164		CABLE, CONNECTORIZED ITEM 0840			
701	31	1	ED5D505-30,G167		CABLE, CONNECTORIZED ITEM 0860			
702	31	1	ED5D505-30,G169		CABLE, CONNECTORIZED ITEM 0865			
704	32	1	ED5D621-35,G105A		CABLE, CONNECTORIZED ASSEMBLY ITEM 866			
706	33	1	ED5D621-35,G123		CABLE, CONNECTORIZED ASSEMBLY ITEM 867			
708	34	1	ED5D505-30,G231		CABLE, CONNECTORIZED ITEM 868			
709	34	1	ED5D505-30,G232		CABLE, CONNECTORIZED ITEM 869			
711	34A	1	ED5D505-30,G233		CABLE, CONNECTORIZED ITEM 875			
716	34B	1	ED5D505-30,G242		CABLE, CONNECTORIZED ITEM 881			
718	34C	1	ED5D505-30,G243		CABLE, CONNECTORIZED ITEM 882			
721	34D	1	ED5D505-30,G244		CABLE, CONNECTORIZED ITEM 891			
722	34D	1	ED5D505-30,G245		CABLE, CONNECTORIZED ITEM 892			

STOCKLIST CONTINUED ON SHEET D3

COPYRIGHT @ 2001 LUCENT TECHNOLOGIES
ALL RIGHTS RESERVED

BT13

INTERCABINET CABLING
FOR
5ESS * SWITCH
*LUCENT TRADEMARK

DWG SIZE C2 | ISSUE 117

LUCENT TECHNOLOGIES INC | ED5D500-21 | SHEET D2 OF 292

PRINTED IN U.S.A.

STOCKLIST

ITEM NBR	LIST GROUP CODE	QTY PER CODE	PRODUCT IDENTIFIER	CODE	DESCRIPTION	REFERENCE POSITION	NOTE SYM	NOTE NBR
725	34	1	ED5D505-30,G231		CABLE, CONNECTORIZED ITEM 868			
727	34CE	1	ED5D505-30,G230		CABLE, CONNECTORIZED ITEM 876			
728	34CF	1	ED5D505-30,G234		CABLE, CONNECTORIZED ITEM 877			
729	34CF	1	ED5D505-30,G235		CABLE, CONNECTORIZED ITEM 878			
748	35	1	ED5D505-30,G19		CABLE, CONNECTORIZED ITEM 0897			
749	35	1	ED5D505-30,G21		CABLE, CONNECTORIZED ITEM 0898			
750	35	1	ED5D505-30,G23		CABLE, CONNECTORIZED ITEM 0899			
760	35	1	ED5D505-30,G71		CABLE, CONNECTORIZED ITEM 0900			
770	35	1	ED5D505-30,G73		CABLE, CONNECTORIZED ITEM 0910			
780	35	1	ED5D505-30,G75		CABLE, CONNECTORIZED ITEM 0920			
790	35	1	ED5D505-30,G77		CABLE, CONNECTORIZED ITEM 0930			
800	35	1	ED5D505-30,G79		CABLE, CONNECTORIZED ITEM 0940			
810	35	1	ED5D505-30,G81		CABLE, CONNECTORIZED ITEM 0950			
820	35	1	ED5D505-30,G83		CABLE, CONNECTORIZED ITEM 0960			
830	35	1	ED5D505-30,G85		CABLE, CONNECTORIZED ITEM 0970			
840	35	1	ED5D505-30,G87		CABLE, CONNECTORIZED ITEM 0980			
850	35	1	ED5D505-30,G89		CABLE, CONNECTORIZED ITEM 1000			
860	35	1	ED5D505-30,G91		CABLE, CONNECTORIZED ITEM 1010			
870	35	1	ED5D505-30,G93		CABLE, CONNECTORIZED ITEM 1020			
880	35	1	ED5D505-30,G95		CABLE, CONNECTORIZED ITEM 1030			
890	35	1	ED5D505-30,G97		CABLE, CONNECTORIZED ITEM 1040			
900	35	1	ED5D505-30,G99		CABLE, CONNECTORIZED ITEM 1050			
910	35	1	ED5D505-30,G101		CABLE, CONNECTORIZED ITEM 1060			
920	35	1	ED5D505-30,G103		CABLE, CONNECTORIZED ITEM 1070			
930	35	1	ED5D505-30,G105		CABLE, CONNECTORIZED ITEM 1080			
940	35	1	ED5D505-30,G107		CABLE, CONNECTORIZED ITEM 1090			
950	35	1	ED5D505-30,G109		CABLE, CONNECTORIZED ITEM 1100			
960	35	1	ED5D505-30,G193		CABLE, CONNECTORIZED ITEM 1110			
970	35	1	ED5D505-30,G211		CABLE, CONNECTORIZED ITEM 1120			
980	35	1	ED5D505-30,G212		CABLE, CONNECTORIZED ITEM 1130			
990	35A	1	ED5D505-30,G215		CABLE, CONNECTORIZED ITEM 1150			

******** STOCKLIST CONTINUED AT RIGHT *********

STOCKLIST

ITEM NBR	LIST GROUP CODE	QTY PER CODE	PRODUCT IDENTIFIER	CODE	DESCRIPTION	REFERENCE POSITION	NOTE SYM	NOTE NBR
~~1000~~	~~35A~~	~~1~~	~~101925162~~	~~285A~~	~~CABLE,SWITCHBOARD~~			~~59~~
1110	35B	1	ED5D505-30,G15		CABLE, CONNECTORIZED ITEM 1160			
1120	35B	1	ED5D505-30,G191		CABLE, CONNECTORIZED ITEM 1170			
1125	35C	1	ED5D505-30,G217		CABLE, CONNECTORIZED ITEM 1175			
1126	35CE	1	ED5D505-30,G19		CABLE, CONNECTORIZED ITEM 1176			
1127	35CE	1	ED5D505-30,G21		CABLE, CONNECTORIZED ITEM 1177			
1128	35CE	1	ED5D505-30,G23		CABLE, CONNECTORIZED ITEM 1178			
1129	35CE	1	ED5D505-30,G73A		CABLE, CONNECTORIZED ITEM 1179			
1130	35CE	1	ED5D505-30,G89A		CABLE, CONNECTORIZED ITEM 1180			
1133	35CE	1	ED5D505-30,G193		CABLE, CONNECTORIZED ITEM 1183			
1134	35CE	1	ED5D505-30,G211		CABLE, CONNECTORIZED ITEM 1184			
1135	35CE	1	ED5D505-30,G212		CABLE, CONNECTORIZED ITEM 1185			
1136	35CG	1	ED5D505-30,G105B		CABLE, CONNECTORIZED ITEM 1190			
1137	35CG	1	ED5D505-30,G109B		CABLE, CONNECTORIZED ITEM 1191			
1139	35CH	1	ED5D505-30,G105A		CABLE, CONNECTORIZED ITEM 1187			
1140	35CH	1	ED5D505-30,G109A		CABLE, CONNECTORIZED ITEM 1188			
1143	36	1	ED5D505-30,G13		CABLE, CONNECTORIZED ITEM 1200			
1145	36C	1	ED5D505-30,G218		CABLE, CONNECTORIZED ITEM 1215			
1150	37	1	ED5D517-30,G1		ASSEMBLY, CONNECTORIZED CABLE ITEM 1220			
1160	38	1	ED5D517-30,G2		ASSEMBLY, CONNECTORIZED CABLE ITEM 1230			
1161	38A	2	ED3T076-20,G51		ASSEMBLY, CONNECTORIZED SWBD CABLE ITEM 1231,1232			
1163	38B	1	ED5D621-35,G147B		CABLE, CONNECTORIZED ASSEMBLY ITEM 1233			162
1170	39	1	ED5D517-30,G3		ASSEMBLY, CONNECTORIZED CABLE ITEM 1240			
1173	39C	1	ED5D517-30,G3A		ASSEMBLY, CONNECTORIZED CABLE ITEM 1243			
1174	39D	1	ED5D517-30,G15A		ASSEMBLY, CONNECTORIZED CABLE ITEM 1244			
1175	39E	1	ED5D517-30,G22		ASSEMBLY, CONNECTORIZED CABLE ITEM 1245			

STOCKLIST CONTINUED ON SHEET D4

COPYRIGHT @ 2001 LUCENT TECHNOLOGIES
ALL RIGHTS RESERVED

BT13

INTERCABINET CABLING
FOR
5ESS * SWITCH
*LUCENT TRADEMARK

DWG SIZE C2 | ISSUE 117

LUCENT TECHNOLOGIES INC | ED5D500-21 | SHEET D3 OF 292

PRINTED IN U.S.A.

STOCKLIST

ITEM NBR	LIST GROUP CODE	QTY PER CODE	PRODUCT IDENTIFIER	CODE	DESCRIPTION	REFERENCE POSITION	NOTE SYM	NOTE NBR
1176	39F	1	ED3T076-20,G52		ASSEMBLY, CONNECTORIZED SWBD CABLE ITEM 1246			
1177	39G	1	ED3T076-20,G41A		ASSEMBLY, CONNECTORIZED SWBD CABLE ITEM 1247			
1178	39H	1	ED3T076-20,G53		ASSEMBLY, CONNECTORIZED SWBD CABLE ITEM 1248			
1179	39J	1	ED3T076-20,G41A		ASSEMBLY, CONNECTORIZED SWBD CABLE ITEM 1249 REPL: ED3T076-30, G53A			
1180	40	1	ED5D517-30,G4		ASSEMBLY, CONNECTORIZED CABLE ITEM 1250			
1181	39K	1	ED3T076-20,G55		ASSEMBLY, CONNECTORIZED SWBD CABLE ITEM 1251			
1210	41C	1	ED5D505-30,G159		CABLE, CONNECTORIZED ITEM 1280			
1220	41D	1	ED5D505-30,G159A		CABLE, CONNECTORIZED ITEM 1290			
1222	41E	1	ED5D505-30,G159B		CABLE, CONNECTORIZED ITEM 1295			
1240	42A	1	ED5D505-30,G161		CABLE, CONNECTORIZED ITEM 1310			
1250	42B	1	ED5D505-30,G161A		CABLE, CONNECTORIZED ITEM 1320			
1260	42C	1	ED5D505-30,G161B		CABLE, CONNECTORIZED ITEM 1330			
1270	42D	1	ED5D505-30,G161C		CABLE, CONNECTORIZED ITEM 1340			
1272	42E	1	ED5D505-30,G161D		CABLE, CONNECTORIZED ITEM 1342			
1274	42F	1	ED5D505-30,G161E		CABLE, CONNECTORIZED ITEM 1344			
1276	42G	1	ED5D505-30,G161F		CABLE, CONNECTORIZED ITEM 1346			
1278	42H	1	ED5D505-30,G161G		CABLE, CONNECTORIZED ITEM 1348			
1280	42J	1	ED5D505-30,G161H		CABLE, CONNECTORIZED ITEM 1350			
1290	43	1	ED5D517-30,G5		ASSEMBLY, CONNECTORIZED CABLE ITEM 1360			
1300	43A	1	ED5D517-30,G12		ASSEMBLY, CONNECTORIZED CABLE ITEM 1370			
1301	43D	1	ED3T076-20,G54		ASSEMBLY, CONNECTORIZED SWBD CABLE ITEM 1371			
1305	43B	1	ED5D517-30,G5B		ASSEMBLY, CONNECTORIZED CABLE ITEM 1375			
1306	43C	1	ED3T076-20,G50		ASSEMBLY, CONNECTORIZED SWBD CABLE ITEM 1376			
1310	44	1	ED5D505-30,G187		CABLE, CONNECTORIZED ITEM 1380			
1320	44	1	ED5D505-30,G189		CABLE, CONNECTORIZED ITEM 1390			
1322	44A	1	ED5D505-30,G188A		CABLE, CONNECTORIZED ITEM 1392			
1324	44B	1	ED5D505-30,G188B		CABLE, CONNECTORIZED ITEM 1394			
1326	44C	1	ED5D505-30,G188C		CABLE, CONNECTORIZED ITEM 1396			
1327	44D	1	ED5D505-30,G188D		CABLE, CONNECTORIZED ITEM 1397			
1328	44E	1	ED5D505-30,G188E		CABLE, CONNECTORIZED ITEM 1398			

******** STOCKLIST CONTINUED AT RIGHT *********

STOCKLIST

ITEM NBR	LIST GROUP CODE	QTY PER CODE	PRODUCT IDENTIFIER	CODE	DESCRIPTION	REFERENCE POSITION	NOTE SYM	NOTE NBR
1329	44F	1	ED5D505-30,G188F		CABLE, CONNECTORIZED ITEM 1399			
1330	45	1	ED5D505-30,G31		CABLE, CONNECTORIZED ITEM 1400			
1340	45	1	ED5D505-30,G33		CABLE, CONNECTORIZED ITEM 1410			
1350	45	1	ED5D505-30,G35		CABLE, CONNECTORIZED ITEM 1420			
1360	45	1	ED5D505-30,G37		CABLE, CONNECTORIZED ITEM 1430			
1370	45	1	ED5D505-30,G39		CABLE, CONNECTORIZED ITEM 1440			
1380	45	1	ED5D505-30,G41		CABLE, CONNECTORIZED ITEM 1450			
1390	45	1	ED5D505-30,G43		CABLE, CONNECTORIZED ITEM 1460			
1400	45	1	ED5D505-30,G45		CABLE, CONNECTORIZED ITEM 1470			
1410	45	1	ED5D505-30,G47		CABLE, CONNECTORIZED ITEM 1480			
1420	45	1	ED5D505-30,G49		CABLE, CONNECTORIZED ITEM 1490			
1430	45	1	ED5D505-30,G51		CABLE, CONNECTORIZED ITEM 1500			
1440	45	1	ED5D505-30,G53		CABLE, CONNECTORIZED ITEM 1510			
1450	45	1	ED5D505-30,G55		CABLE, CONNECTORIZED ITEM 1520			
1460	45	1	ED5D505-30,G57		CABLE, CONNECTORIZED ITEM 1530			
1470	45	1	ED5D505-30,G59		CABLE, CONNECTORIZED ITEM 1540			
1480	45	1	ED5D505-30,G61		CABLE, CONNECTORIZED ITEM 1550			
1490	45	1	ED5D505-30,G119		CABLE, CONNECTORIZED ITEM 1560			
1500	45	1	ED5D505-30,G121		CABLE, CONNECTORIZED ITEM 1570			
1510	45	1	ED5D505-30,G123		CABLE, CONNECTORIZED ITEM 1580			
1515	45A	1	ED5D505-30,G237		CABLE, CONNECTORIZED ITEM 1582			
1517	45A	1	ED5D505-30,G239		CABLE, CONNECTORIZED ITEM 1584			
1519	45A	1	ED5D505-30,G241		CABLE, CONNECTORIZED ITEM 1586			
1530	46	1	105412498	808A32/26	CABLE,ELECTRONIC 26GA CONVENIENT LENGTH PACKAGES UL LISTED CMR ITEM 1590			155
1540	46A	1	105412498	808A32/26	CABLE,ELECTRONIC 26GA CONVENIENT LENGTH PACKAGES UL LISTED CMR ITEM 1595			155

STOCKLIST CONTINUED ON SHEET D5

COPYRIGHT @ 2001 LUCENT TECHNOLOGIES
ALL RIGHTS RESERVED

BT13

INTERCABINET CABLING
FOR
5ESS * SWITCH
*LUCENT TRADEMARK

DWG SIZE C2 | ISSUE 117

LUCENT TECHNOLOGIES INC | ED5D500-21 | SHEET D4 OF 292

PRINTED IN U.S.A.

STOCKLIST

ITEM NBR	LIST GROUP CODE	QTY PER CODE	PRODUCT IDENTIFIER	CODE	DESCRIPTION	REFERENCE POSITION	NOTE SYM	NOTE NBR
1550	46B	1	105393888	761A1	CABLE,ELECTRONIC 24 GA, 1 PR ITEM 1600			
1560	46C	1	105412530	812A-4/26	CABLE 26 GAGE ITEM 1605			156
1600	50	1	ED5D503-30,G39		CABLE, CONNECTORIZED ITEM 1700			
1610	51	1	ED5D503-30,G40		CABLE, CONNECTORIZED ITEM 1710			
1640	54	1	ED5D502-30,G2		CABLE, CONNECTORIZED ITEM 1740			
1650	54	1	ED5D502-30,G3		CABLE, CONNECTORIZED ITEM 1750			
1651	54	1	ED5D502-30,G20		CABLE, CONNECTORIZED ITEM 1751			
1653	54A	1	ED5D502-30,G19		CABLE, CONNECTORIZED ITEM 1755			
1660	55	1	ED5D517-30,G6		ASSEMBLY, CONNECTORIZED CABLE ITEM 1760			
1670	56	1	ED5D517-30,G9		ASSEMBLY, CONNECTORIZED CABLE ITEM 1770			
1680	56A	1	ED5D517-30,G9A		ASSEMBLY, CONNECTORIZED CABLE ITEM 1780			
1710	60	1	ED5D502-30,G10		CABLE, CONNECTORIZED ITEM 1810			
1720	61	1	ED5D502-30,G11		CABLE, CONNECTORIZED ITEM 1820			
1750	63	1	ED5D502-30,G13		CABLE, CONNECTORIZED ITEM 1840			
1751	63A	1	ED3T076-20,G56		ASSEMBLY, CONNECTORIZED SWBD CABLE ITEM 1841			
1752	63B	1	ED3T076-20,G57		ASSEMBLY, CONNECTORIZED SWBD CABLE ITEM 1842			
1753	63C	1	ED3T076-20,G58		ASSEMBLY, CONNECTORIZED SWBD CABLE ITEM 1843			
1760	64	1	ED5D502-30,G14		CABLE, CONNECTORIZED ITEM 1845			
1770	65	1	ED5D502-30,G15		CABLE, CONNECTORIZED ITEM 1850			
1780	66	1	ED5D502-30,G16		CABLE, CONNECTORIZED ITEM 1855			
1781	66A	1	ED3T076-20,G56A		ASSEMBLY, CONNECTORIZED SWBD CABLE ITEM 1856			
1782	66B	1	ED3T076-20,G57A		ASSEMBLY, CONNECTORIZED SWBD CABLE ITEM 1857			
1783	66C	1	ED3T076-20,G58A		ASSEMBLY, CONNECTORIZED SWBD CABLE ITEM 1858			
1790	67	1	ED5D502-30,G17		CABLE, CONNECTORIZED ITEM 1860			
1795	67A	1	ED5D502-30,G17A		CABLE, CONNECTORIZED ITEM 1861			
1800	68	1	ED5D502-30,G18		CABLE, CONNECTORIZED ITEM 1865			
1805	68A	1	ED5D502-30,G18A		CABLE, CONNECTORIZED ITEM 1866			
1810	69	1	ED5D517-30,G13		ASSEMBLY, CONNECTORIZED CABLE ITEM 1870			
1820	70	1	ED5D517-30,G14		ASSEMBLY, CONNECTORIZED CABLE ITEM 1880			
1830	71	1	ED5D517-30,G15		ASSEMBLY, CONNECTORIZED CABLE ITEM 1890			

******** STOCKLIST CONTINUED AT RIGHT *********

STOCKLIST

ITEM NBR	LIST GROUP CODE	QTY PER CODE	PRODUCT IDENTIFIER	CODE	DESCRIPTION	REFERENCE POSITION	NOTE SYM	NOTE NBR
1840	72	1	ED5D517-30,G16		ASSEMBLY, CONNECTORIZED CABLE ITEM 1900			
1920	72B	1	105412530	812A-4/26	CABLE 26 GAGE ITEM 1920			
1921	72C	1	ED3T076-20,G62		ASSEMBLY, CONNECTORIZED SWBD CABLE ITEM 1921			
1922	73	1	ED3T076-20,G59		ASSEMBLY, CONNECTORIZED SWBD CABLE ITEM 1922			
1923	74	1	ED3T076-20,G60		ASSEMBLY, CONNECTORIZED SWBD CABLE ITEM 1923			
1924	75	1	ED3T076-20,G61		ASSEMBLY, CONNECTORIZED SWBD CABLE ITEM 1924			
1925	76	1	ED5D505-30,G250		CABLE, CONNECTORIZED ITEM 1925			
1926	77	1	ED5D505-30,G251		CABLE, CONNECTORIZED ITEM 1926			
1930	78	1	ED5D803-36,G22		ASSEMBLY, CABLE ITEM 1930			
1940	78	1	ED5D803-36,G22A		ASSEMBLY, CABLE ITEM 1940			
1950	79	1	ED3T076-20,G65		ASSEMBLY, CONNECTORIZED SWBD CABLE ITEM 1945			
2000	80	1	ED5D503-30,G343		CABLE, CONNECTORIZED ITEM 2010			
2010	80	1	ED5D503-30,G344		CABLE, CONNECTORIZED ITEM 2030			
2020	80	1	ED5D503-30,G345		CABLE, CONNECTORIZED ITEM 2000			
2030	80	1	ED5D503-30,G346		CABLE, CONNECTORIZED ITEM 2020			
2040	80	1	ED5D503-30,G347		CABLE, CONNECTORIZED ITEM 2040			
2050	80	1	ED5D503-30,G348		CABLE, CONNECTORIZED ITEM 2050			
2060	80	1	ED5D503-30,G349		CABLE, CONNECTORIZED ITEM 2060			
2070	80	1	ED5D503-30,G350		CABLE, CONNECTORIZED ITEM 2070			
2080	80A	1	ED5D503-30,G355		CABLE, CONNECTORIZED ITEM 2080			
2090	80A	1	ED5D503-30,G356		CABLE, CONNECTORIZED ITEM 2090			
2100	80B	1	ED5D503-30,G357		CABLE, CONNECTORIZED ITEM 2100			
2110	80B	1	ED5D503-30,G358		CABLE, CONNECTORIZED ITEM 2120			
2120	80B	1	ED5D503-30,G359		CABLE, CONNECTORIZED ITEM 2110			
2130	80B	1	ED5D503-30,G360		CABLE, CONNECTORIZED ITEM 2130			

STOCKLIST CONTINUED ON SHEET D6

COPYRIGHT @ 2001 LUCENT TECHNOLOGIES
ALL RIGHTS RESERVED

BT13

INTERCABINET CABLING
FOR
5ESS * SWITCH
*LUCENT TRADEMARK

DWG SIZE C2 | ISSUE 117

LUCENT TECHNOLOGIES INC | ED5D500-21 | SHEET D5 OF 292

PRINTED IN U.S.A.

STOCKLIST

ITEM NBR	LIST GROUP CODE	QTY PER CODE	PRODUCT IDENTIFIER	CODE	DESCRIPTION	REFERENCE POSITION	NOTE SYM	NOTE NBR
2140	80C	1	ED5D503-30,G361		CABLE, CONNECTORIZED ITEM 2140			
2150	80C	1	ED5D503-30,G363		CABLE, CONNECTORIZED ITEM 2150			
2160	80D	1	ED5D503-30,G365		CABLE, CONNECTORIZED ITEM 2160			
2170	80D	1	ED5D503-30,G367		CABLE, CONNECTORIZED ITEM 2170			
2180	80E	1	ED5D503-30,G357A		CABLE, CONNECTORIZED ITEM 2180			
2185	80E	1	ED5D503-30,G358A		CABLE, CONNECTORIZED ITEM 2190			
2190	80E	1	ED5D503-30,G359A		CABLE, CONNECTORIZED ITEM 2185			
2195	80E	1	ED5D503-30,G360A		CABLE, CONNECTORIZED ITEM 2195			
2196	80F	1	ED5D503-30,G350A		CABLE, CONNECTORIZED ITEM 2196			
2200	85	4	ED5D505-30,G221		CABLE, CONNECTORIZED ITEM 2200			
2210	85	4	ED5D505-30,G221A		CABLE, CONNECTORIZED ITEM 2210			
2220	85	4	ED5D505-30,G222		CABLE, CONNECTORIZED ITEM 2220			
2230	85	4	ED5D505-30,G222A		CABLE, CONNECTORIZED ITEM 2230			
2240	85	1	845620996		ASSEMBLY,BUSBAR COAX FEED THRU			98
2242	85A	4	ED5D505-30,G221B		CABLE, CONNECTORIZED ITEM 2235			
2243	85A	4	ED5D505-30,G221C		CABLE, CONNECTORIZED ITEM 2236			
2244	85A	4	ED5D505-30,G222B		CABLE, CONNECTORIZED ITEM 2237			
2245	85A	4	ED5D505-30,G222C		CABLE, CONNECTORIZED ITEM 2238			
2246	85A	1	845623925		ASSEMBLY,BUSBAR COAX FEED THRU			98
2249	86	8	ED5D505-30,G223		CABLE, CONNECTORIZED ITEM 2240			
2250	86	8	ED5D505-30,G223A		CABLE, CONNECTORIZED ITEM 2245			
2251	86,86A	1	845623925		ASSEMBLY,BUSBAR COAX FEED THRU			98
2252	86A	8	ED5D505-30,G225		CABLE, CONNECTORIZED ITEM 2246			
2253	86A	8	ED5D505-30,G225A		CABLE, CONNECTORIZED ITEM 2247			
2310	100	1	ED5D503-32,G100		ASSEMBLY, CONNECTORIZED CABLE ITEM 2310			
3000	103	2	ED5D129-30,G1		CABLE, CONNECTORIZED ITEM 2400,2410			
3010	104	1	ED5D503-30,G53		CABLE, CONNECTORIZED ITEM 2420			
3012	104A	1	ED5D503-30,G53A		CABLE, CONNECTORIZED ITEM 2425			
3015	104B	1	ED5D503-30,G53B		CABLE, CONNECTORIZED ITEM 2426			
3020	105	1	ED5D503-30,G54		CABLE, CONNECTORIZED ITEM 2430			
3025	105A	1	ED5D503-30,G54A		CABLE, CONNECTORIZED ITEM 2435			

******** STOCKLIST CONTINUED AT RIGHT *********

STOCKLIST

ITEM NBR	LIST GROUP CODE	QTY PER CODE	PRODUCT IDENTIFIER	CODE	DESCRIPTION	REFERENCE POSITION	NOTE SYM	NOTE NBR
3027	105B	1	ED5D503-30,G54B		CABLE, CONNECTORIZED ITEM 2436			
3030	106	1	ED5D503-30,G50		CABLE, CONNECTORIZED ITEM 2440			
3040	106	1	ED5D503-30,G51		CABLE, CONNECTORIZED ITEM 2450			
3050	107	1	ED5D503-30,G42		CABLE, CONNECTORIZED ITEM 2460			
3060	109	1	ED5D503-30,G41		CABLE, CONNECTORIZED ITEM 2470			
3070	109A	1	ED5D503-30,G41A		CABLE, CONNECTORIZED ITEM 2480			
3080	110	1	ED5D503-30,G44		CABLE, CONNECTORIZED ITEM 2490			
3081	36D	1	ED5D505-30,G112		CABLE, CONNECTORIZED ITEM 1217			
3082	36D	1	ED5D505-30,G112A		CABLE, CONNECTORIZED ITEM 1218			
3083	36D	1	ED5D505-30,G114		CABLE, CONNECTORIZED ITEM 1219			
3084	36E	1	ED5D505-30,G113		CABLE, CONNECTORIZED ITEM 1220			
3085	36E	1	ED5D505-30,G113A		CABLE, CONNECTORIZED ITEM 1221			
3086	36E	1	ED5D505-30,G114		CABLE, CONNECTORIZED ITEM 1222			
3090	120	1	ED5D503-30,G102		CABLE, CONNECTORIZED ITEM 2610			
3100	120	1	ED5D503-30,G101		CABLE, CONNECTORIZED ITEM 2600			
3110	120A	1	ED5D503-35,G101A		CABLE, CONNECTORIZED ASSEMBLY ITEM 2620			
3120	120A	1	ED5D503-35,G102A		CABLE, CONNECTORIZED ASSEMBLY ITEM 2630			
3125	121	1	ED5D503-32,G103		ASSEMBLY, CONNECTORIZED CABLE ITEM 2635			
3126	121	1	ED5D503-32,G104		ASSEMBLY, CONNECTORIZED CABLE ITEM 2636			
3127	121B	1	ED5D503-32,G103B		ASSEMBLY, CONNECTORIZED CABLE ITEM 2637			
3128	121B	1	ED5D503-32,G104B		ASSEMBLY, CONNECTORIZED CABLE ITEM 2638			
3130	122	1	ED5D503-30,G33		CABLE, CONNECTORIZED ITEM 2640			
3135	122A	1	ED5D503-30,G33A		CABLE, CONNECTORIZED ITEM 2645			
3140	123	1	ED5D503-30,G34		CABLE, CONNECTORIZED ITEM 2650			
3145	123A	1	ED5D503-30,G34A		CABLE, CONNECTORIZED ITEM 2655			

STOCKLIST CONTINUED ON SHEET D7

COPYRIGHT @ 2001 LUCENT TECHNOLOGIES
ALL RIGHTS RESERVED

BT13

INTERCABINET CABLING
FOR
5ESS * SWITCH
*LUCENT TRADEMARK

DWG SIZE C2 | ISSUE 117

LUCENT TECHNOLOGIES INC | ED5D500-21 | SHEET D6 OF 292

PRINTED IN U.S.A.

STOCKLIST

ITEM NBR	LIST GROUP CODE	QTY PER CODE	PRODUCT IDENTIFIER	CODE	DESCRIPTION	REFERENCE POSITION	NOTE SYM	NOTE NBR
3150	124	1	ED5D503-30,G35		CABLE, CONNECTORIZED ITEM 2660			
3160	125	1	ED5D503-30,G36		CABLE, CONNECTORIZED ITEM 2670			
3170	126	1	ED5D503-30,G105		CABLE, CONNECTORIZED ITEM 2680			
3180	126	1	ED5D503-30,G106		CABLE, CONNECTORIZED ITEM 2690			
3190	127	1	ED5D503-30,G107		CABLE, CONNECTORIZED ITEM 2700			
3200	127	1	ED5D503-30,G108		CABLE, CONNECTORIZED ITEM 2710			
3210	128	1	ED5D129-30,G2		CABLE, CONNECTORIZED ITEM 2720			
3225	129	1	ED5D503-30,G111		CABLE, CONNECTORIZED ITEM 2740			
3226	129	1	ED5D503-30,G112		CABLE, CONNECTORIZED ITEM 2750			
3227	129A	1	ED5D503-30,G113		CABLE, CONNECTORIZED ITEM 2760			
3228	129B	1	ED5D503-30,G114		CABLE, CONNECTORIZED ITEM 2770			
3229	129C	1	ED5D517-30,G9		ASSEMBLY, CONNECTORIZED CABLE ITEM 2771			
3230	129D	1	ED5D517-30,G17		ASSEMBLY, CONNECTORIZED CABLE ITEM 2772			
3231	129E	1	ED5D517-30,G9B		ASSEMBLY, CONNECTORIZED CABLE ITEM 2773			
3232	129F	1	ED5D517-30,G21		ASSEMBLY, CONNECTORIZED CABLE ITEM 2775			
3234	130	1	ED5D503-30,G301		CABLE, CONNECTORIZED ITEM 2800			
3240	130	1	ED5D503-30,G303		CABLE, CONNECTORIZED ITEM 2810			
3245	130A	1	ED5D503-30,G301A		CABLE, CONNECTORIZED ITEM 2815			
3246	130A	1	ED5D503-30,G303A		CABLE, CONNECTORIZED ITEM 2816			
3247	130B	1	ED5D503-32,G301B		ASSEMBLY, CONNECTORIZED CABLE ITEM 2817			
3248	130B	1	ED5D503-32,G303B		ASSEMBLY, CONNECTORIZED CABLE ITEM 2819			
3249	130C	1	ED5D503-32,G301C		ASSEMBLY, CONNECTORIZED CABLE ITEM 2820			
3250	130C	1	ED5D503-32,G303C		ASSEMBLY, CONNECTORIZED CABLE ITEM 2821			
3259	131	1	ED5D503-30,G331		CABLE, CONNECTORIZED ITEM 2820			
3260	131	1	ED5D503-30,G333		CABLE, CONNECTORIZED ITEM 2830			
3262	131A	1	ED5D503-30,G750		CABLE, CONNECTORIZED ITEM 2832			
3263	131A	1	ED5D503-30,G750A		CABLE, CONNECTORIZED ITEM 2833			
3279	132	1	ED5D503-30,G335		CABLE, CONNECTORIZED ITEM 2840			
3280	132	1	ED5D503-30,G337		CABLE, CONNECTORIZED ITEM 2850			
3282	132A	1	ED5D503-30,G752		CABLE, CONNECTORIZED ITEM 2852			
3283	132A	1	ED5D503-30,G752A		CABLE, CONNECTORIZED ITEM 2853			

******** STOCKLIST CONTINUED AT RIGHT *********

STOCKLIST

ITEM NBR	LIST GROUP CODE	QTY PER CODE	PRODUCT IDENTIFIER	CODE	DESCRIPTION	REFERENCE POSITION	NOTE SYM	NOTE NBR
3290	133	1	ED5D503-30,G339		CABLE, CONNECTORIZED ITEM 2860			
3300	133	1	ED5D503-30,G341		CABLE, CONNECTORIZED ITEM 2870			
3301	133A	1	ED5D503-30,G339A		CABLE, CONNECTORIZED ITEM 2872			
3302	133A	1	ED5D503-30,G341A		CABLE, CONNECTORIZED ITEM 2873			
3303	133B	1	ED5D503-30,G754		CABLE, CONNECTORIZED ITEM 2875			
3304	133B	1	ED5D503-30,G754A		CABLE, CONNECTORIZED ITEM 2877			
3305	133C	1	ED5D503-30,G756		CABLE, CONNECTORIZED ITEM 2879			
3306	133C	1	ED5D503-30,G756A		CABLE, CONNECTORIZED ITEM 2881			
3310	134	1	ED5D503-30,G311		CABLE, CONNECTORIZED ITEM 2890			
3320	134	1	ED5D503-30,G313		CABLE, CONNECTORIZED ITEM 2900			
3330	134	1	ED5D503-30,G315		CABLE, CONNECTORIZED ITEM 2910			
3340	134	1	ED5D503-30,G317		CABLE, CONNECTORIZED ITEM 2920			
3345	134A	1	ED5D503-30,G311A		CABLE, CONNECTORIZED ITEM 2925			
3346	134A	1	ED5D503-30,G313A		CABLE, CONNECTORIZED ITEM 2926			
3347	134A	1	ED5D503-30,G315A		CABLE, CONNECTORIZED ITEM 2927			
3348	134A	1	ED5D503-30,G317A		CABLE, CONNECTORIZED ITEM 2928			
3349	134B	1	ED5D503-32,G311B		ASSEMBLY, CONNECTORIZED CABLE ITEM 2929			
3350	134B	1	ED5D503-32,G313B		ASSEMBLY, CONNECTORIZED CABLE ITEM 2930			
3351	134B	1	ED5D503-32,G315B		ASSEMBLY, CONNECTORIZED CABLE ITEM 2931			
3352	134B	1	ED5D503-32,G317B		ASSEMBLY, CONNECTORIZED CABLE ITEM 2932			
3353	134C	1	ED5D503-32,G311C		ASSEMBLY, CONNECTORIZED CABLE ITEM 2933			
3354	134C	1	ED5D503-32,G313C		ASSEMBLY, CONNECTORIZED CABLE ITEM 2934			
3355	134C	1	ED5D503-32,G315C		ASSEMBLY, CONNECTORIZED CABLE ITEM 2935			
3356	134C	1	ED5D503-32,G317C		ASSEMBLY, CONNECTORIZED CABLE ITEM 2936			
3359	135	1	ED5D503-30,G319		CABLE, CONNECTORIZED ITEM 2930			

STOCKLIST CONTINUED ON SHEET D8

COPYRIGHT @ 2001 LUCENT TECHNOLOGIES
ALL RIGHTS RESERVED

BT13

INTERCABINET CABLING
FOR
5ESS * SWITCH
*LUCENT TRADEMARK

DWG SIZE C2 | ISSUE 117

PRINTED IN U.S.A.

STOCKLIST

ITEM NBR	LIST GROUP CODE	QTY PER CODE	PRODUCT IDENTIFIER	CODE	DESCRIPTION	REFERENCE POSITION	NOTE SYM	NOTE NBR
3360	135	1	ED5D503-30,G321		CABLE, CONNECTORIZED ITEM 2940			
3365	135A	1	ED5D503-30,G319A		CABLE, CONNECTORIZED ITEM 2945			
3366	135A	1	ED5D503-30,G321A		CABLE, CONNECTORIZED ITEM 2946			
3367	135B	1	ED5D503-32,G319B		ASSEMBLY, CONNECTORIZED CABLE ITEM 2947			
3368	135B	1	ED5D503-32,G321B		ASSEMBLY, CONNECTORIZED CABLE ITEM 2948			
3369	135C	1	ED5D503-32,G319C		ASSEMBLY, CONNECTORIZED CABLE ITEM 2949			
3370	135C	1	ED5D503-32,G321C		ASSEMBLY, CONNECTORIZED CABLE ITEM 2950			
3372	137	1	ED5D505-30,G159		CABLE, CONNECTORIZED ITEM 2955			
3374	137A	1	ED5D505-30,G159B		CABLE, CONNECTORIZED ITEM 2956			
3380	138	1	ED5D503-32,G307		ASSEMBLY, CONNECTORIZED CABLE ITEM 2961			
3385	138	1	ED5D503-32,G307A		ASSEMBLY, CONNECTORIZED CABLE ITEM 2962			
3390	138	1	ED5D503-32,G307B		ASSEMBLY, CONNECTORIZED CABLE ITEM 2963			
3395	138	1	ED5D503-32,G307C		ASSEMBLY, CONNECTORIZED CABLE ITEM 2964			
3400	139	1	ED5D503-32,G308		ASSEMBLY, CONNECTORIZED CABLE ITEM 2965			
3405	139	1	ED5D503-32,G308A		ASSEMBLY, CONNECTORIZED CABLE ITEM 2906			
3410	139	1	ED5D503-32,G308B		ASSEMBLY, CONNECTORIZED CABLE ITEM 2967			
3415	139	1	ED5D503-32,G308C		ASSEMBLY, CONNECTORIZED CABLE ITEM 2968			
3417	140	1	ED5D503-30,G150		CABLE, CONNECTORIZED ITEM 2980			
3418	140A	1	ED5D503-30,G151		CABLE, CONNECTORIZED ITEM 2985			
3419	140B	1	ED5D503-30,G152		CABLE, CONNECTORIZED ITEM 2990			
3420	141	1	ED5D503-30,G37		CABLE, CONNECTORIZED ITEM 3000			
3425	141A	1	ED5D503-30,G37A		CABLE, CONNECTORIZED ITEM 3005			
3430	142	1	ED5D503-30,G38		CABLE, CONNECTORIZED ITEM 3010			
3435	142A	1	ED5D503-30,G38A		CABLE, CONNECTORIZED ITEM 3015			
3440	143	1	ED5D129-30,G1		CABLE, CONNECTORIZED ITEM 3020			
3450	145	1	ED5D503-32,G305		ASSEMBLY, CONNECTORIZED CABLE ITEM 3100			
3460	145	1	ED5D503-32,G306		ASSEMBLY, CONNECTORIZED CABLE ITEM 3110			
3470	145A	1	ED5D503-32,G305A		ASSEMBLY, CONNECTORIZED CABLE ITEM 3120			
3480	145A	1	ED5D503-32,G306A		ASSEMBLY, CONNECTORIZED CABLE ITEM 3130			
3481	145B	1	ED5D843-30,G1		CABLE, ASSEMBLY ITEM 3135			
3482	145C	1	ED5D843-30,G2		CABLE, ASSEMBLY ITEM 3140			

******** STOCKLIST CONTINUED AT RIGHT *********

STOCKLIST

ITEM NBR	LIST GROUP CODE	QTY PER CODE	PRODUCT IDENTIFIER	CODE	DESCRIPTION	REFERENCE POSITION	NOTE SYM	NOTE NBR
3483	145D	1	ED5D843-30,G3		CABLE, ASSEMBLY ITEM 3145			
3484	145E	1	ED5D843-30,G4		CABLE, ASSEMBLY ITEM 3150			
3485	145F	1	ED5D843-30,G5		CABLE, ASSEMBLY ITEM 3155			
3486	145G	1	ED5D843-30,G6		CABLE, ASSEMBLY ITEM 3160			
3487	145H	1	ED5D843-30,G7		CABLE, ASSEMBLY ITEM 3165			
3488	145J	1	ED5D843-30,G8		CABLE, ASSEMBLY ITEM 3170			
3492	145K	1	ED5D503-32,G305B		ASSEMBLY, CONNECTORIZED CABLE ITEM 3175			
3496	145K	1	ED5D503-32,G306B		ASSEMBLY, CONNECTORIZED CABLE ITEM 3180			
3500	146	1	ED5D503-32,G322		ASSEMBLY, CONNECTORIZED CABLE ITEM 3200			
3510	146	1	ED5D503-32,G323		ASSEMBLY, CONNECTORIZED CABLE ITEM 3250			
3520	146A	1	ED5D503-32,G322A		ASSEMBLY, CONNECTORIZED CABLE ITEM 3300			
3530	146A	1	ED5D503-32,G323A		ASSEMBLY, CONNECTORIZED CABLE ITEM 3350			
3531	146B	1	ED5D503-32,G322C		ASSEMBLY, CONNECTORIZED CABLE ITEM 3352			
3532	146B	1	ED5D503-32,G323C		ASSEMBLY, CONNECTORIZED CABLE ITEM 3353			
3533	146C	1	ED5D503-32,G322D		ASSEMBLY, CONNECTORIZED CABLE ITEM 3355			
3534	146C	1	ED5D503-32,G323D		ASSEMBLY, CONNECTORIZED CABLE ITEM 3360			
3535	146D	1	ED5D503-32,G322E		ASSEMBLY, CONNECTORIZED CABLE ITEM 3365			
3536	146D	1	ED5D503-32,G323E		ASSEMBLY, CONNECTORIZED CABLE ITEM 3370			
3537	146E	1	ED5D503-32,G322F		ASSEMBLY, CONNECTORIZED CABLE ITEM 3375			
3538	146E	1	ED5D503-32,G323F		ASSEMBLY, CONNECTORIZED CABLE ITEM 3380			
3540	147	1	ED5D503-32,G324		ASSEMBLY, CONNECTORIZED CABLE ITEM 3400			
3550	147	1	ED5D503-32,G325		ASSEMBLY, CONNECTORIZED CABLE ITEM 3450			
3560	147A	1	ED5D503-32,G324A		ASSEMBLY, CONNECTORIZED CABLE ITEM 3500			
3570	147A	1	ED5D503-32,G325A		ASSEMBLY, CONNECTORIZED CABLE ITEM 3550			
3571	147B	1	ED5D503-32,G324C		ASSEMBLY, CONNECTORIZED CABLE ITEM 3552			

STOCKLIST CONTINUED ON SHEET D9

COPYRIGHT @ 2001 LUCENT TECHNOLOGIES
ALL RIGHTS RESERVED

BT13

INTERCABINET CABLING
FOR
5ESS * SWITCH
*LUCENT TRADEMARK

DWG SIZE C2 | ISSUE 117

PRINTED IN U.S.A.

STOCKLIST

ITEM NBR	LIST GROUP CODE	QTY PER CODE	PRODUCT IDENTIFIER	CODE	DESCRIPTION	REFERENCE POSITION	NOTE SYM	NOTE NBR
3572	147B	1	ED5D503-32,G325C		ASSEMBLY, CONNECTORIZED CABLE ITEM 3553			
3573	148	1	ED5D503-32,G351		ASSEMBLY, CONNECTORIZED CABLE ITEM 3561			
3574	148	1	ED5D503-32,G350		ASSEMBLY, CONNECTORIZED CABLE ITEM 3560			
3576	148A	1	ED5D503-32,G350B		ASSEMBLY, CONNECTORIZED CABLE ITEM 3572			
3577	148A	1	ED5D503-32,G351B		ASSEMBLY, CONNECTORIZED CABLE ITEM 3574			
3578	148C	1	ED5D503-32,G350C		ASSEMBLY, CONNECTORIZED CABLE ITEM 3576			
3581	148C	1	ED5D503-32,G351C		ASSEMBLY, CONNECTORIZED CABLE ITEM 3577			
3584	148D	1	ED5D503-32,G350D		ASSEMBLY, CONNECTORIZED CABLE ITEM 3579			
3586	148D	1	ED5D503-32,G351D		ASSEMBLY, CONNECTORIZED CABLE ITEM 3580			
3588	148E	1	ED5D803-36,G3		ASSEMBLY, CABLE ITEM 3565			
3589	148E	1	ED5D803-36,G4		ASSEMBLY, CABLE ITEM 3566			
3590	148F	1	ED5D803-38,G1		ASSEMBLY, CONNECTORIZED CABLE ITEM 3568			
3591	148G	1	ED5D803-38,G2		ASSEMBLY, CONNECTORIZED CABLE ITEM 3569			
3592	148H	1	ED5D803-38,G3		ASSEMBLY, CONNECTORIZED CABLE ITEM 3570			
3593	148J	1	ED5D803-38,G4		ASSEMBLY, CONNECTORIZED CABLE ITEM 3571			
3600	149	1	ED5D503-32,G352		ASSEMBLY, CONNECTORIZED CABLE ITEM 3581			
3601	149	1	ED5D503-32,G353		ASSEMBLY, CONNECTORIZED CABLE ITEM 3591			
3604	149A	1	ED5D503-32,G352B		ASSEMBLY, CONNECTORIZED CABLE ITEM 3593			
3605	149A	1	ED5D503-32,G353B		ASSEMBLY, CONNECTORIZED CABLE ITEM 3594			
3608	150	1	ED5D503-32,G322B		ASSEMBLY, CONNECTORIZED CABLE ITEM 3595			
3609	150	1	ED5D503-32,G323B		ASSEMBLY, CONNECTORIZED CABLE ITEM 3596			
3610	151	1	ED5D503-32,G324B		ASSEMBLY, CONNECTORIZED CABLE ITEM 3597			
3611	151	1	ED5D503-32,G325B		ASSEMBLY, CONNECTORIZED CABLE ITEM 3598			
3613	152	1	ED5D503-30,G758		CABLE, CONNECTORIZED ITEM 3599			
3614	152	1	ED5D503-30,G758A		CABLE, CONNECTORIZED ITEM 3600			
3615	152A	1	ED5D503-30,G762		CABLE, CONNECTORIZED ITEM 3601			
3616	152A	1	ED5D503-30,G762A		CABLE, CONNECTORIZED ITEM 3602			
3617	153	1	ED5D503-30,G760		CABLE, CONNECTORIZED ITEM 3603			
3618	153	1	ED5D503-30,G760A		CABLE, CONNECTORIZED ITEM 3604			
3619	153A	1	ED5D503-30,G764		CABLE, CONNECTORIZED ITEM 3605			
3621	153A	1	ED5D503-30,G764A		CABLE, CONNECTORIZED ITEM 3606			

******** STOCKLIST CONTINUED AT RIGHT *********

STOCKLIST

ITEM NBR	LIST GROUP CODE	QTY PER CODE	PRODUCT IDENTIFIER	CODE	DESCRIPTION	REFERENCE POSITION	NOTE SYM	NOTE NBR
3622	154	1	ED5D503-30,G761		CABLE, CONNECTORIZED ITEM 3607			
3623	154	1	ED5D503-30,G761A		CABLE, CONNECTORIZED ITEM 3608			
3624	154A	1	ED5D503-30,G765		CABLE, CONNECTORIZED ITEM 3609			
3625	154A	1	ED5D503-30,G765A		CABLE, CONNECTORIZED ITEM 3611			
3626	155	1	ED5D503-30,G768		CABLE, CONNECTORIZED ITEM 3620			
3627	155	1	ED5D503-30,G768A		CABLE, CONNECTORIZED ITEM 3630			
3628	155A	1	ED5D503-30,G766		CABLE, CONNECTORIZED ITEM 3631			
3629	155A	1	ED5D503-30,G766A		CABLE, CONNECTORIZED ITEM 3632			
3630	158C 159C	1	ED5D503-30,G214C G214C		CABLE, CONNECTORIZED ITEM 4020			
3631	156C 157C 158C 159C	1	ED5D503-30,G211C G211C, G211C, G211C		CABLE, CONNECTORIZED ITEM 3990			
3632	156C 157C 158C 159C	1	ED5D503-30,G213C G213C, G213C, G213C		CABLE, CONNECTORIZED ITEM 4000			
3633	157C 158C 159C	1	ED5D503-30,G212C G212C, G212C		CABLE, CONNECTORIZED ITEM 4010			
3635	159C	1	ED5D503-30,G215C		CABLE, CONNECTORIZED ITEM 4025			
3636	155	1	ED5D503-30,G769		CABLE, CONNECTORIZED ITEM 3640			
3637	155	1	ED5D503-30,G769B		CABLE, CONNECTORIZED ITEM 3642			
3638	155A	1	ED5D503-30,G767		CABLE, CONNECTORIZED ITEM 3644			
3639	155A	1	ED5D503-30,G767B		CABLE, CONNECTORIZED ITEM 3646			
3670	160	1	ED5D503-30,G31		CABLE, CONNECTORIZED ITEM 4080			
3672	160A	1	ED5D708-34,G3		ASSEMBLY, CONNECTORIZED CABLE ITEM 4082			
3680	161	1	ED5D503-30,G32		CABLE, CONNECTORIZED ITEM 4090			
3682	161A	1	ED5D708-34,G4		ASSEMBLY, CONNECTORIZED CABLE ITEM 4092			
3684	162	1	ED5D503-30,G20		CABLE, CONNECTORIZED ITEM 4092			

STOCKLIST CONTINUED ON SHEET D10

COPYRIGHT @ 2001 LUCENT TECHNOLOGIES
ALL RIGHTS RESERVED

BT13

INTERCABINET CABLING
FOR
5ESS * SWITCH
*LUCENT TRADEMARK

DWG SIZE C2 | ISSUE 117

LUCENT TECHNOLOGIES INC | ED5D500-21 | SHEET D9 OF 292

PRINTED IN U.S.A.

STOCKLIST

ITEM NBR	LIST GROUP CODE	QTY PER CODE	PRODUCT IDENTIFIER	CODE	DESCRIPTION	REFERENCE POSITION	NOTE SYM	NOTE NBR
3690	170	1	ED5X205-30,G250		CABLE, CONNECTORIZED ASSEMBLY ITEM 4100			
3700	170	1	ED5X205-30,G251		CABLE, CONNECTORIZED ASSEMBLY ITEM 4110			
3710	170A	1	ED5X205-35,G250A		CABLE, CONNECTORIZED ITEM 4120			
3720	170A	1	ED5X205-35,G251A		CABLE, CONNECTORIZED ITEM 4130			
3730	175 176 177	1	ED5D503-30,G211C G211C, G211C		CABLE, CONNECTORIZED ITEM 4140			
3740	175 176 177	1	ED5D503-30,G213C G213C, G213C		CABLE, CONNECTORIZED ITEM 4150			
3750	175 176 177	1	ED5D503-30,G211E G211E, G211E		CABLE, CONNECTORIZED ITEM 4180			
3760	175 176 177	1	ED5D503-30,G213E G213E, G213E		CABLE, CONNECTORIZED ITEM 4190			
3780	176 177	1	ED5D503-30,G212C G212C		CABLE, CONNECTORIZED ITEM 4160			
3790	176 177	1	ED5D503-30,G212E G212E		CABLE, CONNECTORIZED ITEM 4200			
3810	177	1	ED5D503-30,G214C		CABLE, CONNECTORIZED ITEM 4170			
3820	177	1	ED5D503-30,G214E		CABLE, CONNECTORIZED ITEM 4210			
4000	180 181 182	1	ED5D503-30,G261, G261, G261		CABLE, CONNECTORIZED ITEM 5000			
4010	180 181 182	1	ED5D503-30,G262, G262, G262		CABLE, CONNECTORIZED ITEM 5010			
4020	181 182	1	ED5D503-30,G263, G263		CABLE, CONNECTORIZED ITEM 5020			
4030	182	1	ED5D503-30,G264		CABLE, CONNECTORIZED ITEM 5030			
4040	180A 181A 182A	1	ED5D503-35,G261A G261A, G261A		CABLE, CONNECTORIZED ASSEMBLY ITEM 5040			
4050	180A 181A 182A	1	ED5D503-35,G262A G262A, G262A		CABLE, CONNECTORIZED ASSEMBLY ITEM 5050			
4060	181A 182A	1	ED5D503-35,G263A G263A		CABLE, CONNECTORIZED ASSEMBLY ITEM 5060			
4070	182A	1	ED5D503-35,G264A		CABLE, CONNECTORIZED ASSEMBLY ITEM 5070			
4080	180B 181B 182B	1	ED5D503-35,G261B G261B, G261B		CABLE, CONNECTORIZED ASSEMBLY ITEM 5080			
4090	180B 181B 182B	1	ED5D503-35,G262B G262B, G262B		CABLE, CONNECTORIZED ASSEMBLY ITEM 5090			

******** STOCKLIST CONTINUED AT RIGHT *********

STOCKLIST

ITEM NBR	LIST GROUP CODE	QTY PER CODE	PRODUCT IDENTIFIER	CODE	DESCRIPTION	REFERENCE POSITION	NOTE SYM	NOTE NBR
4100	181B 182B	1	ED5D503-35,G263B G263B		CABLE, CONNECTORIZED ASSEMBLY ITEM 5100			
4110	182B	1	ED5D503-35,G264B		CABLE, CONNECTORIZED ASSEMBLY ITEM 5110			
4120	180D 181D 182D	1	ED5D503-30,G261D G261D, G261D		CABLE, CONNECTORIZED ITEM 5160			
4130	180D 181D 182D	1	ED5D503-30,G262D G262D, G262D		CABLE, CONNECTORIZED ITEM 5165			
4140	181D 182D	1	ED5D503-30,G263D G263D		CABLE, CONNECTORIZED ITEM 5170			
4150	182D	1	ED5D503-30,G264D		CABLE, CONNECTORIZED ITEM 5175			
4160	180E 181E 182E	1	ED5D503-30,G261E G261E, G261E		CABLE, CONNECTORIZED ITEM 5180			
4170	180E 181E 182E	1	ED5D503-30,G262E G262E, G262E		CABLE, CONNECTORIZED ITEM 5185			
4180	181E 182E	1	ED5D503-30,G263E G263E		CABLE, CONNECTORIZED ITEM 5190			
4190	182E	1	ED5D503-30,G264E		CABLE, CONNECTORIZED ITEM 5195			
4200	183 184 185 186	1	ED5D503-30,G282, G282, G282, G282		CABLE, CONNECTORIZED ITEM 5200			
4210	183 184 185 186	1	ED5D503-30,G282, G282, G282, G282		CABLE, CONNECTORIZED ITEM 5210			
4220	184 185 186	1	ED5D503-30,G283, G283, G283		CABLE, CONNECTORIZED ITEM 5220			
4230	185 186	1	ED5D503-30,G283, G283		CABLE, CONNECTORIZED ITEM 5230			
4240	186	1	ED5D503-30,G283		CABLE, CONNECTORIZED ITEM 5240			
4250	183A 184A 185A 186A	1	ED5D503-35,G282A G282A, G282A, G282A		CABLE, CONNECTORIZED ASSEMBLY ITEM 5250			
4260	183A 184A 185A 186A	1	ED5D503-35,G282A G282A, G282A, G282A		CABLE, CONNECTORIZED ASSEMBLY ITEM 5260			

STOCKLIST CONTINUED ON SHEET D11

COPYRIGHT @ 2001 LUCENT TECHNOLOGIES
ALL RIGHTS RESERVED

BT13

INTERCABINET CABLING
FOR
5ESS * SWITCH
*LUCENT TRADEMARK

DWG SIZE C2 | ISSUE 117

PRINTED IN U.S.A.

STOCKLIST

ITEM NBR	LIST GROUP CODE	QTY PER CODE	PRODUCT IDENTIFIER	CODE	DESCRIPTION	REFERENCE POSITION	NOTE SYM	NOTE NBR
4270	184A 185A 186A	1	ED5D503-35,G283A G283A, G283A		CABLE, CONNECTORIZED ASSEMBLY ITEM 5270			
4280	185A 186A	1	ED5D503-35,G283A G283A		CABLE, CONNECTORIZED ASSEMBLY ITEM 5280			
4290	186A	1	ED5D503-35,G283A		CABLE, CONNECTORIZED ASSEMBLY ITEM 5290			
4300	183B 184B 185B 186B	1	ED5D503-35,G282A G282A, G282A, G282A		CABLE, CONNECTORIZED ASSEMBLY ITEM 5300			
4310	183B 184B 185B 186B	1	ED5D503-35,G282A G282A, G282A, G282A		CABLE, CONNECTORIZED ASSEMBLY ITEM 5310			
4320	184B 185B 186B	1	ED5D503-35,G283A G283A, G283A		CABLE, CONNECTORIZED ASSEMBLY ITEM 5320			
4330	185B 186B	1	ED5D503-35,G283A G283A		CABLE, CONNECTORIZED ASSEMBLY ITEM 5330			
4340	186B	1	ED5D503-35,G283A		CABLE, CONNECTORIZED ASSEMBLY ITEM 5340			
4350	183D 184D 185D 186D	1	ED5D503-30,G282D G282D, G282D, G282D		CABLE, CONNECTORIZED ITEM 5350			
4360	183D 184D 185D 186D	1	ED5D503-30,G282D G282D, G282D, G282D		CABLE, CONNECTORIZED ITEM 5360			
4370	184D 185D 186D	1	ED5D503-30,G283D G283D, G283D		CABLE, CONNECTORIZED ITEM 5370			
4380	185D 186D	1	ED5D503-30,G283D G283D		CABLE, CONNECTORIZED ITEM 5380			
4390	186D	1	ED5D503-30,G283D		CABLE, CONNECTORIZED ITEM 5390			
4400	183E 184E 185E 186E	1	ED5D503-30,G282E G282E, G282E, G282E		CABLE, CONNECTORIZED ITEM 5400			
4410	183E 184E 185E 186E	1	ED5D503-30,G282E G282E, G282E, G282E		CABLE, CONNECTORIZED ITEM 5410			
4420	184E 185E 186E	1	ED5D503-30,G283E G283E, G283E		CABLE, CONNECTORIZED ITEM 5420			
4430	185E 186E	1	ED5D503-30,G283E G283E		CABLE, CONNECTORIZED ITEM 5430			
4440	186E	1	ED5D503-30,G283E		CABLE, CONNECTORIZED ITEM 5440			
5900	189	1	ED5D586-30,G10		CABLE, CONNECTORIZED ASSEMBLY ITEM 5750			
6000	190	1	ED5D586-30,G1		CABLE, CONNECTORIZED ASSEMBLY ITEM 5800			
6010	191	1	ED5D586-30,G2		CABLE, CONNECTORIZED ASSEMBLY ITEM 5810			

******** STOCKLIST CONTINUED AT RIGHT *********

STOCKLIST

ITEM NBR	LIST GROUP CODE	QTY PER CODE	PRODUCT IDENTIFIER	CODE	DESCRIPTION	REFERENCE POSITION	NOTE SYM	NOTE NBR
6015	191A	1	ED5D586-30,G2A		CABLE, CONNECTORIZED ASSEMBLY ITEM 5805			
6020	192	1	ED5D586-30,G4		CABLE, CONNECTORIZED ASSEMBLY ITEM 5820			
6030	192A	1	ED5D586-30,G5		CABLE, CONNECTORIZED ASSEMBLY ITEM 5830			
6035	192B	1	ED5D586-30,G4A		CABLE, CONNECTORIZED ASSEMBLY ITEM 5835			
6040	193	1	ED5D586-30,G9		CABLE, CONNECTORIZED ASSEMBLY ITEM 5840			
6043	193A	1	ED5D586-30,G9A		CABLE, CONNECTORIZED ASSEMBLY ITEM 5843			
6046	193B	1	ED5D586-30,G9B		CABLE, CONNECTORIZED ASSEMBLY ITEM 5846			
6050	194	1	ED5D586-30,G6		CABLE, CONNECTORIZED ASSEMBLY ITEM 5850			
6060	194A	1	ED5D586-30,G3		CABLE, CONNECTORIZED ASSEMBLY ITEM 5860			
6065	194B	1	ED5D586-30,G6A		CABLE, CONNECTORIZED ASSEMBLY ITEM 5865			
6070	195	1	ED5D586-30,G8		CABLE, CONNECTORIZED ASSEMBLY ITEM 5870			
6080	196	1	ED5D586-30,G7		CABLE, CONNECTORIZED ASSEMBLY ITEM 5880			
6085	196A	1	ED5D586-30,G7A		CABLE, CONNECTORIZED ASSEMBLY ITEM 5885			
6100	198	1	ED5D505-30,G198		CABLE, CONNECTORIZED ITEM 5890			
6103	198A	1	ED5D505-30,G198A		CABLE, CONNECTORIZED ITEM 5892			
6105	200	1	ED5D505-30,G200		CABLE, CONNECTORIZED ITEM 5895			
6110	200A	1	ED5D505-30,G200A		CABLE, CONNECTORIZED ITEM 5900			
6115	210	1	ED5D505-30,G207		CABLE, CONNECTORIZED ITEM 6000			
6160	201 202 203	1	ED5D503-32,G201, G201, G201		ASSEMBLY, CONNECTORIZED CABLE ITEM 6010			
6170	201 202 203	1	ED5D503-32,G202, G202, G202		ASSEMBLY, CONNECTORIZED CABLE ITEM 6020			
6180	202 203	1	ED5D503-32,G203, G203		ASSEMBLY, CONNECTORIZED CABLE ITEM 6030			
6190	203	1	ED5D503-32,G204		ASSEMBLY, CONNECTORIZED CABLE ITEM 6040			
6200	201B 202B 203B	1	ED5D503-32,G201B G201B, G201B		ASSEMBLY, CONNECTORIZED CABLE ITEM 6050			

STOCKLIST CONTINUED ON SHEET D12

COPYRIGHT @ 2001 LUCENT TECHNOLOGIES
ALL RIGHTS RESERVED

BT13

INTERCABINET CABLING
FOR
5ESS * SWITCH
*LUCENT TRADEMARK

DWG SIZE C2 | ISSUE 117

LUCENT TECHNOLOGIES INC | ED5D500-21 | SHEET OF D11 292

PRINTED IN U.S.A.

STOCKLIST

ITEM NBR	LIST GROUP CODE	QTY PER CODE	PRODUCT IDENTIFIER	CODE	DESCRIPTION	REFERENCE POSITION	NOTE SYM	NOTE NBR
6210	201B 202B 203B	1	ED5D503-32,G202B G202B, G202B		ASSEMBLY, CONNECTORIZED CABLE ITEM 6060			
6220	202B 203B	1	ED5D503-32,G203B G203B		ASSEMBLY, CONNECTORIZED CABLE ITEM 6070			
6230	203B	1	ED5D503-32,G204B		ASSEMBLY, CONNECTORIZED CABLE ITEM 6080			
6240	204 205 206 207	1	ED5D503-32,G292, G292, G292, G292		ASSEMBLY, CONNECTORIZED CABLE ITEM 6190			
6250	204 205 206 207	1	ED5D503-32,G292, G292, G292, G292		ASSEMBLY, CONNECTORIZED CABLE ITEM 6200			
6260	205 206 207	1	ED5D503-32,G293, G293, G293		ASSEMBLY, CONNECTORIZED CABLE ITEM 6210			
6270	206 207	1	ED5D503-32,G293, G293		ASSEMBLY, CONNECTORIZED CABLE ITEM 6220			
6280	207	1	ED5D503-32,G293		ASSEMBLY, CONNECTORIZED CABLE ITEM 6230			
6290	204B 205B 206B 207B	1	ED5D503-32,G292B G292B, G292B, G292B		ASSEMBLY, CONNECTORIZED CABLE ITEM 6240			
6300	204B 205B 206B 207B	1	ED5D503-32,G292B G292B, G292B, G292B		ASSEMBLY, CONNECTORIZED CABLE ITEM 6250			
6310	205B 206B 207B	1	ED5D503-32,G293B G293B, G293B		ASSEMBLY, CONNECTORIZED CABLE ITEM 6260			
6320	206B 207B	1	ED5D503-32,G293B G293B		ASSEMBLY, CONNECTORIZED CABLE ITEM 6270			
6340	207B	1	ED5D503-32,G293B		ASSEMBLY, CONNECTORIZED CABLE ITEM 6280			
6500	211A 212A 213A	1	ED5D503-32,G121A G121A, G121A		ASSEMBLY, CONNECTORIZED CABLE ITEM 6300			
6505	211A 212A 213A	1	ED5D503-32,G122A G122A, G122A		ASSEMBLY, CONNECTORIZED CABLE ITEM 6305			
6510	211A 212A 213A	1	ED5D503-32,G123A G123A, G123A		ASSEMBLY, CONNECTORIZED CABLE ITEM 6310			
6515	211A 212A 213A	1	ED5D503-32,G124A G124A, G124A		ASSEMBLY, CONNECTORIZED CABLE ITEM 6315			
6520	212A 213A	1	ED5D503-32,G125A G125A		ASSEMBLY, CONNECTORIZED CABLE ITEM 6320			
6525	212A 213A	1	ED5D503-32,G126A G126A		ASSEMBLY, CONNECTORIZED CABLE ITEM 6325			
6530	213A	1	ED5D503-32,G127A		ASSEMBLY, CONNECTORIZED CABLE ITEM 6330			

******** STOCKLIST CONTINUED AT RIGHT *********

STOCKLIST

ITEM NBR	LIST GROUP CODE	QTY PER CODE	PRODUCT IDENTIFIER	CODE	DESCRIPTION	REFERENCE POSITION	NOTE SYM	NOTE NBR
6535	213A	1	ED5D503-32,G128A		ASSEMBLY, CONNECTORIZED CABLE ITEM 6335			
6540	211B 212B 213B	1	ED5D503-32,G121B G121B, G121B		ASSEMBLY, CONNECTORIZED CABLE ITEM 6340			
6545	211B 212B 213B	1	ED5D503-32,G122B G122B, G122B		ASSEMBLY, CONNECTORIZED CABLE ITEM 6345			
6550	211B 212B 213B	1	ED5D503-32,G123B G123B, G123B		ASSEMBLY, CONNECTORIZED CABLE ITEM 6350			
6555	211B 212B 213B	1	ED5D503-32,G124B G124B, G124B		ASSEMBLY, CONNECTORIZED CABLE ITEM 6355			
6560	212B 213B	1	ED5D503-32,G125B G125B		ASSEMBLY, CONNECTORIZED CABLE ITEM 6360			
6565	212B 213B	1	ED5D503-32,G126B G126B		ASSEMBLY, CONNECTORIZED CABLE ITEM 6365			
6570	213B	1	ED5D503-32,G127B		ASSEMBLY, CONNECTORIZED CABLE ITEM 6370			
6575	213B	1	ED5D503-32,G128B		ASSEMBLY, CONNECTORIZED CABLE ITEM 6375			
6580	214A 215A 216A 217A	1	ED5D503-32,G133A G133A, G133A, G133A		ASSEMBLY, CONNECTORIZED CABLE ITEM 6380			
6585	214A 215A 216A 217A	1	ED5D503-32,G133A G133A, G133A, G133A		ASSEMBLY, CONNECTORIZED CABLE ITEM 6385			
6590	214A 215A 216A 217A	1	ED5D503-32,G133A G133A, G133A, G133A		ASSEMBLY, CONNECTORIZED CABLE ITEM 6390			
6595	214A 215A 216A 217A	1	ED5D503-32,G133A G133A, G133A, G133A		ASSEMBLY, CONNECTORIZED CABLE ITEM 6395			
6600	215A 216A 217A	1	ED5D503-32,G135A G135A, G135A		ASSEMBLY, CONNECTORIZED CABLE ITEM 6400			
6605	215A 216A 217A	1	ED5D503-32,G135A G135A, G135A		ASSEMBLY, CONNECTORIZED CABLE ITEM 6405			
6610	216A 217A	1	ED5D503-32,G135A G135A		ASSEMBLY, CONNECTORIZED CABLE ITEM 6410			

STOCKLIST CONTINUED ON SHEET D13

COPYRIGHT @ 2001 LUCENT TECHNOLOGIES
ALL RIGHTS RESERVED

BT13

INTERCABINET CABLING
FOR
5ESS * SWITCH
*LUCENT TRADEMARK

DWG SIZE C2 | ISSUE 117

LUCENT TECHNOLOGIES INC | ED5D500-21 | SHEET D12 OF 292

PRINTED IN U.S.A.

STOCKLIST

ITEM NBR	LIST GROUP CODE	QTY PER CODE	PRODUCT IDENTIFIER	CODE	DESCRIPTION	REFERENCE POSITION	NOTE SYM	NOTE NBR
6615	216A 217A	1	ED5D503-32,G135A G135A		ASSEMBLY, CONNECTORIZED CABLE ITEM 6415			
6620	217A	1	ED5D503-32,G135A		ASSEMBLY, CONNECTORIZED CABLE ITEM 6420			
6625	217A	1	ED5D503-32,G135A		ASSEMBLY, CONNECTORIZED CABLE ITEM 6425			
6630	214B 215B 216B 217B	1	ED5D503-32,G133B G133B, G133B, G133B		ASSEMBLY, CONNECTORIZED CABLE ITEM 6430			
6635	214B 215B 216B 217B	1	ED5D503-32,G133B G133B, G133B, G133B		ASSEMBLY, CONNECTORIZED CABLE ITEM 6435			
6640	214B 215B 216B 217B	1	ED5D503-32,G133B G133B, G133B, G133B		ASSEMBLY, CONNECTORIZED CABLE ITEM 6440			
6645	214B 215B 216B 217B	1	ED5D503-32,G133B G133B, G133B, G133B		ASSEMBLY, CONNECTORIZED CABLE ITEM 6445			
6650	215B 216B 217B	1	ED5D503-32,G135B G135B, G135B		ASSEMBLY, CONNECTORIZED CABLE ITEM 6450			
6655	215B 216B 217B	1	ED5D503-32,G135B G135B, G135B		ASSEMBLY, CONNECTORIZED CABLE ITEM 6455			
6660	216B 217B	1	ED5D503-32,G135B G135B		ASSEMBLY, CONNECTORIZED CABLE ITEM 6460			
6665	216B 217B	1	ED5D503-32,G135B G135B		ASSEMBLY, CONNECTORIZED CABLE ITEM 6465			
6670	217B	1	ED5D503-32,G135B		ASSEMBLY, CONNECTORIZED CABLE ITEM 6470			
6675	217B	1	ED5D503-32,G135B		ASSEMBLY, CONNECTORIZED CABLE ITEM 6475			
6680	221A 222A 223A	1	ED5D503-32,G141A G141A, G141A		ASSEMBLY, CONNECTORIZED CABLE ITEM 6480			
6685	221A 222A 223A	1	ED5D503-32,G142A G142A, G142A		ASSEMBLY, CONNECTORIZED CABLE ITEM 6485			
6690	221A 222A 223A	1	ED5D503-32,G143A G143A, G143A		ASSEMBLY, CONNECTORIZED CABLE ITEM 6490			
6695	221A 222A 223A	1	ED5D503-32,G144A G144A, G144A		ASSEMBLY, CONNECTORIZED CABLE ITEM 6495			
6700	222A 223A	1	ED5D503-32,G145A G145A		ASSEMBLY, CONNECTORIZED CABLE ITEM 6500			
6705	222A 223A	1	ED5D503-32,G146A G146A		ASSEMBLY, CONNECTORIZED CABLE ITEM 6505			
6710	223A	1	ED5D503-32,G147A		ASSEMBLY, CONNECTORIZED CABLE ITEM 6510			
6715	223A	1	ED5D503-32,G148A		ASSEMBLY, CONNECTORIZED CABLE ITEM 6515			

******** STOCKLIST CONTINUED AT RIGHT *********

STOCKLIST

ITEM NBR	LIST GROUP CODE	QTY PER CODE	PRODUCT IDENTIFIER	CODE	DESCRIPTION	REFERENCE POSITION	NOTE SYM	NOTE NBR
7010	330X	1	ED5D503-32,G341X		ASSEMBLY, CONNECTORIZED CABLE			154
7020	330X	1	ED5D503-32,G342X		ASSEMBLY, CONNECTORIZED CABLE			154
7030	331X	1	ED5D503-32,G343X		ASSEMBLY, CONNECTORIZED CABLE			154
7040	331X	1	ED5D503-32,G344X		ASSEMBLY, CONNECTORIZED CABLE			154
7050	332X	2	103044004	711RAB1-64	RECEPTACLE (GRAY MANDRELS)		*	154
7060	332X	4	401194428	KS19195L1	WIRE,GROUND 26 GA, SOLID, BK		*	154
7070	332X	1	401224530	KS21256L1	SLEEVE,SPECIAL		*	154
7080	333X	2	103044103	711RAD1-64	RECEPTACLE (WHITE MANDRELS)		*	154
7090	333X	4	401194428	KS19195L1	WIRE,GROUND 26 GA, SOLID, BK		*	154
7100	333X	1	401224530	KS21256L1	SLEEVE,SPECIAL		*	154
7110	345X	1	ED5D503-32,G345X		ASSEMBLY, CONNECTORIZED CABLE			154
7120	345X	1	ED5D503-32,G346X		ASSEMBLY, CONNECTORIZED CABLE			154
7130	346X	1	ED5D503-32,G347X		ASSEMBLY, CONNECTORIZED CABLE			154
7140	346X	1	ED5D503-32,G348X		ASSEMBLY, CONNECTORIZED CABLE			154
7145	900	1	ED5D503-32,G900		ASSEMBLY, CONNECTORIZED CABLE ITEM 8000			
7146	900	1	ED5D503-32,G901		ASSEMBLY, CONNECTORIZED CABLE ITEM 8010			
7148	901	1	ED5D503-32,G902		ASSEMBLY, CONNECTORIZED CABLE ITEM 8020			
7150	901	1	ED5D503-32,G903		ASSEMBLY, CONNECTORIZED CABLE ITEM 8030			
7200	350	1	ED5D503-30,G121		CABLE, CONNECTORIZED ITEM 8040			
7210	350	1	ED5D503-30,G122		CABLE, CONNECTORIZED ITEM 8045			
7215	352	1	ED5D503-30,G125		CABLE, CONNECTORIZED ITEM 8050			
7220	352	1	ED5D503-30,G126		CABLE, CONNECTORIZED ITEM 8055			
7225	351	1	ED5D503-30,G129		CABLE, CONNECTORIZED ITEM 8060			
7230	351	1	ED5D503-30,G130		CABLE, CONNECTORIZED ITEM 8065			
7235	351	1	ED5D503-30,G131		CABLE, CONNECTORIZED ITEM 8070			
7240	351	1	ED5D503-30,G132		CABLE, CONNECTORIZED ITEM 8075			
7245	350A	1	ED5D503-30,G117		CABLE, CONNECTORIZED ITEM 8080			

STOCKLIST CONTINUED ON SHEET D14

COPYRIGHT @ 2001 LUCENT TECHNOLOGIES
ALL RIGHTS RESERVED

BT13

INTERCABINET CABLING
FOR
5ESS * SWITCH
*LUCENT TRADEMARK

DWG SIZE C2 | ISSUE 117

LUCENT TECHNOLOGIES INC | ED5D500-21 | SHEET D13 OF 292

PRINTED IN U.S.A.

STOCKLIST

ITEM NBR	LIST GROUP CODE	QTY PER CODE	PRODUCT IDENTIFIER	CODE	DESCRIPTION	REFERENCE POSITION	NOTE SYM	NOTE NBR
7250	350A	1	ED5D503-30,G118		CABLE, CONNECTORIZED ITEM 8085			
7265	351A	1	ED5D503-30,G137		CABLE, CONNECTORIZED ITEM 8100			
7270	351A	1	ED5D503-30,G138		CABLE, CONNECTORIZED ITEM 8105			
7275	351A	1	ED5D503-30,G139		CABLE, CONNECTORIZED ITEM 8110			
7280	351A	1	ED5D503-30,G140		CABLE, CONNECTORIZED ITEM 8115			
7285	353	1	ED5D503-30,G123		CABLE, CONNECTORIZED ITEM 8120			
7290	353	1	ED5D503-30,G124		CABLE, CONNECTORIZED ITEM 8125			
7295	355	1	ED5D503-30,G127		CABLE, CONNECTORIZED ITEM 8130			
7300	355	1	ED5D503-30,G128		CABLE, CONNECTORIZED ITEM 8135			
7305	354	1	ED5D503-30,G133		CABLE, CONNECTORIZED ITEM 8140			
7310	354	1	ED5D503-30,G134		CABLE, CONNECTORIZED ITEM 8145			
7315	354	1	ED5D503-30,G135		CABLE, CONNECTORIZED ITEM 8150			
7320	354	1	ED5D503-30,G136		CABLE, CONNECTORIZED ITEM 8155			
7325	353A	1	ED5D503-30,G119		CABLE, CONNECTORIZED ITEM 8160			
7330	353A	1	ED5D503-30,G120		CABLE, CONNECTORIZED ITEM 8165			
7345	354A	1	ED5D503-30,G141		CABLE, CONNECTORIZED ITEM 8180			
7350	354A	1	ED5D503-30,G142		CABLE, CONNECTORIZED ITEM 8185			
7355	354A	1	ED5D503-30,G143		CABLE, CONNECTORIZED ITEM 8190			
7360	354A	1	ED5D503-30,G144		CABLE, CONNECTORIZED ITEM 8195			
7370	370	1	ED5D803-36,G1		ASSEMBLY, CABLE ITEM 8210			
7375	370	1	ED5D803-36,G1A		ASSEMBLY, CABLE ITEM 8210			
7377	370A	1	ED5D803-36,G23		ASSEMBLY, CABLE ITEM 8215			
7380	371	1	ED5D803-36,G2		ASSEMBLY, CABLE ITEM 8220			
7385	371	1	ED5D803-36,G2A		ASSEMBLY, CABLE ITEM 8230			
7387	373	1	ED5D803-37,G1		ASSEMBLY, COAX CABLE ITEM 8236			
7388	373	1	ED5D803-37,G1A		ASSEMBLY, COAX CABLE ITEM 8238			
7390	374	1	ED5D803-37,G2		ASSEMBLY, COAX CABLE ITEM 8240			
7391	374	1	ED5D803-37,G2A		ASSEMBLY, COAX CABLE ITEM 8242			
7392	374	1	ED5D803-37,G3		ASSEMBLY, COAX CABLE ITEM 8244			
7393	374	1	ED5D803-37,G3A		ASSEMBLY, COAX CABLE ITEM 8246			

******** STOCKLIST CONTINUED AT RIGHT *********

STOCKLIST

ITEM NBR	LIST GROUP CODE	QTY PER CODE	PRODUCT IDENTIFIER	CODE	DESCRIPTION	REFERENCE POSITION	NOTE SYM	NOTE NBR
7400	380	1	ED5D901-30,G1		CABLE, ASSEMBLY ITEM 8250 REPL: ED5D503-32,G380			
7401	380	1	ED5D901-30,G2		CABLE, ASSEMBLY ITEM 8251 REPL: ED5D503-32,G380A			
7450	381	1	ED5D901-30,G3		CABLE, ASSEMBLY ITEM 8255 REPL: ED5D503-32,G381			
7451	381	1	ED5D901-30,G4		CABLE, ASSEMBLY ITEM 8256 REPL: ED5D503-32,G381A			
7500	400	1	ED5D502-18,G200		ASSEMBLY, CABLE ITEM 8300			
7600	401	1	ED5D502-22,G200		ASSEMBLY, CABLE ITEM 8310			
7700	402	1	ED5D502-23,G200		ASSEMBLY, CABLE ITEM 8320			
7800	403	1	ED5D502-24,G200		ASSEMBLY, CABLE ITEM 8330			
7900	404	1	ED5D502-21,G200		ASSEMBLY, CABLE ITEM 8340			
7910	405	1	ED5D502-21,G201		ASSEMBLY, CABLE ITEM 8345			
8000	450	1	ED5D765-17,G18		ASSEMBLY, CABLE ITEM 8350			
8100	450	1	ED5D765-17,G19		ASSEMBLY, CABLE ITEM 8360			
8150	451	1	ED5D765-17,G20		ASSEMBLY, CABLE ITEM 8370			
8200	451	1	ED5D765-17,G21		ASSEMBLY, CABLE ITEM 8380			
8250	452	1	ED5D765-17,G22		ASSEMBLY, CABLE ITEM 8390			
8300	452	1	ED5D765-17,G23		ASSEMBLY, CABLE ITEM 8400			
8350	453	1	ED5D765-17,G24		ASSEMBLY, CABLE ITEM 8410			
8400	453	1	ED5D765-17,G25		ASSEMBLY, CABLE ITEM 8420			
8450	454	1	ED5D901-30,G5		CABLE, ASSEMBLY ITEM 8430 REPL: ED5D765-17,G26			
8500	454	1	ED5D901-30,G6		CABLE, ASSEMBLY ITEM 8440 REPL: ED5D765-17,G27			
8550	455	1	ED5D901-30,G7		CABLE, ASSEMBLY ITEM 8450 REPL: ED5D765-16,G28			
8600	455	1	ED5D901-30,G8		CABLE, ASSEMBLY ITEM 8460 REPL: ED5D765-17,G29			
8650	463	1	ED5D503-30,G75		CABLE, CONNECTORIZED ITEM 8490			

STOCKLIST CONTINUED ON SHEET D15

COPYRIGHT @ 2001 LUCENT TECHNOLOGIES
ALL RIGHTS RESERVED

BT13

INTERCABINET CABLING
FOR
5ESS * SWITCH
*LUCENT TRADEMARK

DWG SIZE C2 | ISSUE 117

PRINTED IN U.S.A.

STOCKLIST

ITEM NBR	LIST GROUP CODE	QTY PER CODE	PRODUCT IDENTIFIER	CODE	DESCRIPTION	REFERENCE POSITION	NOTE SYM	NOTE NBR
8655	464	1	ED5D503-30,G76		CABLE, CONNECTORIZED ITEM 8495			

******* END OF STOCKLIST *****

BX-5

PCT LINKS CONNECTIONS FOR DNU-S

DNU-S (0)

COT	CABLE DESIGN	DNU-S EQL	CABLE ASSEMBLY ED5D518-30	DROP LENGTH
000	COT000TX COT000RX	028-086-032T	G19 G20	7-0 7-0
001	COT001TX COT001RX	028-072-432T	G19 G20	6-10 6-10
010	COT010TX COT010RX	028-080-132T	G19 G20	7-0 7-0
011	COT011TX COT011RX	028-071-032T	G19 G20	6-10 6-10
020	COT020TX COT020RX	028-086-000T	G19 G20	6-10 6-10
021	COT021TX COT021RX	028-072-400T	G19 G20	6-10 6-10
030	COT030TX COT030RX	028-080-100T	G19 G20	7-0 7-0
031	COT031TX COT031RX	028-071-000T	G19 G20	6-10 6-10
040	COT040TX COT040RX	019-086-032B	G19 G20	7-9 7-9
041	COT041TX COT041RX	019-072-432B	G19 G20	7-7 7-7
050	COT050TX COT050RX	019-080-132B	G19 G20	7-9 7-9
051	COT051TX COT051RX	019-071-032B	G19 G20	7-7 7-7
100	COT100TX COT100RX	028-106-432T	G19 G20	7-0 7-0
101	COT101TX COT101RX	028-120-032T	G19 G20	6-10 6-10
110	COT110TX COT110RX	028-105-032T	G19 G20	7-0 7-0
111	COT111TX COT111RX	028-114-132T	G19 G20	7-0 7-0
120	COT120TX COT120RX	028-106-400T	G19 G20	7-0 7-0
121	COT121TX COT121RX	028-120-000T	G19 G20	6-10 6-10
130	COT130TX COT130RX	028-105-000T	G19 G20	7-0 7-0

*** CONTINUED ***

** CONTINUED **

BX-5

131	COT131TX COT131RX	028-114-100T	G19 G20	7-0 7-0
140	COT140TX COT140RX	019-106-432B	G19 G20	7-9 7-9
141	COT141TX COT141RX	019-120-032B	G19 G20	7-7 7-7
150	COT150TX COT150RX	019-105-032B	G19 G20	7-9 7-9
151	COT151TX COT151RX	019-114-100B	G19 G20	7-7 7-7

PCT LINKS CONNECTIONS FOR DNU-S

DNU-S (1)

COT	CABLE DESIGN	DNU-S EQL	CABLE ASSEMBLY ED5D518-30	DROP LENGTH
000	COT000TX COT000RX	053-086-032T	G19 G20	5-0 5-0
001	COT001TX COT001RX	053-072-432T	G19 G20	4-10 4-10
010	COT010TX COT010RX	053-080-132T	G19 G20	5-0 5-0
011	COT011TX COT011RX	053-071-032T	G19 G20	4-10 4-10
020	COT020TX COT020RX	053-086-000T	G19 G20	5-0 5-0
021	COT021TX COT021RX	053-072-400T	G19 G20	4-10 4-10
030	COT030TX COT030RX	053-080-100T	G19 G20	5-0 5-0
031	COT031TX COT031RX	053-071-000T	G19 G20	4-10 4-10
040	COT040TX COT040RX	045-086-032B	G19 G20	5-11 5-11
041	COT041TX COT041RX	045-072-432B	G19 G20	5-9 5-9
050	COT050TX COT050RX	045-080-132B	G19 G20	5-11 5-11
051	COT051TX COT051RX	045-071-032B	G19 G20	5-9 5-9
100	COT100TX COT100RX	053-106-432T	G19 G20	5-0 5-0
101	COT101TX COT101RX	053-120-032T	G19 G20	4-10 4-10
110	COT110TX COT110RX	053-105-032T	G19 G20	5-0 5-0
111	COT111TX COT111RX	053-114-132T	G19 G20	4-10 4-10
120	COT120TX COT120RX	053-106-400T	G19 G20	5-0 5-0
121	COT121TX COT121RX	053-120-000T	G19 G20	4-10 4-10

*** CONTINUED ***

** CONTINUED **

BX-5

130	COT130TX COT130RX	053-105-000T	G19 G20	5-0 5-0
131	COT131TX COT131RX	053-114-100T	G19 G20	4-10 4-10
140	COT140TX COT140RX	045-106-432B	G19 G20	5-0 5-0
141	COT141TX COT141RX	045-120-032B	G19 G20	4-10 4-10
150	COT150TX COT150RX	045-105-032B	G19 G20	5-0 5-0
151	COT151TX COT151RX	045-114-100B	G19 G20	4-10 4-10

BX-6

PCT LINKS CONNECTIONS FOR PSU2 DF2(UN592) [218]

PSU2

CKT	CABLE DESIGN	PSU2 982TN EQL	CABLE ASSEMBLY ED5D518-30	DROP LENGTH
0	JL113/ JL111	019-088-132	G19 G20	6-3
1	JL113A/ JL111A	019-100-132	G19 G20	6-5
0	JL113/ JL111	028-088-132	G19 G20	5-6
1	JL113A/ JL111A	028-100-132	G19 G20	5-8
0	JL113/ JL111	045-088-132	G19 G20	4-0
1	JL113A/ JL111A	045-100-132	G19 G20	4-2
0	JL113/ JL111	053-088-132	G19 G20	3-3
1	JL113A/ JL111A	053-100-132	G19 G20	3-5
0	JL113/ JL111	063-088-132	G19 G20	2-7
1	JL113A/ JL111A	063-100-132	G19 G20	2-9

COPYRIGHT @ 2001 LUCENT TECHNOLOGIES
ALL RIGHTS RESERVED

BT13

INTERCABINET CABLING
FOR
5ESS * SWITCH
*LUCENT TRADEMARK

DWG SIZE C2 | ISSUE 117

LUCENT TECHNOLOGIES INC | ED5D500-21 | SHEET D15 OF 292

PRINTED IN U.S.A.

DE

FUSE LOCATIONS AND ASSOCIATED RETURN TERMINALS FOR J5D003AU

FL					FL					FL				
FUSE	-48V00 FUSES		TS 02-020		FUSE	-48V10 FUSES		TS 02-114		FUSE	-48V00 FUSES		TS 02-020	
	EQL	TERM	FUSE TERM	RTN TERM		EQL	TERM	FUSE TERM	RTN TERM		EQL	TERM	FUSE TERM	RTN TERM
1T	018	4T	03	02	13T	112	4T	03	02	1X	03-	8	15	14
1B		4B	01	00	13B		4B	01	00	2X	042	7	25	24
2T		3T	13	12	14T		3T	13	12	3X		6	35	34
2B		3B	11	10	14B		3B	11	10	4X		5	45	44
3T		2T	23	22	15T		2T	23	22	FUSE	-48V01 FUSES		TS 02-072	
3B		2B	21	20	15B		2B	21	20		EQL	TERM	FUSE TERM	RTN TERM
4T		1T	33	32	16T		1T	33	32					
4B		1B	31	30	16B		1B	31	30	5X	03-	4	15	14
5T	042	4T	43	42	17T	136	4T	43	42	6X	042	3	25	24
5B		4B	41	40	17B		4B	41	40	7X		2	35	34
6T		3T	53	52	18T		3T	53	52	8X		1	45	44
6B		3B	51	50	18B		3B	51	50	FUSE	-48V10 FUSES		TS 02-114	
FUSE	-48V01 FUSES		TS 02-072		FUSE	-48V11 FUSES		TS 02-166			EQL	TERM	FUSE TERM	RTN TERM
	EQL	TERM	FUSE TERM	RTN TERM		EQL	TERM	FUSE TERM	RTN TERM					
7T	042	2T	03	02	19T	136	2T	03	02	9X	03-	8	15	14
7B		2B	01	00	19B		2B	01	00	10X	136	7	25	24
8T		1T	13	12	20T		1T	13	12	11X		6	35	34
8B		1B	11	10	20B		1B	11	10	12X		5	45	44
9T	066	4T	23	22	21T	160	4T	23	22	FUSE	-48V11 FUSES		TS 02-166	
9B		4B	21	20	21B		4B	21	20		EQL	TERM	FUSE TERM	RTN TERM
10T		3T	33	32	22T		3T	33	32	13X	03-	4	15	14
10B		3B	31	30	22B		3B	31	30	14X	136	3	25	24
11T		2T	43	42	23T		2T	43	42	15X		2	35	34
11B		2B	41	40	23B		2B	41	40	16X		1	45	44
12T		1T	53	52	24T		1T	53	52					
12B		1B	51	50	24B		1B	51	50					

J2

DNU-S CONNECTIONS FOR DSX

DNU-S (0)

DATA GRP		EQL VERT	EQL HOR	EQL SLI	NET NAME	CA ASSEMBLY ED5D803-36	CA DESIG
0		( )19	008	00	SLI00RX SLI00TX	G1 G1A	JR370R JR370T

*** CONTINUED ***

** CONTINUED **

J2

DNU-S CONNECTIONS FOR DSX

DNU-S (0)

				01	SLI01RX SLI01TX	G1 G1A	JR370R JR370T
				02	SLI02RX SLI02TX	G1 G1A	JR370R JR370T
		( )28		03	SLI03RX SLI03TX	G1 G1A	JR370R JR370T
				04	SLI04RX SLI04TX	G1 G1A	JR370R JR370T
				05	SLI05RX SLI05TX	G1 G1A	JR370R JR370T
1		( )19	180	10	SLI10RX SLI10TX	G1 G1A	JR370R JR370T
				11	SLI11RX SLI11TX	G1 G1A	JR370R JR370T
				12	SLI12RX SLI12TX	G1 G1A	JR370R JR370T
		( )28		13	SLI13RX SLI13TX	G1 G1A	JR370R JR370T
				14	SLI14RX SLI14TX	G1 G1A	JR370R JR370T
				15	SLI15RX SLI15TX	G1 G1A	JR370R JR370T

CONT

DNU-S (1)

DATA GRP		EQL VERT	EQL HOR	EQL SLI	NET NAME	CA ASSEMBLY ED5D803-36	CA DESIG
0		( )45	008	00	SLI00RX SLI00TX	G1 G1A	JR370R JR370T
				01	SLI01RX SLI01TX	G1 G1A	JR370R JR370T
				02	SLI02RX SLI02TX	G1 G1A	JR370R JR370T
		( )53		03	SLI03RX SLI03TX	G1 G1A	JR370R JR370T
				04	SLI04RX SLI04TX	G1 G1A	JR370R JR370T
				05	SLI05RX SLI05TX	G1 G1A	JR370R JR370T
1		( )45	180	10	SLI10RX SLI10TX	G1 G1A	JR370R JR370T
				11	SLI11RX SLI11TX	G1 G1A	JR370R JR370T
				12	SLI12RX SLI12TX	G1 G1A	JR370R JR370T
		( )53		13	SLI13RX SLI13TX	G1 G1A	JR370R JR370T
				14	SLI14RX SLI14TX	G1 G1A	JR370R JR370T
				15	SLI15RX SLI15TX	G1 G1A	JR370R JR370T

*** CONTINUED ***

** CONTINUED **

J2

DNU-S CONNECTIONS FOR DSX

DNU-S (0)

J3

DNU-S CONNECTIONS FOR DSX

DNU-S (0)

DATA GRP		EQL VERT	EQL HOR	EQL SLI	NET NAME	CA ASSEMBLY ED5D803-36	
0		( )19	008	00	SLI00RX SLI00TX	G2 G2A	JR371R JR371T
				01	SLI01RX SLI01TX	G2 G2A	JR371R JR371T
				02	SLI02RX SLI02TX	G2 G2A	JR371R JR371T
		( )28		03	SLI03RX SLI03TX	G2 G2A	JR371R JR371T
				04	SLI04RX SLI04TX	G2 G2A	JR371R JR371T
				05	SLI05RX SLI05TX	G2 G2A	JR371R JR371T
1		( )19	180	10	SLI10RX SLI10TX	G2 G2A	JR371R JR371T
				11	SLI11RX SLI11TX	G2 G2A	JR371R JR371T
				12	SLI12RX SLI12TX	G2 G2A	JR371R JR371T
		( )28		13	SLI13RX SLI13TX	G2 G2A	JR371R JR371T
				14	SLI14RX SLI14TX	G2 G2A	JR371R JR371T
				15	SLI15RX SLI15TX	G2 G2A	JR371R JR371T

CONT

DNU-S (1)

DATA GRP		EQL VERT	EQL HOR	EQL SLI	NET NAME	CA ASSEMBLY ED5D803-36	CA DESIG
0		( )45	008	00	SLI00RX SLI00TX	G2 G2A	JR371R JR371T
				01	SLI01RX SLI01TX	G2 G2A	JR371R JR371T
				02	SLI02RX SLI02TX	G2 G2A	JR371R JR371T
		( )53		03	SLI03RX SLI03TX	G2 G2A	JR371R JR371T
				04	SLI04RX SLI04TX	G2 G2A	JR371R JR371T
				05	SLI05RX SLI05TX	G2 G2A	JR371R JR371T
1		( )45	180	10	SLI10RX	G2	JR371R

*** CONTINUED ***

COPYRIGHT @ 2001 LUCENT TECHNOLOGIES
ALL RIGHTS RESERVED

BT13

INTERCABINET CABLING
FOR
5ESS * SWITCH
*LUCENT TRADEMARK

DWG SIZE C2 | ISSUE 117

LUCENT TECHNOLOGIES INC | ED5D500-21 | SHEET D16 OF 292

PRINTED IN U.S.A.

** CONTINUED **

J3

DNU-S CONNECTIONS FOR DSX

DNU-S (0)

					SLI10TX	G2A	JR371T
				11	SLI11RX SLI11TX	G2 G2A	JR371R JR371T
				12	SLI12RX SLI12TX	G2 G2A	JR371R JR371T
		( )53		13	SLI13RX SLI13TX	G2 G2A	JR371R JR371T
				14	SLI14RX SLI14TX	G2 G2A	JR371R JR371T
				15	SLI15RX SLI15TX	G2 G2A	JR371R JR371T

J4

DNU-S CONNECTIONS FOR DSX

DNU-S (0)

DATA GRP		EQL VERT	EQL HOR	EQL SLI	NET NAME	CA ASSEMBLY ED5D803-37	CA DESIG
0		( )19	008	00	SLI00RX SLI00TX	G1 G1A	JR373R JR373T
				01	SLI01RX SLI01TX	G1 G1A	JR373R JR373T
				02	SLI02RX SLI02TX	G1 G1A	JR373R JR373T
		( )28		03	SLI03RX SLI03TX	G1 G1A	JR373R JR373T
				04	SLI04RX SLI04TX	G1 G1A	JR373R JR373T
				05	SLI05RX SLI05TX	G1 G1A	JR373R JR373T
1		( )19	180	10	SLI10RX SLI10TX	G1 G1A	JR373R JR373T
				11	SLI11RX SLI11TX	G1 G1A	JR373R JR373T
				12	SLI12RX SLI12TX	G1 G1A	JR373R JR373T
		( )28		13	SLI13RX SLI13TX	G1 G1A	JR373R JR373T
				14	SLI14RX SLI14TX	G1 G1A	JR373R JR373T
				15	SLI15RX SLI15TX	G1 G1A	JR373R JR373T

CONT

DNU-S (1)

DATA GRP		EQL VERT	EQL HOR	EQL SLI	NET NAME	CA ASSEMBLY ED5D803-37	CA DESIG
0		( )45	008	00	SLI00RX SLI00TX	G1 G1A	JR373R JR373T

*** CONTINUED ***

** CONTINUED **

J4

				01	SLI01RX SLI01TX	G1 G1A	JR373R JR373T
				02	SLI02RX SLI02TX	G1 G1A	JR373R JR373T
		( )53		03	SLI03RX SLI03TX	G1 G1A	JR373R JR373T
				04	SLI04RX SLI04TX	G1 G1A	JR373R JR373T
				05	SLI05RX SLI05TX	G1 G1A	JR373R JR373T
1		( )45	180	10	SLI10RX SLI10TX	G1 G1A	JR373R JR373T
				11	SLI11RX SLI11TX	G1 G1A	JR373R JR373T
				12	SLI12RX SLI12TX	G1 G1A	JR373R JR373T
		( )53		13	SLI13RX SLI13TX	G1 G1A	JR373R JR373T
				14	SLI14RX SLI14TX	G1 G1A	JR373R JR373T
				15	SLI15RX SLI15TX	G1 G1A	JR373R JR373T

J5

DNU-S CONNECTIONS FOR DSX

DNU-S (0)

DATA GRP		EQL VERT	EQL HOR	EQL SLI	NET NAME	CA ASSEMBLY ED5D803-37	
0		( )19	008	00	SLI00RX SLI00TX	G2 G2A	JR374R JR374T
				01	SLI01RX SLI01TX	G2 G2A	JR374R JR374T
				02	SLI02RX SLI02TX	G2 G2A	JR374R JR374T
		( )28		03	SLI03RX SLI03TX	G2 G2A	JR374R JR374T
				04	SLI04RX SLI04TX	G2 G2A	JR374R JR374T
				05	SLI05RX SLI05TX	G2 G2A	JR374R JR374T
1		( )19	180	10	SLI10RX SLI10TX	G2 G2A	JR374R JR374T
				11	SLI11RX SLI11TX	G2 G2A	JR374R JR374T
				12	SLI12RX SLI12TX	G2 G2A	JR374R JR374T
		( )28		13	SLI13RX SLI13TX	G2 G2A	JR374R JR374T
				14	SLI14RX SLI14TX	G2 G2A	JR374R JR374T
				15	SLI15RX	G2	JR374R

*** CONTINUED ***

** CONTINUED **

J5

					SLI15TX	G2A	JR374T

CONT

DNU-S (1)

DATA GRP		EQL VERT	EQL HOR	EQL SLI	NET NAME	CA ASSEMBLY ED5D803-37	CA DESIG
0		( )45	008	00	SLI00RX SLI00TX	G2 G2A	JR374R JR374T
				01	SLI01RX SLI01TX	G2 G2A	JR374R JR374T
				02	SLI02RX SLI02TX	G2 G2A	JR374R JR374T
		( )53		03	SLI03RX SLI03TX	G2 G2A	JR374R JR374T
				04	SLI04RX SLI04TX	G2 G2A	JR374R JR374T
				05	SLI05RX SLI05TX	G2 G2A	JR374R JR374T
1		( )45	180	10	SLI10RX SLI10TX	G2 G2A	JR374R JR374T
				11	SLI11RX SLI11TX	G2 G2A	JR374R JR374T
				12	SLI12RX SLI12TX	G2 G2A	JR374R JR374T
		( )53		13	SLI13RX SLI13TX	G2 G2A	JR374R JR374T
				14	SLI14RX SLI14TX	G2 G2A	JR374R JR374T
				15	SLI15RX SLI15TX	G2 G2A	JR374R JR374T

J6

DNU-S CONNETIIONS FOR DSX

DNU-S (0)

DATA GRP		EQL VERT	EQL HOR	EQL SLI	NET NAME	CA ASSEMBLY ED5D803-36	CA DESIG
0		( )19	008	00	SLI00RX SLI00TX	G23	JR370A
				01	SLI01RX SLI01TX		
				02	SLI02RX SLI02TX SPARE0RX SPARE0TX		
		( )53		03	SLI03RX SLI03TX		
				04	SLI04RX SLI04TX		
				05	SLI05RX SLI05TX SPARE0RX SPARE0TX		
1		( )45	180	10	SLI10RX SLI10TX		
				11	SLI11RX SLI11TX		
				12	SLI12RX SLI12TX SPARE1RX SPARE1TX		
		( )28		13	SLI13RX SLI13TX		
				14	SLI14RX SLI14TX		
				15	SLI15RX SLI15TX SPARE1RX SPARE1TX		

*** CONTINUED ***

** CONTINUED **

J6

DNU-S CONNETIIONS FOR DSX

DNU-S (0)

DATA GRP		EQL VERT	EQL HOR	EQL SLI	NET NAME	CA ASSEMBLY ED5D803-36	CA DESIG
1		( )19	180	10	SLI10RX SLI10TX		
				11	SLI11RX SLI11TX		
				12	SLI12RX SLI12TX SPARE1RX SPARE1TX		
		( )28		13	SLI13RX SLI13TX		
				14	SLI14RX SLI14TX		
				15	SLI15RX SLI15TX SPARE1RX SPARE1TX		

DNU-S (1)

DATA GRP		EQL VERT	EQL HOR	EQL SLI	NET NAME	CA ASSEMBLY ED5D803-36	CA DESIG
0		( )45	008	00	SLI00RX SLI00TX	G23	JR370A
				01	SLI01RX SLI01TX		
				02	SLI02RX SLI02TX SPARE0RX SPARE0TX		
		( )53		03	SLI03RX SLI03TX		
				04	SLI04RX SLI04TX		
				05	SLI05RX SLI05TX SPARE0RX SPARE0TX		
1		( )45	180	10	SLI10RX SLI10TX		
				11	SLI11RX SLI11TX		
				12	SLI12RX SLI12TX SPARE1RX SPARE1TX		
		( )53		13	SLI13RX SLI13TX		
				14	SLI14RX SLI14TX		
				15	SLI15RX SLI15TX SPARE1RX SPARE1TX		

COPYRIGHT @ 2001 LUCENT TECHNOLOGIES
ALL RIGHTS RESERVED

BT13

INTERCABINET CABLING
FOR
5ESS * SWITCH
*LUCENT TRADEMARK

DWG SIZE C2 | ISSUE 117

LUCENT TECHNOLOGIES INC | ED5D500-21 | SHEET D17 OF 292

PRINTED IN U.S.A.

KA1

INTERCABINET COMMUNICATION CIRCUIT

FROM							TO	CABLE ASSEMBLY ED5D505-30 ORDER GROUP	CABLE DESIG
ED5D500-21 ORDER GROUP	CABINET	F/F TYPE	POS 1 EQL	POS 1 TERM	POS	DROP LGTH			
41C,137	STD SMC	AU	()69-044	501	L	1-9 /R/	DF	159	JV159
41C,137	RECNFGR SMC	AU	()69-137	501	R	7-11 /P/	DF	159	JV159
41D	CM2	BJ	()69-044	501	L		DF	159A	JV159A
41D	RECNFGR SMC	BT	()69-137	501	R		DF	159A	JV159A

KA2

INTERCABINET COMMUNICATION CIRCUIT

FROM							TO							CABLE ASSEMBLY ED5D505-30 ORDER GROUP	CABLE DESIG
ED5D500-21 ORDER GROUP	CABINET	F/F TYPE	CONN POS 1 EQL	CONN POS 1 TERM	POS	DROP LGTH	CABINET	F/F TYPE	CONN POS 2 EQL	CONN POS 2 TERM	POS	DROP LGTH			
42A	STD SMC	AU	()69-044	701	L	1-9 /R/	STD SMC	AU	()69-044	501	L	1-9 /R/		161	JV161
42A	STD SMC	AU	()69-044	701	L	7-11 /P/	RECNFGR SMC	AU	()69-137	501	R	7-11 /P/		161	JV161
42A	RECNFGR SMC	AU	()69-137	701	R		STD SMC	AU	()69-044	501	L			161	JV161
42A	RECNFGR SMC	AU	()69-137	701	R		RECNFGR SMC	AU	()69-137	501	R			161	JV161
42B	CM2	BJ	()69-044	701	L		CM2	BJ	()69-044	501	L			161A	JV161A
42B	RECNFGR SMC	BT	()69-137	701	R		RECNFGR SMC	BT	()69-137	501	R			161A	JV161A
42B	CM2	BJ	()69-044	701	L		RECNFGR SMC	BT	()69-137	501	R			161A	JV161A
42B	RECNFGR SMC	BT	()69-137	701	R		CM2	BJ	()69-044	501	L			161A	JV161A
42C	STD SMC	AU	()69-044	701	L		CM2	BJ	()69-044	501	L			161B	JV161B
42C	RECNFGR SMC	AU	()69-137	701	R		CM2	BJ	()69-044	501	L			161B	JV161B
42C	STD SMC	AU	()69-044	701	L		RECNFGR SMC	BT	()69-137	501	R			161B	JV161B
42C	RECNFGR SMC	AU	()69-137	701	R		RECNFGR SMC	BT	()69-137	501	R			161B	JV161B
42D	CM2	BJ	()69-044	701	L		STD SMC	AU	()69-044	501	L			161C	JV161C
42D	CM2	BJ	()69-044	701	L		RECNFGR SMC	AU	()69-137	501	R			161C	JV161C
42D	RECNFGR SMC	BT	()69-137	701	R		STD SMC	AU	()69-044	501	L			161C	JV161C
42D	RECNFGR SMC	BT	()69-137	701	R		RECNFGR SMC	AU	()69-137	501	R			161C	JV161C

KA3

INTERCABINET COMMUNICATIONS CIRCUIT (FOR CABINETS E/W MOD F/F PNL) [715]

FROM							TO	CABLE ASSEMBLY ED5D505-30 ORDER GROUP	CABLE DESIG
ED5D500-21 ORDER GROUP	CABINET	FUSE/ FILTER TYPE	CONN POS J1 EQL	CONN POS J1 TERM	POS	DROP LGTH			
41E,137A	STD SM	3FJ (MOD)	()69-109	000	L	1-9 /R/	DF	159B	JV159B
41E	2 SM'S IN SMC	3FJ (MOD)	()69-141	000	L	7-11 /P/	DF	159B	JV159B
41E	CM2	3FJ (MOD)	()69-168	000	L		DF	159B	JV159B
41E	RING NODE	3FJ (MOD)	()69-109	000	L		DF	159B	JV159B

NOTE: CLASSIC EQL (FIRST EQL SET IS 3 DIGITS)
EXAMPLE: 169
SM2000 EQL (FIRST EQL SET IS 5 DIGITS)
EXAMPLE: 00069

KA4

INTERCABINET COMMUNICATION CIRCUIT (E/W MODULAR F/F PNL) [720]

FROM						TO					CABLE ASSEMBLY ED5D505-30 ORDER GROUP	CABLE DESIG
ED5D500-21 ORDER GROUP	CABINET	F/F TYPE	CONN POS J1 EQL	POS	DROP LGTH	CABINET	F/F TYPE	CONN POS J2 EQL	POS	DROP LGTH		
42E	STD SMC	FJ (MOD)	()69-109-100	L	1-9 /R/	RECNFGR SMC	AU	()69-137-501	R	1-9 /R/	161D	JV161D
42E	CM2	FJ (MOD)	()69-168-100	L	7-11 /P/	RECNFGR SMC	AU	()69-137-501	R	7-11 /P/	161D	JV161D
42E	2SM IN SMC	FJ (MOD)	()69-141-100	L		RECNFGR SMC	AU	()69-137-501	R		161D	JV161D
42E	SM2K LTP( )	FJ (MOD)	()69-109-100	L		RECNFGR SMC	AU	()69-137-501	R		161D	JV161D
42E	CM2	FJ (MOD)	()69-168-100	L		STD SMC	AU	()69-044-501	L		161D	JV161D
42E	STD SMC	FJ (MOD)	()69-109-100	L		STD SMC	AU	()69-044-501	L		161D	JV161D
42E	2SM IN SMC	FJ (MOD)	()69-141-100	L		STD SMC	AU	()69-044-501	L		161D	JV161D
42E	SM2K LTP( )	FJ (MOD)	()69-109-100	L		STD SMC	AU	()69-044-501	L		161D	JV161D
42F	STD SMC	FJ (MOD)	()69-109-100	L		CM2	BJ	()69-044-501	L		161E	JV161E
42F	STD SMC	FJ (MOD)	()69-109-100	L		RECNFGR SMC	BT	()69-137-501	R		161E	JV161E
42F	STD SMC	FJ (MOD)	()69-109-100	L		RING NODE	AU	()69-044-501	L		161E	JV161E
42F	CM2	FJ (MOD)	()69-168-100	L		CM2	BJ	()69-044-501	L		161E	JV161E
42F	CM2	FJ (MOD)	()69-168-100	L		RECNFGR SMC	BT	()69-137-501	R		161E	JV161E
42F	CM2	FJ (MOD)	()69-168-100	L		RING NODE	AU	()69-044-501	L		161E	JV161E

*** CONTINUED ***

COPYRIGHT @ 2001 LUCENT TECHNOLOGIES
ALL RIGHTS RESERVED

BT13

INTERCABINET CABLING
FOR
5ESS * SWITCH
*LUCENT TRADEMARK

DWG SIZE C2 | ISSUE 117

** CONTINUED **
KA4

42F	2SM IN SMC	FJ (MOD)	()69-141-100	L		CM2	BJ	()69-044-501	L		161E	JV161E			
42F	2SM IN SMC	FJ (MOD)	()69-141-100	L		RECNFGR SMC	BT	()69-137-501	R		161E	JV161E			
42F	2SM IN SMC	FJ (MOD)	()69-141-100	L		RING NODE	AU	()69-044-501	L		161E	JV161E			
42F	SM2K LTP( )	FJ (MOD)	()69-109-100	L		CM2	BJ	()69-044-501	L		161E	JV161E			
42F	SM2K LTP( )	FJ (MOD)	()69-109-100	L		RECNFGR SMC	BT	()69-137-501	R		161E	JV161E			
42F	SM2K LTP( )	FJ (MOD)	()69-109-100	L		RING NODE	AU	()69-044-501	L		161E	JV161E			
42G	RECNFGR SMC	AU	()69-137-701	R		STD SMC	FJ (MOD)	()69-109-000	L		161F	JV161F			
42G	RECNFGR SMC	AU	()69-137-701	R		CM2	FJ (MOD)	()69-168-000	L		161F	JV161F			
42G	RECNFGR SMC	AU	()69-137-701	R		2SM IN SMC	FJ (MOD)	()69-141-000	L		161F	JV161F			
42G	RECNFGR SMC	AU	()69-137-701	R		SM2K LTP( )	FJ (MOD)	()69-109-100	L		161F	JV161F			
42G	STD SMC	AU	()69-044-701	L		STD SMC	FJ (MOD)	()69-109-000	L		161F	JV161F			
42G	STD SMC	AU	()69-044-701	L		CM2	FJ (MOD)	()69-168-000	L		161F	JV161F			
42G	STD SMC	AU	()69-044-701	L		2SM IN SMC	FJ (MOD)	()69-141-000	L		161F	JV161F			
42G	STD SMC	AU	()69-044-701	L		SM2K LTP( )	FJ (MOD)	()69-109-100	L		161F	JV161F			
42H	CM2	BJ	()69-044-701	L		STD SMC	FJ (MOD)	()69-109-000	L		161G	JV161G			
42H	RECNFGR SMC	BT	()69-137-701	R		STD SMC	FJ (MOD)	()69-109-000	L		161G	JV161G			
42H	CM2	BJ	()69-044-701	L		CM2	FJ (MOD)	()69-168-000	L		161G	JV161G			
42H	RECNFGR SMC	BT	()69-137-701	R		CM2	FJ (MOD)	()69-168-000	L		161G	JV161G			
42H	CM2	BJ	()69-044-701	L		2SM IN SMC	FJ (MOD)	()69-141-000	L		161G	JV161G			
42H	RECNFGR SMC	BT	()69-137-701	R		2SM IN SMC	FJ (MOD)	()69-141-000	L		161G	JV161G			
42H	CM2	BJ	()69-044-701	L		SM2K LTP( )	FJ (MOD)	()69-109-000	L		161G	JV161G			
42H	RECNFGR SMC	BT	()69-137-701	R		SM2K LTP( )	FJ (MOD)	()69-109-000	L		161G	JV161G			
42J	STD SMC	FJ (MOD)	()69-109-100	L		STD SMC	FJ (MOD)	()69-109-000	L		161H	JV161H			
42J	STD SMC	FJ (MOD)	()69-109-100	L		CM2	FJ (MOD)	()69-168-000	L		161H	JV161H			
42J	STD SMC	FJ (MOD)	()69-109-100	L		2SM IN SMC	FJ (MOD)	()69-141-000	L		161H	JV161H			
42J	CM2	FJ (MOD)	()69-168-100	L		CM2	FJ (MOD)	()69-168-000	L		161H	JV161H			

*** CONTINUED ***

** CONTINUED **
KA4

42J	CM2	FJ (MOD)	()69-168-100	L		2SM IN SMC	FJ (MOD)	()69-141-000	L		161H	JV161H			
42J	CM2	FJ (MOD)	()69-168-100	L		STD SMC	FJ (MOD)	()69-109-000	L		161H	JV161H			
42J	2SM IN SMC	FJ (MOD)	()69-141-100	L		2SM IN SMC	FJ (MOD)	()69-141-000	L		161H	JV161H			
42J	2SM IN SMC	FJ (MOD)	()69-141-100	L		CM2	FJ (MOD)	()69-168-000	L		161H	JV161H			
42J	2SM IN SMC	FJ (MOD)	()69-141-100	L		STD SMC	FJ (MOD)	()69-109-000	L		161H	JV161H			
42J	DNU-S IN LTP LOCATED IN TRANS-MISSION AREA OUTSIDE 5E FOOT PRINT	FJ (MOD)	()69-091-100	L		2SM IN SMC	FJ (MOD)	()69-141-000	L		161H	JV161H			
						CM2	FJ (MOD)	()69-168-000	L		161H	JV161H			
						STD SMC	FJ	()69-109-000	L		161H	JV161H			
42J	RING NODE RN00/32 CAB (CNI)	FJ (MOD)	()69-109-100 OR ()69-109-000	L		2SM IN SMC	FJ (MOD)	()69-141-000	L		161H	JV161H			
						CM2	FJ (MOD)	()69-168-000	L		161H	JV161H			
						STD SMC	FJ (MOD)	()69-109-000	L		161H	JV161H			
						SM2K LTP( )	FJ (MOD)	()69-109-000	L		161H	JV161H			
42J	2SM IN SMC	FJ (MOD)	()69-141-100			RING NODE	FJ (MOD)	()69-044-000	L		161H	JV161H			
42J	CM2	FJ (MOD)	()69-168-100												
42J	STD SMC	FJ (MOD)	()69-109-100												
42J	SM2K LTP ( )	FJ (MOD)	()69-109-100												
42J	SM2K LTP ( )	FJ (MOD)	()69-109-100			2SM IN SMC	FJ (MOD)	()69-141-000	L		161H	JV161H			
						STD SMC	FJ (MOD)	()69-109-000	L		161H	JV161H			
						CM2	FJ (MOD)	()69-168-000	L		161H	JV161H			
						SM2K LTP( )	FJ (MOD)	()69-109-000	L		161H	JV161H			
42J	2SM IN SMC	FJ (MOD)	()69-141-100			SM2K LTP ( )	FJ (MOD)	()69-109-000	L		161H	JV161H			
42J	CM2	FJ (MOD)	()69-168-100												
42J	STD SMC	FJ (MOD)	()69-109-100												
42J	SM2K LTP( )	FJ (MOD)	()69-109-100												

NOTE:WHEN THE BELTLINE OPTION IS REQUIRED THE OPTIONAL TEL & TTY JACK PANEL IS REQUIRED IN EVERY THIRD CABINET LEFT AND RIGTH OF THE SMC AND THE SAME ACROSS THE AISLES AS REQUIRED. (LTP CABINETS TO BE EQUIPPED WITH BELTLINE OPTION ARE 005,006,011,012,100,200,205 AND 206).
NOTE: CLASSIC EQL (FIRST EQL SET IS 3 DIGITS)
EXAMPLE: 169
*** CONTINUED ***

COPYRIGHT @ 2001 LUCENT TECHNOLOGIES
ALL RIGHTS RESERVED

BT13

INTERCABINET CABLING
FOR
5ESS * SWITCH
*LUCENT TRADEMARK

DWG SIZE C2 | ISSUE 117

LUCENT TECHNOLOGIES INC | ED5D500-21 | SHEET D19 OF 292

PRINTED IN U.S.A.

** CONTINUED **
KA4

SM2000 EQL (FIRST EQL SET IS 5 DIGITS)
EXAMPLE: 00069

N5

SINGLE FABRIC ODL50
NCT LINKS FROM TSIU4-2(3NB-2) TO CM2

CABLE DESIG		JL113/JL112	JL111/JL110	JL113A/ JL112A	JL111A/ JL110A
NCT LINKS	PORT	TX	RX	TX	RX
		SIDE 0		SIDE 1	
SM () SMC 0	2	00051-029-TX	00051-029-RX	00051-111-TX	00051-111-RX
TSIU4 -2	3	00055-029-TX	00055-029-RX	00055-111-TX	00055-111-RX
J5D00 3NB-2	4	00043-037-TX	00043-037-RX	00043-119-TX	00043-119-RX
G13	5	00047-037-TX	00047-037-RX	00047-119-TX	00047-119-RX
	6	00051-037-TX	00051-037-RX	00051-119-TX	00051-119-RX
	7	00055-037-TX	00055-037-RX	00055-119-TX	00055-119-RX
	8	00043-045-TX	00043-045-RX	00043-127-TX	00043-127-RX
	9	00047-045-TX	00047-045-RX	00047-127-TX	00047-127-RX
	10	00051-045-TX	00051-045-RX	00051-127-TX	00051-127-RX
	11	00055-045-TX	00055-045-RX	00055-127-TX	00055-127-RX
	12	00043-053-TX	00043-053-RX	00043-135-TX	00043-135-RX
	13	00047-053-TX	00047-053-RX	00047-135-TX	00047-135-RX
	14	00051-053-TX	00051-053-RX	00051-135-TX	00051-135-RX
	15	00055-053-TX	00055-053-RX	00055-135-TX	00055-135-RX
	16	00043-061-TX	00043-061-RX	00043-143-TX	00043-143-RX
	17	00047-061-TX	00047-061-RX	00047-143-TX	00047-143-RX
	18	00051-061-TX	00051-061-RX	00051-143-TX	00051-143-RX
	19	00055-061-TX	00055-061-RX	00055-143-TX	00055-143-RX
	20	00043-069-TX	00043-069-RX	00043-151-TX	00043-151-RX
	21	00047-069-TX	00047-069-RX	00047-151-TX	00047-151-RX
	22	00051-069-TX	00051-069-RX	00051-151-TX	00051-151-RX
	23	00055-069-TX	00055-069-RX	00055-151-TX	00055-151-RX
	24	00043-077-TX	00043-077-RX	00043-159-TX	00043-159-RX
	25	00047-077-TX	00047-077-RX	00047-159-TX	00047-159-RX
	26	00051-077-TX	00051-077-RX	00051-159-TX	00051-159-RX
	27	00055-077-TX	00055-077-RX	00055-159-TX	00055-159-RX
	28	00043-085-TX	00043-085-RX	00043-167-TX	00043-167-RX
	29	00047-085-TX	00047-085-RX	00047-167-TX	00047-167-RX
	30	00051-085-TX	00051-085-RX	00051-167-TX	00051-167-RX
	31	00055-085-TX	00055-085-RX	00055-167-TX	00055-167-RX
	32	00043-093-TX	00043-093-RX	00043-175-TX	00043-175-RX

*** CONTINUED ***

** CONTINUED **
N5

	33	00047-093-TX	00047-093-RX	00047-175-TX	00047-175-RX
	34	00051-093-TX	00051-093-RX	00051-175-TX	00051-175-RX
	35	00055-093-TX	00055-093-RX	00055-175-TX	00055-175-RX
	36	00043-101-TX	00043-101-RX	00043-183-TX	00043-183-RX
	37	00047-101-TX	00047-101-RX	00047-183-TX	00047-183-RX
	38	00051-101-TX	00051-101-RX	00051-183-TX	00051-183-RX
	39	00055-101-TX	00055-101-RX	00055-183-TX	00055-183-RX

CM2 PORTS

SM NBR ( )	CM2 '0' SIDE BKF1				CM2 '1' SIDE BKF1			
	EVEN PORTS		ODD PORTS		EVEN PORTS		ODD PORTS	
	RA	TA	RB	TB	RA	TA	RB	TB

N6

[780,781]

PCT LINKS FROM TSIU4-2(3NB-2) TO PSU2

CABLE DESIG		JL113	JL111	JL113A	JL111A
NCT LINKS	PORT	TX	RX	TX	RX
		SIDE 0		SIDE 1	
SM/ / SMC 0	2	00051-029-TX	00051-029-RX	00051-111-TX	00051-111-RX
TSIU4 -2	3	00055-029-TX	00055-029-RX	00055-111-TX	00055-111-RX
J5D00 3NB-2	4	00043-037-TX	00043-037-RX	00043-119-TX	00043-119-RX
G17	5	00047-037-TX	00047-037-RX	00047-119-TX	00047-119-RX
	6	00051-037-TX	00051-037-RX	00051-119-TX	00051-119-RX
	7	00055-037-TX	00055-037-RX	00055-119-TX	00055-119-RX
	8	00043-045-TX	00043-045-RX	00043-127-TX	00043-127-RX
	9	00047-045-TX	00047-045-RX	00047-127-TX	00047-127-RX
	10	00051-045-TX	00051-045-RX	00051-127-TX	00051-127-RX
	11	00055-045-TX	00055-045-RX	00055-127-TX	00055-127-RX
	12	00043-053-TX	00043-053-RX	00043-135-TX	00043-135-RX
	13	00047-053-TX	00047-053-RX	00047-135-TX	00047-135-RX
	14	00051-053-TX	00051-053-RX	00051-135-TX	00051-135-RX
	15	00055-053-TX	00055-053-RX	00055-135-TX	00055-135-RX
	16	00043-061-TX	00043-061-RX	00043-143-TX	00043-143-RX
	17	00047-061-TX	00047-061-RX	00047-143-TX	00047-143-RX
	18	00051-061-TX	00051-061-RX	00051-143-TX	00051-143-RX
	19	00055-061-TX	00055-061-RX	00055-143-TX	00055-143-RX
	20	00043-069-TX	00043-069-RX	00043-151-TX	00043-151-RX
	21	00047-069-TX	00047-069-RX	00047-151-TX	00047-151-RX
	22	00051-069-TX	00051-069-RX	00051-151-TX	00051-151-RX

*** CONTINUED ***

** CONTINUED **
N6

	23	00055-069-TX	00055-069-RX	00055-151-TX	00055-151-RX
	24	00043-077-TX	00043-077-RX	00043-159-TX	00043-159-RX
	25	00047-077-TX	00047-077-RX	00047-159-TX	00047-159-RX
	26	00051-077-TX	00051-077-RX	00051-159-TX	00051-159-RX
	27	00055-077-TX	00055-077-RX	00055-159-TX	00055-159-RX
	28	00043-085-TX	00043-085-RX	00043-167-TX	00043-167-RX
	29	00047-085-TX	00047-085-RX	00047-167-TX	00047-167-RX
	30	00051-085-TX	00051-085-RX	00051-167-TX	00051-167-RX
	31	00055-085-TX	00055-085-RX	00055-167-TX	00055-167-RX
	32	00043-093-TX	00043-093-RX	00043-175-TX	00043-175-RX
	33	00047-093-TX	00047-093-RX	00047-175-TX	00047-175-RX
	34	00051-093-TX	00051-093-RX	00051-175-TX	00051-175-RX
	35	00055-093-TX	00055-093-RX	00055-175-TX	00055-175-RX
	36	00043-101-TX	00043-101-RX	00043-183-TX	00043-183-RX
	37	00047-101-TX	00047-101-RX	00047-183-TX	00047-183-RX
	38	00051-101-TX	00051-101-RX	00051-183-TX	00051-183-RX
	39	00055-101-TX	00055-101-RX	00055-183-TX	00055-183-RX

PSU2 PORTS

SM NBR ( )	PSU2 '0' SIDE 982TN				PSU2 '1' SIDE 982TN			
	EVEN PORTS		ODD PORTS		EVEN PORTS		ODD PORTS	
	RA	TA	RB	TB	RA	TA	RB	TB

ST

APPLICATION(S) DATA LINK CABLE EQL STAMPING TABLE
CONNECTOR - 1 STAMPING [1100-1103]

CABLE DESIGNATION	IOP-PC SLOT NUMBER IOP NO	PC COMM NO	PC SLOT NO	CABINET EQL	SLOT EQL	TERMINAL EQL
	0	0	0		N/A	SEE NOTE 1
	0	0	1		102	SEE NOTE 3
	0	0	2		N/A	SEE NOTE 1
	0	0	3		118	
	0	1	0	19	130	
	0	1	1		138	
	0	1	2		146	
APPLICATION SPECIFIC OPTION SEE NOTE 2	0	1	3		154	SEE NOTE 3
	0	2	0		094	
	0	2	1		102	
	0	2	2		110	
	0	2	3		118	

*** CONTINUED ***

COPYRIGHT @ 2001 LUCENT TECHNOLOGIES
ALL RIGHTS RESERVED

BT13

INTERCABINET CABLING
FOR
5ESS * SWITCH
*LUCENT TRADEMARK

DWG SIZE C2 | ISSUE 117

LUCENT TECHNOLOGIES INC | ED5D500-21 | SHEET D20 OF 292

PRINTED IN U.S.A.

** CONTINUED **
ST

APPLICATION(S) DATA LINK CABLE EQL STAMPING TABLE
CONNECTOR - 1 STAMPING [1100-1103]

CABLE DESIGNATION	IOP-PC SLOT NUMBER			CABINET EQL	SLOT EQL	TERMINAL EQL
	IOP NO	PC COMM NO	PC SLOT NO			
				28		
	0	3	0		N/A	SEE NOTE 4
	0	3	1		138	
	0	3	2		146	SEE NOTE 3
	N/A	N/A	N/A		N/A	
	1	0	0		N/A	SEE NOTE 1
	1	0	1		102	SEE NOTE 3
	1	0	2		N/A	SEE NOTE 1
	1	0	3		118	
	1	1	0	45	130	
	1	1	1		138	
	1	1	2		146	
APPLICATION SPECIFIC OPTION SEE NOTE 2	1	1	3		154	
	1	2	0		094	
	1	2	1		102	SEE NOTE 3
	1	2	2		110	
	1	2	3		118	
	1	3	0	53	130	
	1	3	1		138	
	1	3	2		146	
	NA	NA	NA		NA	
	2	0	0		040	
	2	0	1		048	
	2	0	2		056	
	2	0	3		064	
	2	1	0		072	
	2	1	1		080	
	2	1	2		088	
APPLICATION SPECIFIC OPTION SEE NOTE 2	2	1	3	11	096	SEE NOTE 3
	2	2	0		108	
	2	2	1		116	
	2	2	2		124	
	2	2	3		132	
	2	3	0		140	
	2	3	1		148	

*** CONTINUED ***

** CONTINUED **
ST

APPLICATION(S) DATA LINK CABLE EQL STAMPING TABLE
CONNECTOR - 1 STAMPING [1100-1103]

CABLE DESIGNATION	IOP-PC SLOT NUMBER			CABINET EQL	SLOT EQL	TERMINAL EQL
	IOP NO	PC COMM NO	PC SLOT NO			
	2	3	2		156	
	2	3	3		164	
	3	0	0		040	
	3	0	1		048	
	3	0	2		056	
	3	0	3		064	
	3	1	0		072	
	3	1	1		080	
	3	1	2		088	
APPLICATION SPECIFIC OPTION SEE NOTE 2	3	1	3		096	
	3	2	0	62	108	SEE NOTE 3
	3	2	1		116	
	3	2	2		124	
	3	2	3		132	
	3	3	0		140	
	3	3	1		148	
	3	3	2		156	
	3	3	3		164	

NOTES
1. RESERVED FOR 3B21D
2. TO OBTAIN AN UNIQUE FOUR DIGIT DESIGNATION CODE USE:
   A) THREE DIGITS OF THE IOP-PC SLOT NUMBER AS FIRST THREE DIGITS OF THE FOUR DIGIT DESIGNATION AND,
   B) PC-PORT NUMBER (0, 1, 2, OR 3 AS APPLICABLE) FROM TABLE STA AS FOURTH DIGIT OF THE FOUR DIGIT DESIGNATION CODE.
3. USE TABLE STA TO IDENTIFY TERMINAL EQL STAMPING FOR THE PC CABLE.
4. RESERVED FOR 3B21D SC/SD POINTS WHEN MORE THAN SIX DISKS ARE REQUIRED.

STA

TERMINAL EQL [1110]

CABLE GROUPS ED3T076-20 G50, G52 TO G60		CABLE GROUPS ED3T076-20 G61, G62, G65		
PC-PORT NO.	TERMINAL NO.	PC-PORT NO.	TERMINAL NO.	
			TOP CONN 1	BOTTOM CONN 2
0	132	0	145	132
1	332	1	345	332
2	532	2	545	532
3	500	3	513	500

NOTE: LINE ENGINEER IS RESPONSIBLE FOR ASSIGNING THE REQUIRED PORT ASSIGNMENTS AND ASSOCIATED TERMINAL NUMBERING. (ASSIGNMENTS SHOULD START WITH THE FIRST UNUSED PORT AVAILABLE)

STB

APPLICATION DATA LINK CABLE DEVICE STAMPING TABLE
CONNECTOR -2 DEVICE STAMPING [1115]

ED3T076-20 CABLE GROUP	DEVICE TYPE	STAMPING CODE
50	RS232C, SYNCHRONOUS DATA SET	DS 201C OR DS 212AR
52, 52A	RS232C, ASYNCHRONOUS DATA SET	DS 202T
54	RS232C, ASYNCHRONOUS DATA SET	DS 212AR
55	RS232C, ASYNCHRONOUS DATA SET	DS STU1900
56, 56A	RS232C, ASYNCHRONOUS ROP	ROP
57, 57A	RS232C, ASYNCHRONOUS VIDEO TERMINAL -100	VT100
58, 58A	RS232C, ASYNCHRONOUS VIDEO TERMINAL	VT
59	RS232C, ASYNCHRONOUS DATA SET	DS( )
60	RS232C, ASYNCHRONOUS DATA SET-NULL MODEM	DS( )
61,65	RS449, DATA SET	CONN 3 DS 2024A, DS 2048A OR DS 2096A
62	V.35/V.36 DATA SET	CONN 3 DS 2556B
53, 53A	RS232C, ASYNCHRONOUS DATA SET	DS 3309

COPYRIGHT @ 2001 LUCENT TECHNOLOGIES
ALL RIGHTS RESERVED

BT13

INTERCABINET CABLING
FOR
5ESS * SWITCH
*LUCENT TRADEMARK

DWG SIZE C2 | ISSUE 117

PRINTED IN U.S.A.

STC

PERIPHERAL CONTROLLER CIRCUIT PACK CABLE CROSS REFERENCE [1120]

FIRST GENERATION PERIPHERAL CONTROLLER CP AND CABLES			SECOND GENERATION PERIPHERAL CONTROLLER CP AND CABLES		
CP	ED5D517-30	ED5D500-21	ED3T076-20	CP	
TN75	1,5,5B	37,43,43B	43C	50	UN582
TN83B/ TN983	2	38	38A	51	UN583
TN74B	3,15	39,71	39F,39G	52,52A	UN582
TN74B	3A,15A	39C,39D	39H,39J	53,53A	UN582
TN74B	12	43A	43D	54	UN582
TN74B	22	39E	39K	55	UN582
TN82	16	72	72C	62	UN582
	ED5D502-30				
TN74B	10,14 11,15 13,16	60,64 61,65 63,66	63A,66A 63B,66B 63C,66C	56,56A 57,57A 58,58A	UN582
			73	59	UN582
			74	60	
			75	61	
			79	65	

STD

OKEFORD 4U SIGNALING PROTOCOL CONVERTER CABLE EQL STAMPING TABLE CONNECTOR -- 1 STAMPING [1130]

CABLE DESIGNATION	CABINET EQL	CP SLOT EQL	CONN ON CIRCUIT PACK
JV250	( )SEE TBL NOTE 1	032	B (TOP)
JV250			A (BOT)
JV250		039	B (TOP)
JV250			A (BOT)
JV250		045	B (TOP)
JV250			A (BOT)
JV250		052	B (TOP)
JV250			A (BOT)
JV250		058	B (TOP)
JV250			A (BOT)
JV250		065	B (TOP)
JV250			A (BOT)
JV250		071	B (TOP)
JV250			A (BOT)
JV250		078	B (TOP)
JV250			A (BOT)

NOTE 1: THE CABINET EQL APPLIES TO THE FOLLOWING CABINET POSITIONS FOR THE OKEFORD 4U SIGNALING PROTOCOL CONVERTER UNIT IN MISC CABINET:
10, 17, 25, 32, 40, 47, 55, 62

STE

OKEFORD 4U SIGNALING PROTOCOL CONVERTER CABLE EQL STAMPING TABLE CONNECTOR -- 1 STAMPING [1140]

CABLE DESIGNATION	CABINET EQL(CP SLOT)	CONN ON CIRCUIT PACK
JV251	( )10-097	J1
JV251	( )17-097	J1
JV251	( )25-097	J1
JV251	( )32-097	J1
JV251	( )40-097	J1
JV251	( )47-097	J1
JV251	( )55-097	J1
JV251	( )62-097	J1

STF

CRONUS SIGNALPATH 230 SIGNALING PROTOCOL CONVERTER CABLE EQL STAMPING TABLE CONNECTOR -- 1 STAMPING [1150]

CABLE DESIGNATION	CABINET EQL	CP SLOT EQL	CONN ON CIRCUIT PACK	SEE TBL NOTE
JV78	( )SEE TBL NOTE 1	04	TRK 1-8 (XMT)	2
JV78A			TRK 1-8 (RCV)	
JV78		05	TRK 1-8 (XMT)	
JV78A			TRK 1-8 (RCV)	
JV78		06	TRK 1-8 (XMT)	
JV78A			TRK 1-8 (RCV)	
JV78		07	TRK 1-8 (XMT)	
JV78A			TRK 1-8 (RCV)	
JV78		08	TRK 1-8 (XMT)	
JV78A			TRK 1-8 (RCV)	
JV78		09	TRK 1-8 (XMT)	
JV78A			TRK 1-8 (RCV)	
JV78		10	TRK 1-8 (XMT)	
JV78A			TRK 1-8 (RCV)	
JV78		11	TRK 1-8 (XMT)	
JV78A			TRK 1-8 (RCV)	
JV78		12	TRK 1-8 (XMT)	
JV78A			TRK 1-8 (RCV)	
JV78		13	TRK 1-8 (XMT)	
JV78A			TRK 1-8 (RCV)	
JV78		14	TRK 1-8 (XMT)	
JV78A			TRK 1-8 (RCV)	
JV78		15	TRK 1-8 (XMT)	
JV78A			TRK 1-8 (RCV)	
JV78		16	TRK 1-8 (XMT)	
JV78A			TRK 1-8 (RCV)	

NOTE 1: THE CABINET EQL APPLIES TO THE FOLLOWING CABINET POSITIONS FOR THE CRONUS SIGNALPATH 230 SIGNALING PROTOCOL CONVERTER UNIT IN MISC CABINET: 24 & 44

NOTE 2: EACH CKT PACK SLOT REQUIRES (8) JV78 CABLES FOR TRANSMIT AND (8) JV78A CABLES FOR RECEIVE.

COPYRIGHT @ 2001 LUCENT TECHNOLOGIES
ALL RIGHTS RESERVED

TABLE A1

TABLE OF CONNECTORIZED T/R CABLES CONNECTED TO DF 89 OR 112 BLKS

EQPT	ED5D500 -21 GRP	ASSY DOCUM	GROUP JRXXX	CABLE	89 BLK	112 BLK	CONNECTOR	PATTERN *	NOTE
LU2 T/R CABLES	180A-182A	ED5D503-35	261A-264A	128 PRS	89E1B-128	112E1B-128	---		
	180-182	ED5D503-30	261-264		89G1B-128	112G1B-128	711		
	180E-182E	ED5D503-30	261E-264E		89G1B-128B		TRW	T=1,R=33	
	180D-182D	ED5D503-30	261D-264D		TELZON		TRW	T=33,R=1	
	211A-213A	ED5D503-32	121A-128A	64 PRS	89E1B-128	112E1B-128	---		
	211A-223A	ED5D503-32	141A-148A	64 PRS	89E1B-128	112E1B-128	---		
	201-203	ED5D503-32	201-204	128 PRS	89M1AA11-128		711		
	201B-203B	ED5D503-32	201B-204B		89M1CA21-128	112J1B-128	TRW	T=33,R=1	
	211B-213B	ED5D503-32	121B-128B	64 PRS	89M1CA21-128	112J1B-128	TRW	T=33,R=1	
LU3 T/R CABLES	183A-186A	ED5D503-35	281A-285A	128 PRS	89E1B-128	112E1B-128	---	---	
	183-186	ED5D503-30	281-285		89G1B-128	112G1B-128	711	---	
	183E-186E	ED5D503-30	281E-285E		89G1B-128		TRW	T=1,R=33	
	183D-186D	ED5D503-30	281D-285D		TELZON		TRW	T=33,R=1	
	214A-217A	ED5D503-32	131A-140A	64 PRS	89E1B-128	112E1B-128	---	---	
	204-207	ED5D503-32	291-295	128 PRS	89M1AA11-128		711	---	
	204B-207B	ED5D503-32	291B-295B		89M1CA21-128	112J1B-128	TRW	T=33,R=1	
	214B-217B	ED5D503-32	131B-140B	64 PRS	89M1CA21-128	112J1B-128	TRW	T=33,R=1	
LU3 T/R CABLES	900	ED5D503-32	900,901	128 PRS	(SWC) ONLY	---			EVEN/ODD SWITCH TERMG
	901	ED5D503-32	902,903	64 PRS	(SWC) ONLY	---			ON DIF DF'S
TU T,R,T1 R1,E, SG,M, SB	120A	ED5D503-35	101A,102A	128 PRS	89E1A-128	112E1A-128	---	---	
	120	ED5D503-30	101,102		89G1A-128	112G1A-128	711	---	
	121	ED5D503-32	103,104		89M1GE11-128		711	---	
	121B	ED5D503-32	103B,104B		89M1HE21-128		TRW	T=33,R=1	
RES PNL T,R	23A	ED5D505-35	11A		89E1C-128	112E1C-128	---	---	
	23	ED5D505-30	11		89G1C-128	112G1C-128	711		
	22	ED5D505-30	10		89M1AE11-128		711	---	
	22B	ED5D505-30	10B		89M1CE21-128		TRW	T-33,R=1	
MMSU SC,SD	104A	ED5D503-30	53A	32 PRS (1CONN)	89M1AE11-128		711		2 CABLES OF EACH PER BLOCK
	105A	ED5D503-30	54A				711		
	104B	ED5D503-30	53B		89M1CE21-128		TRW	T=33,R=1	2 CABLES OF EACH PER BLOCK
	105B	ED5D503-30	54B				TRW	T=33,R=1	

* T=33,R=1 (BELLCORE/FCC PATTERN)
* T=1,R=33 (AT&T PATTERN USED ONLY ON 'E' GROUPS)

TABLE A2

ODL40 FIBER OPTIC CABLE GROUPS (50 MICRONS)

ORDERING DOC	GRP	ASSY DOC ED5D518-30	CA DESIG	FROM	TO CONN	TO	TO CONN	PORT ASGN TBL	REMK
ED5D500-11	4	G2	JL5-8	TSIU2	982CF 982CG	CM1/TMS	982CF 982CG	CA	
ED5D500-11	4A	G2	JL5-8	MCTU	982CF 982CG	CM1/TMS	982CF 982CG	CA	
ED5D500-21	4B	G2	JL5-8	MCTU2	982CF 982CG	CM1/TMS	982CF 982CG	CA	
ED5D500-11	5	G3,4	JL9-16	TSIU2	982CF 982CG	CM2	1A TRCVR	AA,AB	
ED5D500-21	5A	G3,4	JL9-16	MCTU	982CF 982CG	CM2	1A TRCVR	AA,AB	
ED5D500-21	5B	G3,4	JL9-16	MCTU2	982CF 982CG	CM2	1A TRCVR	AA,AB	
ED5D500-21	19C	G2	JL3A,4A	TMS	982CF 982CG	MSG	982CF 982CG	---	
ED5D500-21	6	G5,6	JL17-24	MCTU	982TA 982WY	LGX		AD2	TRM (REM)
ED5D500-21	6B	G5,6	JL17-24	MCTU2	982TA 982WY	LGX		AD2	TRM (REM)
ED5D500-21	7	G5,6	JL25-32	CM1/TMS	982TA 982WY	LGX		ED5D500-11 CA1	TRM (HOST)
*ED5D500-21	7	G3,4	JL25-32	CM2	982TH	LGX (*OR LSM)	(982CF 982CG)	AE,AE1,AE2	TRM (HOST) NOTE 96
ED5D500-11	8 9	G2	JL33-36 JL37-40	TRCU/TRCU2	982CF 982CG	CM1/TMS	982CF 982CG	CA2	ORM (HOST)
ED5D500-21	8A 9A	G3,4 G3,4	JL41-48 JL49-56	TRCU/TRCU2	982CF 982CG	CM2	1A TRCVR	AC,AD,AD1	ORM (HOST)

ODL50 FIBER OPTIC CABLE GROUPS (62.5 MICRONS)

ORDERING DOC	GRP	ASSY DOC ED5D518-30	CA DESIG	FROM	TO CONN	TO	TO CONN	PORT ASGN TBL	REMK
ED5D500-21	4	G17,18	JL101-108	MCTU	982TR 982TS	CM1/TMS	982TR 982TS	E1	
ED5D500-21	4A	G17,18	JL101-108	MCTU2	982TR 982TS	CM1/TMS	982TR 982TS	E1	
ED5D500-21	4C	G17,18	JL101-104	TMS	982TR 982TS	MSG	982TR 982TS	---	
ED5D500-21	10	G17,18	JL101-108	MCTU	982TR 982TS	CM2	982TT	F1,F2,F3	
ED5D500-21	10A	G17,18	JL101-108	MCTU2	982TR 982TS	CM2	982TT	F1,F2,F3	
ED5D500-21	8B	G17,18	JL101-108	TRCU2	982TR	CM1/TMS	982TR 982TS	E3	
ED5D500-21	8C	G17,18	JL101-108	TRCU2	982TR	CM2	982TT	H4,H5,H6	
ED5D500-21	8D	G17,18	JL101-108	TRCU	982TR	CM1/TMS	982TR 982TS	E2	
ED5D500-21	8E	G17,18	JL101-108	TRCU	982TR	CM2	982TT	H1,H2,H3	

*** CONTINUED ***

COPYRIGHT @ 2001 LUCENT TECHNOLOGIES
ALL RIGHTS RESERVED

BT13

INTERCABINET CABLING
FOR
5ESS * SWITCH
*LUCENT TRADEMARK

DWG SIZE C2 | ISSUE 117

LUCENT TECHNOLOGIES INC | ED5D500-21 | SHEET D23 OF 292

PRINTED IN U.S.A.

** CONTINUED **
TABLE A2

ODL40 FIBER OPTIC CABLE GROUPS (50 MICRONS)								
ORDERING DOC	GRP	ASSY DOC ED5D518-30	CA DESIG	FROM CONN	TO CONN	PORT ASGN TBL	REMK

* NOTE
WHEN LSM IS ENGINEERED TO SHARE CKT ON CM2 (DUAL FABRIC) WITH TRM, GROUP 7 HAS TO BE ORDERED. SEE ENG NOTE 96.
** TRM IS NOT PROVIDED FOR A ODL50 FO CABLES YET.

TABLE AA

SINGLE FABRIC								
CABLE DESIG	JL9	JL11	JL13	JL15	JL10	JL12	JL14	JL16
NCT	OA		OB		1A		1B	
LINKS	XMTR	REC	XMTR	REC	XMTR	REC	XMTR	REC
SM () SMC 1 MCTU G5A	136- 084- 332	136- 084- 345	136- 084- 313	136- 084- 300	136- 098- 332	136- 098- 345	136- 098- 313	136- 098- 300
SM () SMC 1 MCTU2 G5B	119- 156- 332	119- 156- 345	119- 156- 313	119- 156- 300	128- 156- 332	128- 156- 345	128- 156- 313	128- 156- 300

CM2 PORTS								
SM NBR	CM2 '0' SIDE REC 1 A	XMT 1 C	REC 2 B	XMT 2 D	CM2 '1' SIDE REC 1 A	XMT 1 C	REC 2 B	XMT 2 D
SM1	536-088-145				636-088-145			
SM2	536-080-145				636-080-145			
SM3	536-080-113				636-080-113			
SM4	536-072-145				636-072-145			
SM5	536-072-113				636-072-113			
SM6	536-064-145				636-064-145			
SM7	536-064-113				636-064-113			
SM8	536-056-145				636-056-145			
SM9	536-056-113				636-056-113			
SM10	536-048-145				636-048-145			
SM11	536-048-113				636-048-113			
SM12	536-040-145				636-040-145			
SM13	536-040-113				636-040-113			
SM14	536-032-145				636-032-145			
SM15	536-032-113				636-032-113			
SM16	519-088-145				619-088-145			
SM17	519-080-145				619-080-145			
SM18	519-080-113				619-080-113			
SM19	519-072-145				619-072-145			

*** CONTINUED ***

** CONTINUED **
TABLE AA

SINGLE FABRIC								
CABLE DESIG	JL9	JL11	JL13	JL15	JL10	JL12	JL14	JL16
NCT	OA		OB		1A		1B	
LINKS	XMTR	REC	XMTR	REC	XMTR	REC	XMTR	REC
SM () SMC 1 MCTU G5A	136- 084- 332	136- 084- 345	136- 084- 313	136- 084- 300	136- 098- 332	136- 098- 345	136- 098- 313	136- 098- 300
SM () SMC 1 MCTU2 G5B	119- 156- 332	119- 156- 345	119- 156- 313	119- 156- 300	128- 156- 332	128- 156- 345	128- 156- 313	128- 156- 300

CM2 PORTS								
SM NBR	CM2 '0' SIDE REC 1 A	XMT 1 C	REC 2 B	XMT 2 D	CM2 '1' SIDE REC 1 A	XMT 1 C	REC 2 B	XMT 2 D
SM20	519-072-113				619-072-113			
SM21	519-064-145				619-064-145			
SM22	519-064-113				619-064-113			
SM23	519-056-145				619-056-145			
SM24	519-056-113				619-056-113			
SM25	519-048-145				619-048-145			
SM26	519-048-113				619-048-113			
SM27	519-040-145				619-040-145			
SM28	519-040-113				619-040-113			
SM29	519-032-145				619-032-145			
SM30	519-032-113				619-032-113			
SM31	436-088-145				736-088-145			
SM32	436-088-113				736-088-113			
SM33	436-080-145				736-080-145			
SM34	436-080-113				736-080-113			
SM35	436-072-145				736-072-145			
SM36	436-072-113				736-072-113			
SM37	436-064-145				736-064-145			
SM38	436-064-113				736-064-113			
SM39	436-056-145				736-056-145			
SM40	436-056-113				736-056-113			
SM41	436-048-145				736-048-145			
SM42	436-048-113				736-048-113			
SM43	436-040-145				736-040-145			
SM44	436-040-113				736-040-113			
SM45	436-032-145				736-032-145			

*** CONTINUED ***

** CONTINUED **
TABLE AA

SINGLE FABRIC								
CABLE DESIG	JL9	JL11	JL13	JL15	JL10	JL12	JL14	JL16
NCT	OA		OB		1A		1B	
LINKS	XMTR	REC	XMTR	REC	XMTR	REC	XMTR	REC
SM () SMC 1 MCTU G5A	136- 084- 332	136- 084- 345	136- 084- 313	136- 084- 300	136- 098- 332	136- 098- 345	136- 098- 313	136- 098- 300
SM () SMC 1 MCTU2 G5B	119- 156- 332	119- 156- 345	119- 156- 313	119- 156- 300	128- 156- 332	128- 156- 345	128- 156- 313	128- 156- 300

CM2 PORTS								
SM NBR	CM2 '0' SIDE REC 1 A	XMT 1 C	REC 2 B	XMT 2 D	CM2 '1' SIDE REC 1 A	XMT 1 C	REC 2 B	XMT 2 D
SM46	436-032-113				736-032-113			
SM47	419-088-145				719-088-145			
SM48	419-088-113				719-088-113			
SM49	419-080-145				719-080-145			
SM50	419-080-113				719-080-113			
SM51	419-072-145				719-072-145			
SM52	419-072-113				719-072-113			
SM53	419-064-145				719-064-145			
SM54	419-064-113				719-064-113			
SM55	419-056-145				719-056-145			
SM56	419-056-113				719-056-113			
SM57	419-048-145				719-048-145			
SM58	419-048-113				719-048-113			
SM59	419-040-145				719-040-145			
SM60	419-040-113				719-040-113			
SM61	419-032-145				719-032-145			
SM62	419-032-113				719-032-113			
SM63	336-088-145				836-088-145			
SM64	336-088-113				836-088-113			
SM65	336-080-145				836-080-145			
SM66	336-080-113				836-080-113			
SM67	336-072-145				836-072-145			
SM68	336-072-113				836-072-113			
SM69	336-064-145				836-064-145			
SM70	336-064-113				836-064-113			
SM71	336-056-145				836-056-145			
SM72	336-056-113				836-056-113			

*** CONTINUED ***

COPYRIGHT @ 2001 LUCENT TECHNOLOGIES
ALL RIGHTS RESERVED

BT13

INTERCABINET CABLING
FOR
5ESS * SWITCH
*LUCENT TRADEMARK

DWG SIZE C2 | ISSUE 117

** CONTINUED **
TABLE AA

SINGLE FABRIC

CABLE DESIG	JL9		JL11		JL13		JL15		JL10		JL12		JL14		JL16	
NCT	OA				OB				1A				1B			
LINKS	XMTR		REC		XMTR		REC		XMTR		REC		XMTR		REC	
SM () SMC 1 MCTU G5A	136- 084- 332		136- 084- 345		136- 084- 313		136- 084- 300		136- 098- 332		136- 098- 345		136- 098- 313		136- 098- 300	
SM () SMC 1 MCTU2 G5B	119- 156- 332		119- 156- 345		119- 156- 313		119- 156- 300		128- 156- 332		128- 156- 345		128- 156- 313		128- 156- 300	

CM2 PORTS

SM NBR	CM2 '0' SIDE				CM2 '1' SIDE			
	REC 1 A	XMT 1 C	REC 2 B	XMT 2 D	REC 1 A	XMT 1 C	REC 2 B	XMT 2 D
SM73	336-048-145				836-048-145			
SM74	336-048-113				836-048-113			
SM75	336-040-145				836-040-145			
SM76	336-040-113				836-040-113			
SM77	336-032-145				836-032-145			
SM78	336-032-113				836-032-113			
SM79	319-088-145				819-088-145			
SM80	319-088-113				819-088-113			
SM81	319-080-145				819-080-145			
SM82	319-080-113				819-080-113			
SM83	319-072-145				819-072-145			
SM84	319-072-113				819-072-113			
SM85	319-064-145				819-064-145			
SM86	319-064-113				819-064-113			
SM87	319-056-145				819-056-145			
SM88	319-056-113				819-056-113			
SM89	319-048-145				819-048-145			
SM90	319-048-113				819-048-113			
SM91	319-040-145				819-040-145			
SM92	319-040-113				819-040-113			
SM93	319-032-145				819-032-145			
SM94	319-032-113				819-032-113			

TABLE AB

DUAL FABRIC (ODD SM)

CABLE DESIG	JL9		JL11		JL13		JL15		JL10		JL12		JL14		JL16	
NCT	OA				OB				1A				1B			
LINKS	XMTR		REC		XMTR		REC		XMTR		REC		XMTR		REC	
SM () SMC 1 MCTU G5A	136- 084- 332		136- 084- 345		136- 084- 313		136- 084- 300		136- 098- 332		136- 098- 345		136- 098- 313		136- 098- 300	
SM () SMC 1 MCTU2 G5B	119- 156- 332		119- 156- 345		119- 156- 313		119- 156- 300		128- 156- 332		128- 156- 345		128- 156- 313		128- 156- 300	

CM2 PORTS

ODD SM NBR	CM2 '0' SIDE				CM2 '1' SIDE			
	REC 1 A	XMT 1 C	REC 1 A	XMT 1 C	REC 1 A	XMT 1 C	REC 1 A	XMT 1 C
SM1	536-088-145		519-088-145		636-088-145		619-088-145	
SM3	536-080-145		519-080-145		636-080-145		619-080-145	
SM5	536-080-113		519-080-113		636-080-113		619-080-113	
SM7	536-072-145		519-072-145		636-072-145		619-072-145	
SM9	536-072-113		519-072-113		636-072-113		619-072-113	
SM11	536-064-145		519-064-145		636-064-145		619-064-145	
SM13	536-064-113		519-064-113		636-064-113		619-064-113	
SM15	536-056-145		519-056-145		636-056-145		619-056-145	
SM17	536-056-113		519-056-113		636-056-113		619-056-113	
SM19	536-048-145		519-048-145		636-048-145		619-048-145	
SM21	536-048-113		519-048-113		636-048-113		619-048-113	
SM23	536-040-145		519-040-145		636-040-145		619-040-145	
SM25	536-040-113		519-040-113		636-040-113		619-040-113	
SM27	536-032-145		519-032-145		636-032-145		619-032-145	
SM29	536-032-113		519-032-113		636-032-113		619-032-113	
SM31	436-088-145		419-088-145		736-088-145		719-088-145	
SM33	436-088-113		419-088-113		736-088-113		719-088-113	
SM35	436-080-145		419-080-145		736-080-145		719-080-145	
SM37	436-080-113		419-080-113		736-080-113		719-080-113	
SM39	436-072-145		419-072-145		736-072-145		719-072-145	
SM41	436-072-113		419-072-113		736-072-113		719-072-113	
SM43	436-064-145		419-064-145		736-064-145		719-064-145	
SM45	436-064-113		419-064-113		736-064-113		719-064-113	
SM47	436-056-145		419-056-145		736-056-145		719-056-145	
SM49	436-056-113		419-056-113		736-056-113		719-056-113	
SM51	436-048-145		419-048-145		736-048-145		719-048-145	

*** CONTINUED ***

** CONTINUED **
TABLE AB

DUAL FABRIC (ODD SM)

CABLE DESIG	JL9		JL11		JL13		JL15		JL10		JL12		JL14		JL16	
NCT	OA				OB				1A				1B			
LINKS	XMTR		REC		XMTR		REC		XMTR		REC		XMTR		REC	
SM () SMC 1 MCTU G5A	136- 084- 332		136- 084- 345		136- 084- 313		136- 084- 300		136- 098- 332		136- 098- 345		136- 098- 313		136- 098- 300	
SM () SMC 1 MCTU2 G5B	119- 156- 332		119- 156- 345		119- 156- 313		119- 156- 300		128- 156- 332		128- 156- 345		128- 156- 313		128- 156- 300	

CM2 PORTS

ODD SM NBR	CM2 '0' SIDE				CM2 '1' SIDE			
	REC 1 A	XMT 1 C	REC 1 A	XMT 1 C	REC 1 A	XMT 1 C	REC 1 A	XMT 1 C
SM53	436-048-113		419-048-113		736-048-113		719-048-113	
SM55	436-040-145		419-040-145		736-040-145		719-040-145	
SM57	436-040-113		419-040-113		736-040-113		719-040-113	
SM59	436-032-145		419-032-145		736-032-145		719-032-145	
SM61	436-032-113		419-032-113		736-032-113		719-032-113	
SM63	336-088-145		319-088-145		836-088-145		819-088-145	
SM65	336-088-113		319-088-113		836-088-113		819-088-113	
SM67	336-080-145		319-080-145		836-080-145		819-080-145	
SM69	336-080-113		319-080-113		836-080-113		819-080-113	
SM71	336-072-145		319-072-145		836-072-145		819-072-145	
SM73	336-072-113		319-072-113		836-072-113		819-072-113	
SM75	336-064-145		319-064-145		836-064-145		819-064-145	
SM77	336-064-113		319-064-113		836-064-113		819-064-113	
SM79	336-056-145		319-056-145		836-056-145		819-056-145	
SM81	336-056-113		319-056-113		836-056-113		819-056-113	
SM83	336-048-145		319-048-145		836-048-145		819-048-145	
SM85	336-048-113		319-048-113		836-048-113		819-048-113	
SM87	336-040-145		319-040-145		836-040-145		819-040-145	
SM89	336-040-113		319-040-113		836-040-113		819-040-113	
SM91	336-032-145		319-032-145		836-032-145		819-032-145	
SM93	336-032-113		319-032-113		836-032-113		819-032-113	
SM95	236-088-145		219-088-145		936-088-145		919-088-145	
SM97	236-088-113		219-088-113		936-088-113		919-088-113	
SM99	236-080-145		219-080-145		936-080-145		919-080-145	
SM101	236-080-113		219-080-113		936-080-113		919-080-113	
SM103	236-072-145		219-072-145		936-072-145		919-072-145	
SM105	236-072-113		219-072-113		936-072-113		919-072-113	

*** CONTINUED ***

** CONTINUED **
TABLE AB

DUAL FABRIC (ODD SM)

CABLE DESIG	JL9		JL11		JL13		JL15		JL10		JL12		JL14		JL16	
NCT	OA				OB				1A				1B			
LINKS	XMTR		REC		XMTR		REC		XMTR		REC		XMTR		REC	
SM () SMC 1 MCTU G5A	136- 084- 332		136- 084- 345		136- 084- 313		136- 084- 300		136- 098- 332		136- 098- 345		136- 098- 313		136- 098- 300	
SM () SMC 1 MCTU2 G5B	119- 156- 332		119- 156- 345		119- 156- 313		119- 156- 300		128- 156- 332		128- 156- 345		128- 156- 313		128- 156- 300	

CM2 PORTS

ODD SM NBR	CM2 '0' SIDE				CM2 '1' SIDE			
	REC 1 A	XMT 1 C	REC 1 A	XMT 1 C	REC 1 A	XMT 1 C	REC 1 A	XMT 1 C
SM107	236-064-145		219-064-145		936-064-145		919-064-145	
SM109	236-064-113		219-064-113		936-064-113		919-064-113	
SM111	236-056-145		219-056-145		936-056-145		919-056-145	
SM113	236-056-113		219-056-113		936-056-113		919-056-113	
SM115	236-048-145		219-048-145		936-048-145		919-488-143	
SM117	236-048-113		219-048-113		936-048-113		919-048-113	
SM119	236-040-145		219-040-145		936-040-145		919-040-145	
SM121	236-040-113		219-040-113		936-040-113		919-040-113	
SM123	236-032-145		219-032-145		936-032-145		919-032-145	
SM125	236-032-113		219-032-113		936-032-113		919-032-113	
SM127	136-088-145		119-088-145		1036-088-145		1019-088-145	
SM129	136-088-113		119-088-113		1036-088-113		1019-088-113	
SM131	136-080-145		119-080-145		1036-080-145		1019-080-145	
SM133	136-080-113		119-080-113		1036-080-113		1019-080-113	
SM135	136-072-145		119-072-145		1036-072-145		1019-072-145	
SM137	136-072-113		119-072-113		1036-072-113		1019-072-113	
SM139	136-064-145		119-064-145		1036-064-145		1019-064-145	
SM141	136-064-113		119-064-113		1036-064-113		1036-064-113	
SM143	136-056-145		119-056-145		1036-056-145		1019-056-145	
SM145	136-056-113		119-056-113		1036-056-113		1019-056-113	
SM147	136-048-145		119-048-145		1036-048-145		1019-048-145	
SM149	136-048-113		119-048-113		1036-048-113		1019-048-113	
SM151	136-040-145		119-040-145		1036-040-145		1019-040-145	
SM153	136-040-113		119-040-113		1036-040-113		1019-040-113	
SM155	136-032-145		119-032-145		1036-032-145		1019-324-145	
SM157	136-032-113		119-032-113		1036-032-113		1019-032-113	

*** CONTINUED ***

COPYRIGHT @ 2001 LUCENT TECHNOLOGIES
ALL RIGHTS RESERVED

BT13

INTERCABINET CABLING
FOR
5ESS * SWITCH
*LUCENT TRADEMARK

DWG SIZE C2 | ISSUE 117

PRINTED IN U.S.A.

** CONTINUED **

TABLE AB

CABLE DESIG	JL9	JL11	JL13	JL15	JL10	JL12	JL14	JL16
NCT	OA		OB		1A		1B	
LINKS	XMTR	REC	XMTR	REC	XMTR	REC	XMTR	REC
SM () SMC 1 MCTU G5A	136- 084- 332	136- 084- 345	136- 084- 313	136- 084- 300	136- 098- 332	136- 098- 345	136- 098- 313	136- 098- 300
SM () SMC 1 MCTU2 G5B	119- 156- 332	119- 156- 345	119- 156- 313	119- 156- 300	128- 156- 332	128- 156- 345	128- 156- 313	128- 156- 300

CM2 PORTS

ODD SM NBR	CM2 '0' SIDE		CM2 '1' SIDE	
	REC 1 A	XMT 1 C	REC 1 A	XMT 1 C
SM159	036-088-145	019-088-145	1136-088-145	1119-088-145
SM161	036-088-113	019-088-113	1136-088-113	1119-088-113
SM163	036-080-145	019-080-145	1136-080-145	1119-080-145
SM165	036-080-113	019-080-113	1136-080-113	1119-080-113
SM167	036-072-145	019-072-145	1136-072-145	1119-072-145
SM169	036-072-113	019-072-113	1136-072-113	1119-072-113
SM171	036-064-145	019-064-145	1136-064-145	1119-064-145
SM173	036-064-113	019-064-113	1136-064-113	1119-064-113
SM175	036-056-145	019-056-145	1136-056-145	1119-056-145
SM177	036-056-113	019-056-113	1136-056-113	1119-056-113
SM179	036-048-145	019-048-145	1136-048-145	1119-048-145
SM181	036-048-113	019-048-113	1136-048-113	1119-048-113
SM183	036-040-145	019-040-145	1136-040-145	1119-040-145
SM185	036-040-113	019-040-113	1136-040-113	1119-040-113
SM187	036-032-145	019-032-145	1136-032-145	1119-032-145
SM189	036-032-113	019-032-113	1136-032-113	1119-032-113

TABLE AB-1

CABLE DESIG	JL9	JL11	JL13	JL15	JL10	JL12	JL14	JL16
NCT	OA		OB		1A		1B	
LINKS	XMTR	REC	XMTR	REC	XMTR	REC	XMTR	REC
SM () SMC 1 MCTU G5A	136- 084- 332	136- 084- 345	136- 084- 313	136- 084- 300	136- 098- 332	136- 098- 345	136- 098- 313	136- 098- 300
SM () SMC 1 MCTU2 G5B	119- 156- 332	119- 156- 345	119- 156- 313	119- 156- 300	128- 156- 332	128- 156- 345	128- 156- 313	128- 156- 300

CM2 PORTS

EVEN SM NBR	CM2 '0' SIDE		CM2 '1' SIDE	
	REC 2 B	XMT 2 D	REC 2 B	XMT 2 D
SM2	536-088-145	519-088-145	636-088-145	619-088-145
SM4	536-080-145	519-080-145	636-080-145	619-080-145
SM6	536-080-113	519-080-113	636-080-113	619-080-113
SM8	536-072-145	519-072-145	636-072-145	619-072-145
SM10	536-072-113	519-072-113	636-072-113	619-072-113
SM12	536-064-145	519-064-145	636-064-145	619-064-145
SM14	536-064-113	519-064-113	636-064-113	619-064-113
SM16	536-056-145	519-056-145	636-056-145	619-056-145
SM18	536-056-113	519-056-113	636-056-113	619-056-113
SM20	536-048-145	519-048-145	636-048-145	619-048-145
SM22	536-048-113	519-048-113	636-048-113	619-048-113
SM24	536-040-145	519-040-145	636-040-145	619-040-145
SM26	536-040-113	519-040-113	636-040-113	619-040-113
SM28	536-032-145	519-032-145	636-032-145	619-032-145
SM30	536-032-113	519-032-113	636-032-113	619-032-113
SM32	436-088-145	419-088-145	736-088-145	719-088-145
SM34	436-088-113	419-088-113	736-088-113	719-088-113
SM36	436-080-145	419-080-145	736-080-145	719-080-145
SM38	436-080-113	419-080-113	736-080-113	719-080-113
SM40	436-072-145	419-072-145	736-072-145	719-072-145
SM42	436-072-113	419-072-113	736-072-113	719-072-113
SM44	436-064-145	419-064-145	736-064-145	719-064-145
SM46	436-064-113	419-064-113	736-064-113	719-064-113
SM48	436-056-145	419-056-145	736-056-145	719-056-145
SM50	436-056-113	419-056-113	736-056-113	719-056-113
SM52	436-048-145	419-048-145	736-048-145	719-048-145

*** CONTINUED ***

** CONTINUED **

TABLE AB-1

CABLE DESIG	JL9	JL11	JL13	JL15	JL10	JL12	JL14	JL16
NCT	OA		OB		1A		1B	
LINKS	XMTR	REC	XMTR	REC	XMTR	REC	XMTR	REC
SM () SMC 1 MCTU G5A	136- 084- 332	136- 084- 345	136- 084- 313	136- 084- 300	136- 098- 332	136- 098- 345	136- 098- 313	136- 098- 300
SM () SMC 1 MCTU2 G5B	119- 156- 332	119- 156- 345	119- 156- 313	119- 156- 300	128- 156- 332	128- 156- 345	128- 156- 313	128- 156- 300

CM2 PORTS

EVEN SM NBR	CM2 '0' SIDE		CM2 '1' SIDE	
	REC 2 B	XMT 2 D	REC 2 B	XMT 2 D
SM54	436-048-113	419-048-113	736-048-113	719-048-113
SM56	436-040-145	419-040-145	736-040-145	719-040-145
SM58	436-040-113	419-040-113	736-040-113	719-040-113
SM60	436-032-145	419-032-145	736-032-145	719-032-145
SM62	436-032-113	419-032-113	736-032-113	719-032-113
SM64	336-088-145	319-088-145	836-088-145	819-088-145
SM66	336-088-113	319-088-113	836-088-113	819-088-113
SM68	336-080-145	319-080-145	836-080-145	819-080-145
SM70	336-080-113	319-080-113	836-080-113	819-080-113
SM72	336-072-145	319-072-145	836-072-145	819-072-145
SM74	336-072-113	319-072-113	836-072-113	819-072-113
SM76	336-064-145	319-064-145	836-064-145	819-064-145
SM78	336-064-113	319-064-113	836-064-113	819-064-113
SM80	336-056-145	319-056-145	836-056-145	819-056-145
SM82	336-056-113	319-056-113	836-056-113	819-056-113
SM84	336-048-145	319-048-145	836-048-145	819-048-145
SM86	336-048-113	319-048-113	836-048-113	819-048-113
SM88	336-040-145	319-040-145	836-040-145	819-040-145
SM90	336-040-113	319-040-113	836-040-113	819-040-113
SM92	336-032-145	319-032-145	836-032-145	819-032-145
SM94	336-032-113	319-032-113	836-032-113	819-032-113
SM96	236-088-145	219-088-145	936-088-145	919-088-145
SM98	236-088-113	219-088-113	936-088-113	919-088-113
SM100	236-080-145	219-080-145	936-080-145	919-080-145
SM102	236-080-113	219-080-113	936-080-113	919-080-113
SM104	236-072-145	219-072-145	936-072-145	919-072-145
SM106	236-072-113	219-072-113	936-072-113	919-072-113

*** CONTINUED ***

** CONTINUED **

TABLE AB-1

CABLE DESIG	JL9	JL11	JL13	JL15	JL10	JL12	JL14	JL16
NCT	OA		OB		1A		1B	
LINKS	XMTR	REC	XMTR	REC	XMTR	REC	XMTR	REC
SM () SMC 1 MCTU G5A	136- 084- 332	136- 084- 345	136- 084- 313	136- 084- 300	136- 098- 332	136- 098- 345	136- 098- 313	136- 098- 300
SM () SMC 1 MCTU2 G5B	119- 156- 332	119- 156- 345	119- 156- 313	119- 156- 300	128- 156- 332	128- 156- 345	128- 156- 313	128- 156- 300

CM2 PORTS

EVEN SM NBR	CM2 '0' SIDE		CM2 '1' SIDE	
	REC 2 B	XMT 2 D	REC 2 B	XMT 2 D
SM108	236-064-145	219-064-145	936-064-145	919-064-145
SM110	236-064-113	219-064-113	936-064-113	919-064-113
SM112	236-056-145	219-056-145	936-056-145	919-056-145
SM114	236-056-113	219-056-113	936-056-113	919-056-113
SM116	236-048-145	219-048-145	936-048-145	919-048-145
SM118	236-048-113	219-048-113	936-048-113	919-048-113
SM120	236-040-145	219-040-145	936-040-145	919-040-145
SM122	226-040-113	219-040-113	936-040-113	919-040-113
SM124	236-032-145	219-032-145	936-032-145	919-032-145
SM126	236-032-113	219-032-113	936-032-113	919-032-113
SM128	136-088-145	119-088-145	1036-088-145	1019-088-145
SM130	136-088-113	119-088-113	1036-088-113	1019-088-113
SM132	136-080-145	119-080-145	1036-080-145	1019-088-145
SM134	136-080-113	119-080-113	1036-080-113	1019-088-113
SM136	136-072-145	119-072-145	1036-072-145	1019-072-145
SM138	136-072-113	119-072-113	1036-072-113	1019-072-113
SM140	136-064-145	119-064-145	1036-064-145	1019-064-145
SM142	136-064-113	119-064-113	1036-064-113	1019-064-113
SM144	136-056-145	119-056-145	1036-056-145	1019-056-145
SM146	136-056-113	119-056-113	1036-056-113	1019-056-113
SM148	136-048-145	119-048-145	1036-048-145	1019-048-145
SM150	136-048-113	119-048-113	1036-048-113	1019-048-113
SM152	136-040-145	119-040-145	1036-040-145	1019-048-145
SM154	136-040-113	119-040-113	1036-040-113	1019-040-113
SM156	136-032-145	119-032-145	1036-032-145	1019-032-145
SM158	136-032-113	119-032-113	1036-032-113	1019-032-113

*** CONTINUED ***

COPYRIGHT @ 2001 LUCENT TECHNOLOGIES
ALL RIGHTS RESERVED

BT13

INTERCABINET CABLING
FOR
5ESS * SWITCH
*LUCENT TRADEMARK

DWG SIZE C2 | ISSUE 117

LUCENT TECHNOLOGIES INC | ED5D500-21 | SHEET D26 OF 292

PRINTED IN U.S.A.

** CONTINUED **
TABLE AB-1

DUAL FABRIC (EVEN SM)								
CABLE DESIG	JL9	JL11	JL13	JL15	JL10	JL12	JL14	JL16
NCT	0A		0B		1A		1B	
LINKS	XMTR	REC	XMTR	REC	XMTR	REC	XMTR	REC
SM () SMC 1 MCTU G5A	136-084-332	136-084-345	136-084-313	136-084-300	136-098-332	136-098-345	136-098-313	136-098-300
SM () SMC 1 MCTU2 G5B	119-156-332	119-156-345	119-156-313	119-156-300	128-156-332	128-156-345	128-156-313	128-156-300

CM2 PORTS

EVEN SM NBR	CM2 '0' SIDE REC 2 B	CM2 '0' SIDE XMT 2 D	CM2 '1' SIDE REC 2 B	CM2 '1' SIDE XMT 2 D	CM2 '0' SIDE REC 2 B	CM2 '0' SIDE XMT 2 D	CM2 '1' SIDE REC 2 B	CM2 '1' SIDE XMT 2 D
SM160	036-088-145		019-088-145		1136-088-145		1119-088-145	
SM162	036-088-113		019-088-113		1136-088-113		1119-088-113	
SM164	036-080-145		019-080-145		1136-080-145		1119-080-145	
SM166	036-080-113		019-080-113		1136-080-113		1119-080-113	
SM168	036-072-145		019-072-145		1136-072-145		1119-072-145	
SM170	036-072-113		019-072-113		1136-072-113		1119-072-113	
SM172	036-064-145		019-064-145		1136-064-145		1119-064-145	
SM174	036-064-113		019-064-113		1136-064-113		1119-064-113	
SM176	036-056-145		019-056-145		1136-056-145		1119-056-145	
SM178	036-056-113		019-056-113		1136-056-145		1119-056-113	
SM180	036-048-145		019-048-145		1136-048-145		1119-048-145	
SM182	036-048-113		019-048-113		1136-048-113		1119-048-113	
SM184	036-040-145		019-040-145		1136-040-145		1119-040-145	
SM186	036-040-113		019-040-113		1136-040-113		1119-040-113	
SM188	036-032-145		019-032-145		1136-032-145		1119-032-145	
SM190	036-032-113		019-032-113		1136-032-113		1119-032-113	

TABLE AC

SINGLE FABRIC								
G8A	JL41	JL43	JL45	JL47	JL42	JL44	JL46	JL48
G9A	JL49	JL51	JL53	JL55	JL50	JL52	JL54	JL56
NCT	0A		0B		1A		1B	
LINKS	XMTR	REC	XMTR	REC	XMTR	REC	XMTR	REC
M() TRCU G8A	()-066-132	()-066-145	()-082-132	()-082-145	()-114-132	()-114-145	()-130-132	()-130-145
M() TRCU2 G8A	()-022-132	()-022-145	()-030-132	()-030-145	()-138-132	()-138-145	()-146-132	()-146-145
M() TRCU G9A	()-026-132	()-026-145	()-042-132	()-042-145	()-154-132	()-154-145	()-170-132	()-170-145
M() TRCU2 G9A	()-038-132	()-038-145	()-046-132	()-046-145	()-154-132	()-154-145	()-162-132	()-162-145

CM2 PORTS

M() TRCU G8A G9A	CM2 "0" SIDE REC 1 A	CM2 "0" SIDE XMT 1 C	CM2 "0" SIDE REC 2 B	CM2 "0" SIDE XMT 2 D	CM2 "1" SIDE REC 1 A	CM2 "1" SIDE XMT 1 C	CM2 "1" SIDE REC 2 B	CM2 "1" SIDE XMT 2 D
SM1	536-088-145				636-088-145			
SM2	536-080-145				636-080-145			
SM3	536-080-113				636-080-113			
SM4	536-072-145				636-072-145			
SM5	536-072-113				636-072-113			
SM6	536-064-145				636-064-145			
SM7	536-064-113				636-064-113			
SM8	536-056-145				636-056-145			
SM9	536-056-113				636-056-113			
SM10	536-048-145				636-048-145			
SM11	536-048-113				636-048-113			
SM12	536-040-145				636-040-145			
SM13	536-040-113				636-040-113			
SM14	536-032-145				636-032-145			
SM15	536-032-113				636-032-113			
SM16	519-088-145				619-088-145			
SM17	519-080-145				619-080-145			
SM18	519-080-113				619-080-113			
SM19	519-072-145				619-072-145			
SM20	519-072-113				619-072-113			
SM21	519-064-145				619-064-145			
SM22	519-064-113				619-064-113			
SM23	519-056-145				619-056-145			

*** CONTINUED ***

** CONTINUED **
TABLE AC

SINGLE FABRIC								
G8A	JL41	JL43	JL45	JL47	JL42	JL44	JL46	JL48
G9A	JL49	JL51	JL53	JL55	JL50	JL52	JL54	JL56
NCT	0A		0B		1A		1B	
LINKS	XMTR	REC	XMTR	REC	XMTR	REC	XMTR	REC
M() TRCU G8A	()-066-132	()-066-145	()-082-132	()-082-145	()-114-132	()-114-145	()-130-132	()-130-145
M() TRCU2 G8A	()-022-132	()-022-145	()-030-132	()-030-145	()-138-132	()-138-145	()-146-132	()-146-145
M() TRCU G9A	()-026-132	()-026-145	()-042-132	()-042-145	()-154-132	()-154-145	()-170-132	()-170-145
M() TRCU2 G9A	()-038-132	()-038-145	()-046-132	()-046-145	()-154-132	()-154-145	()-162-132	()-162-145

CM2 PORTS

M() TRCU G8A G9A	CM2 "0" SIDE REC 1 A	CM2 "0" SIDE XMT 1 C	CM2 "0" SIDE REC 2 B	CM2 "0" SIDE XMT 2 D	CM2 "1" SIDE REC 1 A	CM2 "1" SIDE XMT 1 C	CM2 "1" SIDE REC 2 B	CM2 "1" SIDE XMT 2 D
SM24	519-056-113				619-056-113			
SM25	519-048-145				619-048-145			
SM26	519-048-113				619-048-113			
SM27	519-040-145				619-040-145			
SM28	519-040-113				619-040-113			
SM29	519-032-145				619-032-145			
SM30	519-032-113				619-032-113			
SM31	436-088-145				736-088-145			
SM32	436-088-113				736-088-113			
SM33	436-080-145				736-080-145			
SM34	436-080-113				736-080-113			
SM35	436-072-145				736-072-145			
SM36	436-072-113				736-072-113			
SM37	436-064-145				736-064-145			
SM38	436-064-113				736-064-113			
SM39	436-056-145				736-056-145			
SM40	436-056-113				736-056-113			
SM41	436-048-145				736-048-145			
SM42	436-048-113				736-048-113			
SM43	436-040-145				736-040-145			
SM44	436-040-113				736-040-113			
SM45	436-032-145				736-032-145			
SM46	436-032-113				736-032-113			

*** CONTINUED ***

** CONTINUED **
TABLE AC

SINGLE FABRIC								
G8A	JL41	JL43	JL45	JL47	JL42	JL44	JL46	JL48
G9A	JL49	JL51	JL53	JL55	JL50	JL52	JL54	JL56
NCT	0A		0B		1A		1B	
LINKS	XMTR	REC	XMTR	REC	XMTR	REC	XMTR	REC
M() TRCU G8A	()-066-132	()-066-145	()-082-132	()-082-145	()-114-132	()-114-145	()-130-132	()-130-145
M() TRCU2 G8A	()-022-132	()-022-145	()-030-132	()-030-145	()-138-132	()-138-145	()-146-132	()-146-145
M() TRCU G9A	()-026-132	()-026-145	()-042-132	()-042-145	()-154-132	()-154-145	()-170-132	()-170-145
M() TRCU2 G9A	()-038-132	()-038-145	()-046-132	()-046-145	()-154-132	()-154-145	()-162-132	()-162-145

CM2 PORTS

M() TRCU G8A G9A	CM2 "0" SIDE REC 1 A	CM2 "0" SIDE XMT 1 C	CM2 "0" SIDE REC 2 B	CM2 "0" SIDE XMT 2 D	CM2 "1" SIDE REC 1 A	CM2 "1" SIDE XMT 1 C	CM2 "1" SIDE REC 2 B	CM2 "1" SIDE XMT 2 D
SM47	419-088-145				719-088-145			
SM48	419-088-113				719-088-113			
SM49	419-080-145				719-080-145			
SM50	419-080-113				719-080-113			
SM51	419-072-145				719-072-145			
SM52	419-072-113				719-072-113			
SM53	419-064-145				719-064-145			
SM54	419-064-113				719-064-113			
SM55	419-056-145				719-056-145			
SM56	419-056-113				719-056-113			
SM57	419-048-145				719-048-145			
SM58	419-048-113				719-048-113			
SM59	419-040-145				719-040-145			
SM60	419-040-113				719-040-113			
SM61	419-032-145				719-032-145			
SM62	419-032-113				719-032-113			
SM63	336-088-145				836-088-145			
SM64	336-088-113				836-088-113			
SM65	336-080-145				836-080-145			
SM66	336-080-113				836-080-113			
SM67	336-072-145				836-072-145			
SM68	336-072-113				836-072-113			
SM69	336-064-145				836-064-145			

*** CONTINUED ***

COPYRIGHT @ 2001 LUCENT TECHNOLOGIES
ALL RIGHTS RESERVED

BT13

INTERCABINET CABLING
FOR
5ESS * SWITCH
*LUCENT TRADEMARK

DWG SIZE C2 | ISSUE 117

** CONTINUED **
TABLE AC

	SINGLE FABRIC							
G8A	JL41	JL43	JL45	JL47	JL42	JL44	JL46	JL48
G9A	JL49	JL51	JL53	JL55	JL50	JL52	JL54	JL56
NCT	0A		0B		1A		1B	
LINKS	XMTR	REC	XMTR	REC	XMTR	REC	XMTR	REC
M()	( )-	( )-	( )-	( )-	( )-	( )-	( )-	( )-
TRCU	066-	066-	082-	082-	114-	114-	130-	130-
G8A	132	145	132	145	132	145	132	145
M()	( )-	( )-	( )-	( )-	( )-	( )-	( )-	( )-
TRCU2	022-	022-	030-	030-	138-	138-	146-	146-
G8A	132	145	132	145	132	145	132	145
M()	( )-	( )-	( )-	( )-	( )-	( )-	( )-	( )-
TRCU	026-	026-	042-	042-	154-	154-	170-	170-
G9A	132	145	132	145	132	145	132	145
M()	( )-	( )-	( )-	( )-	( )-	( )-	( )-	( )-
TRCU2	038-	038-	046-	046-	154-	154-	162-	162-
G9A	132	145	132	145	132	145	132	145

CM2 PORTS

M() TRCU	CM2 "0" SIDE				CM2 "1" SIDE			
G8A G9A	REC 1 A	XMT 1 C	REC 2 B	XMT 2 D	REC 1 A	XMT 1 C	REC 2 B	XMT 2 D
SM70	336-064-113				836-064-113			
SM71	336-056-145				836-056-145			
SM72	336-056-113				836-056-113			
SM73	336-048-145				836-048-145			
SM74	336-048-113				836-048-113			
SM75	336-040-145				836-040-145			
SM76	336-040-113				836-040-113			
SM77	336-032-145				836-032-145			
SM78	336-032-113				836-032-113			
SM79	319-088-145				819-088-145			
SM80	319-088-113				819-088-113			
SM81	319-080-145				819-080-145			
SM82	319-080-113				819-080-113			
SM83	319-072-145				819-072-145			
SM84	319-072-113				819-072-113			
SM85	319-064-145				819-064-145			
SM86	319-064-113				819-064-113			
SM87	319-056-145				819-056-145			
SM88	319-056-113				819-056-113			
SM89	319-048-145				819-048-145			
SM90	319-048-113				819-048-113			
SM91	319-040-145				819-040-145			
SM92	319-040-113				819-040-113			

*** CONTINUED ***

** CONTINUED **
TABLE AC

	SINGLE FABRIC							
G8A	JL41	JL43	JL45	JL47	JL42	JL44	JL46	JL48
G9A	JL49	JL51	JL53	JL55	JL50	JL52	JL54	JL56
NCT	0A		0B		1A		1B	
LINKS	XMTR	REC	XMTR	REC	XMTR	REC	XMTR	REC
M()	( )-	( )-	( )-	( )-	( )-	( )-	( )-	( )-
TRCU	066-	066-	082-	082-	114-	114-	130-	130-
G8A	132	145	132	145	132	145	132	145
M()	( )-	( )-	( )-	( )-	( )-	( )-	( )-	( )-
TRCU2	022-	022-	030-	030-	138-	138-	146-	146-
G8A	132	145	132	145	132	145	132	145
M()	( )-	( )-	( )-	( )-	( )-	( )-	( )-	( )-
TRCU	026-	026-	042-	042-	154-	154-	170-	170-
G9A	132	145	132	145	132	145	132	145
M()	( )-	( )-	( )-	( )-	( )-	( )-	( )-	( )-
TRCU2	038-	038-	046-	046-	154-	154-	162-	162-
G9A	132	145	132	145	132	145	132	145

CM2 PORTS

M() TRCU	CM2 "0" SIDE				CM2 "1" SIDE			
G8A G9A	REC 1 A	XMT 1 C	REC 2 B	XMT 2 D	REC 1 A	XMT 1 C	REC 2 B	XMT 2 D
SM93	319-032-145				819-032-145			
SM94	319-032-113				819-032-113			

TABLE AD

	DUAL FABRIC (ODD SM) M() TRCU							
G8A	JL41	JL43	JL45	JL47	JL42	JL44	JL46	JL48
G9A	JL49	JL51	JL53	JL55	JL50	JL52	JL54	JL56
NCT	OA		OB		1A		1B	
LINKS	XMTR	REC	XMTR	REC	XMTR	REC	XMTR	REC
M()	( )-	( )-	( )-	( )-	( )-	( )-	( )-	( )-
TRCU	066-	066-	082-	082-	114-	114-	130-	130-
G8A	132	145	132	145	132	145	132	145
M()	( )-	( )-	( )-	( )-	( )-	( )-	( )-	( )-
TRCU2	022-	022-	030-	030-	138-	138-	146-	146-
G8A	132	145	132	145	132	145	132	145
M()	( )-	( )-	( )-	( )-	( )-	( )-	( )-	( )-
TRCU	026-	026-	042-	042-	154-	154-	170-	170-
G9A	132	145	132	145	132	145	132	145
M()	( )-	( )-	( )-	( )-	( )-	( )-	( )-	( )-
TRCU2	038-	038-	046-	046-	154-	154-	162-	162-
G9A	132	145	132	145	132	145	132	145

CM2 PORTS

ODD ORM (SM)	CM2 "0" SIDE				CM2 "1" SIDE			
	REC 1 A	XMT 1 C	REC 1 A	XMT 1 C	REC 1 A	XMT 1 C	REC 1 A	XMT 1 C
SM1	536-088-145		519-088-145		636-088-145		619-088-145	
SM3	536-080-145		519-080-145		636-080-145		619-080-145	
SM5	536-080-113		519-080-113		636-080-113		619-080-113	

*** CONTINUED ***

** CONTINUED **
TABLE AD

	DUAL FABRIC (ODD SM) M() TRCU							
G8A	JL41	JL43	JL45	JL47	JL42	JL44	JL46	JL48
G9A	JL49	JL51	JL53	JL55	JL50	JL52	JL54	JL56
NCT	OA		OB		1A		1B	
LINKS	XMTR	REC	XMTR	REC	XMTR	REC	XMTR	REC
M()	( )-	( )-	( )-	( )-	( )-	( )-	( )-	( )-
TRCU	066-	066-	082-	082-	114-	114-	130-	130-
G8A	132	145	132	145	132	145	132	145
M()	( )-	( )-	( )-	( )-	( )-	( )-	( )-	( )-
TRCU2	022-	022-	030-	030-	138-	138-	146-	146-
G8A	132	145	132	145	132	145	132	145
M()	( )-	( )-	( )-	( )-	( )-	( )-	( )-	( )-
TRCU	026-	026-	042-	042-	154-	154-	170-	170-
G9A	132	145	132	145	132	145	132	145
M()	( )-	( )-	( )-	( )-	( )-	( )-	( )-	( )-
TRCU2	038-	038-	046-	046-	154-	154-	162-	162-
G9A	132	145	132	145	132	145	132	145

CM2 PORTS

ODD ORM (SM)	CM2 "0" SIDE				CM2 "1" SIDE			
	REC 1 A	XMT 1 C	REC 1 A	XMT 1 C	REC 1 A	XMT 1 C	REC 1 A	XMT 1 C
SM7	536-072-145		519-072-145		636-072-145		619-072-145	
SM9	536-072-113		519-072-113		636-072-113		619-072-113	
SM11	536-064-145		519-064-145		636-064-145		619-064-145	
SM13	536-064-113		519-064-113		636-064-113		619-064-113	
SM15	536-056-145		519-056-145		636-056-145		619-056-145	
SM17	536-056-113		519-056-113		636-056-113		619-056-113	
SM19	536-048-145		519-048-145		636-048-145		619-048-145	
SM21	536-048-113		519-048-113		636-048-113		619-048-113	
SM23	536-040-145		519-040-145		636-040-145		619-040-145	
SM25	536-040-113		519-040-113		636-040-113		619-040-113	
SM27	536-032-145		519-032-145		636-032-145		619-032-145	
SM29	536-032-113		519-032-113		636-032-113		619-032-113	
SM31	436-088-145		419-088-145		736-088-145		719-088-145	
SM33	436-088-113		419-088-113		736-088-113		719-088-113	
SM35	436-080-145		419-080-145		736-080-145		719-080-145	
SM37	436-080-113		419-080-113		736-080-113		719-080-113	
SM39	436-072-145		419-072-145		736-072-145		719-072-145	
SM41	436-072-113		419-072-113		736-072-113		719-072-113	
SM43	436-064-145		419-064-145		736-064-145		719-064-145	
SM45	436-064-113		419-064-113		736-064-113		719-064-113	
SM47	436-056-145		419-056-145		736-056-145		719-056-145	
SM49	436-056-113		419-056-113		736-056-113		719-056-113	
SM51	436-048-145		419-048-145		736-048-145		719-048-145	

*** CONTINUED ***

** CONTINUED **
TABLE AD

	DUAL FABRIC (ODD SM) M() TRCU							
G8A	JL41	JL43	JL45	JL47	JL42	JL44	JL46	JL48
G9A	JL49	JL51	JL53	JL55	JL50	JL52	JL54	JL56
NCT	OA		OB		1A		1B	
LINKS	XMTR	REC	XMTR	REC	XMTR	REC	XMTR	REC
M()	( )-	( )-	( )-	( )-	( )-	( )-	( )-	( )-
TRCU	066-	066-	082-	082-	114-	114-	130-	130-
G8A	132	145	132	145	132	145	132	145
M()	( )-	( )-	( )-	( )-	( )-	( )-	( )-	( )-
TRCU2	022-	022-	030-	030-	138-	138-	146-	146-
G8A	132	145	132	145	132	145	132	145
M()	( )-	( )-	( )-	( )-	( )-	( )-	( )-	( )-
TRCU	026-	026-	042-	042-	154-	154-	170-	170-
G9A	132	145	132	145	132	145	132	145
M()	( )-	( )-	( )-	( )-	( )-	( )-	( )-	( )-
TRCU2	038-	038-	046-	046-	154-	154-	162-	162-
G9A	132	145	132	145	132	145	132	145

CM2 PORTS

ODD ORM (SM)	CM2 "0" SIDE				CM2 "1" SIDE			
	REC 1 A	XMT 1 C	REC 1 A	XMT 1 C	REC 1 A	XMT 1 C	REC 1 A	XMT 1 C
SM53	436-048-113		419-048-113		736-048-113		719-048-113	
SM55	436-040-145		419-040-145		736-040-145		719-040-145	
SM57	436-040-113		419-040-113		736-040-113		719-040-113	
SM59	436-032-145		419-032-145		736-032-145		719-032-145	
SM61	436-032-113		419-032-113		736-032-113		719-032-113	
SM63	336-088-145		319-088-145		836-088-145		819-088-145	
SM65	336-088-113		319-088-113		836-088-113		819-088-113	
SM67	336-080-145		319-080-145		836-080-145		819-080-145	
SM69	336-080-113		319-080-113		836-080-113		819-080-113	
SM71	336-072-145		319-072-145		836-072-145		819-072-145	
SM73	336-072-113		319-072-113		836-072-113		819-072-113	
SM75	336-064-145		319-064-145		836-064-145		819-064-145	
SM77	336-064-113		319-064-113		836-064-113		819-064-113	
SM79	336-056-145		319-056-145		836-056-145		819-056-145	
SM81	336-056-113		319-056-113		836-056-113		819-056-113	
SM83	336-048-145		319-048-145		836-048-145		819-048-145	
SM85	336-048-113		319-048-113		836-048-113		819-048-113	
SM87	336-040-145		319-040-145		836-040-145		819-040-145	
SM89	336-040-113		319-040-113		836-040-113		819-040-113	
SM91	336-032-145		319-032-145		836-032-145		819-032-145	
SM93	336-032-113		319-032-113		836-032-113		819-032-113	
SM95	236-088-145		219-088-145		936-088-145		919-088-145	
SM97	236-088-113		219-088-113		936-088-113		919-088-113	

*** CONTINUED ***

COPYRIGHT @ 2001 LUCENT TECHNOLOGIES
ALL RIGHTS RESERVED

BT13

INTERCABINET CABLING
FOR
5ESS * SWITCH
*LUCENT TRADEMARK

DWG SIZE C2 | ISSUE 117

LUCENT TECHNOLOGIES INC | ED5D500-21 | SHEET D28 OF 292

PRINTED IN U.S.A.

** CONTINUED **
TABLE AD

DUAL FABRIC (ODD SM) M() TRCU

G8A / G9A	JL41 / JL49	JL43 / JL51	JL45 / JL53	JL47 / JL55	JL42 / JL50	JL44 / JL52	JL46 / JL54	JL48 / JL56
NCT	OA		OB		1A		1B	
LINKS	XMTR	REC	XMTR	REC	XMTR	REC	XMTR	REC
M() TRCU G8A	( )-066-132	( )-066-145	( )-082-132	( )-082-145	( )-114-132	( )-114-145	( )-130-132	( )-130-145
M() TRCU2 G8A	( )-022-132	( )-022-145	( )-030-132	( )-030-145	( )-138-132	( )-138-145	( )-146-132	( )-146-145
M() TRCU G9A	( )-026-132	( )-026-145	( )-042-132	( )-042-145	( )-154-132	( )-154-145	( )-170-132	( )-170-145
M() TRCU2 G9A	( )-038-132	( )-038-145	( )-046-132	( )-046-145	( )-154-132	( )-154-145	( )-162-132	( )-162-145

CM2 PORTS

ODD ORM (SM)	CM2 "0" SIDE REC 1 A / XMT 1 C	CM2 "0" SIDE REC 1 A / XMT 1 C	CM2 "1" SIDE REC 1 A / XMT 1 C	CM2 "1" SIDE REC 1 A / XMT 1 C
SM99	236-080-145	219-080-145	936-080-145	919-080-145
SM101	236-080-113	219-080-113	936-080-113	919-080-113
SM103	236-072-145	219-072-145	936-072-145	919-072-145
SM105	236-072-113	219-072-113	936-072-113	919-072-113
SM107	236-064-145	219-064-145	936-064-145	919-064-145
SM109	236-064-113	219-064-113	936-064-113	919-064-113
SM111	236-056-145	219-056-145	936-056-145	919-056-145
SM113	236-056-113	219-056-113	936-056-113	919-056-113
SM115	236-048-145	219-048-145	936-048-145	919-488-143
SM117	236-048-113	219-048-113	936-048-113	919-048-113
SM119	236-040-145	219-040-145	936-040-145	919-040-145
SM121	236-040-113	219-040-113	936-040-113	919-040-113
SM123	236-032-145	219-032-145	936-032-145	919-032-145
SM125	236-032-113	219-032-113	936-032-113	919-032-113
SM127	136-088-145	119-088-145	1036-088-145	1019-088-145
SM129	136-088-113	119-088-113	1036-088-113	1019-088-113
SM131	136-080-145	119-080-145	1036-080-145	1019-080-145
SM133	136-080-113	119-080-113	1036-080-113	1019-080-113
SM135	136-072-145	119-072-145	1036-072-145	1019-072-145
SM137	136-072-113	119-072-113	1036-072-113	1019-072-113
SM139	136-064-145	119-064-145	1036-064-145	1019-064-145
SM141	136-064-113	119-064-113	1036-064-113	1019-064-113
SM143	136-056-145	119-056-145	1036-056-145	1019-056-145

*** CONTINUED ***

** CONTINUED **
TABLE AD

DUAL FABRIC (ODD SM) M() TRCU

G8A / G9A	JL41 / JL49	JL43 / JL51	JL45 / JL53	JL47 / JL55	JL42 / JL50	JL44 / JL52	JL46 / JL54	JL48 / JL56
NCT	OA		OB		1A		1B	
LINKS	XMTR	REC	XMTR	REC	XMTR	REC	XMTR	REC
M() TRCU G8A	( )-066-132	( )-066-145	( )-082-132	( )-082-145	( )-114-132	( )-114-145	( )-130-132	( )-130-145
M() TRCU2 G8A	( )-022-132	( )-022-145	( )-030-132	( )-030-145	( )-138-132	( )-138-145	( )-146-132	( )-146-145
M() TRCU G9A	( )-026-132	( )-026-145	( )-042-132	( )-042-145	( )-154-132	( )-154-145	( )-170-132	( )-170-145
M() TRCU2 G9A	( )-038-132	( )-038-145	( )-046-132	( )-046-145	( )-154-132	( )-154-145	( )-162-132	( )-162-145

CM2 PORTS

ODD ORM (SM)	CM2 "0" SIDE REC 1 A / XMT 1 C	CM2 "0" SIDE REC 1 A / XMT 1 C	CM2 "1" SIDE REC 1 A / XMT 1 C	CM2 "1" SIDE REC 1 A / XMT 1 C
SM145	136-056-113	119-056-113	1036-056-113	1019-056-113
SM147	136-048-145	119-048-145	1036-048-145	1019-048-145
SM149	136-048-113	119-048-113	1036-048-113	1019-048-113
SM151	136-040-145	119-040-145	1036-040-145	1019-040-145
SM153	136-040-113	119-040-113	1036-040-113	1019-040-113
SM155	136-032-145	119-032-145	1036-032-145	1019-032-145
SM157	136-032-113	119-032-113	1036-032-113	1019-032-113
SM159	036-088-145	019-088-145	1136-088-145	1119-088-145
SM161	036-088-113	019-088-113	1136-088-113	1119-088-113
SM163	036-080-145	019-080-145	1136-088-145	1119-080-145
SM165	036-080-113	019-080-113	1136-080-113	1119-080-113
SM167	036-072-145	019-072-145	1136-072-145	1119-072-145
SM169	036-072-113	019-072-113	1136-072-113	1119-072-113
SM171	036-064-145	019-064-145	1136-064-145	1119-064-145
SM173	036-064-113	019-064-113	1136-064-113	1119-064-113
SM175	036-056-145	019-056-145	1136-056-145	1119-056-145
SM177	036-056-113	019-056-113	1136-056-113	1119-056-113
SM179	036-048-145	019-048-145	1136-048-145	1119-048-145
SM181	036-048-113	019-048-113	1136-048-113	1119-048-113
SM183	036-040-145	019-040-145	1136-040-145	1119-040-145
SM185	036-040-113	019-040-113	1136-040-113	1119-040-113
SM187	036-032-145	019-032-145	1136-032-145	1119-032-145
SM189	036-032-113	019-032-113	1136-032-113	1119-032-113

TABLE AD-1

DUAL FABRIC (EVEN SM) M() TRCU

G8A / G9A	JL41 / JL49	JL43 / JL51	JL45 / JL53	JL47 / JL55	JL42 / JL50	JL44 / JL52	JL46 / JL54	JL48 / JL56
NCT	OA		OB		1A		1B	
LINKS	XMTR	REC	XMTR	REC	XMTR	REC	XMTR	REC
M() TRCU G8A	( )-066-132	( )-066-145	( )-082-132	( )-082-145	( )-114-132	( )-114-145	( )-130-132	( )-130-145
M() TRCU2 G8A	( )-022-132	( )-022-145	( )-030-132	( )-030-145	( )-138-132	( )-138-145	( )-146-132	( )-146-145
M() TRCU G9A	( )-026-132	( )-026-145	( )-042-132	( )-042-145	( )-154-132	( )-154-145	( )-170-132	( )-170-145
M() TRCU2 G9A	( )-038-132	( )-038-145	( )-046-132	( )-046-145	( )-154-132	( )-154-145	( )-162-132	( )-162-145

CM2 PORTS

EVEN ORM (SM)	CM2 '0' SIDE REC 2 B / XMT 2 D	CM2 '0' SIDE REC 2 B / XMT 2 D	CM2 '1' SIDE REC 2 B / XMT 2 D	CM2 '1' SIDE REC 2 B / XMT 2 D
SM2	536-088-145	519-088-145	636-088-145	619-088-145
SM4	536-080-145	519-080-145	636-080-145	619-080-145
SM6	536-080-113	519-080-113	636-080-113	619-080-113
SM8	536-072-145	519-072-145	636-072-145	619-072-145
SM10	536-072-113	519-072-113	636-072-113	619-072-113
SM12	536-064-145	519-064-145	636-064-145	619-064-145
SM14	536-064-113	519-064-113	636-064-113	619-064-113
SM16	536-056-145	519-056-145	636-056-145	619-056-145
SM18	536-056-113	519-056-113	636-056-113	619-056-113
SM20	536-048-145	519-048-145	636-048-145	619-048-145
SM22	536-048-113	519-048-113	636-048-113	619-048-113
SM24	536-040-145	519-040-145	636-040-145	619-040-145
SM26	536-040-113	519-040-113	636-040-113	619-040-113
SM28	536-032-145	519-032-145	636-032-145	619-032-145
SM30	536-032-113	519-032-113	636-032-113	619-032-113
SM32	436-088-145	419-088-145	736-088-145	719-088-145
SM34	436-088-113	419-088-113	736-088-113	719-088-113
SM36	436-080-145	419-080-145	736-080-145	719-080-145
SM38	436-080-113	419-080-113	736-080-113	719-080-113
SM40	436-072-145	419-072-145	736-072-145	719-072-145
SM42	436-072-113	419-072-113	736-072-113	719-072-113
SM44	436-064-145	419-064-145	736-064-145	719-064-145
SM46	436-064-113	419-064-113	736-064-113	719-064-113

*** CONTINUED ***

** CONTINUED **
TABLE AD-1

DUAL FABRIC (EVEN SM) M() TRCU

G8A / G9A	JL41 / JL49	JL43 / JL51	JL45 / JL53	JL47 / JL55	JL42 / JL50	JL44 / JL52	JL46 / JL54	JL48 / JL56
NCT	OA		OB		1A		1B	
LINKS	XMTR	REC	XMTR	REC	XMTR	REC	XMTR	REC
M() TRCU G8A	( )-066-132	( )-066-145	( )-082-132	( )-082-145	( )-114-132	( )-114-145	( )-130-132	( )-130-145
M() TRCU2 G8A	( )-022-132	( )-022-145	( )-030-132	( )-030-145	( )-138-132	( )-138-145	( )-146-132	( )-146-145
M() TRCU G9A	( )-026-132	( )-026-145	( )-042-132	( )-042-145	( )-154-132	( )-154-145	( )-170-132	( )-170-145
M() TRCU2 G9A	( )-038-132	( )-038-145	( )-046-132	( )-046-145	( )-154-132	( )-154-145	( )-162-132	( )-162-145

CM2 PORTS

EVEN ORM (SM)	CM2 '0' SIDE REC 2 B / XMT 2 D	CM2 '0' SIDE REC 2 B / XMT 2 D	CM2 '1' SIDE REC 2 B / XMT 2 D	CM2 '1' SIDE REC 2 B / XMT 2 D
SM48	436-056-145	419-056-145	736-056-145	719-056-145
SM50	436-056-113	419-056-113	736-056-113	719-056-113
SM52	436-048-145	419-048-145	736-048-145	719-048-145
SM54	436-048-113	419-048-113	736-048-113	719-048-113
SM56	436-040-145	419-040-145	736-040-145	719-040-145
SM58	436-040-113	419-040-113	736-040-113	719-040-113
SM60	436-032-145	419-032-145	736-032-145	719-032-145
SM62	436-032-113	419-032-113	736-032-113	719-032-113
SM64	336-088-145	319-088-145	836-088-145	819-088-145
SM66	336-088-113	319-088-113	836-088-113	819-088-113
SM68	336-080-145	319-080-145	836-080-145	819-080-113
SM70	336-080-113	319-080-113	836-080-113	819-080-113
SM72	336-072-145	319-072-145	836-072-145	819-072-145
SM74	336-072-113	319-072-113	836-072-113	819-072-113
SM76	336-064-145	319-064-145	836-064-145	819-064-145
SM78	336-064-113	319-064-113	836-064-113	819-064-113
SM80	336-056-145	319-056-145	836-056-145	819-056-145
SM82	336-056-113	319-056-113	836-056-113	819-056-113
SM84	336-048-145	319-048-145	836-048-145	819-048-145
SM86	336-048-113	319-048-113	836-048-113	819-048-113
SM88	336-040-145	319-040-145	836-040-145	819-040-145
SM90	336-040-113	319-040-113	836-040-113	819-040-113
SM92	336-032-145	319-032-145	836-032-145	819-032-145

*** CONTINUED ***

COPYRIGHT @ 2001 LUCENT TECHNOLOGIES
ALL RIGHTS RESERVED

BT13

INTERCABINET CABLING
FOR
5ESS * SWITCH
*LUCENT TRADEMARK

DWG SIZE C2 | ISSUE 117

** CONTINUED **
TABLE AD-1

DUAL FABRIC (EVEN SM) M() TRCU

G8A / G9A	JL41 / JL49	JL43 / JL51	JL45 / JL53	JL47 / JL55	JL42 / JL50	JL44 / JL52	JL46 / JL54	JL48 / JL56
NCT	OA		OB		1A		1B	
LINKS	XMTR	REC	XMTR	REC	XMTR	REC	XMTR	REC
M() TRCU G8A	( )-066-132	( )-066-145	( )-082-132	( )-082-145	( )-114-132	( )-114-145	( )-130-132	( )-130-145
M() TRCU2 G8A	( )-022-132	( )-022-145	( )-030-132	( )-030-145	( )-138-132	( )-138-145	( )-146-132	( )-146-145
M() TRCU G9A	( )-026-132	( )-026-145	( )-042-132	( )-042-145	( )-154-132	( )-154-145	( )-170-132	( )-170-145
M() TRCU2 G9A	( )-038-132	( )-038-145	( )-046-132	( )-046-145	( )-154-132	( )-154-145	( )-162-132	( )-162-145

CM2 PORTS

EVEN ORM (SM)	CM2 '0' SIDE REC 2 B	CM2 '0' SIDE XMT 2 D	CM2 '1' SIDE REC 2 B	CM2 '1' SIDE XMT 2 D
SM94	336-032-113	319-032-113	836-032-113	819-032-113
SM96	236-088-145	219-088-145	936-088-145	919-088-145
SM98	236-088-113	219-088-113	936-088-113	919-088-113
SM100	236-080-145	219-080-145	936-080-145	919-080-145
SM102	236-080-113	219-080-113	936-080-113	919-080-113
SM104	236-072-145	219-072-145	936-072-145	919-072-145
SM106	236-072-113	219-072-113	936-072-113	919-072-113
SM108	236-064-145	219-064-145	936-064-145	919-064-145
SM110	236-064-113	219-064-113	936-064-113	919-064-113
SM112	236-056-145	219-056-145	936-056-145	919-056-145
SM114	236-056-113	219-056-113	936-056-113	919-056-113
SM116	236-048-145	219-048-145	936-048-145	919-048-145
SM118	236-048-113	219-048-113	936-048-113	919-048-113
SM120	236-040-145	219-040-145	936-040-145	919-040-145
SM122	236-040-113	219-040-113	936-040-113	919-040-113
SM124	236-032-145	219-032-145	936-032-145	919-032-145
SM126	236-032-113	219-032-113	936-032-113	919-032-113
SM128	136-088-145	119-088-145	1036-088-145	1019-088-145
SM130	136-088-113	119-088-113	1036-088-113	1019-088-113
SM132	136-080-145	119-080-145	1036-080-145	1019-080-145
SM134	136-080-113	119-080-113	1036-080-113	1019-080-113
SM136	136-072-145	119-072-145	1036-072-145	1019-072-145
SM138	136-072-113	119-072-113	1036-072-113	1019-072-113

*** CONTINUED ***

** CONTINUED **
TABLE AD-1

DUAL FABRIC (EVEN SM) M() TRCU

G8A / G9A	JL41 / JL49	JL43 / JL51	JL45 / JL53	JL47 / JL55	JL42 / JL50	JL44 / JL52	JL46 / JL54	JL48 / JL56
NCT	OA		OB		1A		1B	
LINKS	XMTR	REC	XMTR	REC	XMTR	REC	XMTR	REC
M() TRCU G8A	( )-066-132	( )-066-145	( )-082-132	( )-082-145	( )-114-132	( )-114-145	( )-130-132	( )-130-145
M() TRCU2 G8A	( )-022-132	( )-022-145	( )-030-132	( )-030-145	( )-138-132	( )-138-145	( )-146-132	( )-146-145
M() TRCU G9A	( )-026-132	( )-026-145	( )-042-132	( )-042-145	( )-154-132	( )-154-145	( )-170-132	( )-170-145
M() TRCU2 G9A	( )-038-132	( )-038-145	( )-046-132	( )-046-145	( )-154-132	( )-154-145	( )-162-132	( )-162-145

CM2 PORTS

EVEN ORM (SM)	CM2 '0' SIDE REC 2 B	CM2 '0' SIDE XMT 2 D	CM2 '1' SIDE REC 2 B	CM2 '1' SIDE XMT 2 D
SM140	136-064-145	119-064-145	1036-064-145	1019-064-145
SM142	136-064-113	119-064-113	1036-064-113	1019-064-113
SM144	136-056-145	119-056-145	1036-056-145	1019-056-145
SM146	136-056-113	119-056-113	1036-056-113	1019-056-113
SM148	136-048-145	119-048-145	1036-048-145	1019-048-145
SM150	136-048-113	119-048-113	1036-048-113	1019-048-113
SM152	136-040-145	119-040-145	1036-040-145	1019-040-145
SM154	136-040-113	119-040-113	1036-040-113	1019-040-113
SM156	136-032-145	119-032-145	1036-032-145	1019-032-145
SM158	136-032-113	119-032-113	1036-032-113	1019-032-113
SM160	036-088-145	019-088-145	1136-088-145	1119-088-145
SM162	036-088-113	019-088-113	1136-088-113	1119-088-113
SM164	036-080-145	019-080-145	1136-080-145	1119-080-145
SM166	036-080-113	019-080-113	1136-080-113	1119-080-113
SM168	036-072-145	019-072-145	1136-072-145	1119-072-145
SM170	036-072-113	019-072-113	1136-072-113	1119-072-113
SM172	036-064-145	019-064-145	1136-064-145	1119-064-113
SM174	036-064-113	019-064-113	1136-064-113	1119-064-113
SM176	036-056-145	019-056-145	1136-056-145	1119-056-145
SM178	036-056-113	019-056-113	1136-056-113	1119-056-113
SM180	036-048-145	019-048-145	1136-048-145	1119-048-145
SM182	036-048-113	019-048-113	1136-048-113	1119-048-113
SM184	036-040-145	019-040-145	1136-040-145	1119-040-145

*** CONTINUED ***

** CONTINUED **
TABLE AD-1

DUAL FABRIC (EVEN SM) M() TRCU

G8A / G9A	JL41 / JL49	JL43 / JL51	JL45 / JL53	JL47 / JL55	JL42 / JL50	JL44 / JL52	JL46 / JL54	JL48 / JL56
NCT	OA		OB		1A		1B	
LINKS	XMTR	REC	XMTR	REC	XMTR	REC	XMTR	REC
M() TRCU G8A	( )-066-132	( )-066-145	( )-082-132	( )-082-145	( )-114-132	( )-114-145	( )-130-132	( )-130-145
M() TRCU2 G8A	( )-022-132	( )-022-145	( )-030-132	( )-030-145	( )-138-132	( )-138-145	( )-146-132	( )-146-145
M() TRCU G9A	( )-026-132	( )-026-145	( )-042-132	( )-042-145	( )-154-132	( )-154-145	( )-170-132	( )-170-145
M() TRCU2 G9A	( )-038-132	( )-038-145	( )-046-132	( )-046-145	( )-154-132	( )-154-145	( )-162-132	( )-162-145

CM2 PORTS

EVEN ORM (SM)	CM2 '0' SIDE REC 2 B	CM2 '0' SIDE XMT 2 D	CM2 '1' SIDE REC 2 B	CM2 '1' SIDE XMT 2 D
SM186	036-040-113	019-040-113	1136-040-113	1119-040-113
SM188	036-032-145	019-032-145	1136-032-145	1119-032-145
SM190	036-032-113	019-032-113	1136-032-113	1119-032-113

TABLE AD-2
TRM NCT LINKS FROM MCTU TO LSCIM,LSCIT OR LGX (REMOTE)

G6,6B MCTU TO LSCIT /M OR LGX	JL17	JL19	JL21	JL23	JL18	JL20	JL22	JL24
NCT	OA		OB		1A		1B	
LINKS	XMTR	REC	XMTR	REC	XMTR	REC	XMTR	REC
MCTU EQL G6	136-084-332 982TA		136-084-300 982WY		136-098-332 982TA		136-098-300 982WY	
MCTU2 EQL G6B	119-156-332 982TA		119-156-300 982WY		128-156-332 982TA		128-156-300 982WY	

TABLE AE
TRM NCT LINKS FROM CM2 TO LSCIM,LSCIT,LGX HOST

SINGLE FABRIC

G7 CM2 TO LSCIT /M	JL25	JL27	JL29	JL31	JL26	JL28	JL30	JL32

CM2 PORTS (982TH CONN)

SM NBR	CM2 '0' SIDE REC 1 A	CM2 '0' SIDE XMT 1 C	CM2 '0' SIDE REC 2 B	CM2 '0' SIDE XMT 2 D	CM2 '1' SIDE REC 1 A	CM2 '1' SIDE XMT 1 C	CM2 '1' SIDE REC 2 B	CM2 '1' SIDE XMT 2 D
SM1	536-088-145				636-088-145			
SM2	536-080-145				636-080-145			
SM3	536-080-113				636-080-113			
SM4	536-072-145				636-072-145			
SM5	536-072-113				636-072-113			
SM6	536-064-145				636-064-145			
SM7	536-064-113				636-064-113			
SM8	536-056-145				636-056-145			
SM9	536-056-113				636-056-113			
SM10	536-048-145				636-048-145			
SM11	536-048-113				636-048-113			
SM12	536-040-145				636-040-145			
SM13	536-040-113				636-040-113			
SM14	536-032-145				636-032-145			
SM15	536-032-113				636-032-113			
SM16	519-088-145				619-088-145			
SM17	519-080-145				619-080-145			
SM18	519-080-113				619-080-113			
SM19	519-072-145				619-072-145			
SM20	519-072-113				619-072-113			
SM21	519-064-145				619-064-145			
SM22	519-064-113				619-064-113			
SM23	519-056-145				619-056-145			
SM24	519-056-113				619-056-113			
SM25	519-048-145				619-048-145			
SM26	519-048-113				619-048-113			
SM27	519-040-145				619-040-145			
SM28	519-040-113				619-040-113			
SM29	519-032-145				619-032-145			
SM30	519-032-113				619-032-113			
SM31	436-088-145				736-088-145			

*** CONTINUED ***

COPYRIGHT @ 2001 LUCENT TECHNOLOGIES
ALL RIGHTS RESERVED

BT13

INTERCABINET CABLING
FOR
5ESS * SWITCH
*LUCENT TRADEMARK

DWG SIZE C2 | ISSUE 117

PRINTED IN U.S.A.

** CONTINUED **
TABLE AE
TRM NCT LINKS FROM CM2 TO LSCIM,LSCIT,LGX HOST

SINGLE FABRIC

G7 CM2 TO LSCIT /M	JL25	JL27	JL29	JL31	JL26	JL28	JL30	JL32

CM2 PORTS (982TH CONN)

SM NBR	CM2 '0' SIDE				CM2 '1' SIDE			
	REC 1 A	XMT 1 C	REC 2 B	XMT 2 D	REC 1 A	XMT 1 C	REC 2 B	XMT 2 D
SM1	536-088-145				636-088-145			
SM32	436-088-113				736-088-113			
SM33	436-080-145				736-080-145			
SM34	436-080-113				736-080-113			
SM35	436-072-145				736-072-145			
SM36	436-072-113				736-072-113			
SM37	436-064-145				736-064-145			
SM38	436-064-113				736-064-113			
SM39	436-056-145				736-056-145			
SM40	436-056-113				736-056-113			
SM41	436-048-145				736-048-145			
SM42	436-048-113				736-048-113			
SM43	436-040-145				736-040-145			
SM44	436-040-113				736-040-113			
SM45	436-032-145				736-032-145			
SM46	436-032-113				736-032-113			
SM47	419-088-145				719-088-145			
SM48	419-088-113				719-088-113			
SM49	419-080-145				719-080-145			
SM50	419-080-113				719-080-113			
SM51	419-072-145				719-072-145			
SM52	419-072-113				719-072-113			
SM53	419-064-145				719-064-145			
SM54	419-064-113				719-064-113			
SM55	419-056-145				719-056-145			
SM56	419-056-113				719-056-113			
SM57	419-048-145				719-048-145			
SM58	419-048-113				719-048-113			
SM59	419-040-145				719-040-145			
SM60	419-040-113				719-040-113			
SM61	419-032-145				719-032-145			
SM62	419-032-113				719-032-113			

*** CONTINUED ***

** CONTINUED **
TABLE AE
TRM NCT LINKS FROM CM2 TO LSCIM,LSCIT,LGX HOST

SINGLE FABRIC

G7 CM2 TO LSCIT /M	JL25	JL27	JL29	JL31	JL26	JL28	JL30	JL32

CM2 PORTS (982TH CONN)

SM NBR	CM2 '0' SIDE				CM2 '1' SIDE			
	REC 1 A	XMT 1 C	REC 2 B	XMT 2 D	REC 1 A	XMT 1 C	REC 2 B	XMT 2 D
SM1	536-088-145				636-088-145			
SM63	336-088-145				836-088-145			
SM64	336-088-113				836-088-113			
SM65	336-080-145				836-080-145			
SM66	336-080-113				836-080-113			
SM67	336-072-145				836-072-145			
SM68	336-072-113				836-072-113			
SM69	336-064-145				836-064-145			
SM70	336-064-113				836-064-113			
SM71	336-056-145				836-056-145			
SM72	336-056-113				836-056-113			
SM73	336-048-145				836-048-145			
SM74	336-048-113				836-048-113			
SM75	336-040-145				836-040-145			
SM76	336-040-113				836-040-113			
SM77	336-032-145				836-032-145			
SM78	336-032-113				836-032-113			
SM79	319-088-145				819-088-145			
SM80	319-088-113				819-088-113			
SM81	319-080-145				819-080-145			
SM82	319-080-113				819-080-113			
SM83	319-072-145				819-072-145			
SM84	319-072-113				819-072-113			
SM85	319-064-145				819-064-145			
SM86	319-064-113				819-064-113			
SM87	319-056-145				819-056-145			
SM88	319-056-113				819-056-113			
SM89	319-048-145				819-048-145			
SM90	319-048-113				819-048-113			
SM91	319-040-145				819-040-145			
SM92	319-040-113				819-040-113			

*** CONTINUED ***

** CONTINUED **
TABLE AE
TRM NCT LINKS FROM CM2 TO LSCIM,LSCIT,LGX HOST

SINGLE FABRIC

G7 CM2 TO LSCIT /M	JL25	JL27	JL29	JL31	JL26	JL28	JL30	JL32

CM2 PORTS (982TH CONN)

SM NBR	CM2 '0' SIDE				CM2 '1' SIDE			
	REC 1 A	XMT 1 C	REC 2 B	XMT 2 D	REC 1 A	XMT 1 C	REC 2 B	XMT 2 D
SM1	536-088-145				636-088-145			
SM93	319-032-145				819-032-145			
SM94	319-032-113				819-032-113			

TABLE AE-1
TRM NCT LINKS FROM CM2 TO LSCIT,LSCIM,LGX HOST

DUAL FABRIC (ODD SM)

G7 CM2 TO LSCIT /M OR LGX	JL25	JL27	JL29	JL31	JL26	JL28	JL30	JL32

CM2 PORTS (982TH CONN)

ODD SM NBR	CM2 '0' SIDE				CM2 '1' SIDE			
	REC 1 A	XMT 1 C	REC 1 A	XMT 1 C	REC 1 A	XMT 1 C	REC 1 A	XMT 1 C
SM1	536-088-145		519-088-145		636-088-145		619-088-145	
SM3	536-080-145		519-080-145		636-080-145		619-080-145	
SM5	536-080-113		519-080-113		636-080-113		619-080-113	
SM7	536-072-145		519-072-145		636-072-145		619-072-145	
SM9	536-072-113		519-072-113		636-072-113		619-072-113	
SM11	536-064-145		519-064-145		636-064-145		619-064-145	
SM13	536-064-113		519-064-113		636-064-113		619-064-113	
SM15	536-056-145		519-056-145		636-056-145		619-056-145	
SM17	536-056-113		519-056-113		636-056-113		619-056-113	
SM19	536-048-145		519-048-145		636-048-145		619-048-145	
SM21	536-048-113		519-048-113		636-048-113		619-048-113	
SM23	536-040-145		519-040-145		636-040-145		619-040-145	
SM25	536-040-113		519-040-113		636-040-113		619-040-113	
SM27	536-032-145		519-032-145		636-032-145		619-032-145	
SM29	536-032-113		519-032-113		636-032-113		619-032-113	
SM31	436-088-145		419-088-145		736-088-145		719-088-145	
SM33	436-088-113		419-088-113		736-088-113		719-088-113	
SM35	436-080-145		419-080-145		736-080-145		719-080-145	

*** CONTINUED ***

** CONTINUED **
TABLE AE-1
TRM NCT LINKS FROM CM2 TO LSCIT,LSCIM,LGX HOST

DUAL FABRIC (ODD SM)

G7 CM2 TO LSCIT /M OR LGX	JL25	JL27	JL29	JL31	JL26	JL28	JL30	JL32

CM2 PORTS (982TH CONN)

ODD SM NBR	CM2 '0' SIDE				CM2 '1' SIDE			
	REC 1 A	XMT 1 C	REC 1 A	XMT 1 C	REC 1 A	XMT 1 C	REC 1 A	XMT 1 C
SM37	436-080-113		419-080-113		736-080-113		719-080-113	
SM39	436-072-145		419-072-145		736-072-145		719-072-145	
SM41	436-072-113		419-072-113		736-072-113		719-072-113	
SM43	436-064-145		419-064-145		736-064-145		719-064-145	
SM45	436-064-113		419-064-113		736-064-113		719-064-113	
SM47	436-056-145		419-056-145		736-056-145		719-056-145	
SM49	436-056-113		419-056-113		736-056-113		719-056-113	
SM51	436-048-145		419-048-145		736-048-145		719-048-145	
SM53	436-048-113		419-048-113		736-048-113		719-048-113	
SM55	436-040-145		419-040-145		736-040-145		719-040-145	
SM57	436-040-113		419-040-113		736-040-113		719-040-113	
SM59	436-032-145		419-032-145		736-032-145		719-032-145	
SM61	436-032-113		419-032-113		736-032-113		719-032-113	
SM63	336-088-145		319-088-145		836-088-145		819-088-145	
SM65	336-088-113		319-088-113		836-088-113		819-088-113	
SM67	336-080-145		319-080-145		836-080-145		819-080-145	
SM69	336-080-113		319-080-113		836-080-113		819-080-113	
SM71	336-072-145		319-072-145		836-072-145		819-072-145	
SM73	336-072-113		319-072-113		836-072-113		819-072-113	
SM75	336-064-145		319-064-145		836-064-145		819-064-145	
SM77	336-064-113		319-064-113		836-064-113		819-064-113	
SM79	336-056-145		319-056-145		836-056-145		819-056-145	
SM81	336-056-113		319-056-113		836-056-113		819-056-113	
SM83	336-048-145		319-048-145		836-048-145		819-048-145	
SM85	336-048-113		319-048-113		836-048-113		819-048-113	
SM87	336-040-145		319-040-145		836-040-145		819-040-145	
SM89	336-040-113		319-040-113		836-040-113		819-040-113	
SM91	336-032-145		319-032-145		836-032-145		819-032-145	
SM93	336-032-113		319-032-113		836-032-113		819-032-113	
SM95	236-088-145		219-088-145		936-088-145		919-088-145	
SM97	236-088-113		219-088-113		936-088-113		919-088-113	

*** CONTINUED ***

COPYRIGHT @ 2001 LUCENT TECHNOLOGIES
ALL RIGHTS RESERVED

BT13

INTERCABINET CABLING
FOR
5ESS * SWITCH
*LUCENT TRADEMARK

DWG SIZE C2 | ISSUE 117

PRINTED IN U.S.A.

** CONTINUED **
TABLE AE-1
TRM NCT LINKS FROM CM2 TO LSCIT,LSCIM,LGX HOST

DUAL FABRIC (ODD SM)								
G7 CM2 TO LSCIT /M OR LGX	JL25	JL27	JL29	JL31	JL26	JL28	JL30	JL32

CM2 PORTS (982TH CONN)								
ODD SM NBR	CM2 '0' SIDE				CM2 '1' SIDE			
	REC 1 A	XMT 1 C	REC 1 A	XMT 1 C	REC 1 A	XMT 1 C	REC 1 A	XMT 1 C
SM99	236-080-145		219-080-145		936-080-145		919-080-145	
SM101	236-080-113		219-080-113		936-080-113		919-080-113	
SM103	236-072-145		219-072-145		936-072-145		919-072-113	
SM105	236-072-113		219-072-113		936-072-113		919-072-113	
SM107	236-064-145		219-064-145		936-064-145		919-064-145	
SM109	236-064-113		219-064-113		936-064-113		919-064-113	
SM111	236-056-145		219-056-145		936-056-145		919-056-145	
SM113	236-056-113		219-056-113		936-056-113		919-056-113	
SM115	236-048-145		219-048-145		936-048-145		919-488-143	
SM117	236-048-113		219-048-113		936-048-113		919-048-113	
SM119	236-040-145		219-040-145		936-040-145		919-040-145	
SM121	236-040-113		219-040-113		936-040-113		919-040-113	
SM123	236-032-145		219-032-145		936-032-145		919-032-145	
SM125	236-032-113		219-032-113		936-032-113		919-032-113	
SM127	136-088-145		119-088-145		1036-088-145		1019-088-145	
SM129	136-088-113		119-088-113		1036-088-113		1019-088-113	
SM131	136-080-145		119-080-145		1036-080-145		1019-080-145	
SM133	136-080-113		119-080-113		1036-080-113		1019-080-113	
SM135	136-072-145		119-072-145		1036-072-145		1019-072-145	
SM137	136-072-113		119-072-113		1036-072-113		1019-072-113	
SM139	136-064-145		119-064-145		1036-064-145		1019-064-145	
SM141	136-064-113		119-064-113		1036-064-113		1036-064-113	
SM143	136-056-145		119-056-145		1036-056-145		1019-056-145	
SM145	136-056-113		119-056-113		1036-056-113		1019-056-113	
SM147	136-048-145		119-048-145		1036-048-145		1019-048-145	
SM149	136-048-113		119-048-113		1036-048-113		1019-048-113	
SM151	136-040-145		119-040-145		1036-040-145		1019-040-145	
SM153	136-040-113		119-040-113		1036-040-113		1019-040-113	
SM155	136-032-145		119-032-145		1036-032-145		1019-324-145	
SM157	136-032-113		119-032-113		1036-032-113		1019-032-113	

*** CONTINUED ***

** CONTINUED **
TABLE AE-1
TRM NCT LINKS FROM CM2 TO LSCIT,LSCIM,LGX HOST

DUAL FABRIC (ODD SM)								
G7 CM2 TO LSCIT /M OR LGX	JL25	JL27	JL29	JL31	JL26	JL28	JL30	JL32

CM2 PORTS (982TH CONN)								
ODD SM NBR	CM2 '0' SIDE				CM2 '1' SIDE			
	REC 1 A	XMT 1 C	REC 1 A	XMT 1 C	REC 1 A	XMT 1 C	REC 1 A	XMT 1 C
SM159	036-088-145		019-088-145		1136-088-145		1119-088-145	
SM161	036-088-113		019-088-113		1136-088-113		1119-088-113	
SM163	036-080-145		019-080-145		1136-080-145		1119-080-145	
SM165	036-080-113		019-080-113		1136-080-113		1119-080-113	
SM167	036-072-145		019-072-145		1136-072-145		1119-072-145	
SM169	036-072-113		019-072-113		1136-072-113		1119-072-113	
SM171	036-064-145		019-064-145		1136-064-145		1119-064-145	
SM173	036-064-113		019-064-113		1136-064-113		1119-064-113	
SM175	036-056-145		019-056-145		1136-056-145		1119-056-145	
SM177	036-056-113		019-056-113		1136-056-113		1119-056-113	
SM179	036-048-145		019-048-145		1136-048-145		1119-048-145	
SM181	036-048-113		019-048-113		1136-048-113		1119-048-113	
SM183	036-040-145		019-040-145		1136-040-145		1119-040-145	
SM185	036-040-113		019-040-113		1136-040-113		1119-040-113	
SM187	036-032-145		019-032-145		1136-032-145		1119-032-145	
SM189	036-032-113		019-032-113		1136-032-113		1119-032-113	

TABLE AE-2
TRM NCT LINKS FROM CM2 TO LSCIM,LSCIT OR LGX HOST

DUAL FABRIC (EVEN SM)								
G7 CM2 TO LSCIT /M OR LGX	JL25	JL27	JL29	JL31	JL26	JL28	JL30	JL32

CM2 PORTS (982TH CONN)								
EVEN SM NBR	CM2 '0' SIDE				CM2 '1' SIDE			
	REC 2 B	XMT 2 D	REC 2 B	XMT 2 D	REC 2 B	XMT 2 D	REC 2 B	XMT 2 D
SM2	536-088-145		519-088-145		636-088-145		619-088-145	
SM4	536-080-145		519-080-145		636-080-145		619-080-145	
SM6	536-080-113		519-080-113		636-080-113		619-080-113	
SM8	536-072-145		519-072-145		636-072-145		619-072-145	

*** CONTINUED ***

** CONTINUED **
TABLE AE-2
TRM NCT LINKS FROM CM2 TO LSCIM,LSCIT OR LGX HOST

DUAL FABRIC (EVEN SM)								
G7 CM2 TO LSCIT /M OR LGX	JL25	JL27	JL29	JL31	JL26	JL28	JL30	JL32

CM2 PORTS (982TH CONN)								
EVEN SM NBR	CM2 '0' SIDE				CM2 '1' SIDE			
	REC 2 B	XMT 2 D	REC 2 B	XMT 2 D	REC 2 B	XMT 2 D	REC 2 B	XMT 2 D
SM10	536-072-113		519-072-113		636-072-113		619-072-113	
SM12	536-064-145		519-064-145		636-064-145		619-064-145	
SM14	536-064-113		519-064-113		636-064-113		619-064-113	
SM16	536-056-145		519-056-145		636-056-145		619-056-145	
SM18	536-056-113		519-056-113		636-056-113		619-056-113	
SM20	536-048-145		519-048-145		636-048-145		619-048-145	
SM22	536-048-113		519-048-113		636-048-113		619-048-113	
SM24	536-040-145		519-040-145		636-040-145		619-040-145	
SM26	536-040-113		519-040-113		636-040-113		619-040-113	
SM28	536-032-145		519-032-145		636-032-145		619-032-145	
SM30	536-032-113		519-032-113		636-032-113		619-032-113	
SM32	436-088-145		419-088-145		736-088-145		719-088-145	
SM34	436-088-113		419-088-113		736-088-113		719-088-113	
SM36	436-080-145		419-080-145		736-080-145		719-080-145	
SM38	436-080-113		419-080-113		736-080-113		719-080-113	
SM40	436-072-145		419-072-145		736-072-145		719-072-145	
SM42	436-072-113		419-072-113		736-072-113		719-072-113	
SM44	436-064-145		419-064-145		736-064-145		719-064-145	
SM46	436-064-113		419-064-113		736-064-113		719-064-113	
SM48	436-056-145		419-056-145		736-056-145		719-056-145	
SM50	436-056-113		419-056-113		736-056-113		719-056-113	
SM52	436-048-145		419-048-145		736-048-145		719-048-145	
SM54	436-048-113		419-048-113		736-048-113		719-048-113	
SM56	436-040-145		419-040-145		736-040-145		719-040-145	
SM58	436-040-113		419-040-113		736-040-113		719-040-113	
SM60	436-032-145		419-032-145		736-032-145		719-032-145	
SM62	436-032-113		419-032-113		736-032-113		719-032-113	
SM64	336-088-145		319-088-145		836-088-145		819-088-145	
SM66	336-088-113		319-088-113		836-088-113		819-088-113	
SM68	336-080-145		319-080-145		836-080-145		819-080-145	
SM70	336-080-113		319-080-113		836-080-113		819-080-113	

*** CONTINUED ***

** CONTINUED **
TABLE AE-2
TRM NCT LINKS FROM CM2 TO LSCIM,LSCIT OR LGX HOST

DUAL FABRIC (EVEN SM)								
G7 CM2 TO LSCIT /M OR LGX	JL25	JL27	JL29	JL31	JL26	JL28	JL30	JL32

CM2 PORTS (982TH CONN)								
EVEN SM NBR	CM2 '0' SIDE				CM2 '1' SIDE			
	REC 2 B	XMT 2 D	REC 2 B	XMT 2 D	REC 2 B	XMT 2 D	REC 2 B	XMT 2 D
SM72	336-072-145		319-072-145		836-072-145		819-072-145	
SM74	336-072-113		319-072-113		836-072-113		819-072-113	
SM76	336-064-145		319-064-145		836-064-145		819-064-145	
SM78	336-064-113		319-064-113		836-064-113		819-064-113	
SM80	336-056-145		319-056-145		836-056-145		819-056-145	
SM82	336-056-113		319-056-113		836-056-113		819-056-113	
SM84	336-048-145		319-048-145		836-048-145		819-048-145	
SM86	336-048-113		319-048-113		836-048-113		819-048-113	
SM88	336-040-145		319-040-145		836-040-145		819-040-145	
SM90	336-040-113		319-040-113		836-040-113		819-040-113	
SM92	336-032-145		319-032-145		836-032-145		819-032-145	
SM94	336-032-113		319-032-113		836-032-113		819-032-113	
SM96	236-088-145		219-088-145		936-088-145		919-088-145	
SM98	236-088-113		219-088-113		936-088-113		919-088-113	
SM100	236-080-145		219-080-145		936-080-145		919-080-145	
SM102	236-080-113		219-080-113		936-080-113		919-080-113	
SM104	236-072-145		219-072-145		936-072-145		919-072-145	
SM106	236-072-113		219-072-113		936-072-113		919-072-113	
SM108	236-064-145		219-064-145		936-064-145		919-064-145	
SM110	236-064-113		219-064-113		936-064-113		919-064-113	
SM112	236-056-145		219-056-145		936-056-145		919-056-145	
SM114	236-056-113		219-056-113		936-056-113		919-056-113	
SM116	236-048-145		219-048-145		936-048-145		919-048-145	
SM118	236-048-113		219-048-113		936-048-113		919-048-113	
SM120	236-040-145		219-040-145		936-040-145		919-040-145	
SM122	226-040-113		219-040-113		936-040-113		919-040-113	
SM124	236-032-145		219-032-145		936-032-145		919-032-145	
SM126	236-032-113		219-032-113		936-032-113		919-032-113	
SM128	136-088-145		119-088-145		1036-088-145		1019-088-145	
SM130	136-088-113		119-088-113		1036-088-113		1019-088-113	

*** CONTINUED ***

COPYRIGHT @ 2001 LUCENT TECHNOLOGIES
ALL RIGHTS RESERVED

BT13

INTERCABINET CABLING
FOR
5ESS * SWITCH
*LUCENT TRADEMARK

DWG SIZE C2 | ISSUE 117

PRINTED IN U.S.A.

** CONTINUED **
TABLE AE-2

TRM NCT LINKS FROM CM2 TO LSCIM,LSCIT OR LGX HOST

DUAL FABRIC (EVEN SM)								
G7 CM2 TO LSCIT /M OR LGX	JL25	JL27	JL29	JL31	JL26	JL28	JL30	JL32

CM2 PORTS (982TH CONN)								
EVEN SM NBR	CM2 '0' SIDE				CM2 '1' SIDE			
	REC 2 B	XMT 2 D	REC 2 B	XMT 2 D	REC 2 B	XMT 2 D	REC 2 B	XMT 2 D
SM132	136-080-145		119-080-145		1036-080-145		1019-088-145	
SM134	136-080-113		119-080-113		1036-080-113		1019-088-113	
SM136	136-072-145		119-072-145		1036-072-145		1019-072-145	
SM138	136-072-113		119-072-113		1036-072-113		1019-072-113	
SM140	136-064-145		119-064-145		1036-064-145		1019-064-145	
SM142	136-064-113		119-064-113		1036-064-113		1019-064-113	
SM144	136-056-145		119-056-145		1036-056-145		1019-056-145	
SM146	136-056-113		119-056-113		1036-056-113		1019-056-113	
SM148	136-048-145		119-048-145		1036-048-145		1019-048-145	
SM150	136-048-113		119-048-113		1036-048-113		1019-048-113	
SM152	136-040-145		119-040-145		1036-040-145		1019-048-145	
SM154	136-040-113		119-040-113		1036-040-113		1019-040-113	
SM156	136-032-145		119-032-145		1036-032-145		1019-032-145	
SM158	136-032-113		119-032-113		1036-032-113		1019-032-113	
SM160	036-088-145		019-088-145		1136-088-145		1119-088-145	
SM162	036-088-113		019-088-113		1136-088-113		1119-088-113	
SM164	036-080-145		019-080-145		1136-080-145		1119-080-145	
SM166	036-080-113		019-080-113		1136-080-113		1119-080-113	
SM168	036-072-145		019-072-145		1136-072-145		1119-072-145	
SM170	036-072-113		019-072-113		1136-072-113		1119-072-113	
SM172	036-064-145		019-064-145		1136-064-145		1119-064-145	
SM174	036-064-113		019-064-113		1136-064-113		1119-064-113	
SM176	036-056-145		019-056-145		1136-056-145		1119-056-145	
SM178	036-056-113		019-056-113		1136-056-145		1119-056-113	
SM180	036-048-145		019-048-145		1136-048-145		1119-048-145	
SM182	036-048-113		019-048-113		1136-048-113		1119-048-113	
SM184	036-040-145		019-040-145		1136-040-145		1119-040-145	
SM186	036-040-113		019-040-113		1136-040-113		1119-040-113	
SM188	036-032-145		019-032-145		1136-032-145		1119-032-145	
SM190	036-032-113		019-032-113		1136-032-113		1119-032-113	

TABLE BA

CABLE MEASUREMENTS											
LENGTH OF CABLE, INCLUDING CONNECTION INCREMENTS, FROM CABLE RACK TO FARTHEST COMPONENT TO WHICH THE CABLE CONNECTS											
CABLE DESIG	CA RACK DROP POS	CA RACK DROP LENGTH	PAL'ZD DROP LENGTH	FR POS	EQL	CABLE DESIG	CA RACK DROP POS	CA RACK DROP LENGTH	PAL'ZD DROP LENGTH	FR POS	EQL
JR101 JR103 JR103B	L	9-3	4-5	0	11-180-117		L	6-9	2-8	0	11
		8-5	5-2	1	19-180-117	JR301 OR		6-0	3-5	1	19
		7-7	5-11	2	28-180-117	JR301A OR		5-3	4-2	2	28
		6-9	6-7	3	36-180-117	JR301B OR		4-7	4-10	3	36
		5-11	7-4	4	45-180-117	JR301C		3-10	5-7	4	45
		5-1	8-0	5	53-180-117			3-2	6-3	5	53
		4-4	8-9	6	62-180-117			2-5	7-0	6	62
		8-11	4-4	0	11-032-104			6-11	2-6	0	11
JR102 JR104 JR104B	R	8-1	5-1	1	19-032-104	JR303 OR	L	6-2	3-3	1	19
		7-3	5-10	2	28-032-104	JR303A OR		5-5	4-0	2	28
		6-5	6-6	3	36-032-104	JR303B OR		4-9	4-8	3	36
		5-7	7-3	4	45-032-104	JR303C		4-0	5-5	4	45
		4-9	7-11	5	53-032-104			3-4	6-1	5	53
		4-0	8-8	6	62-032-104			2-7	6-10	6	62
		8-5	3-8	0	11-108-109			8-1	3-4	0	11-108-109
JR33	L	7-7	4-5	1	19-108-109	JR34	R	7-3	4-1	1	19-108-109
		6-9	5-2	2	28-108-109			6-5	4-10	2	28-108-109
		5-11	5-10	3	36-108-109			5-7	5-6	3	36-108-109
		5-1	6-7	4	45-108-109			4-9	6-3	4	45-108-109
		4-4	7-3	5	53-108-109			4	6-11	5	53-108-109
		3-5	8-0	6	62-108-109			3-1	7-8	6	62-108-109
JR105 OR JR107	L	6-9		1	16-085-0B0	JR106 OR JR108	R	6-9		1	16-106-0B0
		6-0		2	25-085-0B0			6-0		2	25-106-0B0
		5-4		3	33-085-0B0			5-4		3	33-106-0B0
		4-7		4	42-085-0B0			4-7		4	42-106-0B0
		3-11		5	50-085-0B0			3-11		5	50-106-0B0
		3-2		6	59-085-0B0			3-2		6	59-106-0B0
		6-8	2-8	0	11			6-8	2-8	0	11
JR331	L	5-10	3-5	1	19	JR335	L	5-10	3-5	1	19
		5-1	4-2	2	28			5-1	4-2	2	28
		4-5	4-10	3	36			4-5	4-10	3	36
		3-8	5-7	4	45			3-8	5-7	4	45
		3-0	6-3	5	53			3-0	6-3	5	53
		2-3	7-0	6	62			2-3	7-0	6	62
		6-9	2-6	0	11			6-9	2-6	0	11

*** CONTINUED ***

** CONTINUED **
TABLE BA

CABLE MEASUREMENTS											
LENGTH OF CABLE, INCLUDING CONNECTION INCREMENTS, FROM CABLE RACK TO FARTHEST COMPONENT TO WHICH THE CABLE CONNECTS											
CABLE DESIG	CA RACK DROP POS	CA RACK DROP LENGTH	PAL'ZD DROP LENGTH	FR POS	EQL	CABLE DESIG	CA RACK DROP POS	CA RACK DROP LENGTH	PAL'ZD DROP LENGTH	FR POS	EQL
JR333	L	6-0	3-3	1	19	JR337	L	6-0	3-3	1	19
		5-3	4-0	2	28			5-3	4-0	2	28
		4-7	4-8	3	36			4-7	4-8	3	36
		3-10	5-5	4	45			3-10	5-5	4	45
		3-2	6-1	5	53			3-2	6-1	5	53
		2-5	6-10	6	62			2-5	6-10	6	62

TABLE BA1

CABLE MEASUREMENTS						
LENGTH OF CABLE, INCLUKING CONNECTING INCREMENTS, FROM CABLE RACK OR PALLET TO FARTHEST COMPONENT TO WHICH CABLE CONNECTS						
ED-5D500-21 GROUP	CABLE DESIG	POS	CA RACK DROP LENGTH	PAL'ZD DROP LENGTH	CAB POS	EQL
129	JR111	L	8-0	4-3	0	11-180-117
			7-3	5-0	1	19-180-117
			6-6	5-9	2	28-180-117
			5-10	6-5	3	36-180-117
			5-1	7-2	4	45-180-117
			4-5	7-10	5	53-180-117
			3-8	8-7	6	62-180-117
	JR112	R	7-4	3-7	0	11-080-104
			6-7	4-4	1	19-080-104
			5-10	5-1	2	28-080-104
			5-2	5-9	3	36-080-104
			4-5	6-6	4	45-080-104
			3-9	7-2	5	53-080-104
			3-0	7-11	6	62-080-104

TABLE BA2

STAMPING TABLE AND CABLE MEASUREMENTS						
LENGTH OF CABLE, INCLUDING CONNECTING INCREMENTS, FROM CABLE RACK OR PALLET TO FARTHEST COMPONENT TO WHICH CABLE CONNECTS						
ED5D500-21 GROUP	CABLE DESIG	POS	CA RACK DROP LENGTH	PAL'ZD DROP LENGTH	CAB POS	EQL
129A	JR113	L	6-5	2-8	0	( )11-032-117

*** CONTINUED ***

COPYRIGHT @ 2001 LUCENT TECHNOLOGIES
ALL RIGHTS RESERVED

BT13

INTERCABINET CABLING
FOR
5ESS * SWITCH
*LUCENT TRADEMARK

DWG SIZE C2 | ISSUE 117

LUCENT TECHNOLOGIES INC | ED5D500-21 | SHEET D33 OF 292

PRINTED IN U.S.A.

** CONTINUED **
TABLE BA2

STAMPING TABLE AND CABLE MEASUREMENTS

LENGTH OF CABLE, INCLUDING CONNECTING INCREMENTS, FROM CABLE RACK OR PALLET TO FARTHEST COMPONENT TO WHICH CABLE CONNECTS

ED5D500-21 GROUP	CABLE DESIG	POS	CA RACK DROP LENGTH	PAL'ZD DROP LENGTH	CAB POS	EQL
			6-6	2-9		( )11-040-117
			6-7	2-10		( )11-048-117
			6-8	2-11		( )11-056-117
			6-9	3-0		( )11-064-117
		R	6-9	3-0		( )11-124-117
			6-8	2-11		( )11-132-117
			6-7	2-10		( )11-140-117
			6-6	2-9		( )11-148-117
			6-5	2-8		( )11-156-117
		L	5-8	3-5	1	( )19-032-117
			5-9	3-6		( )19-040-117
			5-10	3-7		( )19-048-117
			5-11	3-8		( )19-056-117
			6-0	3-9		( )19-064-117
		R	6-0	3-9		( )19-124-117
			5-11	3-8		( )19-132-117
			5-10	3-7		( )19-140-117
			5-9	3-6		( )19-148-117
			5-8	3-5		( )19-156-117
		L	4-11	4-2	2	( )28-032-117
			5-0	4-3		( )28-040-117
			5-1	4-4		( )28-048-117
			5-2	4-5		( )28-056-117
			5-3	4-6		( )28-064-117
		R	5-3	4-6		( )28-124-117
			5-2	4-5		( )28-132-117
			5-1	4-4		( )28-140-117
			5-0	4-3		( )28-148-117
			4-11	4-2		( )28-156-117
		L	4-3	4-10	3	( )36-032-117
			4-4	4-11		( )36-040-117
			4-5	5-0		( )36-048-117
			4-6	5-1		( )36-056-117
			4-7	5-2		( )36-064-117
		R	4-7	5-2		( )36-124-117

*** CONTINUED ***

** CONTINUED **
TABLE BA2

STAMPING TABLE AND CABLE MEASUREMENTS

LENGTH OF CABLE, INCLUDING CONNECTING INCREMENTS, FROM CABLE RACK OR PALLET TO FARTHEST COMPONENT TO WHICH CABLE CONNECTS

ED5D500-21 GROUP	CABLE DESIG	POS	CA RACK DROP LENGTH	PAL'ZD DROP LENGTH	CAB POS	EQL
			4-6	5-1		( )36-132-117
			4-5	5-0		( )36-140-117
			4-4	4-11		( )36-148-117
			4-3	4-10		( )36-156-117
		L	3-6	5-7	4	( )45-032-117
			3-7	5-8		( )45-040-117
			3-8	5-9		( )45-048-117
			3-9	5-10		( )45-056-117
			3-10	5-11		( )45-064-117
		R	3-10	5-11		( )45-124-117
			3-9	5-10		( )45-132-117
			3-8	5-9		( )45-140-117
			3-7	5-8		( )45-148-117
			3-6	5-7		( )45-156-117
		L	2-10	6-3	5	( )53-032-117
			2-11	6-4		( )53-040-117
			3-0	6-5		( )53-048-117
			3-1	6-6		( )53-056-117
			3-2	6-7		( )53-064-117
		R	3-2	6-7		( )53-124-117
			3-1	6-6		( )53-132-117
			3-0	6-5		( )53-140-117
			2-11	6-4		( )53-148-117
			2-10	6-3		( )53-156-117
		L	2-1	7-0	6	( )62-032-117
			2-2	7-1		( )62-040-117
			2-3	7-2		( )62-048-117
			2-4	7-3		( )62-056-117
			2-5	7-4		( )62-064-117
		R	2-5	7-4		( )62-124-117
			2-4	7-3		( )62-132-117
			2-3	7-2		( )62-140-117
			2-2	7-1		( )62-148-117
			2-1	7-0		( )62-156-117

TABLE BA3

STAMPING TABLE AND CABLE MEASUREMENTS

LENGTH OF CABLE, INCLUDING CONNECTING INCREMENTS, FROM CABLE RACK OR PALLET TO FARTHEST COMPONENT TO WHICH CABLE CONNECTS

ED-5D500-21 GROUP	CABLE DESIG	POS	CA RACK DROP LENGTH	PAL'ZD DROP LENGTH	CAB POS	EQL
129B	JR114	L	6-7	2-10	0	( )11-032-104
			6-8	2-11		( )11-040-104
			6-9	3-0		( )11-048-104
			6-10	3-1		( )11-056-104
			6-11	3-2		( )11-064-104
		R	6-11	3-2		( )11-124-104
			6-10	3-1		( )11-132-104
			6-9	3-0		( )11-140-140
			6-8	2-11		( )11-148-104
			6-7	2-10		( )11-156-104
		L	5-10	3-7	1	( )19-032-104
			5-11	3-8		( )19-040-104
			6-0	3-9		( )19-048-104
			6-1	3-10		( )19-056-104
			6-2	3-11		( )19-064-104
		R	6-2	3-11		( )19-124-104
			6-1	3-10		( )19-132-104
			6-0	3-9		( )19-140-104
			5-11	3-8		( )19-148-104
			5-10	3-7		( )19-156-104
		L	5-1	4-4	2	( )28-032-104
			5-2	4-5		( )28-040-104
			5-3	4-6		( )28-048-104
			5-4	4-7		( )28-056-104
			5-5	4-8		( )28-064-104
		R	5-5	4-8		( )28-124-104
			5-4	4-7		( )28-132-104
			5-3	4-6		( )28-140-104
			5-2	4-5		( )28-148-104
			5-1	4-4		( )28-156-104
		L	4-5	5-0	3	( )36-032-104
			4-6	5-1		( )36-040-104
			4-7	5-2		( )36-048-104
			4-8	5-3		( )36-056-104
			4-9	5-4		( )36-064-104

*** CONTINUED ***

COPYRIGHT @ 2001 LUCENT TECHNOLOGIES
ALL RIGHTS RESERVED

BT13

INTERCABINET CABLING
FOR
5ESS * SWITCH
*LUCENT TRADEMARK

DWG SIZE C2 | ISSUE 117

LUCENT TECHNOLOGIES INC | ED5D500-21 | SHEET D34 OF 292

PRINTED IN U.S.A.

** CONTINUED **
TABLE BA3

STAMPING TABLE AND CABLE MEASUREMENTS

LENGTH OF CABLE, INCLUDING CONNECTING INCREMENTS, FROM CABLE RACK OR PALLET TO FARTHEST COMPONENT TO WHICH CABLE CONNECTS

ED-5D500-21 GROUP	CABLE DESIG	POS	CA RACK DROP LENGTH	PAL'ZD DROP LENGTH	CAB POS	EQL
		R	4-9	5-4		( )36-124-104
			4-8	5-3		( )36-132-104
			4-7	5-2		( )36-140-104
			4-6	5-1		( )36-148-104
			4-5	5-0		( )36-156-104
		L	3-8	5-9	4	( )45-032-104
			3-9	5-10		( )45-040-104
			3-10	5-11		( )45-048-104
			3-11	6-0		( )45-056-104
			4-0	6-1		( )45-064-104
		R	4-0	6-1		( )45-124-104
			3-11	6-0		( )45-132-104
			3-10	5-11		( )45-140-104
			3-9	5-10		( )45-148-104
			3-8	5-9		( )45-156-104
		L	3-0	6-5	5	( )53-032-104
			3-1	6-6		( )53-040-104
			3-2	6-7		( )53-048-104
			3-3	6-8		( )53-056-104
			3-4	6-9		( )53-064-104
		R	3-4	6-9		( )53-124-104
			3-3	6-8		( )53-132-104
			3-2	6-7		( )53-140-104
			3-1	6-6		( )53-148-104
			3-0	6-5		( )53-156-104
		L	2-3	7-2	6	( )62-032-104
			2-4	7-3		( )62-040-104
			2-5	7-4		( )62-048-104
			2-6	7-5		( )62-056-104
			2-7	7-6		( )62-064-104
		R	2-7	7-6		( )62-124-104
			2-6	7-5		( )62-132-104
			2-5	7-4		( )62-140-104
			2-4	7-3		( )62-148-104

*** CONTINUED ***

** CONTINUED **
TABLE BA3

STAMPING TABLE AND CABLE MEASUREMENTS

LENGTH OF CABLE, INCLUDING CONNECTING INCREMENTS, FROM CABLE RACK OR PALLET TO FARTHEST COMPONENT TO WHICH CABLE CONNECTS

ED-5D500-21 GROUP	CABLE DESIG	POS	CA RACK DROP LENGTH	PAL'ZD DROP LENGTH	CAB POS	EQL
			2-3	7-2		( )62-156-104

TABLE BA4

STAMPING TABLE AND CABLE MEASUREMENTS

LENGTH OF CABLE, INCLUDING CONNECTING INCREMENTS, FROM CABLE RACK OR PALLET TO FARTHEST COMPONENT TO WHICH CABLE CONNECTS

ED-5D500-21 GROUP	CABLE DESIG	POS	CA RACK DROP LENGTH	PAL'ZD DROP LENGTH	CAB POS	EQL
G122A ATU-E SN560 (TLTT)	JR33A	L	6-9	2-7	0	( )11-032-103
			6-10	2-8		( )11-040-103
			6-11	2-9		( )11-048-103
			7-0	2-10		( )11-056-103
			7-1	2-11		( )11-064-103
			7-2	3-0		( )11-072-103
			7-3	3-1		( )11-080-103
			7-4	3-2		( )11-088-103
			7-9	3-7		( )11-124-103
			7-10	3-8		( )11-132-103
			7-11	3-9		( )11-140-103
			8-0	3-10		( )11-148-103
			8-1	3-11		( )11-156-103
			8-2	4-0		( )11-164-103
			8-3	4-1		( )11-172-103
			8-4	4-2		( )11-180-103
		L	6-0	3-4	1	( )19-032-103
			6-1	3-5		( )19-040-103
			6-2	3-6		( )19-048-103
			6-3	3-7		( )19-056-103
			6-4	3-8		( )19-064-103
			6-5	3-9		( )19-072-103
			6-6	3-10		( )19-080-103
			6-7	3-11		( )19-088-103
			7-0	4-4		( )19-124-103
			7-1	4-5		( )19-132-103
			7-2	4-6		( )19-140-103

*** CONTINUED ***

** CONTINUED **
TABLE BA4

STAMPING TABLE AND CABLE MEASUREMENTS

LENGTH OF CABLE, INCLUDING CONNECTING INCREMENTS, FROM CABLE RACK OR PALLET TO FARTHEST COMPONENT TO WHICH CABLE CONNECTS

ED-5D500-21 GROUP	CABLE DESIG	POS	CA RACK DROP LENGTH	PAL'ZD DROP LENGTH	CAB POS	EQL
			7-3	4-7		( )19-148-103
			7-4	4-8		( )19-156-103
			7-5	4-9		( )19-164-103
			7-6	4-10		( )19-172-103
			7-7	4-11		( )19-180-103
			5-3	4-0	2	( )28-032-103
			5-4	4-1		( )28-040-103
			5-5	4-2		( )28-048-103
			5-6	4-3		( )28-056-103
			5-7	4-4		( )28-064-103
			5-8	4-5		( )28-072-103
			5-9	4-6		( )28-080-103
			5-10	4-7		( )28-088-103
			6-3	5-0		( )28-124-103
			6-4	5-1		( )28-132-103
			6-5	5-2		( )28-140-103
			6-6	5-3		( )28-148-103
			6-7	5-4		( )28-156-103
			6-8	5-5		( )28-164-103
			6-9	5-6		( )28-172-103
			6-10	5-7		( )28-180-103
			4-7	4-9	3	( )36-032-103
			4-8	4-10		( )36-040-103
			4-9	4-11		( )36-048-103
			4-10	5-0		( )36-056-103
			4-11	5-1		( )36-064-103
			5-0	5-2		( )36-072-103
			5-1	5-3		( )36-080-103
			5-2	5-4		( )36-088-103
			5-7	5-9		( )36-124-103
			5-8	5-10		( )36-132-103
			5-9	5-11		( )36-140-103
			5-10	6-0		( )36-148-103
			5-11	6-1		( )36-156-103
			6-0	6-2		( )36-164-103

*** CONTINUED ***

COPYRIGHT @ 2001 LUCENT TECHNOLOGIES
ALL RIGHTS RESERVED

BT13

INTERCABINET CABLING
FOR
5ESS * SWITCH
*LUCENT TRADEMARK

DWG SIZE C2 | ISSUE 117

LUCENT TECHNOLOGIES INC | ED5D500-21 | SHEET D35 OF 292

PRINTED IN U.S.A.

** CONTINUED **
TABLE BA4

STAMPING TABLE AND CABLE MEASUREMENTS

LENGTH OF CABLE, INCLUDING CONNECTING INCREMENTS, FROM CABLE RACK OR PALLET TO FARTHEST COMPONENT TO WHICH CABLE CONNECTS

ED-5D500-21 GROUP	CABLE DESIG	POS	CA RACK DROP LENGTH	PAL'ZD DROP LENGTH	CAB POS	EQL
			6-1	6-3		( )36-172-103
			6-2	6-4		( )36-180-103
			3-10	5-5	4	( )45-032-103
			3-11	5-6		( )45-040-103
			4-0	5-7		( )45-048-103
			4-1	5-8		( )45-056-103
			4-2	5-9		( )45-064-103
			4-3	5-10		( )45-072-103
			4-4	5-11		( )45-080-103
			4-5	6-0		( )45-088-103
			4-10	6-5		( )45-124-103
			4-11	6-6		( )45-132-103
			5-0	6-7		( )45-140-103
			5-1	6-8		( )45-148-103
			5-2	6-9		( )45-156-103
			5-3	6-10		( )45-164-103
			5-4	6-11		( )45-172-103
			5-5	7-0		( )45-180-103
			3-2	6-2	5	( )53-032-103
			3-3	6-3		( )53-040-103
			3-4	6-4		( )53-048-103
			3-5	6-5		( )53-056-103
			3-6	6-6		( )53-064-103
			3-7	6-7		( )53-072-103
			3-8	6-8		( )53-080-103
			3-9	6-9		( )53-088-103
			4-2	7-2		( )53-124-103
			4-3	7-3		( )53-132-103
			4-4	7-4		( )53-140-103
			4-5	7-5		( )53-148-103
			4-6	7-6		( )53-156-103
			4-7	7-7		( )53-164-103
			4-8	7-8		( )53-172-103
			4-9	7-9		( )53-180-103

*** CONTINUED ***

** CONTINUED **
TABLE BA4

STAMPING TABLE AND CABLE MEASUREMENTS

LENGTH OF CABLE, INCLUDING CONNECTING INCREMENTS, FROM CABLE RACK OR PALLET TO FARTHEST COMPONENT TO WHICH CABLE CONNECTS

ED-5D500-21 GROUP	CABLE DESIG	POS	CA RACK DROP LENGTH	PAL'ZD DROP LENGTH	CAB POS	EQL
			2-5	6-10	6	( )62-032-103
			2-6	6-11		( )62-040-103
			2-7	7-0		( )62-048-103
			2-8	7-1		( )62-056-103
			2-9	7-2		( )62-064-103
			2-10	7-3		( )62-072-103
			2-11	7-4		( )62-080-103
			3-0	7-5		( )62-088-103
			3-5	7-10		( )62-124-103
			3-6	7-11		( )62-132-103
			3-7	8-0		( )62-140-103
			3-8	8-1		( )62-148-103
			3-9	8-2		( )62-156-103
			3-10	8-3		( )62-164-103
			3-11	8-4		( )62-172-103
			4-0	8-5		( )62-180-103
G123A ATU-E SN560 (TLTT)	JR34A	R	8-1	3-11	0	( )11-032-103
			8-0	3-10		( )11-040-103
			7-11	3-9		( )11-048-103
			7-10	3-8		( )11-056-103
			7-9	3-7		( )11-064-103
			7-8	3-6		( )11-072-103
			7-7	3-5		( )11-080-103
			7-6	3-4		( )11-088-103
			7-1	2-11		( )11-124-103
			7-0	2-10		( )11-132-103
			6-11	2-9		( )11-140-103
			6-10	2-8		( )11-148-103
			6-9	2-7		( )11-156-103
			6-8	2-6		( )11-164-103
			6-7	2-5		( )11-172-103
			6-6	2-4		( )11-180-103
			7-4	4-8	1	( )19-032-103
			7-3	4-7		( )19-040-103

*** CONTINUED ***

** CONTINUED **
TABLE BA4

STAMPING TABLE AND CABLE MEASUREMENTS

LENGTH OF CABLE, INCLUDING CONNECTING INCREMENTS, FROM CABLE RACK OR PALLET TO FARTHEST COMPONENT TO WHICH CABLE CONNECTS

ED-5D500-21 GROUP	CABLE DESIG	POS	CA RACK DROP LENGTH	PAL'ZD DROP LENGTH	CAB POS	EQL
			7-2	4-6		( )19-048-103
			7-1	4-5		( )19-056-103
			7-0	4-4		( )19-064-103
			6-11	4-3		( )19-072-103
			6-10	4-2		( )19-080-103
			6-9	4-1		( )19-088-103
			6-4	3-8		( )19-124-103
			6-3	3-7		( )19-132-103
			6-2	3-6		( )19-140-103
			6-1	3-5		( )19-148-103
			6-0	3-4		( )19-156-103
			5-11	3-3		( )19-164-103
			5-10	3-2		( )19-172-103
			5-9	3-1		( )19-180-103
			6-7	5-4	2	( )28-032-103
			6-6	5-3		( )28-040-103
			6-5	5-2		( )28-048-103
			6-4	5-1		( )28-056-103
			6-3	5-0		( )28-064-103
			6-2	4-11		( )28-072-103
			6-1	4-10		( )28-080-103
			6-0	4-9		( )28-088-103
			5-7	4-4		( )28-124-103
			5-6	4-3		( )28-132-103
			5-5	4-2		( )28-140-103
			5-4	4-1		( )28-148-103
			5-3	4-0		( )28-156-103
			5-2	3-11		( )28-164-103
			5-1	3-10		( )28-172-103
			5-0	3-9		( )28-180-103
			5-11	6-1	3	( )36-032-103
			5-10	6-0		( )36-040-103
			5-9	5-11		( )36-048-103
			5-8	5-10		( )36-056-103
			5-7	5-9		( )36-064-103

*** CONTINUED ***

COPYRIGHT @ 2001 LUCENT TECHNOLOGIES
ALL RIGHTS RESERVED

BT13

INTERCABINET CABLING
FOR
5ESS * SWITCH
*LUCENT TRADEMARK

DWG SIZE C2 | ISSUE 117

LUCENT TECHNOLOGIES INC | ED5D500-21 | SHEET D36 OF 292

PRINTED IN U.S.A.

** CONTINUED **
TABLE BA4

STAMPING TABLE AND CABLE MEASUREMENTS

LENGTH OF CABLE, INCLUDING CONNECTING INCREMENTS, FROM CABLE RACK OR PALLET TO FARTHEST COMPONENT TO WHICH CABLE CONNECTS

ED-5D500-21 GROUP	CABLE DESIG	POS	CA RACK DROP LENGTH	PAL'ZD DROP LENGTH	CAB POS	EQL
			5-6	5-8		( )36-072-103
			5-5	5-7		( )36-080-103
			5-4	5-6		( )36-088-103
			4-11	5-1		( )36-124-103
			4-10	5-0		( )36-132-103
			4-9	4-11		( )36-140-103
			4-8	4-10		( )36-148-103
			4-7	4-9		( )36-156-103
			4-6	4-8		( )36-164-103
			4-5	4-7		( )36-172-103
			4-4	4-6		( )36-180-103
			5-2	6-9	4	( )45-032-103
			5-1	6-8		( )45-040-103
			5-0	6-7		( )45-048-103
			4-11	6-6		( )45-056-103
			4-10	6-5		( )45-064-103
			4-9	6-4		( )45-072-103
			4-8	6-3		( )45-080-103
			4-7	6-2		( )45-088-103
			4-2	5-9		( )45-124-103
			4-1	5-8		( )45-132-103
			4-0	5-7		( )45-140-103
			3-11	5-6		( )45-148-103
			3-10	5-5		( )45-156-103
			3-9	5-4		( )45-164-103
			3-8	5-3		( )45-172-103
			3-7	5-2		( )45-180-103
			4-6	7-6	5	( )53-032-103
			4-5	7-5		( )53-040-103
			4-4	7-4		( )53-048-103
			4-3	7-3		( )53-056-103
			4-2	7-2		( )53-064-103
			4-1	7-1		( )53-072-103
			4-0	7-7		( )53-080-103

*** CONTINUED ***

** CONTINUED **
TABLE BA4

STAMPING TABLE AND CABLE MEASUREMENTS

LENGTH OF CABLE, INCLUDING CONNECTING INCREMENTS, FROM CABLE RACK OR PALLET TO FARTHEST COMPONENT TO WHICH CABLE CONNECTS

ED-5D500-21 GROUP	CABLE DESIG	POS	CA RACK DROP LENGTH	PAL'ZD DROP LENGTH	CAB POS	EQL
			3-11	6-11		( )53-088-103
			3-6	6-6		( )53-124-103
			3-5	6-5		( )53-132-103
			3-4	6-4		( )53-140-103
			3-3	6-3		( )53-148-103
			3-2	6-2		( )53-156-103
			3-1	6-1		( )53-164-103
			3-0	6-0		( )53-172-103
			2-11	5-11		( )53-180-103
			3-9	8-2	6	( )62-032-103
			3-8	8-1		( )62-040-103
			3-7	8-0		( )62-048-103
			3-6	7-11		( )62-056-103
			3-5	7-10		( )62-064-103
			3-4	7-9		( )62-072-103
			3-3	7-8		( )62-080-103
			3-2	7-7		( )62-088-103
			2-9	7-2		( )62-124-103
			2-8	7-1		( )62-132-103
			2-7	7-0		( )62-140-103
			2-6	6-11		( )62-148-103
			2-5	6-10		( )62-156-103
			2-4	6-9		( )62-164-103
			2-3	6-8		( )62-172-103
			2-2	6-7		( )62-180-103

TABLE BB

CABLE MEASUREMENTS

LENGTH OF CABLE, INCLUDING CONNECTION INCREMENTS, FROM CABLE RACK TO FARTHEST COMPONENT TO WHICH THE CABLE CONNECTS

CABLE DESIG	CA RACK DROP POS	CA RACK DROP LENGTH	PAL'ZD DROP LENGTH	FR POS	EQL	CABLE DESIG	CA RACK DROP POS	CA RACK DROP LENGTH	PAL'ZD DROP LENGTH	FR POS	EQL
		6-1	2-6	0							
JR311 JR311B	L	5-4	3-3	1		JR319 JR319B	L	3-11	4-8	3	
		4-7	4-0	2				3-3	5-5	4	
		3-11	4-8	3				2-6	6-1	5	
		3-3	5-5	4				1-10	6-10	6	
		2-6	6-1	5							
		5-10	2-8	0							
JR313 JR313B	L	5-1	3-5	1		JR321 JR321B	L	3-8	4-10	3	
		4-4	4-2	2				2-11	5-7	4	
		3-8	4-10	3				2-3	6-3	5	
		2-11	5-7	4				1-6	7	6	
		2-3	6-3	5							
JR315 JR315B	L	4-7	4-0	2							
		3-11	4-8	3							
		3-3	5-5	4							
		2-6	6-1	5							
		1-10	6-10	6							
JR317 JR317B	L	4-4	4-2	2							
		3-8	4-10	3							
		2-11	5-7	4							
		2-3	6-3	5							
		1-6	7-0	6							

COPYRIGHT @ 2001 LUCENT TECHNOLOGIES
ALL RIGHTS RESERVED

BT13

INTERCABINET CABLING
FOR
5ESS * SWITCH
*LUCENT TRADEMARK

DWG SIZE C2 | ISSUE 117

LUCENT TECHNOLOGIES INC | ED5D500-21 | SHEET D37 OF 292

PRINTED IN U.S.A.

TABLE BB1

CABLE MEASUREMENTS

LENGTH OF CABLE, INCLUDING CONNECTION INCREMENTS, FROM CABLE RACK TO FARTHEST COMPONENT TO WHICH THE CABLE CONNECTS

CABLE DESIG	CA RACK DROP POS	CA RACK DROP LENGTH	PAL'ZD DROP LENGTH	FR POS	EQL	CABLE DESIG	CA RACK DROP POS	CA RACK DROP LENGTH	PAL'ZD DROP LENGTH	FR POS	EQL
		6-4	2-10	0	11						
JR311A JR311C	L	5-7	3-7	1	19	JR319A JR319C	L	4-2	5-0	3	36
		4-10	4-4	2	28			3-5	5-9	4	45
		4-2	5-0	3	36			2-9	6-5	5	53
		3-5	5-9	4	45			2-0	7-2	6	62
		2-9	6-5	5	53						
		6-5	2-11	0	11						
JR313A JR313C	L	5-8	3-8	1	19	JR321A JR321C	L	4-3	5-1	3	36
		4-11	4-5	2	28			3-6	5-10	4	45
		4-3	5-1	3	36			2-10	6-6	5	53
		3-6	5-10	4	45			2-1	7-3	6	62
		2-10	6-6	5	53						
JR315A JR315C	L	4-10	4-4	2	28						
		4-2	5-0	3	36						
		3-5	5-9	4	45						
		2-9	6-5	5	53						
		2-0	7-2	6	62						
JR317A JR317C	L	4-11	4-5	2	28						
		4-3	5-1	3	36						
		3-6	5-10	4	45						
		2-10	6-6	5	53						
		2-1	7-3	6	62						

TABLE BB2

CABLE MEASUREMENTS

LENGTH OF CABLE INCLUDING CONNECTING INCREMENTS, FROM CABLE RACK OR PALLET TO FARTHEST COMPONENT TO WHICH CABLE CONNECTS

ED5D500-21 GROUP	CABLE DESIG	POS	CA RACK DROP LENGTH	PAL'ZD DROP LENGTH	CAB POS	EQL	ED5D500-21 GROUP	CABLE DESIG	POS	CA RACK DROP LENGTH	PAL'ZD DROP LENGTH	CAB POS	EQL
			7-0	4-1	0	11-099				7-2	3-9	0	11-154
145	JR305	L	6-3	4-10	1	19-099	146C	JR322D	R	6-5	4-5	1	19-154
145A	JR305A		5-6	5-7	2	28-099	146D	JR323D					
145D	JR3		4-10	6-3	3	36-099	146E	JR322E		5-8	5-2	2	28-154"
145E	JR4		4-1	7-0	4	45-099	146F	JR323E					
145H	JR7		3-5	7-8	5	53-099		JR322F		5-0	5-10	3	36-154
145J	JR8		2-8	8-5	6	62-099		JR323F		4-3	6-7	4	45-154
										3-7	7-3	5	53-154
										2-10	8-0	6	62-154
			7-4	3-11	0	11-099						0	11-099
145	JR306	R	6-7	4-7	1	19-099	145K	JR305B	L	8-5		1	19-099
145A	JR306A		5-10	5-4	2	28-099						2	28-099
145B	JR1		5-2	6-0	3	36-099						0	11-099
145C	JR2		4-5	6-9	4	45-099	145K	JR306B	R	8-2		1	19-099
145F	JR5		3-9	7-5	5	53-099						2	28-099
145G	JR6		3-0	8-2	6	62-099							
			7-0	4-1	0	11-052							
146	JR322	L	6-3	4-10	1	19-052							
146A	JR323		5-6	5-7	2	28-052							
146B	JR322A		4-10	6-3	3	36-052							
150	JR323A		4-1	7-0	4	45-052							
	JR322C		3-5	7-8	5	53-052							
	JR323C		2-8	8-5	6	62-052							
	JR322B												
	JR323B												
			7-4	3-11	0	11-136							
147	JR324	R	6-7	4-7	1	19-136							
147A	JR325		5-10	5-4	2	28-136							
147B	JR324A		5-2	6-0	3	36-136							
151	JR325A		4-5	6-9	4	45-136							
	JR324C		3-9	7-5	5	53-136							
	JR325C		3-0	8-2	6	62-136							
	JR324B												
	JR325B												

COPYRIGHT @ 2001 LUCENT TECHNOLOGIES
ALL RIGHTS RESERVED

BT13

INTERCABINET CABLING
FOR
5ESS * SWITCH
*LUCENT TRADEMARK

DWG SIZE C2 | ISSUE 117

LUCENT TECHNOLOGIES INC | ED5D500-21 | SHEET D38 OF 292

PRINTED IN U.S.A.

TABLE BB3

CABLE MEASUREMENTS

LENGTH OF CABLE INCLUDING CONNECTING INCREMENTS, FROM CABLE RACK OR PALLET TO FARTHEST COMPONENT TO WHICH CABLE CONNECTS

ED5D500-21 GROUP	CABLE DESIG	POS	CA RACK DROP LENGTH	PAL'ZD DROP LENGTH	CAB POS	EQL	ED5D500-21 GROUP	CABLE DESIG	POS	CA RACK DROP LENGTH	PAL'ZD DROP LENGTH	CAB POS	EQL
			6-4	3-10	0	11-089				6-4	3-10	0	11-099
153	JR760	L	6-7	4-7	1	19-089	154	JR761	R	6-7	4-7	1	19-099
153A	JR760A						154A	JR761A					
	JR764		5-10	5-4	2	28-089		JR765		5-10	5-4	2	28-099
	JR764A							JR765A					
			5-2	6-0	3	36-089				5-2	6-0	3	36-099
			4-5	6-9	4	45-089				4-5	6-9	4	45-099
			3-9	7-5	5	53-089				3-9	7-5	5	53-099
			3-0	8-2	6	62-089				3-0	8-2	6	62-099
			8-2	4-8	0	11-169						0	
131A	JR750	L	7-5	5-5	1	19-169						1	
132A	JR750A												
152	JR752		6-8	6-2	2	28-169						2	
152A	JR752A												
	JR758		6-0	6-10	3	36-169						3	
	JR758A												
	JR762		5-3	7-7	4	45-169						4	
	JR762A												
			4-7	8-3	5	53-169						5	
			3-10	9-0	6	62-169						6	

TABLE BC

CABLE MEASUREMENTS

LENGTH OF CABLE, INCLUDING CONNECTION INCREMENTS, FROM CABLE RACK TO FARTHEST COMPONENT TO WHICH THE CABLE CONNECTS

CABLE DESIG	CA RACK DROP POS	CA RACK DROP LENGTH	PAL'ZD DROP LENGTH	FR POS	EQL	CABLE DESIG	CA RACK DROP POS	CA RACK DROP LENGTH	PAL'ZD DROP LENGTH	FR POS	EQL
		7-5	4-7	0,1	11-107-000 19-107-000			6-11	4-1	0,1	11-131-000 19-131-000
JR281	L	6-8	5-4	1,2	19-107-000 28-107-000	JR283	R	6-2	4-10	1,2	19-131-000 28-131-000
JR281 A		5-11	6-0	2,3	28-107-000 36-107-000	JR283 A		5-5	5-6	2,3	28-131-000 36-131-000
JR281 B		5-3	6-9	3,4	36-107-000 45-107-000	JR283 B		4-9	6-3	3,4	36-131-000 45-131-000
JR281 D		4-6	7-5	4,5	45-107-000 53-107-000	JR283 D		4-0	6-11	4,5	45-131-000 53-131-000
JR281 E		3-10	8-2	5,6	53-107-000 62-107-000	JR283 E		3-4	7-8	5,6	53-131-000 62-131-000
		7-7	4-9	0,1	11-123-000 19-123-000			6-9	3-11	0,1	11-147-000 19-147-000
JR282	L	6-10	5-6	1,2	19-123-000 28-123-000	JR284	R	6-0	4-8	1,2	19-147-000 28-147-000
JR282 A		6-1	6-2	2,3	28-123-000 36-123-000	JR284 A		5-3	5-4	2,3	28-147-000 36-147-000
JR282 B		5-5	6-11	3,4	36-123-000 45-123-000	JR284 B		4-7	6-1	3,4	36-147-000 45-147-000
JR282 D		4-8	7-7	4,5	45-123-000 53-123-000	JR284 D		3-10	6-9	4,5	45-147-000 53-147-000
JR282 E		4-0	8-4	5,6	53-123-000 62-123-000	JR284 E		3-2	7-6	5,6	53-147-000 62-147-000
								6-7	3-9	0,1	11-163-000 19-163-000
						JR285	R	5-10	4-6	1,2	19-163-000 28-163-000
						JR285 A		5-1	5-2	2,3	28-163-000 36-163-000
						JR285 B		4-5	5-11	3,4	36-163-000 45-163-000
						JR285 D		3-8	6-7	4,5	45-163-000 53-163-000
						JR285 E		3-0	7-4	5,6	53-163-000 62-163-000

COPYRIGHT @ 2001 LUCENT TECHNOLOGIES
ALL RIGHTS RESERVED

BT13

INTERCABINET CABLING
FOR
5ESS * SWITCH
*LUCENT TRADEMARK

DWG SIZE C2 | ISSUE 117

LUCENT TECHNOLOGIES INC | ED5D500-21 | SHEET D39 OF 292

PRINTED IN U.S.A.

TABLE BC1

CABLE MEASUREMENTS													
LENGTH OF CABLE, INCLUDING CONNECTION INCREMENTS, FROM CABLE RACK TO FARTHEST COMPONENT TO WHICH THE CABLE CONNECTS													
CABLE DESIG		CA RACK DROP LENGTH	PAL'ZD DROP LENGTH	FR POS	EQL	CABLE DESIG		CA RACK DROP LENGTH	PAL'ZD DROP LENGTH	FR POS	EQL
		7-5	4-7	0,1	11-107-000 19-107-000			6-11	4-1	0,1	11-131-000 19-131-000
JR291 JR291 B	L	6-8	5-4	1,2	19-107-000 28-107-000	JR293 JR293 B	R	6-2	4-10	1,2	19-131-000 28-131-000
		5-11	6-0	2,3	28-107-000 36-107-000			5-5	5-6	2,3	28-131-000 36-131-000
		5-3	6-9	3,4	36-107-000 45-107-000			4-9	6-3	3,4	36-131-000 45-131-000
		4-6	7-5	4,5	45-107-000 53-107-000			4-0	6-11	4,5	45-131-000 53-131-000
		3-10	8-2	5,6	53-107-000 62-107-000			3-4	7-8	5,6	53-131-000 62-131-000
		7-7	4-9	0,1	11-123-000 19-123-000			6-9	3-11	0,1	11-147-000 19-147-000
JR292 JR292 B	L	6-10	5-6	1,2	19-123-000 28-123-000	JR294 JR294 B	R	6-0	4-8	1,2	19-147-000 28-147-000
		6-1	6-2	2,3	28-123-000 36-123-000			5-3	5-4	2,3	28-147-000 36-147-000
		5-5	6-11	3,4	36-123-000 45-123-000			4-7	6-1	3,4	36-147-000 45-147-000
		4-8	7-7	4,5	45-123-000 53-123-000			3-10	6-9	4,5	45-147-000 53-147-000
		4-0	8-4	5,6	53-123-000 62-123-000			3-2	7-6	5,6	53-147-000 62-147-000
								6-7	3-9	0,1	11-163-000 19-163-000
						JR295 JR295 B	R	5-10	4-6	1,2	19-163-000 28-163-000
								5-1	5-2	2,3	28-163-000 36-163-000
								4-5	5-11	3,4	36-163-000 45-163-000
								3-8	6-7	4,5	45-163-000 53-163-000
								3-0	7-4	5,6	53-163-000 62-163-000

TABLE BC2

CABLE MEASUREMENTS													
LENGTH OF CABLE, INCLUDING CONNECTING INCREMENTS FROM CABLE RACK OR PALLET TO FARTHEST COMPONENT TO WHICH CABLE CONNECTS													
ED5D500-21 GROUP	CABLE DESIG	POS	CA RACK DROP LENGTH	PAL'ZD DROP LENGTH	CAB POS	EQL	ED5D500-21 GROUP	CABLE DESIG	POS	CA RACK DROP LENGTH	PAL'ZD DROP LENGTH	CAB POS	EQL
			7-5	3-9	0	11-107-000				6-11	3-3	0	11-131-000

*** CONTINUED ***

** CONTINUED **
TABLE BC2

CABLE MEASUREMENTS													
LENGTH OF CABLE, INCLUDING CONNECTING INCREMENTS FROM CABLE RACK OR PALLET TO FARTHEST COMPONENT TO WHICH CABLE CONNECTS													
ED5D500-21 GROUP	CABLE DESIG	POS	CA RACK DROP LENGTH	PAL'ZD DROP LENGTH	CAB POS	EQL	ED5D500-21 GROUP	CABLE DESIG	POS	CA RACK DROP LENGTH	PAL'ZD DROP LENGTH	CAB POS	EQL
G214A G214B	JR131A JR131B	L	6-8	4-6	1	19-107-000	G215A G215B	JR135A JR135B	R	6-2	4-0	1	19-131-000
			5-11	5-2	2	28-107-000				5-5	4-8	2	28-131-000
			5-3	5-10	3	36-107-000				4-9	5-4	3	36-131-000
			4-6	6-6	4	45-107-000				4-0	6-0	4	45-131-000
			3-10	7-2	5	53-107-000				3-4	6-8	5	53-131-000
					6							6	
	JR132A JR132B	L	6-8	4-5	1	19-107-000		JR136A JR136B	R	6-2	3-11	1	19-131-000
			5-11	5-2	2	28-107-000				5-5	4-8	2	28-131-000
			5-3	5-10	3	36-107-000				4-9	5-4	3	36-131-000
			4-6	6-6	4	45-107-000				4-0	6-0	4	45-131-000
			3-10	7-2	5	53-107-000				3-4	6-8	5	53-131-000
			3-2	7-10	6	62-107-000				2-8	7-4	6	62-131-000
			7-7	3-11	0	11-123-000				6-9	3-1	0	11-147-000
	JR133A JR133B	L	6-10	4-8	1	19-123-000	G216A G216B	JR137A JR137B	R	6-0	3-10	1	19-147-000
			6-1	5-4	2	28-123-000				5-3	4-6	2	28-147-000
			5-5	6-0	3	36-123-000				4-7	5-2	3	36-147-000
			4-8	6-8	4	45-123-000				3-10	5-10	4	45-147-000
			4-0	7-4	5	53-123-000				3-2	6-6	5	53-147-000
					6							6	
	JR134A JR134B		6-10	4-7	1	19-123-000		JR138A JR138B	R	6-0	3-9	1	19-147-000
			6-1	5-4	2	28-123-000				5-3	4-6	2	28-147-000
			5-5	6-0	3	36-123-000				4-7	5-2	3	36-147-000
			4-8	6-8	4	45-123-000				3-10	5-10	4	45-147-000
			4-0	7-4	5	53-123-000				3-2	6-6	5	53-147-000
			3-4	8-0	6	62-123-000				2-6	7-2	6	62-147-000
			6-7	2-11	0	11-163-000							
G217A G217B	JR139A JR139B	R	5-10	3-8	1	19-163-000						1	
			5-1	4-4	2	28-163-000						2	
			4-5	5-0	3	36-163-000						3	
			3-8	5-8	4	45-163-000						4	
			3-0	6-4	5	53-163-000						5	
					6							6	
	JR140A JR140B	R	5-10	3-7	1	19-163-000						1	
			5-1	4-4	2	28-163-000						2	
			4-5	5-0	3	36-163-000						3	

*** CONTINUED ***

COPYRIGHT @ 2001 LUCENT TECHNOLOGIES
ALL RIGHTS RESERVED

BT13

INTERCABINET CABLING
FOR
5ESS * SWITCH
*LUCENT TRADEMARK

DWG SIZE C2 | ISSUE 117

LUCENT TECHNOLOGIES INC | ED5D500-21 | SHEET D40 OF 292

PRINTED IN U.S.A.

** CONTINUED **
TABLE BC2

CABLE MEASUREMENTS													
LENGTH OF CABLE, INCLUDING CONNECTING INCREMENTS FROM CABLE RACK OR PALLET TO FARTHEST COMPONENT TO WHICH CABLE CONNECTS													
ED5D500-21 GROUP	CABLE DESIG	POS	CA RACK DROP LENGTH	PAL'ZD DROP LENGTH	CAB POS	EQL	ED5D500-21 GROUP	CABLE DESIG	POS	CA RACK DROP LENGTH	PAL'ZD DROP LENGTH	CAB POS	EQL
			3-8	5-8	4	45-163-000						4	
			3-0	6-4	5	53-163-000						5	
			2-4	7-0	6	62-163-000						6	

TABLE BD

CABLE MEASUREMENTS											
LENGTH OF CABLE, INCLUDING CONNECTION INCREMENTS, FROM CABLE RACK TO FARTHEST COMPONENT TO WHICH THE CABLE CONNECTS											
CABLE DESIG	DROP POS	DROP LENGTH	SM NBR	EQL	CABLE DESIG	DROP POS	DROP LENGTH	SM NBR	EQL
JL105	L	5-7	001	028-062-132	JL101	L	3-5	001	053-062-132
JL107					JL103				
JL5		6-4	002	028-062-113	JL7		4-2	002	053-062-113
		5-6	003	028-052-132			3-4	003	053-052-132
		6-3	004	028-052-113			4-1	004	053-052-113
		5-5	005	028-042-132			3-3	005	053-042-132
		6-2	006	028-042-113			4-0	006	053-042-113
	R	5-7	007	028-126-132		R	3-5	007	053-126-132
		6-4	008	028-126-113			4-2	008	053-126-113
		5-6	009	028-136-132			3-4	009	053-136-132
		6-3	010	028-136-113			4-1	010	053-136-113
		5-5	011	028-146-132			3-3	011	053-146-132
		6-2	012	028-146-113			4-0	012	053-146-113
		5-4	013	028-156-132			3-2	013	053-156-132
		6-1	014	028-156-113			3-10	014	053-156-113
	L	6-6	015	019-072-132		L	4-4	015	045-072-132
		7-2	016	019-072-113			5-0	016	045-072-113
		6-4	017	019-062-132			4-2	017	045-062-132
		7-0	018	019-062-113			4-10	018	045-062-113
		6-3	019	019-052-132			4-1	019	045-052-132
		6-11	020	019-052-113			4-9	020	045-052-113
		6-2	021	019-042-132			4-0	021	045-042-132
		6-10	022	019-042-113			4-8	022	045-042-113
	R	6-4	023	019-126-132		R	4-2	023	045-126-132
		7-0	024	019-126-113			4-10	024	045-126-113
		6-3	025	019-136-132			4-1	025	045-136-132
		6-11	026	019-136-113			4-9	026	045-136-113
		6-2	027	019-146-132			4-0	027	045-146-132
		6-10	028	019-146-113			4-8	028	045-146-113
		6-1	029	019-156-132			3-11	029	045-156-132
		6-9	030	019-156-113			4-7	030	045-156-113

TABLE BE

CABLE MEASUREMENTS											
LENGTH OF CABLE, INCLUDING CONNECTION INCREMENTS, FROM CABLE RACK TO FARTHEST COMPONENT TO WHICH THE CABLE CONNECTS											
CABLE DESIG	DROP POS	DROP LENGTH	SM NBR	EQL	CABLE DESIG	DROP POS	DROP LENGTH	SM NBR	EQL
JL106	L	5-7	001	128-062-132	JL102	L	3-5	001	153-062-132
JL108					JL104				
JL6		6-4	002	128-062-113	JL8		4-2	002	153-062-113
		5-6	003	128-052-132			3-4	003	153-052-132
		6-3	004	128-052-113			4-1	004	153-052-113
		5-5	005	128-042-132			3-3	005	153-042-132
		6-2	006	128-042-113			4-0	006	153-042-113
	R	5-7	007	128-126-132		R	3-5	007	153-126-132
		6-4	008	128-126-113			4-2	008	153-126-113
		5-6	009	128-136-132			3-4	009	153-136-132
		6-3	010	128-136-113			4-1	010	153-136-113
		5-5	011	128-146-132			3-3	011	153-146-132
		6-2	012	128-146-113			4-0	012	153-146-113
		5-4	013	128-156-132			3-2	013	153-156-132
		6-1	014	128-156-113			3-10	014	153-156-113
	L	6-6	015	119-072-132		L	4-4	015	145-072-132
		7-2	016	119-072-113			5-0	016	145-072-113
		6-4	017	119-062-132			4-2	017	145-062-132
		7-0	018	119-062-113			4-10	018	145-062-113
		6-3	019	119-052-132			4-1	019	145-052-132
		6-11	020	119-052-113			4-9	020	145-052-113
		6-2	021	119-042-132			4-0	021	145-042-132
		6-10	022	119-042-113			4-8	022	145-042-113
	R	6-4	023	119-126-132		R	4-2	023	145-126-132
		7-0	024	119-126-113			4-10	024	145-126-113
		6-3	025	119-136-132			4-1	025	145-136-132
		6-11	026	119-136-113			4-9	026	145-136-113
		6-2	027	119-146-132			4-0	027	145-146-132
		6-10	028	119-146-113			4-8	028	145-146-113
		6-1	029	119-156-132			3-11	029	145-156-132
		6-9	030	119-156-113			4-7	030	145-156-113

COPYRIGHT @ 2001 LUCENT TECHNOLOGIES
ALL RIGHTS RESERVED

BT13

INTERCABINET CABLING
FOR
5ESS * SWITCH
*LUCENT TRADEMARK

DWG SIZE C2 | ISSUE 117

LUCENT TECHNOLOGIES INC | ED5D500-21 | SHEET OF D41 292

PRINTED IN U.S.A.

TABLE BE1

CABLE MEASUREMENTS

LENGTH OF CABLE, INCLUDING CONNECTION INCREMENTS, FROM CABLE RACK TO FARTHEST COMPONENT TO WHICH THE CABLE CONNECTS

CABLE DESIG	DROP POS	DROP LENGTH	SM NBR	EQL	CABLE DESIG	DROP POS	DROP LENGTH	SM NBR	EQL
JL29	L	5-10	001	028-062-132	JL25	L	3-9	001	053-062-132
JL31		5-10	002	028-062-100	JL27		3-9	002	053-062-100
(CM1 ONLY)		5-9	003	028-052-132	(CM1 ONLY)		3-8	003	053-052-132
		5-9	004	028-052-100			3-8	004	053-052-100
		5-8	005	028-042-132			3-7	005	053-042-132
		5-8	006	028-042-100			3-7	006	053-042-100
	R	5-10	007	028-126-132		R	3-9	007	053-126-132
		5-10	008	028-126-100			3-9	008	053-126-100
		5-9	009	028-136-132			3-8	009	053-136-132
		5-9	010	028-136-100			3-8	010	053-136-100
		5-7	011	028-146-132			3-6	011	053-146-132
		5-7	012	028-146-100			3-6	012	053-146-100
		5-6	013	028-156-132			3-5	013	053-156-132
		5-6	014	028-156-100			3-5	014	053-156-100
	L	6-8	015	019-072-132		L	4-6	015	045-072-132
		6-8	016	019-072-100			4-6	016	045-072-100
		6-7	017	019-062-132			4-5	017	045-062-132
		6-7	018	019-062-100			4-5	018	045-062-100
		6-6	019	019-052-132			4-4	019	045-052-132
		6-6	020	019-052-100			4-4	020	045-052-100
		6-5	021	019-042-132			4-3	021	045-042-132
		6-5	022	019-042-100			4-3	022	045-042-100
	R	6-7	023	019-126-132		R	4-5	023	045-126-132
		6-7	024	019-126-100			4-5	024	045-126-100
		6-6	025	019-136-132			4-4	025	045-136-132
		6-6	026	019-136-100			4-4	026	045-136-100
		6-4	027	019-146-132			4-2	027	045-146-132
		6-4	028	019-146-100			4-2	028	045-146-100
		6-3	029	019-156-132			4-1	029	045-156-132
		6-3	030	019-156-100			4-1	030	045-156-100

TABLE BE2

CABLE MEASUREMENTS

LENGTH OF CABLE, INCLUDING CONNECTION INCREMENTS, FROM CABLE RACK TO FARTHEST COMPONENT TO WHICH THE CABLE CONNECTS

CABLE DESIG	DROP POS	DROP LENGTH	SM NBR	EQL	CABLE DESIG	DROP POS	DROP LENGTH	SM NBR	EQL
JL30	L	5-10	001	128-062-132	JL26	L	3-9	001	153-062-132
JL32		5-10	002	128-062-100	JL28		3-9	002	153-062-100
(CM1 ONLY)		5-9	003	128-052-132	(CM1 ONLY)		3-8	003	153-052-132
		5-9	004	128-052-100			3-8	004	153-052-100
		5-8	005	128-042-132			3-7	005	153-042-132
		5-8	006	128-042-100			3-7	006	153-042-100
	R	5-10	007	128-126-132		R	3-9	007	153-126-132
		5-10	008	128-126-100			3-9	008	153-126-100
		5-9	009	128-136-132			3-8	009	153-136-132
		5-9	010	128-136-100			3-8	010	153-136-100
		5-7	011	128-146-132			3-6	011	153-146-132
		5-7	012	128-146-100			3-6	012	153-146-100
		5-6	013	128-156-132			3-5	013	153-156-132
		5-6	014	128-156-100			3-5	014	153-156-100
	L	6-8	015	119-072-132		L	4-6	015	145-072-132
		6-8	016	119-072-100			4-6	016	145-072-100
		6-7	017	119-062-132			4-5	017	145-062-132
		6-7	018	119-062-100			4-5	018	145-062-100
		6-6	019	119-052-132			4-4	019	145-052-132
		6-6	020	119-052-100			4-4	020	145-052-100
		6-5	021	119-042-132			4-3	021	145-042-132
		6-5	022	119-042-100			4-3	022	145-042-100
	R	6-7	023	119-126-132		R	4-5	023	145-126-132
		6-7	024	119-126-100			4-5	024	145-126-100
		6-6	025	119-136-132			4-4	025	145-136-132
		6-6	026	119-136-100			4-4	026	145-136-100
		6-4	027	119-146-132			4-2	027	145-146-132
		6-4	028	119-146-100			4-2	028	145-146-100
		6-3	029	119-156-132			4-1	029	145-156-132
		6-3	030	119-156-100			4-1	030	145-156-100

TABLE BF

CABLE MEASUREMENTS [130]

LENGTH OF CABLE, INCLUDING CONNECTION INCREMENTS, FROM CABLE RACK TO FARTHEST COMPONENT TO WHICH THE CABLE CONNECTS

CABLE DESIG	CA RACK DROP POS	CA RACK DROP LENGTH	PAL'ZD DROP LENGTH	FR POS	EQL	CABLE DESIG	CA RACK DROP POS	CA RACK DROP LENGTH	PAL'ZD DROP LENGTH	FR POS	EQL
JR37	R	4-3	4-9	3	36-178-146						
OR											
JR38		3-6	5-6	4	45-178-146						
OR											
JR150		2-9	7-2	5	53-178-146						
OR											
JR152											

TABLE BH

CABLE MEASUREMENTS

LENGTH OF CABLE, INCLUDING CONNECTION INCREMENTS, FROM CABLE RACK TO FARTHEST COMPONENT TO WHICH THE CABLE CONNECTS

CABLE DESIG	CA RACK DROP POS	CA RACK DROP LENGTH	PAL'ZD DROP LENGTH	FR POS	EQL	CABLE DESIG	CA RACK DROP POS	CA RACK DROP LENGTH	PAL'ZD DROP LENGTH	FR POS	EQL
		9-2	4-5	0	11-180-117						
JR101A	L	8-5	5-2	1	19-180-117						
		7-7	5-11	2	28-180-117						
		6-9	6-7	3	36-180-117						
		5-11	7-4	4	45-180-117						
		5-1	8-0	5	53-180-117						
		4-4	8-9	6	62-180-117						
		8-10	4-4	0	11-032-104						
JR102A	R	8-1	5-1	1	19-032-104						
		7-3	5-10	2	28-032-104						
		6-5	6-6	3	36-032-104						
		5-7	7-3	4	45-032-104						
		4-9	7-11	5	53-032-104						
		4-0	8-8	6	62-032-104						

TABLE BN

CABLE MEASUREMENTS

LENGTH OF CABLE INCLUDING CONNECTION INCREMENTS, FROM CABLE RACK TO FARTHEST COMPONENT TO WHICH THE CABLE CONNECTS.

CABLE DESIG	CA RACK DROP POS	CA RACK DROP LENGTH	PAL'ZD DROP LENGTH	FR POS	EQL	CABLE DESIG	DROP POS	DROP LENGTH	FR POS	EQL
JV11	L	3-9	8-11		064-178-113					
JV11A										
JV10		4-1	8-7		060-178-113					
JV10B										
		4-5	8-3		056-178-113					
		4-9	7-11		052-178-113					

COPYRIGHT @ 2001 LUCENT TECHNOLOGIES
ALL RIGHTS RESERVED

BT13

INTERCABINET CABLING
FOR
5ESS * SWITCH
*LUCENT TRADEMARK

DWG SIZE C2 | ISSUE 117

PRINTED IN U.S.A.

TABLE BN1

CABLE MEASUREMENTS AND STAMPING INFORMATION

LENGTH OF CABLE, INCLUDING CONNECTING INCREMENTS, FROM CABLE RACK OR PALLET TO FARTHEST COMPONENT TO WHICH CABLE CONNECTS

ED5D500-21 GROUP	CABLE DESIG	POS	CA RACK DROP LENGTH	PAL'ZD DROP	CAB POS	EQL
			7-11	4-5	0	()11-176-151
32	JX105A	L	7-2	5-2	1	()19-176-151
			6-5	5-11	2	()28-176-151
			5-9	6-7	3	()36-176-151
			5-0	7-4	4	()45-176-151
			4-4	8-0	5	()53-176-151
			3-7	8-9	6	()62-176-151
33	JX123	R	7-2	4-4	0	()11-072-145
			7-1	4-3		()11-080-145
			7-0	4-2		()11-088-145
			6-11	4-1		()11-096-145
			6-10	4-0		()11-104-145
			6-9	3-11		()11-112-145
			6-8	3-10		()11-120-145
			6-7	3-9		()11-128-145
			6-6	3-8		()11-136-145
			6-5	3-7		()11-144-145
			6-4	3-6		()11-152-145
			6-3	3-5		()11-160-145
			6-2	3-4		()11-168-145
			6-1	3-3		()11-176-145
			6-5	5-1	1	()19-072-145
			6-4	5-0		()19-080-145
			6-3	4-11		()19-088-145
			6-2	4-10		()19-096-145
			6-1	4-9		()19-104-145
			6-0	4-8		()19-112-145
			5-11	4-7		()19-120-145
			5-10	4-6		()19-128-145
			5-9	4-5		()19-136-145
			5-8	4-4		()19-144-145
			5-7	4-3		()19-152-145
			5-6	4-2		()19-160-145
			5-5	4-1		()19-168-145
			5-4	4-0		()19-176-145

*** CONTINUED ***

** CONTINUED **
TABLE BN1

33	JX123	R	5-8	5-9	2	()28-072-145
			5-7	5-8		()28-080-145
			5-6	5-7		()28-088-145
			5-5	5-6		()28-096-145
			5-4	5-5		()28-104-145
			5-3	5-4		()28-112-145
			5-2	5-3		()28-120-145
			5-1	5-2		()28-128-145
			5-0	5-1		()28-136-145
			4-11	5-0		()28-144-145
			4-10	4-11		()28-152-145
			4-9	4-10		()28-160-145
			4-8	4-9		()28-168-145
			4-7	4-8		()28-176-145
33	JX123	R	5-0	6-5	3	()36-072-145
			4-11	6-4		()36-080-145
			4-10	6-3		()36-088-145
			4-9	6-2		()36-096-145
			4-8	6-1		()36-104-145
			4-7	6-0		()36-112-145
			4-6	5-11		()36-120-145
			4-5	5-10		()36-128-145
			4-4	5-9		()36-136-145
			4-3	5-8		()36-144-145
			4-2	5-7		()36-152-145
			4-1	5-6		()36-160-145
			4-0	5-5		()36-168-145
			3-11	5-4		()36-176-145
33	JX123	R	4-3	7-2	4	()45-072-145
			4-2	7-1		()45-080-145
			4-1	7-0		()45-088-145
			4-0	6-11		()45-096-145
			3-11	6-10		()45-104-145
			3-10	6-9		()45-112-145
			3-9	6-8		()45-120-145
			3-8	6-7		()45-128-145
			3-7	6-6		()45-136-145
			3-6	6-5		()45-144-145
			3-5	6-4		()45-152-145

*** CONTINUED ***

** CONTINUED **
TABLE BN1

			3-4	6-3		()45-160-145
			3-3	6-2		()45-168-145
			3-2	6-1		()45-176-145
33	JX123	R	3-7	7-10	5	()53-072-145
			3-6	7-9		()53-080-145
			3-5	7-8		()53-088-145
			3-4	7-7		()53-096-145
			3-3	7-6		()53-104-145
			3-2	7-5		()53-112-145
			3-1	7-4		()53-120-145
			3-0	7-3		()53-128-145
			2-11	7-2		()53-136-145
			2-10	7-1		()53-144-145
			2-9	7-0		()53-152-145
			2-8	6-11		()53-160-145
			2-7	6-10		()53-168-145
			2-6	6-9		()53-176-145
33	JX123	R	2-11	8-6	6	()62-072-145
			2-10	8-5		()62-080-145
			2-9	8-4		()62-088-145
			2-8	8-3		()62-096-145
			2-7	8-2		()62-104-145
			2-6	8-1		()62-112-145
			2-5	8-0		()62-120-145
			2-4	7-11		()62-128-145
			2-3	7-10		()62-136-145
			2-2	7-9		()62-144-145
			2-1	7-8		()62-152-145
			2-0	7-7		()62-160-145
			1-11	7-6		()62-168-145
			1-10	7-5		()62-176-145

TABLE BO 1

CABLE MEASUREMENTS

LENGTH OF CABLE, INCLUDING CONNECTING INCREMENTS, FROM CABLE RACK OR PALLET TO FARTHEST COMPONENT TO WHICH CABLE CONNECTS

ED-5D500-21 GROUP	CABLE DESIG	POS	CA RACK DROP LENGTH	PAL'ZD DROP LENGTH	CAB POS	EQL
8A,8D,8E	JL41	L	6-6		0	11-066-132
			7-3		1	19-066-132

*** CONTINUED ***

** CONTINUED **
TABLE BO 1

CABLE MEASUREMENTS

LENGTH OF CABLE, INCLUDING CONNECTING INCREMENTS, FROM CABLE RACK OR PALLET TO FARTHEST COMPONENT TO WHICH CABLE CONNECTS

ED-5D500-21 GROUP	CABLE DESIG	POS	CA RACK DROP LENGTH	PAL'ZD DROP LENGTH	CAB POS	EQL
	JL101		5-9		2	28-066-132
			5-1		3	36-066-132
			4-4		4	45-066-132
			3-8		5	53-066-132
			2-11		6	62-066-132
			7-1		0	11-066-145
	JL43 JL103	L	6-4		1	19-066-145
			5-7		2	28-066-145
			4-11		3	36-066-145
			4-2		4	45-066-145
			3-6		5	53-066-145
			2-9		6	62-066-145
			7-5		0	11-082-132
	JL45 JL105	L	6-8		1	19-082-132
			5-11		2	28-082-132
			5-3		3	36-082-132
			4-6		4	45-082-132
			3-10		5	53-082-132
			3-1		6	62-082-132
			7-3		0	11-082-145
	JL47 JL107	L	6-6		1	19-082-145
			5-9		2	28-082-145
			5-1		3	36-082-145
			4-4		4	45-082-145
			3-8		5	53-082-145
			2-11		6	62-082-145
8A,8D,8E	JL42	R	7-4		0	11-114-132
			6-7		1	19-114-132
	JL102		5-10		2	28-114-132
			5-2		3	36-114-132
			4-5		4	45-114-132
			3-9		5	53-114-132
			3-0		6	62-114-132
			7-2		0	11-114-145

*** CONTINUED ***

COPYRIGHT @ 2001 LUCENT TECHNOLOGIES
ALL RIGHTS RESERVED

BT13

INTERCABINET CABLING
FOR
5ESS * SWITCH
*LUCENT TRADEMARK

DWG SIZE C2 | ISSUE 117

LUCENT TECHNOLOGIES INC | ED5D500-21 | SHEET D43 OF 292

PRINTED IN U.S.A.

** CONTINUED **
TABLE BO 1

CABLE MEASUREMENTS						
LENGTH OF CABLE, INCLUDING CONNECTING INCREMENTS, FROM CABLE RACK OR PALLET TO FARTHEST COMPONENT TO WHICH CABLE CONNECTS						
ED-5D500-21 GROUP	CABLE DESIG	POS	CA RACK DROP LENGTH	PAL'ZD DROP LENGTH	CAB POS	EQL
	JL44 JL104	R	6-5		1	19-114-145
			5-8		2	28-114-145
			5-0		3	36-114-145
			4-3		4	45-114-145
			3-7		5	53-114-145
			2-10		6	62-114-145
			7-2		0	11-130-132
	JL46 JL106	R	6-5		1	19-130-132
			5-8		2	28-130-132
			5-0		3	36-130-132
			4-3		4	45-130-132
			3-7		5	53-130-132
			2-10		6	62-130-132
			7-0		0	11-130-145
	JL48 JL108	R	6-3		1	19-130-145
			5-6		2	28-130-145
			4-10		3	36-130-145
			4-1		4	45-130-145
			3-5		5	53-130-145
			2-8		6	62-130-145
9A	JL49	L	6-10		0	11-026-132
			6-1		1	19-026-132
	JL101		5-4		2	28-026-132
			4-8		3	36-026-132
			3-11		4	45-026-132
			3-3		5	53-026-132
			2-6		6	62-026-132
			6-8		0	11-026-145
	JL51 JL103	L	5-11		1	19-026-145
			5-2		2	28-026-145
			4-6		3	36-026-145
			3-9		4	45-026-145
			3-1		5	53-026-145
			2-4		6	62-026-145

*** CONTINUED ***

** CONTINUED **
TABLE BO 1

CABLE MEASUREMENTS						
LENGTH OF CABLE, INCLUDING CONNECTING INCREMENTS, FROM CABLE RACK OR PALLET TO FARTHEST COMPONENT TO WHICH CABLE CONNECTS						
ED-5D500-21 GROUP	CABLE DESIG	POS	CA RACK DROP LENGTH	PAL'ZD DROP LENGTH	CAB POS	EQL
			7-0		0	11-042-132
	JL53 JL105	L	6-3		1	19-042-132
			5-6		2	28-042-132
			4-10		3	36-042-132
			4-1		4	45-042-132
			3-5		5	53-042-132
			2-8		6	62-042-132
			6-10		0	11-042-145
	JL55 JL107	L	6-1		1	19-042-145
			5-8		2	28-042-145
			4-8		3	36-042-145
			3-11		4	45-042-145
			3-3		5	53-042-145
			2-6		6	62-042-145
9A	JL50	R	7-0		0	11-154-132
			6-3		1	19-154-132
	JL102		5-6		2	28-154-132
			4-10		3	36-154-132
			4-1		4	45-154-132
			3-5		5	53-154-132
			2-8		6	62-154-132
			6-10		0	11-154-145
	JL52 JL104	R	6-1		1	19-154-145
			5-4		2	28-154-145
			4-8		3	36-154-145
			3-11		4	45-154-145
			3-3		5	53-154-145
			2-6		6	62-154-145
			6-9		0	11-170-132
	JL54 JL106	R	6-0		1	19-170-132
			5-3		2	28-170-132
			4-7		3	36-170-132
			3-10		4	45-170-132
			3-2		5	53-170-132

*** CONTINUED ***

** CONTINUED **
TABLE BO 1

CABLE MEASUREMENTS						
LENGTH OF CABLE, INCLUDING CONNECTING INCREMENTS, FROM CABLE RACK OR PALLET TO FARTHEST COMPONENT TO WHICH CABLE CONNECTS						
ED-5D500-21 GROUP	CABLE DESIG	POS	CA RACK DROP LENGTH	PAL'ZD DROP LENGTH	CAB POS	EQL
			2-5		6	62-170-132
			6-7		0	11-170-145
	JL56 JL108	R	5-10		1	19-170-145
			5-1		2	28-170-145
			4-5		3	36-170-145
			3-8		4	45-170-145
			3-0		5	53-170-145
			2-3		6	62-170-145

TABLE BO 2

CABLE MEASUREMENTS						
LENGTH OF CABLE, INCLUDING CONNECTING INCREMENTS, FROM CABLE RACK OR PALLET TO FARTHEST COMPONENT TO WHICH CABLE CONNECTS						
ED-5D500-21 GROUP	CABLE DESIG	POS	CA RACK DROP LENGTH	PAL'ZD DROP LENGTH	CAB POS	EQL
			6-5		0	11-022-132
G8B OR G8C J5D003ED-2 L3	JL101 JL103	L	5-8		1	19-022-132
			4-11		2	28-022-132
			4-3		3	36-022-132
			3-6		4	45-022-132
			2-10		5	53-022-132
			2-1		6	62-022-132
			6-6		0	11-030-132
	JL105 JL107	L	5-9		1	19-030-132
			5-0		2	28-030-132
			4-4		3	36-030-132
			3-7		4	45-030-132
			2-11		5	53-030-132
			2-2		6	62-030-132
			6-8		0	11-138-132
	JL102 JL104	R	5-11		1	19-138-132
			5-2		2	28-138-132
			4-6		3	36-138-132
			3-9		4	45-138-132

*** CONTINUED ***

** CONTINUED **
TABLE BO 2

CABLE MEASUREMENTS						
LENGTH OF CABLE, INCLUDING CONNECTING INCREMENTS, FROM CABLE RACK OR PALLET TO FARTHEST COMPONENT TO WHICH CABLE CONNECTS						
ED-5D500-21 GROUP	CABLE DESIG	POS	CA RACK DROP LENGTH	PAL'ZD DROP LENGTH	CAB POS	EQL
			3-1		5	53-138-132
			2-4		6	62-138-132
			6-7		0	11-146-132
	JL106 JL108	R	5-10		1	19-146-132
			5-1		2	28-146-132
			4-5		3	36-146-132
			3-8		4	45-146-132
			3-0		5	53-146-132
			2-3		6	62-146-132
			6-7		0	11-038-132
G8B OR G8C J5D003ED-2 L4	JL101 JL103	L	5-10		1	19-038-132
			5-1		2	28-038-132
			4-5		3	36-038-132
			3-8		4	45-038-132
			3-0		5	53-038-132
			2-3		6	62-038-132
			6-8		0	11-046-132
	JL105 JL107	L	5-11		1	19-046-132
			5-2		2	28-046-132
			4-6		3	36-046-132
			3-9		4	45-046-132
			3-1		5	53-046-132
			2-4		6	62-046-132
			6-6		0	11-154-132
	JL102 JL104	R	5-9		1	19-154-132
			5-0		2	28-154-132
			4-4		3	36-154-132
			3-7		4	45-154-132
			2-11		5	53-154-132
			2-2		6	62-154-132
			6-5		0	11-162-132
	JL106 JL108	R	5-8		1	19-162-132
			4-11		2	28-162-132
			4-3		3	36-162-132

*** CONTINUED ***

COPYRIGHT @ 2001 LUCENT TECHNOLOGIES
ALL RIGHTS RESERVED

BT13

INTERCABINET CABLING
FOR
5ESS * SWITCH
*LUCENT TRADEMARK

DWG SIZE C2 | ISSUE 117

LUCENT TECHNOLOGIES INC | ED5D500-21 | SHEET D44 OF 292

PRINTED IN U.S.A.

** CONTINUED **

TABLE BO 2

CABLE MEASUREMENTS

LENGTH OF CABLE, INCLUDING CONNECTING INCREMENTS, FROM CABLE RACK OR PALLET TO FARTHEST COMPONENT TO WHICH CABLE CONNECTS

ED-5D500-21 GROUP	CABLE DESIG	POS	CA RACK DROP LENGTH	PAL'ZD DROP LENGTH	CAB POS	EQL
			3-6		4	45-162-132
			2-10		5	53-162-132
			2-1		6	62-162-132

TABLE BP

CABLE MEASUREMENTS [175]

LENGTH OF CABLE, INCLUDING CONNECTION INCREMENTS. FROM CABLE BACK TO FARTHEST COMPONENTS TO WHICH CABLE CONNECTS.

CABLE DESIG	CA RACK DROP POS	CA RACK DROP LENGTH	PAL'ZD DROP LENGTH	FR POS	EQL	CABLE DESIG	CA RACK DROP POS	CA RACK DROP LENGTH	PAL'ZD DROP LENGTH	FR POS	EQL
		8-4		0	11-096-322			7-10		0	11-096-322
JR20	L	7-7		1	19-096-322	JR20	R	7-1		1	19-096-322
		6-11		2	28-096-322			6-11		2	28-096-322
		6-2		3	36-096-322			6-2		3	36-096-322
		5-5		4	45-096-322			5-5		4	45-096-322
		4-9		5	53-096-322			4-9		5	53-096-322
		7-9	4-1	0	11-135-000			7-0	4-10	1	19-135-000
JR261 JR261A	L	7-0	4-10	1	19-135-000	JR263 JR263A	L	6-3	5-7	2	28-135-000
JR261B JR261D		6-3	5-7	2	28-135-000	JR263B JR263D		5-7	6-3	3	36-135-000
JR261E JR121A		5-7	6-3	3	36-135-000	JR263E JR125A		4-10	7-0	4	45-135-000
JR121B JR122A		4-10	7-0	4	45-135-000	JR125B JR126A		4-2	7-8	5	53-135-000
JR122B JR141A JR142A		4-2	7-8	5	53-135-000	JR126B JR145A JR146A		3-5	8-5	6	62-135-000
		6-10	3-2	0	11-143-000			6-1	3-11	1	11-143-000
JR262 JR262A	R	6-1	3-11	1	19-143-000	JR264 JR264A	R	5-4	4-8	2	28-143-000
JR262B JR262D		5-4	4-8	2	28-143-000	JR264B JR264D		4-8	5-4	3	36-143-000
JR262E JR123A		4-8	5-4	3	36-143-000	JR264E JR127A		3-11	6-1	4	45-143-000
JR123B JR124A		3-11	6-1	4	45-143-000	JR127B JR128A		3-3	6-9	5	53-143-000
JR124B JR143A JR144A		3-3	6-9	5	53-143-000	JR128B JR147A JR148A		2-6	7-6	6	62-143-000

TABLE BP1

CABLE MEASUREMENTS

LENGTH OF CABLE, INCLUDING CONNECTION INCREMENTS. FROM CABLE BACK TO FARTHEST COMPONENTS TO WHICH CABLE CONNECTS.

CABLE DESIG	CA RACK DROP POS	CA RACK DROP LENGTH	PAL'ZD DROP LENGTH	FR POS	EQL	CABLE DESIG	CA RACK DROP POS	CA RACK DROP LENGTH	PAL'ZD DROP LENGTH	FR POS	EQL
		7-9	4-1	0	11-135-000			7-0	4-10	1	19-135-000
JR201 JR201B	L	7-0	4-10	1	19-135-000	JR203 JR203B	L	6-3	5-7	2	28-135-000
		6-3	5-7	2	28-135-000			5-7	6-3	3	36-135-000
		5-7	6-3	3	36-135-000			4-10	7-0	4	45-135-000
		4-10	7-0	4	45-135-000			4-2	7-8	5	53-135-000
		4-2	7-8	5	53-135-000			3-5	8-5	6	62-135-000
		6-10	3-2	0	11-143-000			6-1	3-11	1	19-143-000
JR202 JR202B	R	6-1	3-11	1	19-143-000	JR204 JR204B	R	5-4	4-8	2	28-143-000
		5-4	4-8	2	28-143-000			4-8	5-4	3	36-143-000
		4-8	5-4	3	36-143-000			3-11	6-1	4	45-143-000
		3-11	6-1	4	45-143-000			3-3	6-9	5	53-143-000
		3-3	6-9	5	53-143-000			2-6	7-6	6	62-143-000

TABLE BS

CABLE MEASUREMENTS

LENGTH OF CABLE,INCLUDING CONNECTION INCREMENTS,FROM CABLE RACK TO FARTHEST COMPONENT TO WHICH THE CABLE CONNECTS

CABLE DESIG	CA RACK DROP POS	CA RACK DROP LENGTH	PAL'ZD DROP LENGTH	FR POS	EQL	CABLE DESIG	CA RACK DROP POS	CA RACK DROP LENGTH	PAL'ZD DROP LENGTH	FR POS	EQL
		8-0	4-0	0	11-052-100			8-5	4-4	0	11-164-113
JR250 OR JR250A	R	7-3	4-9	1	19-052-100	JR251 OR JR251	L	7-8	5-1	1	19-164-113
		6-6	5-6	2	28-052-100			6-11	5-10	2	28-164-113
		5-10	6-2	3	36-052-100			6-3	6-6	3	36-164-113
		5-1	6-11	4	45-052-100			5-6	7-3	4	45-164-113
		4-5	7-7	5	53-052-100			4-10	7-11	5	53-164-113
		3-8	8-4	6	62-052-100			4-1	8-8	6	62-164-113

TABLE BT

CABLE MEASUREMENTS

LENGTH OF CABLE, INCLUDING CONNECTION INCREMENTS, FROM CABLE RACK TO FARTHEST COMPONENT TO WHICH THE CABLE CONNECTS.

CABLE DESIG	CA RACK DROP POS	CA RACK DROP LENGTH	PAL'ZD DROP LENGTH	FR POS	EQL
JQ1	L	5-7	4-2	1	22-064-057
		4-11	4-11	2	31-064-057
		4-3	5-7	3	39-064-057
		3-7	6-4	4	48-064-057
		2-11	7-0	5	56-064-057
		2-3	7-9	6	65-064-057
JQ3	L	6-3	4-2	1	22-126-057
		5-7	4-11	2	31-126-057
		4-11	5-7	3	39-126-057
		4-3	6-4	4	48-126-057
		3-7	7-0	5	56-126-057
		2-11	7-9	6	65-126-057

COPYRIGHT @ 2001 LUCENT TECHNOLOGIES
ALL RIGHTS RESERVED

BT13

INTERCABINET CABLING
FOR
5ESS * SWITCH
*LUCENT TRADEMARK

DWG SIZE C2 | ISSUE 117

LUCENT TECHNOLOGIES INC | ED5D500-21 | SHEET D45 OF 292

PRINTED IN U.S.A.

TABLE BU

CABLE MEASUREMENTS

LENGTH OF CABLE, INCLUDING CONNECTION INCREMENTS FROM CABLE RACK TO FARTHEST COMPONENT TO WHICH THE CABLE CONNECTS.

CABLE DESIG	CA RACK DROP POS	CA RACK DROP LENGTH	PAL'ZD DROP LENGTH	STLWS NBR	EQL	CABLE DESIG	CA RACK DROP POS	CA RACK DROP LENGTH	PAL'ZD DROP LENGTH	STLWS NBR	EQL
JW10	L	3-5	6-6	0	142-068-145	JW11	L	3-5	6-6	0	142-068-345
		3-6	6-6	1	142-068-132			3-6	6-6	1	142-068-332
		3-2	6-2	2	042-040-145			3-2	6-2	2	042-040-345
		3-3	6-3	3	042-040-132			3-3	6-3	3	042-040-332
		3-1	6-2	4	042-034-145			3-1	6-2	4	042-034-345
		3-2	6-3	5	042-034-132			3-2	6-3	5	042-034-332
JW13	L	3-5	6-6	0	142-068-345	JW14	L	3-5	6-6	0	142-068-145
		3-6	6-6	1	142-068-332			3-6	6-6	1	142-068-132
		3-2	6-2	2	042-040-345			3-2	6-2	2	042-040-145
		3-3	6-3	3	042-040-332			3-3	6-3	3	042-040-132
		3-1	6-2	4	042-034-345			3-1	6-2	4	042-034-145
		3-2	6-3	5	042-034-332			3-2	6-3	5	042-034-132
JW15	L	3-5	6-6	0	142-068-345	JW16	L	3-5	6-6	0	142-068-345
		3-6	6-6	1	142-068-332			3-6	6-6	1	142-068-332
		3-2	6-2	2	042-040-345			3-2	6-2	2	042-040-345
		3-3	6-3	3	042-040-332			3-3	6-3	3	042-040-332
		3-1	6-2	4	042-034-345			3-1	6-2	4	042-034-345
		3-2	6-3	5	042-034-332			3-2	6-3	5	042-034-332

TABLE BU-1

CABLE MEASUREMENTS

LENGTH OF CABLE, INCLUDING CONNECTION INCREMENTS FROM CABLE RACK TO FARTHEST COMPONENT TO WHICH THE CABLE CONNECTS.

CABLE DESIG	CA RACK DROP POS	CA RACK DROP LENGTH	PAL'ZD DROP LENGTH	STLWS NBR	EQL	CABLE DESIG	CA RACK DROP POS	CA RACK DROP LENGTH	PAL'ZD DROP LENGTH	STLWS NBR	EQL
JW10	L	1-9	8-0	0	053-110-145	JW11	L	1-9	8-0	0	053-110-345
		1-10	8-0	1	053-110-132			1-10	8-0	1	053-110-332
		5-4	4-0	2	028-138-145			5-4	4-0	2	028-138-345
		5-5	4-1	3	028-138-132			5-5	4-1	3	028-138-332
		5-2	4-1	4	028-146-145			5-2	4-1	4	028-146-345
		5-3	4-2	5	028-146-132			5-3	4-2	5	028-146-332
JW13	L	1-9	8-0	0	053-110-345	JW14	L	1-9	8-0	0	053-110-145
		1-10	8-0	1	053-110-332			1-10	8-0	1	053-110-132
		5-4	4-0	2	028-138-345			5-4	4-0	2	028-138-145
		5-5	4-0	3	028-138-332			5-5	4-0	3	028-138-132
		5-2	4-1	4	028-146-345			5-2	4-1	4	028-146-145
		5-3	4-2	5	028-146-332			5-3	4-2	5	028-146-132
JW15	L	1-9	8-0	0	053-110-345	JW16	L	1-9	8-0	0	053-110-345
		1-10	8-0	1	053-110-332			1-10	8-0	1	053-110-332
		5-4	4-0	2	028-138-345			5-4	4-0	2	028-138-345
		5-5	4-1	3	028-138-332			5-5	4-1	3	028-138-332
		5-2	4-1	4	028-146-345			5-2	4-1	4	028-146-345
		5-3	4-2	5	028-146-332			5-3	4-2	5	028-146-332

TABLE BW

CABLE MEASUREMENT FOR SINGLE FABRIC [205]

LENGTH DF CABLE, INCLUDING CONNECTION INCREMENTS, FROM CABLE RACK TO FARTHEST COMPONENT TO WHICH CABLE CONNECTS

CABLE DESIG	DROP POS	DROP LENGTH	SM NBR	CM2 SIDE "0" EQL	CABLE DESIG	DROP POS	DROP LENGTH	SM NBR	CM2 SIDE "1" EQL
JL9	L	4-11	001	536-088-132	JL10	L	4-11	001	636-088-132
JL11		4-10	002	536-080-132	JL12		4-10	002	636-080-132
JL13		5-3	003	536-080-100	JL14		5-3	003	636-080-100
JL15		4-9	004	536-072-132	JL16		4-9	004	636-072-132
JL25		5-2	005	536-072-100	JL26		5-2	005	636-072-100
JL27		4-8	006	536-064-132	JL28		4-8	006	636-064-132
JL29		5-1	007	536-064-100	JL30		5-1	007	636-064-100
JL31		4-7	008	536-056-132	JL32		4-7	008	636-056-132
JL41		5-0	009	536-056-100	JL42		5-0	009	636-056-100
JL43		4-6	010	536-048-132	JL44		4-6	010	636-048-132
JL45		4-11	011	536-048-100	JL46		4-11	011	636-048-100

*** CONTINUED ***

** CONTINUED **

TABLE BW

CABLE MEASUREMENT FOR SINGLE FABRIC [205]

LENGTH DF CABLE, INCLUDING CONNECTION INCREMENTS, FROM CABLE RACK TO FARTHEST COMPONENT TO WHICH CABLE CONNECTS

CABLE DESIG	DROP POS	DROP LENGTH	SM NBR	CM2 SIDE "0" EQL	CABLE DESIG	DROP POS	DROP LENGTH	SM NBR	CM2 SIDE "1" EQL
JL47		4-5	012	536-040-132	JL48		4-5	012	636-040-132
JL49		4-10	013	536-040-100	JL50		4-10	013	636-040-100
JL51		4-4	014	536-032-132	JL52		4-4	014	636-032-132
JL53		4-9	015	536-032-100	JL54		4-9	015	636-032-100
JL55		6-4	016	519-088-132	JL56		6-4	016	619-088-132
JL101		6-3	017	519-080-132	JL102		6-3	017	619-080-132
JL103		6-8	018	519-080-100	JL104		6-8	018	619-080-100
JL105		6-2	019	519-072-132	JL106		6-2	019	619-072-132
JL107		6-7	020	519-072-100	JL108		6-7	020	619-072-100
		6-1	021	519-064-132			6-1	021	619-064-132
		6-6	022	519-064-100			6-6	022	619-064-100
		6-0	023	519-056-132			6-0	023	619-056-132
		6-5	024	519-056-100			6-5	024	619-056-100
		5-11	025	519-048-132			5-11	025	619-048-132
		6-4	026	519-048-100			6-4	026	619-048-100
		5-10	027	519-040-132			5-10	027	619-040-132
		6-3	028	519-040-100			6-3	028	619-040-100
		5-9	029	519-032-132			5-9	029	619-032-132
		6-2	030	519-032-100			6-2	030	619-032-100
		4-11	031	436-088-132			4-11	031	736-088-132
		5-4	032	436-088-100			5-4	032	736-088-100
		4-10	033	436-080-132			4-10	033	736-080-132
		5-3	034	436-080-100			5-3	034	736-080-100
		4-9	035	436-072-132			4-9	035	736-072-132
		5-2	036	436-072-100			5-2	036	736-072-100
		4-8	037	436-064-132			4-8	037	736-064-132
		5-1	038	436-064-100			5-1	038	736-064-100
		4-7	039	436-056-132			4-7	039	736-056-132
		5-0	040	436-056-100			5-0	040	736-056-100
		4-6	041	436-048-132			4-6	041	736-048-132
		4-11	042	436-048-100			4-11	042	736-048-100
		4-5	043	436-040-132			4-5	043	736-040-132
		4-10	044	436-040-100			4-10	044	736-040-100
		4-4	045	436-032-132			4-4	045	736-032-132
		4-9	046	436-032-100			4-9	046	736-032-100

*** CONTINUED ***

COPYRIGHT @ 2001 LUCENT TECHNOLOGIES
ALL RIGHTS RESERVED

BT13

INTERCABINET CABLING
FOR
5ESS * SWITCH
*LUCENT TRADEMARK

DWG SIZE C2 | ISSUE 117

LUCENT TECHNOLOGIES INC | ED5D500-21 | SHEET D46 OF 292

PRINTED IN U.S.A.

** CONTINUED **
TABLE BW

CABLE MEASUREMENT FOR SINGLE FABRIC [205]

LENGTH DF CABLE, INCLUDING CONNECTION INCREMENTS, FROM CABLE RACK TO FARTHEST COMPONENT TO WHICH CABLE CONNECTS

CABLE	DROP		SM	CM2 SIDE "0"	CABLE	DROP		SM	CM2 SIDE "1"
DESIG	POS	LENGTH	NBR	EQL	DESIG	POS	LENGTH	NBR	EQL
JL9	L	6-4	047	419-088-132	JL10	L	6-4	047	719-088-132
JL11		6-9	048	419-088-100	JL12		6-9	048	719-088-100
JL13		6-3	049	419-080-132	JL14		6-3	049	719-080-132
JL15		6-8	050	419-080-100	JL16		6-8	050	719-080-100
JL25		6-2	051	419-072-132	JL26		6-2	051	719-072-132
JL27		6-7	052	419-072-100	JL28		6-7	052	719-072-100
JL29		6-1	053	419-064-132	JL30		6-1	053	719-064-132
JL31		6-6	054	419-064-100	JL32		6-6	054	719-064-100
JL41		6-0	055	419-056-132	JL42		6-0	055	719-056-132
JL43		6-5	056	419-056-100	JL44		6-5	056	719-056-100
JL45		5-11	057	419-048-132	JL46		5-11	057	719-048-132
JL47		6-4	058	419-048-100	JL48		6-4	058	719-048-100
JL49		5-10	059	419-040-132	JL50		5-10	059	719-040-132
JL51		6-3	060	419-040-100	JL52		6-3	060	719-040-100
JL53		5-9	061	419-032-132	JL54		5-9	061	719-032-132
JL55		6-2	062	419-032-100	JL56		6-2	062	719-032-100
JL101		4-11	063	336-088-132	JL102		4-11	063	836-088-132
JL103		5-4	064	336-088-100	JL104		5-4	064	836-088-100
JL105		4-10	065	336-080-132	JL106		4-10	065	836-080-132
JL107		5-3	066	336-080-100	JL108		5-3	066	836-080-100
		4-9	067	336-072-132			4-9	067	836-072-132
		5-2	068	336-072-100			5-2	068	836-072-100
		4-8	069	336-064-132			4-8	069	836-064-132
		5-1	070	336-064-100			5-1	070	836-064-100
		4-7	071	336-056-132			4-7	071	836-056-132
		5-0	072	336-056-100			5-0	072	836-056-100
		4-6	073	336-048-132			4-6	073	836-056-132
		4-11	074	336-048-100			4-11	074	836-048-100
		4-5	075	336-040-132			4-5	075	836-040-132
		4-10	076	336-040-100			4-10	076	836-040-100
		4-4	077	336-032-132			4-4	077	836-032-132
		4-9	078	336-032-100			4-9	078	836-032-100
		6-4	079	319-088-132			6-4	079	819-088-132
		6-9	080	319-088-100			6-9	080	819-088-100
		6-3	081	319-080-132			6-3	081	819-080-132

*** CONTINUED ***

** CONTINUED **
TABLE BW

CABLE MEASUREMENT FOR SINGLE FABRIC [205]

LENGTH DF CABLE, INCLUDING CONNECTION INCREMENTS, FROM CABLE RACK TO FARTHEST COMPONENT TO WHICH CABLE CONNECTS

CABLE	DROP		SM	CM2 SIDE "0"	CABLE	DROP		SM	CM2 SIDE "1"
DESIG	POS	LENGTH	NBR	EQL	DESIG	POS	LENGTH	NBR	EQL
		6-8	082	319-080-100			6-8	082	819-080-100
		6-2	083	319-072-132			6-2	083	819-072-132
		6-7	084	319-072-100			6-7	084	819-072-100
		6-1	085	319-064-132			6-1	085	819-064-132
		6-6	086	319-064-100			6-6	086	819-064-100
		6-0	087	319-056-132			6-0	087	819-056-132
		6-5	088	319-056-100			6-5	088	819-056-100
		5-11	089	319-048-132			5-11	089	819-048-132
		6-4	090	319-048-100			6-4	090	819-048-100
		5-10	091	319-040-132			5-10	091	819-040-132
		6-3	092	319-040-100			6-3	092	819-040-100
		5-9	093	319-032-132			5-9	093	819-032-132
		6-2	094	319-032-100			6-2	094	819-032-100

TABLE BX

CABLE MEASUREMENT FOR DUAL FABRIC
LENGTH OF CABLE, INCLUDING CONNECTION INCREMENTS, FROM CABLE RACK TO FARTHEST COMPONENT TO WHICH CABLE CONNECTS

CABLE	DROP		BAY 5 SM	BAY 4 SM	BAY 3 SM	BAY 2 SM	BAY 1 SM	BAY 0 SM	CM2 SIDE "0"
DESIG	POS	LENGTH	NBR	NBR	NBR	NBR	NBR	NBR	EQL
JL13	L	6-4	001	031	063	095	127	159	19-088-132
JL15		6-4	002	032	064	096	128	160	19-088-132
JL29		6-9	*	033	065	097	129	161	19-088-100
JL31		6-9	*	034	066	098	130	162	19-088-100
JL45		6-3	003	035	067	099	131	163	19-080-132
JL47		6-3	004	036	068	100	132	164	19-080-132
JL53		6-8	005	037	069	101	133	165	19-080-100
JL55		6-8	006	038	070	102	134	166	19-080-100
JL105		6-2	007	039	071	103	135	167	19-072-132
JL107		6-2	008	040	072	104	136	168	19-072-132
		6-7	009	041	073	105	137	169	19-072-100
		6-7	010	042	074	106	138	170	19-072-100
		6-1	011	043	075	107	139	171	19-064-132
		6-1	012	044	076	108	140	172	19-064-132
		6-6	013	045	077	109	141	173	19-064-100
		6-6	014	046	078	110	142	174	19-064-100
		6-0	015	047	079	111	143	175	19-056-132
		6-0	016	048	080	112	144	176	19-056-132
		6-5	017	049	081	113	145	177	19-056-100
		6-5	018	050	082	114	146	178	19-056-100
		5-11	019	051	083	115	147	179	19-048-132
		5-11	020	052	084	116	148	180	19-048-132
		6-4	021	053	085	117	149	181	19-048-100
		6-4	022	054	086	118	150	182	19-048-100
		5-10	023	055	087	119	151	183	19-040-132
		5-10	024	056	088	120	152	184	19-040-132
		6-3	025	057	089	121	153	185	19-040-100
		6-3	026	058	090	122	154	186	19-040-100
		5-9	027	059	091	123	155	187	19-032-132
		5-9	028	060	092	124	156	188	19-032-132
		6-2	029	061	093	125	157	189	19-032-100
		6-2	030	062	094	126	158	190	19-032-100

COPYRIGHT @ 2001 LUCENT TECHNOLOGIES
ALL RIGHTS RESERVED

BT13

INTERCABINET CABLING
FOR
5ESS * SWITCH
*LUCENT TRADEMARK

DWG SIZE C2 | ISSUE 117

PRINTED IN U.S.A.

TABLE BX-1

CABLE DESIG	DROP POS	DROP LENGTH	BAY 5 SM NBR	BAY 4 SM NBR	BAY 3 SM NBR	BAY 2 SM NBR	BAY 1 SM NBR	BAY 0 SM NBR	CM2 SIDE "0" EQL
JL9	L	4-11	001	031	063	095	127	159	36-088-132
JL11		4-11	002	032	064	096	128	160	36-088-132
JL25		5-4	*	033	065	097	129	161	36-088-100
JL27		5-4	*	034	066	098	130	162	36-088-100
JL41		4-10	003	035	067	099	131	163	36-080-132
JL43		4-10	004	036	068	100	132	164	36-080-132
JL49		5-3	005	037	069	101	133	165	36-080-100
JL51		5-3	006	038	070	102	134	166	36-080-100
JL101		4-9	007	039	071	103	135	167	36-072-132
JL103		4-9	008	040	072	104	136	168	36-072-132
		5-2	009	041	073	105	137	169	36-072-100
		5-2	010	042	074	106	138	170	36-072-100
		4-8	011	043	075	107	139	171	36-064-132
		4-8	012	044	076	108	140	172	36-064-132
		5-1	013	045	077	109	141	173	36-064-100
		5-1	014	046	078	110	142	174	36-064-100
		4-7	015	047	079	111	143	175	36-056-132
		4-7	016	048	080	112	144	176	36-056-132
		5-0	017	049	081	113	145	177	36-056-100
		5-0	018	050	082	114	146	178	36-056-100
		4-6	019	051	083	115	147	179	36-048-132
		4-6	020	052	084	116	148	180	36-048-132
		4-11	021	053	085	117	149	181	36-048-100
		4-11	022	054	086	118	150	182	36-048-100
		4-5	023	055	087	119	151	183	36-040-132
		4-5	024	056	088	120	152	184	36-040-132
		4-10	025	057	089	121	153	185	36-040-100
		4-10	026	058	090	122	154	186	36-040-100
		4-4	027	059	091	123	155	187	36-032-132
		4-4	028	060	092	124	156	188	36-032-132
		4-9	029	061	093	125	157	189	36-032-100
		4-9	030	062	094	126	158	190	36-032-100

[211]

TABLE BX-2

CABLE DESIG	DROP POS	DROP LENGTH	BAY 6 SM NBR	BAY 7 SM NBR	BAY 8 SM NBR	BAY 9 SM NBR	BAY 10 SM NBR	BAY 11 SM NBR	CM2 SIDE "1" EQL
JL14	L	6-4	001	031	063	095	127	159	19-088-132
JL16		6-4	002	032	064	096	128	160	19-088-132
JL30		6-9	*	033	065	097	129	161	19-088-100
JL32		6-9	*	034	066	098	130	162	19-088-100
JL46		6-3	003	035	067	099	131	163	19-080-132
JL48		6-3	004	036	068	100	132	164	19-080-132
JL54		6-8	005	037	069	101	133	165	19-080-100
JL56		6-8	006	038	070	102	134	166	19-080-100
JL106		6-2	007	039	071	103	135	167	19-072-132
JL108		6-2	008	040	072	104	136	168	19-072-132
		6-7	009	041	073	105	137	169	19-072-100
		6-7	010	042	074	106	138	170	19-072-100
		6-1	011	043	075	107	139	171	19-064-132
		6-1	012	044	076	108	140	172	19-064-132
		6-6	013	045	077	109	141	173	19-064-100
		6-6	014	046	078	110	142	174	19-064-100
		6-0	015	047	079	111	143	175	19-056-132
		6-0	016	048	080	112	144	176	19-056-132
		6-5	017	049	081	113	145	177	19-056-100
		6-5	018	050	082	114	146	178	19-056-100
		5-11	019	051	083	115	147	179	19-048-132
		5-11	020	052	084	116	148	180	19-048-132
		6-4	021	053	085	117	149	181	19-048-100
		6-4	022	054	086	118	150	182	19-048-100
		5-10	023	055	087	119	151	183	19-040-132
		5-10	024	056	088	120	152	184	19-040-132
		6-3	025	057	089	121	153	185	19-040-100
		6-3	026	058	090	122	154	186	19-040-100
		5-9	027	059	091	123	155	187	19-032-132
		5-9	028	060	092	124	156	188	19-032-132
		6-2	029	061	093	125	157	189	19-032-100
		6-2	030	062	094	126	158	190	19-032-100

TABLE BX-3

CABLE DESIG	DROP POS	DROP LENGTH	BAY 6 SM NBR	BAY 7 SM NBR	BAY 8 SM NBR	BAY 9 SM NBR	BAY 10 SM NBR	BAY 11 SM NBR	CM2 SIDE "1" EQL
JL10	L	4-11	001	031	063	095	127	159	36-088-132
JL12		4-11	002	032	064	096	128	160	36-088-132
JL26		5-4	*	033	065	097	129	161	36-088-100
JL28		5-4	*	034	066	098	130	162	36-088-100
JL42		4-10	003	035	067	099	131	163	36-080-132
JL44		4-10	004	036	068	100	132	164	36-080-132
JL50		5-3	005	037	069	101	133	165	36-080-100
JL52		5-3	006	038	070	102	134	166	36-080-100
JL102		4-9	007	039	071	103	135	167	36-072-132
JL104		4-9	008	040	072	104	136	168	36-072-132
		5-2	009	041	073	105	137	169	36-072-100
		5-2	010	042	074	106	138	170	36-072-100
		4-8	011	043	075	107	139	171	36-064-132
		4-8	012	044	076	108	140	172	36-064-132
		5-1	013	045	077	109	141	173	36-064-100
		5-1	014	046	078	110	142	174	36-064-100
		4-7	015	047	079	111	143	175	36-056-132
		4-7	016	048	080	112	144	176	36-056-132
		5-0	017	049	081	113	145	177	36-056-100
		5-0	018	050	082	114	146	178	36-056-100
		4-6	019	051	083	115	147	179	36-048-132
		4-6	020	052	084	116	148	180	36-048-132
		4-11	021	053	085	117	149	181	36-048-100
		4-11	022	054	086	118	150	182	36-048-100
		4-5	023	055	087	119	151	183	36-040-132
		4-5	024	056	088	120	152	184	36-040-132
		4-10	025	057	089	121	153	185	36-040-100
		4-10	026	058	090	122	154	186	36-040-100
		4-4	027	059	091	123	155	187	36-032-132
		4-4	028	060	092	124	156	188	36-032-132
		4-9	029	061	093	125	157	189	36-032-100
		4-9	030	062	094	126	158	190	36-032-100

COPYRIGHT @ 2001 LUCENT TECHNOLOGIES
ALL RIGHTS RESERVED

BT13

INTERCABINET CABLING
FOR
5ESS * SWITCH
*LUCENT TRADEMARK

DWG SIZE C2 | ISSUE 117

PRINTED IN U.S.A.

TABLE BY

REF ASSIGNMENT AND CABLE MEASUREMENT [215]						
CABLE DESIG	REF	RCU "0" SIDE EQL	RCU "0" SIDE JACK DESIG	CA RACK DROP POS	CA RACK DROP LENGTH	PAL'ZD DROP LENGTH
JR355	1	( )-056	J1-0	L	4-0	6-1
	2	( )-056	J2-0		3-5	5-8
	3	( )-056	J3-0		3-10	6-0
	4	( )-056	J4-0		3-7	5-9
	5	( )-034	J5-0		3-9	5-11
	6	( )-034	J6-0		3-2	5-6
	7	( )-034	J7-0		3-7	5-10
	8	( )-034	J8-0		3-4	5-7
CABLE DESIG	REF	RCU "1" SIDE EQL	RCU "1" SIDE JACK DESIG	CA RACK DROP POS	CA RACK DROP LENGTH	PAL'ZD DROP LENGTH
JR356	1	( )-146	J1-1	R	3-9	5-11
	2	( )-146	J2-1		3-2	5-6
	3	( )-146	J3-1		3-7	5-10
	4	( )-146	J4-1		3-4	5-7
	5	( )-124	J5-1		4-0	6-2
	6	( )-124	J6-1		3-5	5-9
	7	( )-124	J7-1		3-10	6-1
	8	( )-124	J8-1		3-7	5-10

TABLE BZ

REF ASSIGNMENT & CABLE MEASUREMENT TO CMCU (CONN 2) CM2						
CABLE DESIG	REF	CM2 SIDE "0" EQL	CM2 SIDE "0" TERM	CA RACK DROP POS	CA RACK DROP LENGTH	PAL'ZD DROP LENGTH
JR351A OR JR351V	1	528-058	354	R	5-9	5-8
	2		307		6-5	5-0
	3		339		5-10	5-9
	4		322		6-6	5-1
	5	528-080	354		5-7	5-6
	6		307		6-3	4-10
	7		339		5-8	5-7
	8		322		6-4	4-11
JR371	1	528-058	354	R	5-9	5-8
JR127	2		307		6-5	5-0
	3		339		5-10	5-9
	4		322		6-6	5-1
CABLE DESIG	REF	CM2 SIDE "1" EQL	CM2 SIDE "1" TERM	CA RACK DROP POS	CA RACK DROP LENGTH	PAL'ZD DROP LENGTH
JR353A OR JR353V	1	628-058	354	R	5-9	5-8
	2		307		6-5	5-0
	3		339		5-10	5-9
	4		322		6-6	5-1
	5	628-080	354		5-7	5-6
	6		307		6-3	4-10
	7		339		5-8	5-7
	8		322		6-4	4-11
JR373	1	628-058	354		5-9	5-8
JR128	2		307		6-5	5-0
	3		339		5-10	5-9
	4		322		6-6	5-1

TABLE BZ1

REF ASSIGNMENT AND CABLE MEASUREMENT FROM DLTU-E (CONN 1)(ANN8B PACK)						
CABLE DESIG	UNIT POS	DLTU-E EQL	DLTU-E TERM	CA RACK DROP POS	CA RACK DROP LENGTH	PAL'ZD DROP LENGTH
	5	53-019			2-10	6-4
	6	62-019			2-1	7-11
	0	11-029			6-6	2-10
	1	19-029	116		5-9	3-7
	2	28-029			5-0	4-4
	3	36-029			4-4	5-0
	4	45-029			3-7	5-9
	5	53-029			2-11	6-5
	6	62-029			2-2	7-2
	0	11-039			6-7	2-11
	1	19-039	116		5-10	3-8
	2	28-039			5-1	4-5
	3	36-039			4-5	5-1
	4	45-039			3-8	5-10
	5	53-039			3-0	6-6
	6	62-039			2-3	7-3
	0	11-049			6-9	3-0
	1	19-049	116		6-0	3-9
	2	28-049			5-3	4-6
	3	36-049			4-7	5-2
	4	45-049			3-10	5-11
	5	53-049			3-2	6-7
	6	62-049			2-5	7-4
JR353A	0	11-019	113	L	6-5	2-9
	1	19-019			5-8	3-6
	2	28-019			4-11	4-3
	3	36-019			4-3	4-11
	4	45-019			3-6	5-8
	5	53-019			2-10	6-4
	6	62-019			2-1	7-1
	0	11-029			6-6	2-10
	1	19-029	113		5-9	3-7
	2	28-029			5-0	4-4
	3	36-029			4-4	5-0
	4	45-029			3-7	5-9

*** CONTINUED ***

** CONTINUED **

TABLE BZ1

REF ASSIGNMENT AND CABLE MEASUREMENT FROM DLTU-E (CONN 1)(ANN8B PACK)						
CABLE DESIG	UNIT POS	DLTU-E EQL	DLTU-E TERM	CA RACK DROP POS	CA RACK DROP LENGTH	PAL'ZD DROP LENGTH
JR351A	1	19-039	116	L	5-8	3-6
	2	28-039			4-11	4-3
	3	36-039			4-3	4-11
	4	45-039			3-6	5-8
	5	53-039			2-10	6-4
	6	62-039			2-1	7-11
	0	11-049			6-6	2-10
	1	19-049	116		5-9	3-7
	2	28-049			5-0	4-4
	3	36-049			4-4	5-0
	4	45-049			3-7	5-9
	5	53-049			2-11	6-5
	6	62-049			2-2	7-2
	0	11-019	113		6-7	2-11
	1	19-019			5-10	3-8
	2	28-019			5-1	4-5
	3	36-019			4-5	5-1
	4	45-019			3-8	5-10
	5	53-019			3-0	6-6
	6	62-019			2-3	7-3
	0	11-029			6-9	3-0
	1	19-029	113		6-0	3-9
	2	28-029			5-3	4-6
	3	36-029			4-7	5-2
	4	45-029			3-10	5-11
	5	53-029			3-2	6-7
	6	62-029			2-5	7-4

*** CONTINUED ***

** CONTINUED **

TABLE BZ1

REF ASSIGNMENT AND CABLE MEASUREMENT FROM DLTU-E (CONN 1)(ANN8B PACK)						
CABLE DESIG	UNIT POS	DLTU-E EQL	DLTU-E TERM	CA RACK DROP POS	CA RACK DROP LENGTH	PAL'ZD DROP LENGTH
	5	53-029			2-11	6-5
	6	62-029			2-2	7-2
	0	11-019			6-7	2-11
	1	19-039	113		5-10	3-8
	2	28-039			5-1	4-5
	3	36-039			4-5	5-1
	4	45-039			3-8	5-10
	5	53-039			3-0	6-6
	6	62-039			2-3	7-3
	0	11-049			6-9	3-0
	1	19-049	113		6-0	3-9
	2	28-049			5-3	4-6
	3	36-049			4-7	5-2
	4	45-049			3-10	5-11
	5	53-049			3-2	6-7
	6	62-049			2-5	7-4

TABLE BZ1A

REF ASSIGNMENT AND CABLE MEASUREMENT FROM DLTU-E (CONN 1)(ANN103 PACK)						
CABLE DESIG	UNIT POS	DLTU-E EQL	DLTU-E TERM	CA RACK DROP POS	CA RACK DROP LENGTH	PAL'ZD DROP LENGTH
	0	11-019			6-5	2-9
JR351V	1	19-019	115	L	5-8	3-6
	2	28-019			4-11	4-3
	3	36-019			4-3	4-11
	4	45-019			3-6	5-8
	5	53-019			2-10	6-4
	6	62-019			2-1	7-11
	0	11-029			6-6	2-10
	1	19-029	115		5-9	3-7
	2	28-029			5-0	4-4
	3	36-029			4-4	5-0
	4	45-029			3-7	5-9
	5	53-029			2-11	6-5
	6	62-029			2-2	7-2

*** CONTINUED ***

COPYRIGHT @ 2001 LUCENT TECHNOLOGIES
ALL RIGHTS RESERVED

BT13

INTERCABINET CABLING
FOR
5ESS * SWITCH
*LUCENT TRADEMARK

DWG SIZE C2 | ISSUE 117

LUCENT TECHNOLOGIES INC | ED5D500-21 | SHEET D49 OF 292

PRINTED IN U.S.A.

** CONTINUED **
TABLE BZ1A

	0	11-039			6-7	2-11
	1	19-039	115		5-10	3-8
	2	28-039			5-1	4-5
	3	36-039			4-5	5-1
	4	45-039			3-8	5-10
	5	53-039			3-0	6-6
	6	62-039			2-3	7-3
	0	11-049			6-9	3-0
	1	19-049	115		6-0	3-9
	2	28-049			5-3	4-6
	3	36-049			4-7	5-2
	4	45-049			3-10	5-11
	5	53-049			3-2	6-7
	6	62-049			2-5	7-4
JR353V	0	11-019	103	L	6-5	2-9
	1	19-019			5-8	3-6
	2	28-019			4-11	4-3
	3	36-019			4-3	4-11
	4	45-019			3-6	5-8
	5	53-019			2-10	6-4
	6	62-019			2-1	7-1
	0	11-029			6-6	2-10
	1	19-029	103		5-9	3-7
	2	28-029			5-0	4-4
	3	36-029			4-4	5-0
	4	45-029			3-7	5-9
	5	53-029			2-11	6-5
	6	62-029			2-2	7-2
	0	11-039			6-7	2-11
	1	19-039	103		5-10	3-8
	2	28-039			5-1	4-5
	3	36-039			4-5	5-1
	4	45-039			3-8	5-10
	5	53-039			3-0	6-6
	6	62-039			2-3	7-3
	0	11-049			6-9	3-0
	1	19-049	103		6-0	3-9
	2	28-049			5-3	4-6
	3	36-049			4-7	5-2
	4	45-049			3-10	5-11

*** CONTINUED ***

** CONTINUED **
TABLE BZ1A

	5	53-049			3-2	6-7
	6	62-049			2-5	7-4

TABLE BZ2

REF ASSIGNMENT AND CABLE MEASUREMENT						
FROM DLTU-3 (CONN 1)						
CABLE DESIG	UNIT POS	DLTU-3 EQL	TERM	CA POS	RACK DROP LENGTH	PAL'ZD DROP LENGTH
	0	11-014			6-5	2-9
JR371	1	19-014	300	L	5-8	3-6
	2	28-014			4-11	4-3
	3	36-014			4-3	4-11
	4	45-014			3-6	5-8
	5	53-014			2-10	6-4
	6	62-014			2-1	7-11
	0	11-022			6-6	2-10
	1	19-022	300		5-9	3-7
	2	28-022			5-0	4-4
	3	36-022			4-4	5-0
	4	45-022			3-7	5-9
	5	53-022			2-11	6-5
	6	62-022			2-2	7-2
	0	11-030			6-7	2-11
	1	19-030	300		5-10	3-8
	2	28-030			5-1	4-5
	3	36-030			4-5	5-1
	4	45-030			3-8	5-10
	5	53-030			3-0	6-6
	6	62-030			2-3	7-3
	0	11-038			6-9	3-0
	1	19-038	300		6-0	3-9
	2	28-038			5-3	4-6
	3	36-038			4-7	5-2
	4	45-038			3-10	5-11
	5	53-038			3-2	6-7
	6	62-038			2-5	7-4
JR373	0	11-014	100	L	6-5	2-9
	1	19-014			5-8	3-6
	2	28-014			4-11	4-3
	3	36-014			4-3	4-11

*** CONTINUED ***

** CONTINUED **
TABLE BZ2

	4	45-014			3-6	5-8
	5	53-014			2-10	6-4
	6	62-014			2-1	7-1
	0	11-022			6-6	2-10
	1	19-022	100		5-9	3-7
	2	28-022			5-0	4-4
	3	36-022			4-4	5-0
	4	45-022			3-7	5-9
	5	53-022			2-11	6-5
	6	62-022			2-2	7-2
	0	11-030			6-7	2-11
	1	19-030	100		5-10	3-8
	2	28-030			5-1	4-5
	3	36-030			4-5	5-1
	4	45-030			3-8	5-10
	5	53-030			3-0	6-6
	6	62-030			2-3	7-3
	0	11-038			6-9	3-0
	1	19-038	100		6-0	3-9
	2	28-038			5-3	4-6
	3	36-038			4-7	5-2
	4	45-038			3-10	5-11
	5	53-038			3-2	6-7
	6	62-038			2-5	7-4

TABLE CA

NCT LINKS FROM MCTU2 TO TMS (CM1)								
G4B	JL7		JL5		JL8		JL6	
NCT LINK	0A		0B		1A		1B	
SM() SMC1	XMTR	REC	XMTR	REC	XMTR	REC	XMTR	REC
G4B MCTU2 J5D003LA	119-156-332	119-156-345	119-156-313	119-156-300	128-156-332	128-156-345	128-156-313	128-156-300
SM1-30	TMS PORTS							
	REC	XMTR	REC	XMTR	REC	XMTR	REC	XMTR
	145	132	145	132	145	132	145	132
SM 1	053-062-145	053-062-132	028-062-145	028-062-132	153-062-145	153-062-132	128-062-145	128-062-132
SM 2	053-062-100	053-062-113	028-062-100	028-062-113	153-062-100	153-062-113	128-062-100	128-062-113
SM 3	053-052-	053-052-	028-052-	028-052-	153-052-	153-052-	128-052-	128-052-
SM 4	053-052-100	053-052-113	028-052-100	028-052-113	153-052-100	153-052-113	128-052-100	128-052-113
SM 5	053-042-145	053-042-132	028-042-145	028-042-132	153-042-145	153-042-132	128-042-145	128-042-132
SM 6	053-042-100	053-042-113	028-042-100	028-042-113	153-042-100	153-042-113	128-042-100	128-042-113
SM 7	053-126-145	053-126-132	028-126-145	028-126-132	153-126-145	153-126-132	128-126-145	128-126-132
SM 8	053-126-100	053-126-113	028-126-100	028-126-113	153-126-100	153-126-113	128-126-100	128-126-113
SM 9	053-136-145	053-136-132	028-136-145	028-136-132	153-136-145	153-136-132	128-136-145	128-136-132
SM 10	053-136-100	053-136-113	028-136-100	028-136-113	153-136-100	153-136-113	128-136-100	128-136-113
SM 11	053-146-145	053-146-132	028-146-145	028-146-132	153-146-145	153-146-132	128-146-145	128-146-132
SM 12	053-146-100	053-146-113	028-146-100	028-146-113	153-146-100	153-146-113	128-146-100	128-146-113
SM 13	053-156-145	053-156-132	028-156-145	028-156-132	153-156-145	153-156-132	128-156-145	128-156-132
SM 14	053-156-100	053-156-113	028-156-100	028-156-113	153-156-100	153-156-113	128-156-100	128-156-113
SM 15	045-072-145	045-072-132	019-072-145	019-072-132	145-072-145	145-072-132	119-072-145	119-072-132
SM 16	045-072-100	045-072-113	019-072-100	019-072-113	145-072-100	145-072-113	119-072-100	119-072-113
SM 17	045-062-145	045-062-132	019-062-145	019-062-132	145-062-145	145-062-132	119-062-145	119-062-132
SM 18	045-062-100	045-062-113	019-062-100	019-062-113	145-062-100	145-062-113	119-062-100	119-062-113

*** CONTINUED ***

COPYRIGHT @ 2001 LUCENT TECHNOLOGIES
ALL RIGHTS RESERVED

** CONTINUED **
TABLE CA

NCT LINKS FROM MCTU2 TO TMS (CM1)								
G4B	JL7		JL5		JL8		JL6	
NCT LINK	0A		0B		1A		1B	
SM() SMC1	XMTR	REC	XMTR	REC	XMTR	REC	XMTR	REC
G4B	119-156-332	119-156-345	119-156-313	119-156-300	128-156-332	128-156-345	128-156-313	128-156-300
MCTU2								
J5D003LA								
SM1-30	TMS PORTS							
	REC	XMTR	REC	XMTR	REC	XMTR	REC	XMTR
SM 19	045-052-145	045-052-132	019-052-145	019-052-132	145-052-145	145-052-132	119-052-145	119-052-132
SM 20	045-052-100	045-052-113	019-052-100	019-052-113	145-052-100	145-052-113	119-052-100	119-052-113
SM 21	045-042-145	045-042-132	019-042-145	019-042-132	145-042-145	145-042-132	119-042-145	119-042-132
SM 22	045-042-100	045-042-113	019-042-100	019-042-113	145-042-100	145-042-113	119-042-100	119-042-113
SM 23	045-126-145	045-126-132	019-126-145	019-126-132	145-126-145	145-126-132	119-126-145	119-126-132
SM 24	045-126-100	045-126-113	019-126-100	019-126-113	145-126-100	145-126-113	119-126-100	119-126-113
SM 25	045-136-145	045-136-132	019-136-145	019-136-132	145-136-145	145-136-132	119-136-145	119-136-132
SM 26	045-136-100	045-136-113	019-136-100	019-136-113	145-136-100	145-136-113	119-136-100	119-136-113
SM 27	045-146-145	045-146-132	019-146-145	019-146-132	145-146-145	145-146-132	119-146-145	119-146-132
SM 28	045-146-100	045-146-113	019-146-100	019-146-113	145-146-100	145-146-113	119-146-100	119-146-113
SM 29	045-156-145	045-156-132	019-156-145	019-156-132	145-156-145	145-156-132	119-156-145	119-156-132
SM 30	045-156-100	045-156-113	019-156-100	019-156-113	145-156-100	145-156-113	119-156-100	119-156-113

TABLE CA 2

TRCU (ORM 2MI+) NCT LINKS FROM TRCU TO TMS (CM1)								
G8	JL33		JL35		JL34		JL36	
G9	JL37		JL39		JL38		JL40	
NCT LINK	0A		0B		1A		1B	
SM() SMC 1	XMTR	REC	XMTR	REC	XMTR	REC	XMTR	REC
G8 M() HOST TRCU 1ST CKT J5D003ED	( )-066-132	( )-066-145	( )-082-132	( )-082-145	( )-114-132	( )-114-145	( )-130-132	( )-130-145
G9 M() HOST TRCU 2ND CKT J5D003ED	( )-026-132	( )-026-145	( )-042-132	( )-042-145	( )-154-132	( )-154-145	( )-170-132	( )-170-145
SM 1-30	TMS PORTS							
	REC	XMTR	REC	XMTR	REC	XMTR	REC	XMTR
SM 1	053-062-145	053-062-132	028-062-145	028-062-132	153-062-145	153-062-132	128-062-145	128-062-132
SM 2	053-062-100	053-062-113	028-062-100	028-062-113	153-062-100	153-062-113	128-062-100	128-062-113
SM 3	053-052-145	053-052-132	028-052-145	028-052-132	153-052-145	153-052-132	128-052-145	128-052-132
SM 4	053-052-100	053-052-113	028-052-100	028-052-113	153-052-100	153-052-113	128-052-100	128-052-113
SM 5	053-042-145	053-042-132	028-042-145	028-042-132	153-042-145	153-042-132	128-042-145	128-042-132
SM 6	053-042-100	053-042-113	028-042-100	028-042-113	153-042-100	153-042-113	128-042-100	128-042-113
SM 7	053-126-145	053-126-132	028-126-145	028-126-132	153-126-145	153-126-132	128-126-145	128-126-132
SM 8	053-126-100	053-126-113	028-126-100	028-126-113	153-126-100	153-126-113	128-126-100	128-126-113
SM 9	053-136-145	053-136-132	028-136-145	028-136-132	153-136-145	153-136-132	128-136-145	128-136-132
SM 10	053-136-100	053-136-113	028-136-100	028-136-113	153-136-100	153-136-113	128-136-100	128-136-113
SM 11	053-146-145	053-146-132	028-146-145	028-146-132	153-146-145	153-146-132	128-146-145	128-146-132
SM 12	053-146-100	053-146-113	028-146-100	028-146-113	153-146-100	153-146-113	128-146-100	128-146-113
SM 13	053-156-145	053-156-132	028-156-145	028-156-132	153-156-145	153-156-132	128-156-145	128-156-132
SM 14	053-156-	053-156-	028-156-	028-156-	153-156-	153-156-	128-156-	128-156-

*** CONTINUED ***

** CONTINUED **
TABLE CA 2

TRCU (ORM 2MI+) NCT LINKS FROM TRCU TO TMS (CM1)								
G8	JL33		JL35		JL34		JL36	
G9	JL37		JL39		JL38		JL40	
NCT LINK	0A		0B		1A		1B	
SM() SMC 1	XMTR	REC	XMTR	REC	XMTR	REC	XMTR	REC
G8 M() HOST TRCU 1ST CKT J5D003ED	( )-066-132	( )-066-145	( )-082-132	( )-082-145	( )-114-132	( )-114-145	( )-130-132	( )-130-145
G9 M() HOST TRCU 2ND CKT J5D003ED	( )-026-132	( )-026-145	( )-042-132	( )-042-145	( )-154-132	( )-154-145	( )-170-132	( )-170-145
SM 1-30	TMS PORTS							
	REC	XMTR	REC	XMTR	REC	XMTR	REC	XMTR
	100	113	100	113	100	113	100	113
SM 15	045-072-145	045-072-132	019-072-145	019-072-132	145-072-145	145-072-132	119-072-145	119-072-132
SM 16	045-072-100	045-072-113	019-072-100	019-072-113	145-072-100	145-072-113	119-072-100	119-072-113
SM 17	045-062-145	045-062-132	019-062-145	019-062-132	145-062-145	145-062-132	119-062-145	119-062-132
SM 18	045-062-100	045-062-113	019-062-100	019-062-113	145-062-100	145-062-113	119-062-100	119-062-113
SM 19	045-052-145	045-052-132	019-052-145	019-052-132	145-052-145	145-052-132	119-052-145	119-052-132
SM 20	045-052-100	045-052-113	019-052-100	019-052-113	145-052-100	145-052-113	119-052-100	119-052-113
SM 21	045-042-145	045-042-132	019-042-145	019-042-132	145-042-145	145-042-132	119-042-145	119-042-132
SM 22	045-042-100	045-042-113	019-042-100	019-042-113	145-042-100	145-042-113	119-042-100	119-042-113
SM 23	045-126-145	045-126-132	019-126-145	019-126-132	145-126-145	145-126-132	119-126-145	119-126-132
SM 24	045-126-100	045-126-113	019-126-100	019-126-113	145-126-100	145-126-113	119-126-100	119-126-113
SM 25	045-136-145	045-136-132	019-136-145	019-136-132	145-136-145	145-136-132	119-136-145	119-136-132
SM 26	045-136-100	045-136-113	019-136-100	019-136-113	145-136-100	145-136-113	119-136-100	119-136-113
SM 27	045-146-145	045-146-132	019-146-145	019-146-132	145-146-145	145-146-132	119-146-145	119-146-132
SM 28	045-146-100	045-146-113	019-146-100	019-146-113	145-146-100	145-146-113	119-146-100	119-146-113
SM 29	045-156-145	045-156-132	019-156-145	019-156-132	145-156-145	145-156-132	119-156-145	119-156-132
SM 30	045-156-100	045-156-113	019-156-100	019-156-113	145-156-100	145-156-113	119-156-100	119-156-113

** CONTINUED **
TABLE CA 2

TRCU (ORM 2MI+) NCT LINKS FROM TRCU TO TMS (CM1)								
G8	JL33		JL35		JL34		JL36	
G9	JL37		JL39		JL38		JL40	
NCT LINK	0A		0B		1A		1B	
SM() SMC 1	XMTR	REC	XMTR	REC	XMTR	REC	XMTR	REC
G8 M() HOST TRCU 1ST CKT J5D003ED	( )-066-132	( )-066-145	( )-082-132	( )-082-145	( )-114-132	( )-114-145	( )-130-132	( )-130-145
G9 M() HOST TRCU 2ND CKT J5D003ED	( )-026-132	( )-026-145	( )-042-132	( )-042-145	( )-154-132	( )-154-145	( )-170-132	( )-170-145
SM 1-30	TMS PORTS							
	REC	XMTR	REC	XMTR	REC	XMTR	REC	XMTR
SM 28	045-146-100	045-146-113	019-146-100	019-146-113	145-146-100	145-146-113	119-146-100	119-146-113
SM 29	045-156-145	045-156-132	019-156-145	019-156-132	145-156-145	145-156-132	119-156-145	119-156-132
SM 30	045-156-100	045-156-113	019-156-100	019-156-113	145-156-100	145-156-113	119-156-100	119-156-113

COPYRIGHT @ 2001 LUCENT TECHNOLOGIES
ALL RIGHTS RESERVED

BT13

INTERCABINET CABLING
FOR
5ESS * SWITCH
*LUCENT TRADEMARK

DWG SIZE C2 | ISSUE 117

LUCENT TECHNOLOGIES INC | ED5D500-21 | SHEET D51 OF 292

PRINTED IN U.S.A.

TABLE CC

	MMSU		PERIPHERAL UNITS								[300-302]
	MA		J5D003AG (ATU-E) SN560		J5D004AC (LU2) J5D004AD (LU3) J5D004AE (LU2-E)		J5D003AC (TU) OR J5D003AG (ATU-E)				
	J1	J2	CABLE ASSY ED5D503-30 GROUP	CABLE DESIG	CABLE ASSY ED-5D503-30 GROUP	CABLE DESIG	CABLE ASSY ED-5D503-30 GROUP	CABLE DESIG	DROP LENGTH	POS	REMARKS
	SG0 EQL	SG1 EQL									
PORT (MTB) SEE NOTE AT BOTTOM OF TABLE			BASIC, GROWTH 1,2 OR 3								
0	( )-030-100	( )-118-100	33A	JR33A	20	JR20	33	JR33	SEE	L	SEE
1	-103	-103	33A	JR33A	20	JR20	33	JR33	TBL	|	NOTES
2	-106	-106	33A	JR33A	20	JR20	33	JR33	DA &	|	75,76,
3	-109	-109	33A	JR33A	20	JR20	33	JR33	DB	|	77,78,
4	-113	-113	33A	JR33A	20	JR20	33	JR33		|	83
5	-116	-116	33A	JR33A	20	JR20	33	JR33		|	
6	-119	-119	33A	JR33A	20	JR20	33	JR33		|	
7	-122	-122	33A	JR33A	20	JR20	33	JR33		|	
8	-132	-132	34A	JR34A	20	JR20	34	JR34		R	
9	-135	-135	34A	JR34A	20	JR20	34	JR34		|	
10	-138	-138	34A	JR34A	20	JR20	34	JR34		|	
11	-141	-141	34A	JR34A	20	JR20	34	JR34		|	
12	-145	-145	34A	JR34A	20	JR20	34	JR34		|	
13	-148	-148	34A	JR34A	20	JR20	34	JR34		|	
14	-151	-151	34A	JR34A	20	JR20	34	JR34		|	
15	-154	-154	-	-	42	JR42	42	JR42		|	

	MA		CP SN107		J1P023AM (DCTU)		J5D002A (TAU)				
	J1	J2	CABLE ASSY ED-5D503-30 GROUP	CABLE DESIG	CABLE ASSY ED-5D503-30 GROUP	CABLE DESIG	CABLE ASSY ED-5D503-30 GROUP	CABLE DESIG	DROP LENGTH	POS	REMARKS
	SG0 EQL	SG1 EQL									
PORT (MTB) SEE NOTE AT BOTTOM OF TABLE			BASIC, GROWTH 1,2 OR 3								
0	( )-030-100	( )-118-100	35	JR35	37	JR37	39	JR39	SEE	L	SEE
1	-103	-103					39	JR39	TBL	|	NOTES
2	-106	-106	35	JR35	37	JR37	39	JR39	DA &	|	75,76,
3	-109	-109					39	JR39	DB	|	77,78,
4	-113	-113	35	JR35	37	JR37	39	JR39		|	83
5	-116	-116					39	JR39		|	
6	-119	-119	35	JR35	37	JR37	39	JR39		|	
7	-122	-122					39	JR39		|	
8	-132	-132	36	JR36	38	JR38	40	JR40		R	
9	-135	-135					40	JR40		|	
10	-138	-138	36	JR36	38	JR38	40	JR40		|	
11	-141	-141					40	JR40		|	
12	-145	-145	36	JR36	38	JR38	40	JR40		|	
13	-148	-148					40	JR40		|	
14	-151	-151	--	----	--	----	40	JR40		|	
15	-154	-154	42	JR42	42	JR42	42	JR42		|	

	MA		J5D003AG (ATU-E) SN560		J5D004AC (LU2) J5D004AD (LU3) J5D004AE (LU2-E)		J5D003AC (TU) OR J5D003AG (ATU-E)				
	J1	J2	CABLE ASSY ED5D503-30 GROUP	CABLE DESIG	CABLE ASSY ED-5D503-30 GROUP	CABLE DESIG	CABLE ASSY ED-5D503-30 GROUP	CABLE DESIG	DROP LENGTH	POS	REMARKS
	SG0 EQL	SG1 EQL									
PORT (MTB) SEE NOTE AT BOTTOM OF TABLE			BASIC, GROWTH 1,2 OR 3								
0	( )-038-100	( )-126-100	33A	JR33A	20	JR20	33	JR33	SEE	L	SEE
1	-103	-103	33A	JR33A	20	JR20	33	JR33	TBL	|	NOTES
2	-106	-106	33A	JR33A	20	JR20	33	JR33	DA &	|	75,76,
3	-109	-109	33A	JR33A	20	JR20	33	JR33	DB	|	77,78
4	-113	-113	33A	JR33A	20	JR20	33	JR33		|	83
5	-116	-116	33A	JR33A	20	JR20	33	JR33		|	
6	-119	-119	33A	JR33A	20	JR20	33	JR33		|	
7	-122	-122	33A	JR33A	20	JR20	33	JR33		|	
8	-132	-132	34A	JR34A	20	JR20	34	JR34		R	
9	-135	-135	34A	JR34A	20	JR20	34	JR34		|	
10	-138	-138	34A	JR34A	20	JR20	34	JR34		|	
11	-141	-141	34A	JR34A	20	JR20	34	JR34		|	
12	-145	-145	34A	JR34A	20	JR20	34	JR34		|	
13	-148	-148	34A	JR34A	20	JR20	34	JR34		|	

*** CONTINUED ***

** CONTINUED **
TABLE CC

	MMSU		PERIPHERAL UNITS								[300-302]
14	-151	-151	34A	JR34A	20	JR20	34	JR34			
15	-154	-154	-	-	42	JR42	42	JR42		|	

	MA		CP SN107		J1P023AM (DCTU)		J5D002A (TAU)				
	J1	J2	CABLE ASSY ED-5D503-30 GROUP	CABLE DESIG	CABLE ASSY ED-5D503-30 GROUP	CABLE DESIG	CABLE ASSY ED-5D503-30 GROUP	CABLE DESIG	DROP LENGTH	POS	REMARKS
	SG0 EQL	SG1 EQL									
PORT (MTB) SEE NOTE AT BOTTOM OF TABLE			BASIC, GROWTH 1,2 OR 3								
0	( )-038-100	( )-126-100	35	JR35	37	JR37	39	JR39	SEE	L	SEE
1	-103	-103					39	JR39	TBL	|	NOTES
2	-106	-106	35	JR35	37	JR37	39	JR39	DA &	|	75,76,
3	-109	-109					39	JR39	DB	|	77,78,
4	-113	-113	35	JR35	37	JR37	39	JR39		|	83
5	-116	-116					39	JR39		|	
6	-119	-119	35	JR35	37	JR37	39	JR39		|	
7	-122	-122					39	JR39		|	
8	-132	-132	36	JR36	38	JR38	40	JR40		R	
9	-135	-135					40	JR40		|	
10	-138	-138	36	JR36	38	JR38	40	JR40		|	
11	-141	-141					40	JR40		|	
12	-145	-145	36	JR36	38	JR38	40	JR40		|	
13	-148	-148					40	JR40		|	
14	-151	-151	--	----	--	----	40	JR40		|	
15	-154	-154	42	JR42	42	JR42	42	JR42		|	

	MA		J5D003AG (ATU-E) SN560		J5D004AC (LU2) J5D004AD (LU3) J5D004AE (LU2-E)		J5D003AC (TU) OR J5D003AG (ATU-E)				
	J1	J2	CABLE ASSY ED5D503-30 GROUP	CABLE DESIG	CABLE ASSY ED-5D503-30 GROUP	CABLE DESIG	CABLE ASSY ED-5D503-30 GROUP	CABLE DESIG	DROP LENGTH	POS	REMARKS
	SG0 EQL	SG1 EQL									
PORT (MTB) SEE NOTE AT BOTTOM OF TABLE			BASIC, GROWTH 1,2 OR 3								
0	( )-046-100	( )-134-100	33A	JR33A	20	JR20	33	JR33	SEE	L	SEE
1	-103	-103	33A	JR33A	20	JR20	33	JR33	TBL	|	NOTES
2	-106	-106	33A	JR33A	20	JR20	33	JR33	DA &	|	75,76,
3	-109	-109	33A	JR33A	20	JR20	33	JR33	DB	|	77,78,
4	-113	-113	33A	JR33A	20	JR20	33	JR33		|	83
5	-116	-116	33A	JR33A	20	JR20	33	JR33		|	
6	-119	-119	33A	JR33A	20	JR20	33	JR33		|	
7	-122	-122	33A	JR33A	20	JR20	33	JR33		|	
8	-132	-132	34A	JR34A	20	JR20	34	JR34		R	
9	-135	-135	34A	JR34A	20	JR20	34	JR34		|	
10	-138	-138	34A	JR34A	20	JR20	34	JR34		|	
11	-141	-141	34A	JR34A	20	JR20	34	JR34		|	
12	-145	-145	34A	JR34A	20	JR20	34	JR34		|	
13	-148	-148	34A	JR34A	20	JR20	34	JR34		|	
14	-151	-151	34A	JR34A	20	JR20	34	JR34		|	
15	-154	-154	-	-	42	JR42	42	JR42		|	

	MA		CP SN107		J1P023AM (DCTU)		J5D002A (TAU)				
	J1	J2	CABLE ASSY ED-5D503-30 GROUP	CABLE DESIG	CABLE ASSY ED-5D503-30 GROUP	CABLE DESIG	CABLE ASSY ED-5D503-30 GROUP	CABLE DESIG	DROP LENGTH	POS	REMARKS
	SG0 EQL	SG1 EQL									
PORT (MTB) SEE NOTE AT BOTTOM OF TABLE			BASIC, GROWTH 1,2 OR 3								
0	( )-046-100	( )-134-100	35	JR35	37	JR37	39	JR39	SEE	L	SEE
1	-103	-103					39	JR39	TBL	|	NOTES
2	-106	-106	35	JR35	37	JR37	39	JR39	DA &	|	75,76,
3	-109	-109					39	JR39	DB	|	77,78,
4	-113	-113	35	JR35	37	JR37	39	JR39		|	83
5	-116	-116					39	JR39		|	
6	-119	-119	35	JR35	37	JR37	39	JR39		|	
7	-122	-122					39	JR39		|	
8	-132	-132	36	JR36	38	JR38	40	JR40		R	
9	-135	-135					40	JR40		|	
10	-138	-138	36	JR36	38	JR38	40	JR40		|	
11	-141	-141					40	JR40		|	
12	-145	-145	36	JR36	38	JR38	40	JR40		|	

*** CONTINUED ***

COPYRIGHT @ 2001 LUCENT TECHNOLOGIES
ALL RIGHTS RESERVED

BT13

INTERCABINET CABLING
FOR
5ESS * SWITCH
*LUCENT TRADEMARK

DWG SIZE C2 | ISSUE 117

PRINTED IN U.S.A.

** CONTINUED **
TABLE CC

MMSU	PERIPHERAL UNITS							[300-302]
13	-148	-148					40	JR40
14	-151	-151	--	----	--	----	40	JR40
15	-154	-154	42	JR42	42	JR42	42	JR42

METALLIC ACCESS CIRCUIT PACKS (MA) PROVIDE
METALLIC TEST BUS (MTB) PORTS AS FOLLOWS:

MA EQL	MTB EQL
026	030
034	038
042	046
114	118
122	126
130	134

TABLE CC1

MMSU				J1P023AM (DCTU)				[303]
J1	J2	J3	J4	CABLE ASSY ED5D503-30 GROUP	CABLE DESIG	DROP LENGTH	POS	REMARKS
SG0 EQL	SG1 EQL	SG0 EQL	SG1 EQL					
PORT								
0	( )-030-100	( )-118-100	( )-030-100	( )-118-100	37A	JR37A	SEE	L	J1 & J2 LOCATED ON
1	-103	-103	-103	-103	37A	JR37A	TBL		FIRST SHELF
2	-106	-106	-106	-106	37A	JR37A	DA &		J3 & J4 LOCATED ON
3	-109	-109	-109	-109	37A	JR37A	DB		SECOND SHELF
4	-113	-113	-113	-113	37A	JR37A			
5	-116	-116	-116	-116	37A	JR37A			OR
6	-119	-119	-119	-119	37A	JR37A			
7	-122	-122	-122	-122	37A	JR37A			IF SINGLE SHELF
8	-132	-132	-132	-132	38A	JR38A		R	MMSU-J1,J2,J3 & J4
9	-135	-135	-135	-135	38A	JR38A			ARE LOCATED ON THAT
10	-138	-138	-138	-138	38A	JR38A			SHELF
11	-141	-141	-141	-141	38A	JR38A			
12	-145	-145	-145	-145	38A	JR38A			
13	-148	-148	-148	-148	38A	JR38A			
14	-151	-151	-151	-151	38A	JR38A			
15	-154	-154	-154	-154					
0	( )-038-100	( )-126-100	( )-038-100	( )-126-100	37A	JR37A	SEE	L	J1 & J2 LOCATED ON
1	-103	-103	-103	-103	37A	JR37A	TBL		FIRST SHELF
2	-106	-106	-106	-106	37A	JR37A	DA &		J3 & J4 LOCATED ON
3	-109	-109	-109	-109	37A	JR37A	DB		SECOND SHELF
4	-113	-113	-113	-113	37A	JR37A			
5	-116	-116	-116	-116	37A	JR37A			OR
6	-119	-119	-119	-119	37A	JR37A			
7	-122	-122	-122	-122	37A	JR37A			IF SINGLE SHELF
8	-132	-132	-132	-132	38A	JR38A		R	MMSU-J1,J2,J3 & J4
9	-135	-135	-135	-135	38A	JR38A			ARE LOCATED ON THAT
10	-138	-138	-138	-138	38A	JR38A			SHELF
11	-141	-141	-141	-141	38A	JR38A			
12	-145	-145	-145	-145	38A	JR38A			
13	-148	-148	-148	-148	38A	JR38A			
14	-151	-151	-151	-151	38A	JR38A			
15	-154	-154	-154	-154					
0	( )-046-100	( )-134-100	( )-046-100	( )-134-100	37A	JR37A	SEE	L	J1 & J2 LOCATED ON
1	-103	-103	-103	-103	37A	JR37A	TBL		FIRST SHELF
2	-106	-106	-106	-106	37A	JR37A	DA &		J3 & J4 LOCATED ON
3	-109	-109	-109	-109	37A	JR37A	DB		SECOND SHELF
4	-113	-113	-113	-113	37A	JR37A			
5	-116	-116	-116	-116	37A	JR37A			OR
6	-119	-119	-119	-119	37A	JR37A			
7	-122	-122	-122	-122	37A	JR37A			IF SINGLE SHELF
8	-132	-132	-132	-132	38A	JR38A		R	MMSU-J1.J2,J3 & J4
9	-135	-135	-135	-135	38A	JR38A			ARE LOCATED ON THAT
10	-138	-138	-138	-138	38A	JR38A			SHELF
11	-141	-141	-141	-141	38A	JR38A			
12	-145	-145	-145	-145	38A	JR38A			
13	-148	-148	-148	-148	38A	JR38A			
14	-151	-151	-151	-151	38A	JR38A			
15	-154	-154	-154	-154					

TABLE CC2

MMSU	PERIPHERAL UNIT						
MA		J5D004AN (LU4)					
J1	J2	CABLE ASSY ED5D708-34 GROUP	CABLE DESIG	DROP LENGTH	POS	REMARKS	
SG0 EQL	SG1 EQL						
PORT (MTB) SEE NOTE AT BOTTOM OF TABLE		BASIC, GROWTH 1,2 OR 3					
0	( )-030-100	( )-118-100	3	JR31A	SEE	L	SEE
1	-103	-103	3	JR31A	TBL		NOTES
2	-106	-106	3	JR31A	DA &		75,76,
3	-109	-109	3	JR31A	DB		77,78,

*** CONTINUED ***

COPYRIGHT @ 2001 LUCENT TECHNOLOGIES
ALL RIGHTS RESERVED

BT13

INTERCABINET CABLING
FOR
5ESS * SWITCH
*LUCENT TRADEMARK

DWG SIZE C2 | ISSUE 117

LUCENT TECHNOLOGIES INC | ED5D500-21 | SHEET D53 OF 292

PRINTED IN U.S.A.

** CONTINUED **

TABLE CC2

	MA		J5D004AN (LU4)				
	J1	J2	CABLE ASSY	CABLE	DROP	POS	REMARKS
	SG0 EQL	SG1 EQL	ED-5D708-34 GROUP	DESIG	LENGTH		
4	-113	-113	3	JR31A			83
5	-116	-116	3	JR31A			
6	-119	-119	3	JR31A			
7	-122	-122	3	JR31A			
8	-132	-132	4	JR32A		R	
9	-135	-135	4	JR32A			
10	-138	-138	4	JR32A			
11	-141	-141	4	JR32A			
12	-145	-145	4	JR32A			
13	-148	-148	4	JR32A			
14	-151	-151	4	JR32A			
15	-154	-154	-	-			

	MA		J5D004AN (LU4)				
	J1	J2	CABLE ASSY	CABLE	DROP	POS	REMARKS
	SG0 EQL	SG1 EQL	ED5D708-34 GROUP	DESIG	LENGTH		
PORT (MTB) SEE NOTE AT BOTTOM OF TABLE			BASIC, GROWTH 1,2 OR 3				
0	( )-046-100	( )-134-100	3	JR31A	SEE	L	SEE
1	-103	-103	3	JR31A	TBL		NOTES
2	-106	-106	3	JR31A	DA &		75,76,
3	-109	-109	3	JR31A	DB		77,78,
4	-113	-113	3	JR31A			83
5	-116	-116	3	JR31A			
6	-119	-119	3	JR31A			
7	-122	-122	3	JR31A			
8	-132	-132	4	JR32A		R	
9	-135	-135	4	JR32A			
10	-138	-138	4	JR32A			
11	-141	-141	4	JR32A			
12	-145	-145	4	JR32A			
13	-148	-148	4	JR32A			
14	-151	-151	4	JR32A			
15	-154	-154	--	-----			

METALLIC ACCESS CIRCUIT PACKS (MA) PROVIDE METALLIC TEST BUS (MTB) PORTS AS FOLLOWS:

MA EQL	MTB EQL
026	030
034	038
042	046
114	118
122	126
130	134

TABLE CC3

EQL ASSIGNMENT TABLE FOR J5D003BD MMSU UNIT [305]

SHELF	CONN	CONN	CABLE ASSY	CABLE	DROP	POS	REMARKS
			ED5D503-30 GROUP	DESIG	LENGTH		
1	J1,J2	J3,J4					
2	J5,J6	J7,J8					
3	J9,J10	J11,J12					
4	J13,J14	J15,J16					

	SG0 EQL	SG1 EQL					
PORT							
0	( )-030-100	( )-118-100	151	JR151	SEE	R	J1,J2,J3 & J4
1	-103	-103	OR	OR	TBL		LOCATED ON FIRST
2	-106	-106	152	JR152	CC4		SHELF.
3	-109	-109					J5,J6,J7 & J8
4	-113	-113					LOCATED ON SECOND
5	-116	-116					SHELF
6	-119	-119					J9,J10,J11 & J12
7	-122	-122					LOCATED ON THIRD
8	-132	-132					SHELF
9	-135	-135					J13,J14,J15 & J16
10	-138	-138					LOCATED ON FOURTH
11	-141	-141					SHELF.
12	-145	-145					TIE ALL UNUSED
13	-148	-148					CONNECTORS TO CABLE
14	-151	-151					SUPPORT.
15	-154	-154	THIS POSITION NOT ASSIGNED				
0	( )-038-100	( )-126-100					
1	-103	-103					
2	-106	-106					
3	-109	-109					
4	-113	-113					
5	-116	-116					
6	-119	-119					
7	-122	-122					
8	-132	-132					
9	-135	-135					
10	-138	-138					
11	-141	-141					
12	-145	-145					
13	-148	-148					
14	-151	-151					
15	-154	-154	THIS POSITION NOT ASSIGNED				
0	( )-046-100	( )-134-100					
1	-103	-103					
2	-106	-106					
3	-109	-109					
4	-113	-113					
5	-116	-116					
6	-119	-119					
7	-122	-122					
8	-132	-132					
9	-135	-135					
10	-138	-138					
11	-141	-141					
12	-145	-145					
13	-148	-148					
14	-151	-151					
15	-154	-154	THIS POSITION NOT ASSIGNED				

TABLE CC4

[306]

VERT EQL	FRAME POS	DROP DIM FROM CA RK SHIELD 3			DROP DIM FROM PALLET		
		CENTER OF UNIT			CENTER OF UNIT		
62	6	5′-6"			10′-5"		
53	5	6′-3"			9′-8"		
45	4	6′-11"			9′-0"		
36	3	7′-8"			8′-3"		
28	2	8′-4"			7′-7"		
19	1	9′-1"			6′-10"		
11	0	9′-10"			6′-1"		

COPYRIGHT @ 2001 LUCENT TECHNOLOGIES
ALL RIGHTS RESERVED

TABLE CC5

MMSU				ED5D896-30 (NTT)				
J1	J2	J3	J4	CABLE ASSY ED5D503-30 GROUP	CABLE DESIG	DROP LENGTH	POS	REMARKS
SG0 EQL	SG1 EQL	SG0 EQL	SG1 EQL					
PORT								
0 ( )-030-100	( )-118-100	( )-030-100	( )-118-100	75	NT005	SEE	L	J1 & J2 LOCATED ON
1 -103	-103	-103	-103			TBL		FIRST SHELF
2 -106	-106	-106	-106			DA &		J3 & J4 LOCATED ON
3 -109	-109	-109	-109			DB		SECOND SHELF
4 -113	-113	-113	-113					
5 -116	-116	-116	-116					OR
6 -119	-119	-119	-119					
7 -122	-122	-122	-122					IF SINGLE SHELF
8 -132	-132	-132	-132	76	NT006		R	MMSU-J1,J2,J3 & J4
9 -135	-135	-135	-135					ARE LOCATED ON THAT
10 -138	-138	-138	-138					SHELF
11 -141	-141	-141	-141					
12 -145	-145	-145	-145					
13 -148	-148	-148	-148					
14 -151	-151	-151	-151					
15 -154	-154	-154	-154					
0 ( )-038-100	( )-126-100	( )-038-100	( )-126-100	75	NT005	SEE	L	J1 & J2 LOCATED ON
1 -103	-103	-103	-103			TBL		FIRST SHELF
2 -106	-106	-106	-106			DA &		J3 & J4 LOCATED ON
3 -109	-109	-109	-109			DB		SECOND SHELF
4 -113	-113	-113	-113					
5 -116	-116	-116	-116					OR
6 -119	-119	-119	-119					
7 -122	-122	-122	-122					IF SINGLE SHELF
8 -132	-132	-132	-132	76	NT006		R	MMSU-J1,J2,J3 & J4
9 -135	-135	-135	-135					ARE LOCATED ON THAT
10 -138	-138	-138	-138					SHELF
11 -141	-141	-141	-141					
12 -145	-145	-145	-145					
13 -148	-148	-148	-148					
14 -151	-151	-151	-151					
15 -154	-154	-154	-154					
0 ( )-046-100	( )-134-100	( )-046-100	( )-134-100	75	NT005	SEE	L	J1 & J2 LOCATED ON
1 -103	-103	-103	-103			TBL		FIRST SHELF
2 -106	-106	-106	-106			DA &		J3 & J4 LOCATED ON
3 -109	-109	-109	-109			DB		SECOND SHELF
4 -113	-113	-113	-113					
5 -116	-116	-116	-116					OR
6 -119	-119	-119	-119					
7 -122	-122	-122	-122					IF SINGLE SHELF
8 -132	-132	-132	-132	76	NT006		R	MMSU-J1.J2,J3 & J4
9 -135	-135	-135	-135					ARE LOCATED ON THAT
10 -138	-138	-138	-138					SHELF
11 -141	-141	-141	-141					
12 -145	-145	-145	-145					
13 -148	-148	-148	-148					
14 -151	-151	-151	-151					
15 -154	-154	-154	-154					

TABLE CD

PERIPHERAL UNIT MTB REQUIREMENTS [308]						
EQUIPMENT	NBR OF MTB PER SG	SG 0 J3 EQL	SG 1 J4 EQL	CABLE ASSY ED-5D503-30	CABLE DESIG	REMARKS
J5D004AC LU2	1	(04)-096-322	13-096-322	G20	JR20	
J5D004AD LU3	1	(04)-084-322	13-084-322	G20	JR20	
J5D004AE LU2-E	1	(04)-096-322	13-096-322	G20	JR20	

*** CONTINUED ***

** CONTINUED **

TABLE CD

PERIPHERAL UNIT MTB REQUIREMENTS [308]						
EQUIPMENT	NBR OF MTB PER SG	SG 0 J3 EQL	SG 1 J4 EQL	CABLE ASSY ED-5D503-30	CABLE DESIG	REMARKS
J5D003AC TU	1	(04)-108-109		G33 OR G34	JR33 OR JR34	SG0 & SG1 MTB'S ARE INCLUDED IN J3
J5D003AG ATU-E	1	(04)-108-109		G33 OR G34	JR33 OR JR34	SG0 & SG1 MTB'S ARE INCLUDED IN J3
J5D003AG ATU-E SN560 (TLTT)	1	(04)-032-103		G33A OR G34A	JR33A OR JR34A	SG0 & SG1 MTB'S ARE INCLUDED IN J3
	1	(04)-040-103		G33A OR G34A	JR33A OR JR34A	SG0 & SG1 MTB'S ARE INCLUDED IN J3
	1	(04)-048-103		G33A OR G34A	JR33A OR JR34A	SG0 & SG1 MTB'S ARE INCLUDED IN J3
	1	(04)-056-103		G33A OR G34A	JR33A OR JR34A	SG0 & SG1 MTB'S ARE INCLUDED IN J3
	1	(04)-064-103		G33A OR G34A	JR33A OR JR34A	SG0 & SG1 MTB'S ARE INCLUDED IN J3
	1	(04)-072-103		G33A OR G34A	JR33A OR JR34A	SG0 & SG1 MTB'S ARE INCLUDED IN J3
	1	(04)-080-103		G33A OR G34A	JR33A OR JR34A	SG0 & SG1 MTB'S ARE INCLUDED IN J3
	1	(04)-088-103		G33A OR G34A	JR33A OR JR34A	SG0 & SG1 MTB'S ARE INCLUDED IN J3
	1	(04)-124-103		G33A OR G34A	JR33A OR JR34A	SG0 & SG1 MTB'S ARE INCLUDED IN J3
	1	(04)-132-103		G33A OR G34A	JR33A OR JR34A	SG0 & SG1 MTB'S ARE INCLUDED IN J3
	1	(04)-140-103		G33A OR G34A	JR33A OR JR34A	SG0 & SG1 MTB'S ARE INCLUDED IN J3
	1	(04)-148-103		G33A OR G34A	JR33A OR JR34A	SG0 & SG1 MTB'S ARE INCLUDED IN J3
	1	(04)-156-103		G33A OR G34A	JR33A OR JR34A	SG0 & SG1 MTB'S ARE INCLUDED IN J3
	1	(04)-164-103		G33A OR G34A	JR33A OR JR34A	SG0 & SG1 MTB'S ARE INCLUDED IN J3
	1	(04)-172-103		G33A OR G34A	JR33A OR JR34A	SG0 & SG1 MTB'S ARE INCLUDED IN J3
	1	(04)-180-103		G33A OR G34A	JR33A OR JR34A	SG0 & SG1 MTB'S ARE INCLUDED IN J3
SN107 TST TRUNK SN712 SN720	2	(04)-032-104		G35 OR G36	JR35 OR JR36	SG0 & SG1 MTB'S ARE INCLUDED IN J3
SN107 TST TRUNK SN712 SN720	2	(04)-040-104		G35 OR G36	JR35 OR JR36	SG0 & SG1 MTB'S ARE INCLUDED IN J3
SN107 TST TRUNK SN712 SN720	2	(04)-048-104		G35 OR G36	JR35 OR JR36	SG0 & SG1 MTB'S ARE INCLUDED IN J3
SN107 TST TRUNK SN712 SN720	2	(04)-056-104		G35 OR G36	JR35 OR JR36	SG0 & SG1 MTB'S ARE INCLUDED IN J3
SN107 TST TRUNK SN712	2	(04)-064-104		G35 OR G36	JR35 OR JR36	SG0 & SG1 MTB'S ARE INCLUDED IN J3

*** CONTINUED ***

COPYRIGHT @ 2001 LUCENT TECHNOLOGIES
ALL RIGHTS RESERVED

BT13

INTERCABINET CABLING
FOR
5ESS * SWITCH
*LUCENT TRADEMARK

DWG SIZE C2 | ISSUE 117

PRINTED IN U.S.A.

** CONTINUED **

TABLE CD

PERIPHERAL UNIT MTB REQUIREMENTS [308]

EQUIPMENT	NBR OF MTB PER SG	SG 0 J3 EQL	SG 1 J4 EQL	CABLE ASSY ED-5D503-30	CABLE DESIG	REMARKS
SN720						
SN107 TST TRUNK SN712 SN720	2	(04)-072-104		G35 OR G36	JR35 OR JR36	SG0 & SG1 MTB'S ARE INCLUDED IN J3
SN107 TST TRUNK SN712 SN720	2	(04)-080-104		G35 OR G36	JR35 OR JR36	SG0 & SG1 MTB'S ARE INCLUDED IN J3
SN107 TST TRUNK SN712 SN720	2	(04)-088-104		G35 OR G36	JR35 OR JR36	SG0 & SG1 MTB'S ARE INCLUDED IN J3
SN107 TST TRUNK SN712 SN720	2	(04)-124-104		G35 OR G36	JR35 OR JR36	SG0 & SG1 MTB'S ARE INCLUDED IN J3
SN107 TST TRUNK SN712 SN720	2	(04)-132-104		G35 OR G36	JR35 OR JR36	SG0 & SG1 MTB'S ARE INCLUDED IN J3
SN107 TST TRUNK SN712 SN720	2	(04)-140-104		G35 OR G36	JR35 OR JR36	SG0 & SG1 MTB'S ARE INCLUDED IN J3
SN107 TST TRUNK SN712 SN720	2	(04)-148-104		G35 OR G36	JR35 OR JR36	SG0 & SG1 MTB'S ARE INCLUDED IN J3
SN107 TST TRUNK SN712 SN720	2	(04)-156-104		G35 OR G36	JR35 OR JR36	SG0 & SG1 MTB'S ARE INCLUDED IN J3
SN107 TST TRUNK SN712 SN720	2	(04)-164-104		G35 OR G36	JR35 OR JR36	SG0 & SG1 MTB'S ARE INCLUDED IN J3
SN107 TST TRUNK SN712 SN720	2	(04)-172-104		G35 OR G36	JR35 OR JR36	SG0 & SG1 MTB'S ARE INCLUDED IN J3
SN107 TST TRUNK SN712 SN720	2	(04)-180-104		G35 OR G36	JR35 OR JR36	SG0 & SG1 MTB'S ARE INCLUDED IN J3
J1P023AM PMU 1 TO 3	2	( )-178-146		G37 OR G38	JR37 OR JR38	SG0 & SG1 MTB'S ARE INCLUDED IN J3
J1P023AM PMU 1 TO 3	2	( )-178-146		G37A OR G38A	JR37A OR JR38A	SG0 & SG1 MTB'S ARE INCLUDED IN J5
TST ACCESS UNIT	1			G39 OR G40	JR39 OR JR40	SG0 & SG1 HARDWIRED TO DF

(04) INDICATES UNIT EQL

TABLE CE

SC OR SD CIRCUIT PACK POSITIONS	DROP LENGTH	POS	CABLE ASSY ED-5D503-30	CABLE DESIGN
SG 0 (*)-026	SEE	L	G53,53A,53B	JR53,JR53A,JR53B
-034	TBL	|	G53,53A,53B	JR53,JR53A,JR53B
-042	DA &	|	G53,53A,53B	JR53,JR53A,JR53B
-050	DB	|	G53,53A,53B	JR53,JR53A,JR53B
-058	|	|	G53,53A,53B	JR53,JR53A,JR53B
-066	|	|	G53,53A,53B	JR53,JR53A,JR53B
-074	|	|	G53,53A,53B	JR53,JR53A,JR53B
-082	|	|	G53,53A,53B	JR53,JR53A,JR53B
SG 1 (*)-114	|	R	G54,54A,54B	JR54,JR54A,JR54B
-122	|	|	G54,54A,54B	JR54,JR54A,JR54B
-130	|	|	G54,54A,54B	JR54,JR54A,JR54B
-138	|	|	G54,54A,54B	JR54,JR54A,JR54B
-146	|	|	G54,54A,54B	JR54,JR54A,JR54B
-154	|	|	G54,54A,54B	JR54,JR54A,JR54B
-162	|	|	G54,54A,54B	JR54,JR54A,JR54B
-170	|	|	G54,54A,54B	JR54,JR54A,JR54B
SC OR SD CIRCUIT PACK POSTION IN CSU	|	|	|	|
(*)-024	|	L	G53,53A,53B	JR53,JR53A,JR53B
-032	|	|	G53,53A,53B	JR53,JR53A,JR53B
-040	|	|	G53,53A,53B	JR53,JR53A,JR53B
-048	|	|	G53,53A,53B	JR53,JR53A,JR53B
-056	|	|	G53,53A,53B	JR53,JR53A,JR53B
-064	|	|	G53,53A,53B	JR53,JR53A,JR53B
-072	|	|	G53,53A,53B	JR53,JR53A,JR53B
-080	|	|	G53,53A,53B	JR53,JR53A,JR53B

* INDICATES LTP NUMBER AND MTG POS EQL

TABLE CE1

MLT2 CIRCUIT POSITION (TN1040)	DROP LENGTH	POS	CA ASSY ED-5D503-30	CA DESIG
SG 0 (*)-026	SEE	L	G44	JR44
-034	TBL	|	G44	JR44
-042	DA &	|	G44	JR44
-050	DB	|	G44	JR44
-058	|	|	G44	JR44
-066	|	|	G44	JR44
-074	|	|	G44	JR44
-082	|	|	G44	JR44
SG 1 (*)-114	|	R	G44	JR44
-122	|	|	G44	JR44
-130	|	|	G44	JR44
-138	|	|	G44	JR44
-146	|	|	G44	JR44
-154	|	|	G44	JR44
-162	|	|	G44	JR44
-170	|	|	G44	JR44

* INDICATES LTP 0,2,3,4 OR SMC 1 AND MOUNTING POS EQL.

COPYRIGHT @ 2001 LUCENT TECHNOLOGIES
ALL RIGHTS RESERVED

PRINTED IN U.S.A.

TABLE CF

MMSU BASIC,GROWTH 1,2 OR 3

PORT	MA MTB EQL J1	CABLE ASSY ED-5D503-30 GROUP	CABLE DESIG	DROP LENGTH	POS	REMARKS	ORDERING DWG ED-5D500-21 GROUP
(MTB) SEE NOTE AT BOTTOM OF TABLE							
0	( )-(XXX)-100	41	JR41	SEE	L	SEE	109
1	103	41	JR41	TBL	L	NOTES	
2	106	41	JR41	DA &	L	75,76	
3	109	41	JR41	DB	L	& 77	
4	113	41	JR41		L		
5	116	41	JR41		L		
6	119	41	JR41		L		
7	122	41	JR41		L		
8	132	41	JR41		L		
9	135	41	JR41		L		
10	138	41	JR41		L		
11	141	41	JR41		L		
12	145	41	JR41		L		
13	148	41	JR41		L		
14	151	41	JR41		L		

METALLIC ACCESS CIRCUIT PACKS (MA) PROVIDE
METALLIC TEST BUS (MTB) PORTS AS FOLLOWS:

MA EQL	MTB EQL
026	030
034	038
042	046
114	118
122	126
130	134

XXX INDICATES MTB EQL

TABLE CF1

MMSU BASIC,GROWTH 1,2 OR 3

PORT	MA MTB EQL J1	CABLE ASSY ED-5D503-30 GROUP	CABLE DESIG	DROP LENGTH	POS	REMARKS	ORDERING DWG ED-5D500-21 GROUP
(MTB) SEE NOTE AT BOTTOM OF TABLE							
0,1	( )-(XXX)-100	41A	JR41A	SEE	L	SEE	109A
1,2	103	41A	JR41A	TBL		NOTES	
2,3	106	41A	JR41A	DA &		75,76 &	
4,5	113	41A	JR41A			80	
5,6	116	41A	JR41A				
6,7	119	41A	JR41A				
8,9	132	41A	JR41A		R		
9,10	135	41A	JR41A				
10,11	138	41A	JR41A				
12,13	145	41A	JR41A				
13,14	148	41A	JR41A				

METALLIC ACESS CIRCUIT PACKS (MA) PROVIDE
METALLIC TEST BUS (MTB) PORTS AS FOLLOWS:

MA EQL	MTB EQL	SG
026	030	0
034	038	0
042	046	0
114	118	1
122	126	1
130	134	1

XXX INDICATES MTB EQL

TABLE CJ

ED5D500-21 GROUP	1ST CABLE FROM TRCU TO GROUND COAX BAR ASSY: CA NO	CA DESIG	BUS		TRCU EQL	JK TERM	2ND CABLE FROM GROUND COAX BAR ASSY TO DSX3: CA NO	CA DESIG	BUS		JK TERM	REMARKS
G85,85A 1ST CKT J5D003ED-1 L1	1	JV221	0A	IN	(*)-074	DS3INA	2	JV221A	0A	IN	DS3INA	MAX TOTAL LENGTH OF 1ST AND 2ND CABLE IS 450 FEET.
	--	JV221B	--			--------	--	JV221C	--		--------	
	3		0B			DS3INB	4		0B		DS3INB	
	--		--		--------	--------	--		--		--------	
	5		1A		(*)-122	DS3INA	6		1A		DS3INA	
	--		--			--------	--		--		--------	
	7		1B			DS3INB	8		1B		DS3INB	
	--	--------	--	---	--------	--------	--	--------	--	---	--------	
	9	JV222	0A	OUT	(*)-074	DS3OUTA	10	JV222A	0A	OUT	DS3OUTA	
	--	JV222B	--			--------	--	JV222C	--		--------	
	11		0B			DS3OUTB	12		0B		DS3OUTB	
	--		--		--------	--------	--		--		--------	
	13		1A		(*)-122	DS3OUTA	14		1A		DS3OUTA	
	--		--			--------	--		--		--------	
	15		1B			DS3OUTB	16		1B		DS3OUTB	
G85,85A 2ND CKT J5D003ED-1 L2	1	JV221	0A	IN	(*)-034	DS3INA	2	JV221A	0A	IN	DS3INA	MAX TOTAL LENGTH OF 1ST AND 2ND CABLE IS 450 FEET.
	--	JV221B	--			--------	--	JV221C	--		--------	
	3		0B			DS3INB	4		0B		DS3INB	
	--		--		--------	--------	--		--		--------	
	5		1A		(*)-162	DS3INA	6		1A		DS3INA	
	--		--			--------	--		--		--------	
	7		1B			DS3INB	8		1B		DS3INB	
	--	--------	--	---	--------	--------	--	--------	--	---	--------	
	9	JV222	0A	OUT	(*)-034	DS3OUTA	10	JV222A	0A	OUT	DS3OUTA	
	--	JV222B	--			--------	--	JV222C	--		--------	
	11		0B			DS3OUTB	12		0B		DS3OUTB	
	--		--		--------	--------	--		--		--------	
	13		1A		(*)-162	DS3OUTA	14		1A		DS3OUTA	
	--		--			--------	--		--		--------	
	15		1B			DS3OUTB	16		1B		DS3OUTB	

(*) IN REMOTE MOD TRCU IS EQUIPPED IN SMC EQPT POS 4 (VERT EQL 45) (MCTU) OR POS 3 (VERT EQL 036) (MCTU2)

COPYRIGHT @ 2001 LUCENT TECHNOLOGIES
ALL RIGHTS RESERVED

TABLE CJ 1

CABLE MEASUREMENT FOR TRCU (J5D003ED-1) COAX CABLES (ED5D500-21, G85)

LENGTH OF CABLE, INCLUDING CONNECTION INCREMENT FROM CABLE RACK OR PALLET TO FARTHEST COMPONENT TO WHICH THE CABLE CONNECTS

							DROP DIM FROM CABLE RACK						
							MOUNTING POS						
GRP	CA DESIG	BUS		TRCU EQL	JK TERM	POS	0	1	2	3	4	5	6
G85	JV221	0A	IN	( )-074	DS3INA	L	6-8	5-11	5-2	4-6	3-9	3-1	2-4
G85	JV221	--											
A	B	0B			DS3INB		6-10	6-1	5-4	4-8	3-11	3-3	2-6
1ST		--											
CKT		1A		( )-122	DS3INA	R	6-6	5-9	5-0	4-4	3-7	2-11	2-2
		--											
		1B			DS3INB		6-8	5-11	5-2	4-6	3-9	3-1	2-4
	JV222	0A	OUT	( )-074	DS3OUTA	L	7-1	6-4	5-7	4-11	4-2	3-6	2-9
	JV222	--											
	B	0B			DS3OUTB		7-3	6-6	5-9	5-1	4-4	3-8	2-11
		--											
		1A		( )-122	DS3OUTA	R	6-10	6-1	5-4	4-8	3-11	3-3	2-6
		--											
		1B			DS3OUTB		7-0	6-3	5-6	4-10	4-1	3-5	2-8
G85	JV221	0A	IN	( )-034	DS3INA	L	6-3	5-6	4-9	4-1	3-4	2-8	1-11
G85	JV221	--											
A	B	0B			DS3INB		6-5	5-8	4-11	4-3	3-6	2-10	2-1
2ND		--											
CKT		1A		( )-162	DS3INA	R	6-1	5-4	4-7	3-11	3-2	2-6	1-9
		--											
		1B			DS3INB		6-3	5-6	4-9	4-1	3-4	2-8	1-11
	JV222	0A	OUT	( )-034	DS3OUTA	L	6-7	5-10	5-1	4-5	3-8	3-0	2-3
	JV222	--											
	B	0B			DS3OUTB		6-9	6-0	5-3	4-7	3-10	3-2	2 5
		--											
		1A		( )-162	DS3OUTA	R	6-5	5-8	4-11	4-3	3-6	2-10	2-1
		--											
		1B			DS3OUTB		6-7	5-10	5-1	4-5	3-8	3-0	2 3

TABLE CJ 2

CABLE MEASUREMENT FOR TRCU (J5D003ED-1) COAX CABLES (ED5D500-21, G85)

LENGTH OF CABLE, INCLUDING CONNECTION INCREMENT FROM CABLE RACK OR PALLET TO FARTHEST COMPONENT TO WHICH THE CABLE CONNECTS

							DROP DIM FROM PALLET						
							MOUNTING POS						
GRP	CA DESIG	BUS		TRCU EQL	JK TERM	POS	0	1	2	3	4	5	6
G85	JV221	0A	IN	( )-074	DS3INA	L	3-1	3-10	4-7	5-3	5-11	6-9	7-5
G85	JV221	--											
A	B	0B			DS3INB		2-11	3-8	4-5	5-1	5-9	6-7	7-3
1ST		--											
CKT		1A		( )-122	DS3INA	R	2-11	3-8	4-5	5-1	5-10	6-7	7-3
		--											
		1B			DS3INB		2-9	3-6	4-3	4-11	5-8	6-5	7-1
	JV222	0A	OUT	( )-074	DS3OUTA	L	3-5	4-2	4-11	5-7	6-3	7-1	7-9
	JV222	--											
	B	0B			DS3OUTB		3-3	4-0	4-9	5-5	6-1	6-11	7-7
		--											
		1A		( )-122	DS3OUTA	R	3-3	4-0	4-9	5-5	6-2	6-11	7-7
		--											
		1B			DS3OUTB		3-1	3-10	4-7	5-3	6-0	6-9	7-5
G85	JV221	0A	IN	( )-034	DS3INA	L	2-8	3-5	4-2	4-10	5-7	6-4	7-0
G85	JV221	--											
A	B	0B			DS3INB		2-6	3-3	4-0	4-8	5-5	6-2	6-10
2ND		--											
CKT		1A		( )-162	DS3INA	R	2-6	3-3	4-0	4-8	5-5	6-2	6-10
		--											
		1B			DS3INB		2-4	3-1	3-10	4-6	5-3	6-0	6-8
	JV222	0A	OUT	( )-034	DS3OUTA	L	3-0	3-9	4-6	5-2	5-11	6-8	7-4
	JV222	--											
	B	0B			DS3OUTB		2-10	3-7	4-4	5-0	5-9	6-6	7 2
		--											
		1A		( )-162	DS3OUTA	R	2 10	3-7	4-4	5-0	5-9	6-6	7-2
		--											
		1B			DS3OUTB		2-8	3-5	4-2	4-10	5-7	6-4	7-0

TABLE CK

	1ST CABLE FROM TRCU2 TO GROUND COAX BAR					2ND CABLE FROM GROUND COAX BAR TO DSX3				
ED5D500-21 GROUP	CA NO	CA DESIG	BUS	TRCU EQL	JK TERM	CA NO	CA DESIG	BUS	JK TERM	REMARKS
G86 (DA)	1	JV223	0AE OUT	(*)-063	DS3 OUT A	1	JV223A	0AE OUT	DS3 OUT A	MAX TOTAL LENGTH OF
G86A	--	(DA)	-- --		--------	--	(DA)	-- --	--------	1ST AND 2ND CABLE IS
1ST CKT	2	JV225	0AE IN		DS3 IN A	2	JV225A	0AE IN	DS3 IN A	450 FEET.
J5D003ED-2	--		-- --		--------	--		-- --	--------	
L3	3		0AO OUT	(*)-063	DS3 OUT B	3		0AO OUT	DS3 OUT B	
HOST	--		-- --		--------	--		-- --	--------	
OR	4		0AO IN		DS3 IN B	4		0AO IN	DS3 IN B	
REMOTE	--		-- --		--------	--		-- --	--------	
	5		1AE OUT	(*)-101	DS3 OUT A	5		1AE OUT	DS3 OUT A	
	--		-- --		--------	--		-- --	--------	
	6		1AE IN		DS3 IN A	6		1AE IN	DS3 IN A	
	--		-- --		--------	--		-- --	--------	
	7		1AO OUT	(*)-101	DS3 OUT B	7		1AO OUT	DS3 OUT B	
	--		-- --		--------	--		-- --	--------	
	8		1AO IN		DS3 IN B	8		1AO IN	DS3 IN B	
G86 (DA)	1	JV223	0BE OUT	(*)-082	DS3 OUT A	1	JV223A	0BE OUT	DS3 OUT A	MAX TOTAL LENGTH OF
G86A	--	(DA)	-- --		--------	--	(DA)	-- --	--------	1ST AND 2ND CABLE IS
2ND CKT	2	JV225	0BE IN		DS3 IN A	2	JV225A	0BE IN	DS3 IN A	450 FEET.
J5D003ED-2	--		-- --		--------	--		-- --	--------	
L4	3		0BO OUT	(*)-082	DS3 OUT B	3		0BO OUT	DS3 OUT B	
HOST ONLY	--		-- --		--------	--		-- --	--------	
	4		0BO IN		DS3 IN B	4		0BO IN	DS3 IN B	
	--		-- --		--------	--		-- --	--------	
	5		1BE OUT	(*)-120	DS3 OUT A	5		1BE OUT	DS3 OUT A	
	--		-- --		--------	--		-- --	--------	
	6		1BE IN		DS3 IN A	6		1BE IN	DS3 IN A	
	--		-- --		--------	--		-- --	--------	
	7		1BO OUT	(*)-120	DS3 OUT B	7		1BO OUT	DS3 OUT B	
	--		-- --		--------	--		-- --	--------	
	8		1BO IN		DS3 IN B	8		1BO IN	DS3 IN B	

COPYRIGHT @ 2001 LUCENT TECHNOLOGIES
ALL RIGHTS RESERVED

BT13

INTERCABINET CABLING
FOR
5ESS * SWITCH
*LUCENT TRADEMARK

DWG SIZE C2 | ISSUE 117

LUCENT TECHNOLOGIES INC | ED5D500-21 | SHEET OF D58 292

PRINTED IN U.S.A.

TABLE CK-1

CABLE MEASUREMENT FOR TRCU2 (5D003ED-2) COAX CABLES (ED5D500-21, G86(DA), G86A

LENGTH OF CABLE, INCLUDING CONNECTION INCREMENT FROM CABLE RACK OR PALLET TO FARTHEST COMPONENT TO WHICH THE CABLE CONNECTS

GRP	CA DESIG	CABLE	TRCU2 EQL	JK TERM	POS	DROP DIM FROM CABLE RACK MOUNTING POS 0	1	2	3	4	5	6
G86 DA 2ND CKT G86 A	JV223 (DA) JV225 A	1	( )-063	DS3 OUT A	L	7-5	6-8	5-11	5-3	4-6	3-10	3-1
		2		DS3 IN A		7-4	6-7	5-10	5-2	4-5	3-9	3-0
1ST CKT		3	( )-063	DS3 OUT B	L	7-5	6-8	5-11	5-3	4-6	3-10	3-1
		4		DS3 IN B		7-4	6-7	5-10	5-2	4-5	3-9	3-0
		5	( )-101	DS3 OUT A	R	7-7	6-10	6-1	5-5	4-8	4-0	3-3
		6		DS3 IN A		7-6	6-9	6-0	5-4	4-7	3-11	3-2
		7	( )-101	DS3 OUT B	R	7-7	6-10	6-1	5-5	4-8	4-0	3-3
		8		DS3 IN B		7-6	6-9	6-0	5-4	4-7	3-11	3-2
G86 DA 2ND CKT G86 A	JV223 (DA) JV225 A	1	( )-082	DS3 OUT A	L	7-7	6-10	6-1	5-5	4-8	4-0	3-3
		2		DS3 IN A		7-6	6-9	6-0	5-4	4-7	3-11	3-2
		3	( )-082	DS3 OUT B	L	7-7	6-10	6-1	5-5	4-8	4-0	3-3
		4		DS3 IN B		7-6	6-9	6-0	5-4	4-7	3-11	3-2
		5	( )-120	DS3 OUT A	R	7-5	6-8	5-11	5-3	4-8	3-10	3-1
		6		DS3 IN A		7-4	6-7	5-10	5-2	4-7	3-9	3-0
		7	( )-120	DS3 OUT B	R	7-5	6-8	5-11	5-3	4-8	3-10	3-1
		8		DS3 IN B		7-4	6-7	5-10	5-2	4-7	3-9	3-0

TABLE CK-2

CABLE MEASUREMENT FOR TRCU2 (5D003ED-2) COAX CABLES (ED5D500-21, G86(DA), G86A

LENGTH OF CABLE, INCLUDING CONNECTION INCREMENT FROM CABLE RACK OR PALLET TO FARTHEST COMPONENT TO WHICH THE CABLE CONNECTS

GRP	CA DESIG	CABLE	TRCU2 EQL	JK TERM	POS	DROP DIM FROM PALLET MOUNTING POS 0	1	2	3	4	5	6
G86 DA 2ND CKT G86 A	JV223 (DA) JV225 A	1	( )-063	DS3 OUT A	L	3-3	4-0	4-9	5-5	6-2	6-10	7-7
		2		DS3 IN A		3-2	3-11	4-8	5-4	6-1	6-9	7-6
1ST CKT		3	( )-063	DS3 OUT B	L	3-3	4-0	4-9	5-5	6-2	6-10	7-7
		4		DS3 IN B		3-2	3-11	4-8	5-4	6-1	6-9	7-6
		5	( )-101	DS3 OUT A	R	3-5	4-2	4-11	5-7	6-4	7-0	7-9
		6		DS3 IN A		3-4	4-1	4-10	5-6	6-3	6-11	7-8
		7	( )-101	DS3 OUT B	R	3-5	4-2	4-11	5-7	6-4	7-0	7-9
		8		DS3 IN B		3-4	4-1	4-10	5-6	6-3	6-11	7-8
G86 DA 2ND CKT G86 A	JV223 (DA) JV225 A	1	( )-082	DS3 OUT A	L	3-5	4-2	4-11	5-7	6-4	7-0	7-9
		2		DS3 IN A		3-4	4-1	4-10	5-6	6-3	6-11	7-8
		3	( )-082	DS3 OUT B	L	3-5	4-2	4-11	5-7	6-4	7-0	7-9
		4		DS3 IN B		3-4	4-1	4-10	5-6	6-3	6-11	7-8
		5	( )-120	DS3 OUT A	R	3-3	4-0	4-9	5-5	6-2	6-10	7-7
		6		DS3 IN A		3-2	3-11	4-8	5-4	6-1	6-9	7-6
		7	( )-120	DS3 OUT B	R	3-3	4-0	4-9	5-5	6-2	6-10	7-7
		8		DS3 IN B		3-2	3-11	4-8	5-4	6-1	6-9	7-6

TABLE CL

TRCU2 (J5D003ED-2,L3,4) CABLE ASGNT FOR 90MB OPTICAL OPTION [362]

ED5D500-21 GROUP	0A XMT	0A REC	1A XMT	1A REC	0B XMT	0B REC	1B XMT	1B REC
	8 MIC	50 MIC	8 MIC	50 MIC	8 MIC	50 MIC	8 MIC	50 MIC
	JL131	JL133	JL132	JL134	JL131	JL133	JL132	JL134
G87 OR 88 & 89 90,91,92,93,94, 95 J5D003ED-2 L3 (HOST OR REMOTE)	( )-069-XMT NOTE 97	( )-069-REC	( )-107-XMT NOTE 97	( )-107-REC				
G87 OR 88 & 89 90,91,92,93,94 95 J5D003ED-2 L4 (HOST ONLY)					( )-088-XMT NOTE 97	( )-088-REC	( )-126-XMT NOTE 97	( )-126-REC

TABLE CL1

CABLE MEASUREMENTS [364]

LENGTH OF CABLE, INCLUDING CONNECTING INCREMENTS, FROM CABLE RACK OR PALLET TO FARTHEST COMPONENT TO WHICH CABLE CONNECTS

ED-5D500-21 GROUP	CABLE DESIG	POS	CA RACK DROP LENGTH	PAL'ZD DROP LENGTH	CAB POS	EQL
			7-4		0	()11-069-X,R
G87,87A, 87B,88 & 89 90,91,92,93 94,95 1ST CKT J5D003ED-2 L3 (HOST OR REMOTE)	JL131 JL133	L	6-7		1	()19-069-X,R
			5-10		2	()28-069-X,R
			5-2		3	()36-069-X,R
			4-5		4	()45-069-X,R
			3-9		5	()53-069-X,R
			3-0		6	()62-069-X,R
			7-4		0	()11-107-X,R
	JL132 JL134	R	6-7		1	()19-107-X,R
			5-10		2	()28-107-X,R
			5-2		3	()36-107-X,R
			4-5		4	()45-107-X,R
			3-9		5	()53-107-X,R
			3-0		6	()62-107-X,R
			7-4		0	()11-088-X,R
G87,87A, 87B,88 & 89 2ND CKT J5D003ED-2 L4 (HOST ONLY)	JL131 JL133	L	6-7		1	()19-088-X,R
			5-10		2	()28-088-X,R
			5-2		3	()36-088-X,R
			4-5		4	()45-088-X,R
			3-9		5	()53-088-X,R
			3-0		6	()62-088-X,R
			7-2		0	()11-126-X,R
	JL132 JL134	R	6-5		1	()19-126-X,R
			5-8		2	()28-126-X,R
			5-0		3	()36-126-X,R
			4-3		4	()45-126-X,R
			3-7		5	()53-126-X,R
			2-10		6	()62-126-X,R

COPYRIGHT @ 2001 LUCENT TECHNOLOGIES
ALL RIGHTS RESERVED

BT13

INTERCABINET CABLING
FOR
5ESS * SWITCH
*LUCENT TRADEMARK

DWG SIZE C2 | ISSUE 117

PRINTED IN U.S.A.

TABLE CN1

CABLE MEASUREMENTS [365]						
LENGTH OF CABLE, INCLUDING CONNECTING INCREMENTS, FROM CABLE RACK OR PALLET TO FARTHEST COMPONENT TO WHICH CABLE CONNECTS						
ED-5D500-21 GROUP	CABLE DESIG	POS	CA RACK DROP LENGTH	PAL'ZD DROP LENGTH	CAB POS	EQL
G76,77	JV250	R	7-6		0	()06-
ED5D875-30	JV251					
OKEFORD 4U			6-10		1	()14-
SIGNALING						
PROTOCOL			6-3		2	()21-
CONVERTER						
UNIT			5-8		3	()28-
			5-0		4	()36-
			4-5		5	()43-
			3-9		6	()51-
			3-2		7	()58-

TABLE CN2

CABLE MEASUREMENTS [370]						
LENGTH OF CABLE, INCLUDING CONNECTING INCREMENTS, FROM CABLE RACK OR PALLET TO FARTHEST COMPONENT TO WHICH CABLE CONNECTS						
ED5D500-21 GROUP	CABLE DESIG	POS	CA RACK DROP LENGTH	PAL'ZD DROP LENGTH	CAB POS	EQL
G78	JV78 JV78A	R				
ED5D875-30			7-8			()24-
CRONUS SIGNALPATH 230 SIGNALING PROTOCOL CONVERTER UNIT			6-0			()44-

TABLE CX

CABLE MEASUREMENTS DIGITAL LINE TRUNK UNIT EXPORT (J5D003BA-1)															
DFI	CABLE DESIG	CA RACK DROP POS	CA RACK DROP LENGTH	PAL'ZD DROP LENGTH	FR POS	JK DESIG	WIRE SYMB	DFI	CABLE DESIG	CA RACK DROP POS	CA RACK DROP LENGTH	PAL'ZD DROP LENGTH	FR POS	JK DESIG	WIRE SYMB	DLTU-E EQL
			6-9	2-5	0						7-0	2-8	0			()11-025
1	JR339 JR339A	L	6-0	3-2	1	J3	CX1	1	JR341 JR341A	L	6-3	3-5	1	J4	CX2	()19-025
			5-3	3-11	2	(OUT)					5-6	4-2	2	(IN)		()28-025
			4-7	4-7	3						4-10	4-10	3			()36-025
			3-10	5-4	4						4-1	5-7	4			()45-025
			3-2	6-0	5						3-5	6-3	5			()53-025
			2-5	6-9	6						2-8	7-0	6			()62-025
			6-11	2-7	0						7-2	2-10	0			()11-035
2	JR339 JR339A	L	6-2	3-4	1	J5	CX3	2	JR341 JR341A	L	6-5	3-7	1	J6	CX4	()19-035
			5-5	4-1	2	(OUT)					5-8	4-4	2	(IN)		()28-035
			4-9	4-9	3						5-1	5-0	3			()36-035
			4-0	5-6	4						4-3	5-9	4			()45-035
			3-4	6-2	5						3-7	6-5	5			()53-035

*** CONTINUED ***

** CONTINUED **
TABLE CX

			2-7	6-11	6						2-10	7-2	6			()62-035
			7-0	2-8	0						7-3	2-11	0			()11-045
3	JR339 JR339A	L	6-3	3-5	1	J7	CX5	3	JR341 JR341A	L	6-6	3-8	1	J8	CX6	()19-045
			5-6	4-2	2	(OUT)					5-9	4-5	2	(IN)		()28-045
			4-10	4-10	3						5-1	5-1	3			()36-045
			4-1	5-7	4						4-4	5-10	4			()45-045
			3-5	6-3	5						3-9	6-6	5			()53-045
			2-8	7-0	6						2-11	7-3	6			()62-045
			7-1	2-9	0						7-4	3-9	0			()11-055
4	JR339 JR339A	L	6-4	3-6	1	J9	CX7	4	JR341 JR341A	L	6-7	3-9	1	J10	CX8	()19-055
			5-7	4-3	2	(OUT)					5-10	4-6	2	(IN)		()28-055
			4-11	4-11	3						5-2	5-2	3			()36-055
			4-2	5-8	4						4-5	5-11	4			()45-055
			3-6	6-4	5						3-9	6-7	5			()53-055
			2-9	7-1	6						3-1	7-4	6			()62-055
			7-3	2-10	0						7-6	3-1	0			()11-065
5	JR339 JR339A	L	6-6	3-7	1	J11	CX9	5	JR341 JR341A	L	6-9	3-10	1	J12	CX10	()19-065
			5-9	4-4	2	(OUT)					6-1	4-7	2	(IN)		()28-065
			5-1	5-0	3						5-4	5-3	3			()36-065
			4-4	5-9	4						4-7	6-0	4			()45-065
			3-8	6-5	5						3-11	6-8	5			()53-065
			2-11	7-2	6						3-2	7-5	6			()62-065
			7-4	3-0	0						7-7	3-3	0			()11-075
6	JR339 JR339A	L	6-7	3-9	1	J13	CX11	6	JR341 JR341A	L	6-10	4-0	1	J14	CX12	()19-075
			5-10	4-6	2	(OUT)					6-1	4-9	2	(IN)		()28-075
			5-2	5-2	3						5-3	5-5	3			()36-075
			4-5	5-11	4						4-8	6-2	4			()45-075
			3-9	6-7	5						4-0	6-10	5			()53-075
			3-0	7-4	6						3-3	7-7	6			()62-075
			7-5	3-1	0						7-8	3-4	0			()11-085
7	JR339 JR339A	L	6-8	3-10	1	J15	CX13	7	JR341 JR341A	L	6-11	4-1	1	J16	CX14	()19-085
			5-11	4-7	2	(OUT)					6-2	4-10	2	(IN)		()28-085
			5-3	5-3	3						5-6	5-6	3			()36-085
			4-6	6-0	4						4-9	6-3	4			()45-085
			3-10	6-8	5						4-1	6-11	5			()53-085
			3-1	7-5	6						3-4	7-8	6			()62-085
			7-6	3-2	0						7-9	3-5	0			()11-095
8	JR339 JR339A	L	6-9	3-11	1	J17	CX15	8	JR341 JR341A	L	7-0	4-2	1	J18	CX16	()19-095
			6-0	4-8	2	(OUT)					6-3	4-11	2	(IN)		()28-095
			5-4	5-4	3						5-7	5-7	3			()36-095
			4-7	6-1	4						4-10	6-4	4			()45-095
			3-11	6-9	5						4-2	7-0	5			()53-095
			3-2	7-6	6						3-5	7-9	6			()62-095
			7-5	3-0	0						7-8	3-3	0			()11-105
9	JR339 JR339A	R	6-8	3-9	1	J19	CX17	9	JR341 JR341A	R	6-11	4-0	1	J20	CX18	()19-105
			5-11	4-6	2	(OUT)					6-2	4-9	2	(IN)		()28-105
			5-3	5-2	3						5-6	5-5	3			()36-105
			4-6	5-11	4						4-9	6-2	4			()45-105
			3-10	6-7	5						4-1	6-10	5			()53-105
			3-1	7-4	6						3-4	7-7	6			()62-105
			7-3	2-11	0						7-6	3-2	0			()11-115
10	JR339 JR339A	R	6-6	3-8	1	J21	CX19	10	JR341 JR341A	R	6-9	3-11	1	J22	CX20	()19-115
			5-9	4-5	2	(OUT)					6-1	4-8	2	(IN)		()28-115
			5-1	5-1	3						5-4	5-4	3			()36-115
			4-4	5-10	4						4-7	6-1	4			()45-115
			3-8	6-6	5						3-11	6-9	5			()53-115
			2-11	7-3	6						3-2	7-6	6			()62-115
			7-2	2-10	0						7-5	3-1	0			()11-125
11	JR339 JR339A	R	6-5	3-7	1	J23	CX21	11	JR341 JR341A	R	6-8	3-10	1	J24	CX22	()19-125
			5-8	4-4	2	(OUT)					5-11	4-7	2	(IN)		()28-125
			5-0	5-0	3						5-3	5-3	3			()36-125
			4-3	5-9	4						4-6	6-0	4			()45-125
			3-7	6-5	5						3-10	6-8	5			()53-125
			2-10	7-2	6						3-1	7-5	6			()62-125
			7-1	2-9	0						7-4	3-0	0			()11-135
12	JR339 JR339A	R	6-4	3-6	1	J25	CX23	12	JR341 JR341A	R	6-7	3-9	1	J26	CX24	()19-135
			5-7	4-3	2	(OUT)					5-10	4-6	2	(IN)		()28-135
			4-11	4-11	3						5-2	5-2	3			()36-135
			4-2	5-8	4						4-5	5-11	4			()45-135

*** CONTINUED ***

COPYRIGHT @ 2001 LUCENT TECHNOLOGIES
ALL RIGHTS RESERVED

BT13

INTERCABINET CABLING
FOR
5ESS * SWITCH
*LUCENT TRADEMARK

DWG SIZE C2 | ISSUE 117

PRINTED IN U.S.A.

** CONTINUED **
TABLE CX

			3-6	6-4	5						3-9	6-7	5				()53-135
			2-9	7-1	6						3-0	7-4	6				()62-135
13	JR339	R	7-0	2-8	0						7-3	2-11	0				()11-145
	JR339A		6-3	3-5	1	J27	CX25	13	JR341	R	6-6	3-8	1	J28	CX26		()19-145
			5-6	4-2	2	(OUT)			JR341A		5-9	4-5	2	(IN)			()28-145
			4-10	4-10	3						5-1	5-1	3				()36-145
			4-1	5-7	4						4-4	5-10	4				()45-145
			3-5	6-3	5						3-8	6-6	5				()53-145
			2-8	7-0	6						2-11	7-3	6				()62-145
14	JR339	R	6-11	2-6	0	J28	CX27	14	JR341	R	7-2	2-9	0	J30	CX28		()11-155
	JR339A		6-2	3-3	1	(OUT)			JR341A		6-5	3-6	1	(IN)			()19-155
			5-5	4-0	2						5-8	4-3	2	)			()28-155
			4-9	4-8	3						5-0	4-11	3				()36-155
			4-0	5-5	4						4-3	5-8	4				()45-155
			3-4	6-1	5						3-7	6-4	5				()53-155
			2-7	6-10	6						2-10	7-1	6				()62-155
15	JR339	R	6-9	2-5	0						7-0	2-8	0				()11-165
	JR339A		6-0	3-2	1	J31	CX29	15	JR341	R	6-3	3-5	1	J32	CX30		()19-165
			5-3	3-11	2	(OUT)			JR341A		5-6	4-2	2	(IN)			()28-165
			4-7	4-7	3						4-10	4-10	3				()36-165
			3-10	5-4	4						4-1	5-7	4				()45-165
			3-2	6-0	5						3-5	6-3	5				()53-165
			2-5	6-9	6						2-8	7-0	6				()62-165
16	JR339	R	6-8	2-4	0						6-11	2-7	0				()11-175
	JR339A		5-11	3-1	1	J33	CX31	16	JR341	R	6-2	3-4	1	J34	CX32		()19-175
			5-2	3-10	2	(OUT)			JR341A		5-5	4-1	2	(IN)			()28-175
			4-6	4-6	3						4-9	4-9	3				()36-175
			3-9	5-3	4						4-0	5-6	4				()45-175
			3-1	5-11	5						3-4	6-2	5				()53-175
			2-4	6-8	6						2-7	6-11	6				()62-175

TABLE CX1

CABLE MEASUREMENTS
DIGITAL LINE TRUNK UNIT 3 (J5D003FN-1)

	CABLE	CA RACK DROP		PAL'ZD DROP	FR	JK	WIRE		CABLE	CA RACK DROP		PAL'ZD DROP	FR	JK	WIRE	DLTU-3
DFI	DESIG	POS	LENGTH	LENGTH	POS	DESIG	SYMB	DFI	DESIG	POS	LENGTH	LENGTH	POS	DESIG	SYMB	EQL
			6-9	2-5	0						7-0	2-8	0			()11-014
1	JR351	L	6-0	3-2	1	(OUT)		1	JR350	L	6-3	3-5	1	(IN)		()19-014
	JR353		5-3	3-11	2				JR352		5-6	4-2	2			()28-014
	JR351B		4-7	4-7	3				JR350B		4-10	4-10	3			()36-014
	JR351C		3-10	5-4	4				JR350C		4-1	5-7	4			()45-014
	JR351D		3-2	6-0	5				JR350D		3-5	6-3	5			()53-014
	JR351E		2-5	6-9	6				JR350E		2-8	7-0	6			()62-014
			6-11	2-7	0						7-2	2-10	0			()11-022
2	JR351	L	6-2	3-4	1	(OUT)		2	JR350	L	6-5	3-7	1	(IN)		()19-022
	JR353		5-5	4-1	2				JR352		5-8	4-4	2			()28-022
	JR351B		4-9	4-9	3				JR350B		5-1	5-0	3			()36-022
	JR351C		4-0	5-6	4				JR350C		4-3	5-9	4			()45-022
	JR351D		3-4	6-2	5				JR350D		3-7	6-5	5			()53-022
	JR351E		2-7	6-11	6				JR350E		2-10	7-2	6			()62-022
			7-0	2-8	0						7-3	2-11	0			()11-030
3	JR351	L	6-3	3-5	1	(OUT)		3	JR350	L	6-6	3-8	1	(IN)		()19-030
	JR353		5-6	4-2	2				JR352		5-9	4-5	2			()28-030
	JR351B		4-10	4-10	3				JR350B		5-1	5-1	3			()36-030
	JR351C		4-1	5-7	4				JR350C		4-4	5-10	4			()45-030
	JR351D		3-5	6-3	5				JR350D		3-9	6-6	5			()53-030
	JR351E		2-8	7-0	6				JR350E		2-11	7-3	6			()62-030
			7-1	2-9	0						7-4	3-0	0			()11-038
4	JR351	L	6-4	3-6	1	(OUT)		4	JR350	L	6-7	3-9	1	(IN)		()19-038
	JR353		5-7	4-3	2				JR352		5-10	4-6	2			()28-038
	JR351B		4-11	4-11	3				JR350B		5-2	5-2	3			()36-038
	JR351C		4-2	5-8	4				JR350C		4-5	5-11	4			()45-038
	JR351D		3-6	6-4	5				JR350D		3-9	6-7	5			()53-038
	JR351E		2-9	7-1	6				JR350E		3-1	7-4	6			()62-038
			7-3	2-10	0						7-6	3-1	0			()11-046

*** CONTINUED ***

** CONTINUED **
TABLE CX1

5	JR351	L	6-6	3-7	1	(OUT)		5	JR350	L	6-9	3-10	1	(IN)			()19-046
	JR353		5-9	4-4	2				JR352		6-1	4-7	2				()28-046
	JR351B		5-1	5-0	3				JR350B		5-4	5-3	3				()36-046
	JR351C		4-4	5-9	4				JR350C		4-7	6-0	4				()45-046
	JR351D		3-8	6-5	5				JR350D		3-11	6-8	5				()53-046
	JR351E		2-11	7-2	6				JR350E		3-2	7-5	6				()62-046
			7-4	3-0	0						7-7	3-3	0				()11-058
6	JR351	L	6-7	3-9	1	(OUT)		6	JR350	L	6-10	4-0	1	J14	CX12		()19-058
	JR353		5-10	4-6	2				JR352		6-1	4-9	2	(IN)			()28-058
	JR351B		5-2	5-2	3				JR350B		5-3	5-5	3				()36-058
	JR351C		4-5	5-11	4				JR350C		4-8	6-2	4				()45-058
	JR351D		3-9	6-7	5				JR350D		4-0	6-10	5				()53-058
	JR351E		3-0	7-4	6				JR350E		3-3	7-7	6				()62-058
			7-3	3-1	0						7-8	3-4	0				()11-066
7	JR351	L	6-8	3-10	1	(OUT)		7	JR350	L	6-11	4-1	1	(IN)			()19-066
	JR353		5-11	4-7	2				JR352		6-2	4-10	2				()28-066
	JR351B		5-3	5-3	3				JR350B		5-6	5-6	3				()36-066
	JR351C		4-6	6-0	4				JR350C		4-9	6-3	4				()45-066
	JR351D		3-10	6-8	5				JR350D		4-1	6-11	5				()53-066
	JR351E		3-1	7-5	6				JR350E		3-4	7-8	6				()62-066
			7-6	3-2	0						7-9	3-5	0				()11-074
8	JR351	L	6-9	3-11	1	(OUT)		8	JR350	L	7-0	4-2	1	(IN)			()19-074
	JR353		6-0	4-8	2				JR352		6-3	4-11	2				()28-074
	JR351B		5-4	5-4	3				JR350B		5-7	5-7	3				()36-074
	JR351C		4-7	6-1	4				JR350C		4-10	6-4	4				()45-074
	JR351D		3-11	6-9	5				JR350D		4-2	7-0	5				()53-074
	JR351E		3-2	7-6	6				JR350E		3-5	7-9	6				()62-074
			7-5	3-0	0						7-8	3-3	0				()11-082
9	JR351	L	6-8	3-9	1	(OUT)		9	JR350	L	6-11	4-0	1	(IN)			()19-082
	JR353		5-11	4-6	2				JR352		6-2	4-9	2				()28-082
	JR351B		5-3	5-2	3				JR350B		5-6	5-5	3				()36-082
	JR351C		4-6	5-11	4				JR350C		4-9	6-2	4				()45-082
	JR351D		3-10	6-7	5				JR350D		4-1	6-10	5				()53-082
1	JR351E		3-1	7-4	6				JR350E		3-4	7-7	6				()62-082
			7-3	2-11	0						7-6	3-2	0				()11-090
10	JR351	L	6-6	3-8	1	(OUT)		10	JR350	L	6-9	3-11	1	(IN)			()19-090
	JR353		5-9	4-5	2				JR352		6-1	4-8	2				()28-090
	JR351B		5-1	5-1	3				JR350B		5-4	5-4	3				()36-090
	JR351C		4-4	5-10	4				JR350C		4-7	6-1	4				()45-090
	JR351D		3-8	6-6	5				JR350D		3-11	6-9	5				()53-090
	JR351E		2-11	7-3	6				JR350E		3-2	7-6	6				()62-090
			7-2	2-10	0						7-5	3-1	0				()11-098
11	JR351	R	6-5	3-7	1	(OUT)		11	JR350	R	6-8	3-10	1	(IN)			()19-098
	JR353		5-8	4-4	2				JR352		5-11	4-7	2				()28-098
	JR351B		5-0	5-0	3				JR350B		5-3	5-3	3				()36-098
	JR351C		4-3	5-9	4				JR350C		4-6	6-0	4				()45-098
	JR351D		3-7	6-5	5				JR350D		3-10	6-8	5				()53-098
	JR351E		2-10	7-2	6				JR350E		3-1	7-5	6				()62-098
			7-1	2-9	0						7-4	3-0	0				()11-106
12	JR351	R	6-4	3-6	1	(OUT)		12	JR350	R	6-7	3-9	1	(IN)			()19-106
	JR353		5-7	4-3	2				JR352		5-10	4-6	2				()28-106
	JR351B		4-11	4-11	3				JR350B		5-2	5-2	3				()36-106
	JR351C		4-2	5-8	4				JR350C		4-5	5-11	4				()45-106
	JR351D		3-6	6-4	5				JR350D		3-9	6-7	5				()53-106
	JR351E		2-9	7-1	6				JR350E		3-0	7-4	6				()62-106
			7-0	2-8	0						7-3	2-11	0				()11-114
13	JR351	R	6-3	3-5	1	(OUT)		13	JR350	R	6-6	3-8	1	(IN)			()19-114
	JR353		5-6	4-2	2				JR352		5-9	4-5	2				()28-114
	JR351B		4-10	4-10	3				JR350B		5-1	5-1	3				()36-114
	JR351C		4-1	5-7	4				JR350C		4-4	5-10	4				()45-114
	JR351D		3-5	6-3	5				JR350D		3-8	6-6	5				()53-114
	JR351E		2-8	7-0	6				JR350E		2-11	7-3	6				()62-114
			7-2	2-9	0						7-3	2-11	0				()11-122
14	JR351	R	6-11	2-6	0	(OUT)		14	JR350	R	7-2	2-9	0	(IN)			()19-122
	JR353		6-2	3-3	1				JR352		6-5	3-6	1				()28-122
	JR351B		5-5	4-0	2				JR350B		5-8	4-3	2				()36-122
	JR351C		4-9	4-8	3				JR350C		5-0	4-11	3				()45-122
	JR351D		4-0	5-5	4				JR350D		4-3	5-8	4				()53-122
	JR351E		3-4	6-2	5				JR350E		4-4	6-7	5				()62-122

*** CONTINUED ***

COPYRIGHT @ 2001 LUCENT TECHNOLOGIES
ALL RIGHTS RESERVED

BT13

INTERCABINET CABLING
FOR
5ESS * SWITCH
*LUCENT TRADEMARK

DWG SIZE C2 | ISSUE 117

PRINTED IN U.S.A.

** CONTINUED **
TABLE CX1

			6-9	2-5	0					7-0	2-8	0			()11-130
15	JR351	R	6-0	3-2	1	(OUT)		15	JR350	R	6-3	3-5	1	(IN)		()19-130
	JR353		5-3	3-11	2				JR352		5-6	4-2	2			()28-130
	JR351B		4-7	4-7	3				JR350B		4-10	4-10	3			()36-130
	JR351C		3-10	5-4	4				JR350C		4-1	5-7	4			()45-130
	JR351D		3-2	6-0	5				JR350D		3-5	6-3	5			()53-130
	JR351E		2-5	6-9	6				JR350E		2-8	7-0	6			()62-130
			6-8	2-4	0					6-11	2-7	0			()11-142
16	JR351	R	5-11	3-1	1	(OUT)		16	JR350	R	6-2	3-4	1	(IN)		()19-142
	JR353		5-2	3-10	2				JR352		5-5	4-1	2			()28-142
	JR351B		4-6	4-6	3				JR351B		4-9	4-9	3			()36-142
	JR351C		3-9	5-3	4				JR351C		4-0	5-6	4			()45-142
	JR351D		3-1	5-11	5				JR351D		3-4	6-2	5			()53-142
	JR351E		2-4	6-8	6				JR350E		2-7	6-11	6			()62-142
17		R	6-11	2-6	0	(OUT)		17		R	7-2	2-9	0	(IN)		()11-150
	JR351		6-2	3-3	1				JR350		6-5	3-6	1			()19-150
	JR353		5-5	4-0	2				JR352		5-8	4-3	2			()28-150
	JR351B		4-9	4-8	3				JR350B		5-0	4-11	3			()36-150
	JR351C		4-0	5-5	4				JR350C		4-3	5-8	4			()45-150
	JR351D		3-4	6-1	5				JR350D		3-7	6-4	5			()53-150
	JR351E		2-7	6-10	6				JR350E		2-10	7-1	6			()62-150
			6-9	2-5	0					7-0	2-8	0			()11-158
18	JR351	R	6-0	3-2	1	(OUT)		18	JR350	R	6-3	3-5	1	(IN)		()19-158
	JR353		5-3	3-11	2				JR352		5-6	4-2	2			()28-158
	JR351B		4-7	4-7	3				JR350B		4-10	4-10	3			()36-158
	JR351C		3-10	5-4	4				JR350C		4-1	5-7	4			()45-158
	JR351D		3-2	6-0	5				JR350D		3-5	6-3	5			()53-158
	JR351E		2-5	6-9	6				JR350E		2-8	7-0	6			()62-158
			6-8	2-4	0					6-11	2-7	0			()11-166
19	JR351	R	5-11	3-1	1	(OUT)		19	JR350	R	6-2	3-4	1	(IN)		()19-166
	JR353		5-2	3-10	2				JR352		5-5	4-1	2			()28-166
	JR351B		4-6	4-6	3				JR350B		4-9	4-9	3			()36-166
	JR351C		3-9	5-3	4				JR350C		4-0	5-6	4			()45-166
	JR351D		3-1	5-11	5				JR350D		3-4	6-2	5			()53-166
	JR351E		2-4	6-8	6				JR350E		2-7	6-11	6			()62-166
			6-9	2-5	0					7-0	2-8	0			()11-174
20	JR351	R	6-0	3-2	1	(OUT)		20	JR350	R	6-3	3-5	1	(IN)		()19-174
	JR353		5-3	3-11	2				JR352		5-6	4-2	2			()28-174
	JR351B		4-7	4-7	3				JR350B		4-10	4-10	3			()36-174
	JR351C		3-10	5-4	4				JR350C		4-1	5-7	4			()45-174
	JR351D		3-2	6-0	5				JR350D		3-5	6-3	5			()53-174
	JR351E		2-5	6-9	6				JR350E		2-8	7-0	6			()62-174

TABLE CX1A

CABLE MEASUREMENTS
DIGITAL LINE TRUNK UNIT 3 (J5D003FN-1)

DFI	CABLE DESIG	CA RACK POS	DROP LENGTH	PAL'ZD DROP LENGTH	FR POS	JK DESIG	WIRE SYMB	DFI	CABLE DESIG	CA RACK POS	DROP LENGTH	PAL'ZD DROP LENGTH	FR POS	JK DESIG	WIRE SYMB	DLTU-3 EQL
1,2	JR148F		6-11	2-7	0	(OUT)		1,2	JR148F		7-2	2-10	0	(IN)		()11-022
	JR148G		6-2	3-4	1				JR148G		6-5	3-7	1			()19-022
		R	5-5	4-1	2					R	5-8	4-4	2			()28-022
			4-9	4-9	3						5-1	5-0	3			()36-022
			4-0	5-6	4						4-3	5-9	4			()45-022
			3-4	6-2	5						3-7	6-5	5			()53-022
			2-7	6-11	6						2-10	7-2	6			()62-022
3,4	JR148F		7-1	2-9	0	(OUT)		3,4	JR148F		7-4	3-0	0	(IN)		()11-038
	JR148G		6-4	3-6	1				JR148G		6-7	3-9	1			()19-038
		R	5-7	4-3	2					R	5-10	4-6	2			()28-038
			4-11	4-11	3						5-2	5-2	3			()36-038
			4-2	5-8	4						4-5	5-11	4			()45-038
			3-6	6-4	5						3-9	6-7	5			()53-038
			2-9	7-1	6						3-1	7-4	6			()62-038
5,6	JR148F		7-4	3-0	0	(OUT)		5,6	JR148F		7-7	3-3	0	(IN)		()11-058
	JR148G		6-7	3-9	1				JR148G		6-10	4-0	1			()19-058
		R	5-10	4-6	2					R	6-1	4-9	2			()28-058
			5-2	5-2	3						5-3	5-5	3			()36-058

*** CONTINUED ***

** CONTINUED **
TABLE CX1A

			4-5	5-11	4						4-8	6-2	4			()45-058
			3-9	6-7	5						4-0	6-10	5			()53-058
			3-0	7-4	6						3-3	7-7	6			()62-058
7,8	JR148F		7-6	3-2	0	(OUT)		7,8	JR148F		7-9	3-5	0	(IN)		()11-074
	JR148G		6-9	3-11	1				JR148G		7-0	4-2	1			()19-074
		R	6-0	4-8	2					R	6-3	4-11	2			()28-074
			5-4	5-4	3						5-7	5-7	3			()36-074
			4-7	6-1	4						4-10	6-4	4			()45-074
			3-11	6-9	5						4-2	7-0	5			()53-074
			3-2	7-6	6						3-5	7-9	6			()62-074
9, 10	JR148F		7-3	2-11	0	(OUT)		9, 10	JR148F		7-6	3-2	0	(IN)		()11-090
	JR148G		6-6	3-8	1				JR148G		6-9	3-11	1			()19-090
		R	5-9	4-5	2					R	6-1	4-8	2			()28-090
			5-1	5-1	3						5-4	5-4	3			()36-090
			4-4	5-10	4						4-7	6-1	4			()45-090
			3-8	6-6	5						3-11	6-9	5			()53-090
			2-11	7-3	6						3-2	7-6	6			()62-090
11, 12	JR148F		7-2	2-10	0	(OUT)		11, 12	JR148F		7-5	3-1	0	(IN)		()11-098
	JR148G		6-5	3-7	1				JR148G		6-8	3-10	1			()19-098
		L	5-8	4-4	2					L	5-11	4-7	2			()28-098
			5-0	5-0	3						5-3	5-3	3			()36-098
			4-3	5-9	4						4-6	6-0	4			()45-098
			3-7	6-5	5						3-10	6-8	5			()53-098
			2-10	7-2	6						3-1	7-5	6			()62-098
13, 14	JR148F		7-0	2-8	0	(OUT)		13, 14	JR148F		7-3	2-11	0	(IN)		()11-114
	JR148G		6-3	3-5	1				JR148G		6-6	3-8	1			()19-114
		L	5-6	4-2	2					L	5-9	4-5	2			()28-114
			4-10	4-10	3						5-1	5-1	3			()36-114
			4-1	5-7	4						4-4	5-10	4			()45-114
			3-5	6-3	5						3-8	6-6	5			()53-114
			2-8	7-0	6						2-11	7-3	6			()62-114
15, 16	JR148F		6-9	2-5	0	(OUT)		15, 16	JR148F		7-0	2-8	0	(IN)		()11-130
	JR148G		6-0	3-2	1				JR148G		6-3	3-5	1			()19-130
		L	5-3	3-11	2					L	5-6	4-2	2			()28-130
			4-7	4-7	3						4-10	4-10	3			()36-130
			3-10	5-4	4						4-1	5-7	4			()45-130
			3-2	6-0	5						3-5	6-3	5			()53-130
			2-5	6-9	6						2-8	7-0	6			()62-130
17, 18	JR148F		6-11	2-6	0	(OUT)		17, 18	JR148F		7-2	2-9	0	(IN)		()11-150
	JR148G		6-2	3-3	1				JR148G		6-5	3-6	1			()19-150
		L	5-5	4-0	2					L	5-8	4-3	2			()28-150
			4-9	4-8	3						5-0	4-11	3			()36-150
			4-0	5-5	4						4-3	5-8	4			()45-150
			3-4	6-1	5						3-7	6-4	5			()53-150
			2-7	6-10	6						2-10	7-1	6			()62-150
19, 20	JR148F		6-8	2-4	0	(OUT)		19, 20	JR148F		6-11	2-7	0	(IN)		()11-166
	JR148G		5-11	3-1	1				JR148G		6-2	3-4	1			()19-166
		L	5-2	3-10	2					L	5-5	4-1	2			()28-166
			4-6	4-6	3						4-9	4-9	3			()36-166
			3-9	5-3	4						4-0	5-6	4			()45-166
			3-1	5-11	5						3-4	6-2	5			()53-166
			2-4	6-8	6						2-7	6-11	6			()62-166

COPYRIGHT @ 2001 LUCENT TECHNOLOGIES
ALL RIGHTS RESERVED

BT13

INTERCABINET CABLING
FOR
5ESS * SWITCH
*LUCENT TRADEMARK

DWG SIZE C2 | ISSUE 117

LUCENT TECHNOLOGIES INC | ED5D500-21 | SHEET D62 OF 292

PRINTED IN U.S.A.

TABLE CX1B

CABLE MEASUREMENTS
COMBINE SERVICE UNIT (J5D003FS-1)

DFI	CABLE DESIG	CA RACK DROP POS	CA RACK DROP LENGTH	PAL'ZD DROP LENGTH	FR POS	JK DESIG	WIRE SYMB	DFI	CABLE DESIG	CA RACK DROP POS	CA RACK DROP LENGTH	PAL'ZD DROP LENGTH	FR POS	JK DESIG	WIRE SYMB	CSU EQL
			6-9	2-5	0						7-0	2-8	0			()11-138
1	JR351	L	6-0	3-2	1	(OUT)		1	JR350	L	6-3	3-5	1	(IN)		()19-138
	JR353		5-3	3-11	2				JR352		5-6	4-2	2			()28-138
			4-7	4-7	3						4-10	4-10	3			()36-138
			3-10	5-4	4						4-1	5-7	4			()45-138
			3-2	6-0	5						3-5	6-3	5			()53-138
			2-5	6-9	6						2-8	7-0	6			()62-138
			6-11	2-7	0						7-2	2-10	0			()11-146
2	JR351	L	6-2	3-4	1	(OUT)		2	JR350	L	6-5	3-7	1	(IN)		()19-146
	JR353		5-5	4-1	2				JR352		5-8	4-4	2			()28-146
			4-9	4-9	3						5-1	5-0	3			()36-146
			4-0	5-6	4						4-3	5-9	4			()45-146
			3-4	6-2	5						3-7	6-5	5			()53-146
			2-7	6-11	6						2-10	7-2	6			()62-146
			7-0	2-8	0						7-3	2-11	0			()11-162
3	JR351	L	6-3	3-5	1	(OUT)		3	JR350	L	6-6	3-8	1	(IN)		()19-162
	JR353		5-6	4-2	2				JR352		5-9	4-5	2			()28-162
			4-10	4-10	3						5-1	5-1	3			()36-162
			4-1	5-7	4						4-4	5-10	4			()45-162
			3-5	6-3	5						3-9	6-6	5			()53-162
			2-8	7-0	6						2-11	7-3	6			()62-162
			7-1	2-9	0						7-4	3-0	0			()11-170
4	JR351	L	6-4	3-6	1	(OUT)		4	JR350	L	6-7	3-9	1	(IN)		()19-170
	JR353		5-7	4-3	2				JR352		5-10	4-6	2			()28-170
			4-11	4-11	3						5-2	5-2	3			()36-170
			4-2	5-8	4						4-5	5-11	4			()45-170
			3-6	6-4	5						3-9	6-7	5			()53-170
			2-9	7-1	6						3-1	7-4	6			()62-170
			7-3	2-10	0						7-6	3-1	0			()11-178
5	JR351	L	6-6	3-7	1	(OUT)		5	JR350	L	6-9	3-10	1	(IN)		()19-178
	JR353		5-9	4-4	2				JR352		6-1	4-7	2			()28-178
			5-1	5-0	3						5-4	5-3	3			()36-178
			4-4	5-9	4						4-7	6-0	4			()45-178
			3-8	6-5	5						3-11	6-8	5			()53-178
			2-11	7-2	6						3-2	7-5	6			()62-178

TABLE CX1C

CABLE MEASUREMENTS
DIGITAL LINE TRUNK UNIT 3 (J5D003FN-1)

DFI	CABLE DESIG	CA RACK DROP POS	CA RACK DROP LENGTH	PAL'ZD DROP LENGTH	FR POS	JK DESIG	WIRE SYMB	DFI	CABLE DESIG	CA RACK DROP POS	CA RACK DROP LENGTH	PAL'ZD DROP LENGTH	FR POS	JK DESIG	WIRE SYMB	DLTU-3 EQL
1,2	JR148H		6-11	2-7	0	(OUT)		1,2	JR148H		7-2	2-10	0	(IN)		()11-038
3,4	JR148J		6-2	3-4	1				JR148J		6-5	3-7	1			()19-038
		R	5-5	4-1	2					R	5-8	4-4	2			()28-038
			4-9	4-9	3						5-1	5-0	3			()36-038
			4-0	5-6	4						4-3	5-9	4			()45-038
			3-4	6-2	5						3-7	6-5	5			()53-038
			2-7	6-11	6						2-10	7-2	6			()62-038
5,6	JR148H		7-6	3-2	0	(OUT)		5,6	JR148H		7-9	3-5	0	(IN)		()11-074
7,8	JR148J		6-9	3-11	1			7,8	JR148J		7-0	4-2	1			()19-074
		R	6-0	4-8	2					R	6-3	4-11	2			()28-074
			5-4	5-4	3						5-7	5-7	3			()36-074
			4-7	6-1	4						4-10	6-4	4			()45-074
			3-11	6-9	5						4-2	7-0	5			()53-074
			3-2	7-6	6						3-5	7-9	6			()62-074
9,	JR148H		7-2	2-10	0	(OUT)		9,	JR148H		7-5	3-1	0	(IN)		()11-098
10,	JR148J		6-5	3-7	1			10,	JR148J		6-8	3-10	1			()19-098
11,		L	5-8	4-4	2			11,		L	5-11	4-7	2			()28-098
12			5-0	5-0	3			12			5-3	5-3	3			()36-098
			4-3	5-9	4						4-6	6-0	4			()45-098
			3-7	6-5	5						3-10	6-8	5			()53-098
			2-10	7-2	6						3-1	7-5	6			()62-098
13,	JR148G		6-9	2-5	0	(OUT)		13,	JR148G		7-0	2-8	0	(IN)		()11-130
14,	JR148H		6-0	3-2	1			14,	JR148H		6-3	3-5	1			()19-130
15,		L	5-3	3-11	2			15,		L	5-6	4-2	2			()28-130
16			4-7	4-7	3			16			4-10	4-10	3			()36-130
			3-10	5-4	4						4-1	5-7	4			()45-130
			3-2	6-0	5						3-5	6-3	5			()53-130
			2-5	6-9	6						2-8	7-0	6			()62-130
17,	JR148G		6-8	2-4	0	(OUT)		17,	JR148G		6-11	2-7	0	(IN)		()11-166
18,	JR148H		5-11	3-1	1			18,	JR148H		6-2	3-4	1			()19-166
19,		L	5-2	3-10	2			19,		L	5-5	4-1	2			()28-166
20			4-6	4-6	3			20			4-9	4-9	3			()36-166
			3-9	5-3	4						4-0	5-6	4			()45-166
			3-1	5-11	5						3-4	6-2	5			()53-166
			2-4	6-8	6						2-7	6-11	6			()62-166

TABLE CX2

CABLE MEASUREMENTS
DIGITAL LINE TRUNK UNIT-EXPORT (J5D003BA-1)

DFI	CABLE DESIG	CA RACK DROP POS	CA RACK DROP LENGTH	PAL'ZD DROP LENGTH	FR POS	JK DESIG	WIRE SYMB	DFI	CABLE DESIG	CA RACK DROP POS	CA RACK DROP LENGTH	PAL'ZD DROP LENGTH	FR POS	JK DESIG	WIRE SYMB	DLTU-3 EQL
			6-11	2-7	0						7-2	2-10	0			()11-019
1	JR754A	L	6-2	3-4	1	(OUT)		1	JR754	L	6-5	3-7	1	(IN)		()19-019
	JR756A		5-5	4-1	2				JR756		5-8	4-4	2			()28-019
	JR766A		4-9	4-9	3				JR766		5-1	5-0	3			()36-019
	JR767B		4-0	5-6	4				JR767		4-3	5-9	4			()45-019
	JR768A		3-4	6-2	5				JR768		3-7	6-5	5			()53-019
	JR769B		2-7	6-11	6				JR769		2-10	7-2	6			()62-019
			7-0	2-8	0						7-3	2-11	0			()11-029
2	JR754A	L	6-3	3-5	1	(OUT)		2	JR754	L	6-6	3-8	1	(IN)		()19-029
	JR756A		5-6	4-2	2				JR756		5-9	4-5	2			()28-029
	JR766A		4-10	4-10	3				JR766		5-1	5-1	3			()36-029
	JR767B		4-1	5-7	4				JR767		4-4	5-10	4			()45-029
	JR768A		3-5	6-3	5				JR768		3-9	6-6	5			()53-029
	JR769B		2-8	7-0	6				JR769		2-11	7-3	6			()62-029
			7-1	2-9	0						7-4	3-0	0			()11-039
3	JR754A	L	6-4	3-6	1	(OUT)		3	JR754	L	6-7	3-9	1	(IN)		()19-039
	JR756A		5-7	4-3	2				JR756		5-10	4-6	2			()28-039
	JR766A		4-11	4-11	3				JR766		5-2	5-2	3			()36-039

*** CONTINUED ***

COPYRIGHT @ 2001 LUCENT TECHNOLOGIES
ALL RIGHTS RESERVED

** CONTINUED **
TABLE CX2

	JR767B	4-2	5-8	4				JR767		4-5	5-11	4				()45-039
	JR768A	3-6	6-4	5				JR768		3-9	6-7	5				()53-039
	JR769B	2-9	7-1	6				JR769		3-1	7-4	6				()62-039
		7-3	2-10	0						7-6	3-1	0				()11-049
4	JR754A	L 6-6	3-7	1	(OUT)		4	JR754	L	6-9	3-10	1	(IN)			()19-049
	JR756A	5-9	4-4	2				JR756		6-1	4-7	2				()28-049
	JR766A	5-1	5-0	3				JR766		5-4	5-3	3				()36-049
	JR767B	4-4	5-9	4				JR767		4-7	6-0	4				()45-049
	JR768A	3-8	6-5	5				JR768		3-11	6-8	5				()53-049
	JR769B	2-11	7-2	6				JR769		3-2	7-5	6				()62-049
		7-4	3-0	0						7-7	3-3	0				()11-059
5	JR754A	L 6-7	3-9	1	(OUT)		5	JR754	L	6-10	4-0	1	(IN)			()19-059
	JR756A	5-10	4-6	2				JR756		6-1	4-9	2				()28-059
	JR766A	5-2	5-2	3				JR766		5-3	5-5	3				()36-059
	JR767B	4-5	5-11	4				JR767		4-8	6-2	4				()45-059
	JR768A	3-9	6-7	5				JR768		4-0	6-10	5				()53-059
	JR769B	3-0	7-4	6				JR769		3-3	7-7	6				()62-059
		7-5	3-1	0						7-8	3-4	0				()11-069
6	JR754A	L 6-8	3-10	1	(OUT)		6	JR754	L	6-11	4-1	1	(IN)			()19-069
	JR756A	5-11	4-7	2				JR756		6-2	4-10	2				()28-069
	JR766A	5-3	5-3	3				JR766		5-6	5-6	3				()36-069
	JR767B	4-6	6-0	4				JR767		4-9	6-3	4				()45-069
	JR768A	3-10	6-8	5				JR768		4-1	6-11	5				()53-069
	JR769B	3-1	7-5	6				JR769		3-4	7-8	6				()62-069
		7-5	3-0	0						7-7	3-3	0				()11-079
7	JR754A	L 6-8	3-9	1	(OUT)		7	JR754	L	6-11	4-0	1	(IN)			()19-079
	JR756A	5-11	4-6	2				JR756		6-2	4-9	2				()28-079
	JR766A	5-3	5-2	3				JR766		5-6	5-5	3				()36-079
	JR767B	4-6	5-11	4				JR767		4-9	6-2	4				()45-079
	JR768A	3-10	6-7	5				JR768		4-1	6-10	5				()53-079
	JR769B	3-1	7-4	6				JR769		3-4	7-7	6				()62-079
		7-3	2-11	0						7-6	3-2	0				()11-089
8	JR754A	L 6-6	3-8	1	(OUT)		8	JR754	L	6-9	3-11	1	(IN)			()19-089
	JR756A	5-9	4-5	2				JR756		6-1	4-8	2				()28-089
	JR766A	5-1	5-1	3				JR766		5-4	5-4	3				()36-089
	JR767B	4-4	5-10	4				JR767		4-7	6-1	4				()45-089
	JR768A	3-8	6-6	5				JR768		3-11	6-9	5				()53-089
	JR769B	2-11	7-3	6				JR769		3-2	7-6	6				()62-089
		7-2	2-10	0						7-5	3-1	0				()11-099
9	JR754A	L 6-5	3-7	1	(OUT)		9	JR754	L	6-8	3-10	1	(IN)			()19-099
	JR756A	5-8	4-4	2				JR756		5-11	4-7	2				()28-099
	JR766A	5-0	5-0	3				JR766		5-3	5-3	3				()36-099
	JR767B	4-3	5-9	4				JR767		4-6	6-0	4				()45-099
	JR768A	3-7	6-5	5				JR768		3-10	6-8	5				()53-099
	JR769B	2-10	7-2	6				JR769		3-1	7-5	6				()62-099
		7-1	2-9	0						7-4	3-0	0				()11-109
10	JR754A	L 6-4	3-6	1	(OUT)		10	JR754	L	6-7	3-9	1	(IN)			()19-109
	JR756A	5-7	4-3	2				JR756		5-10	4-6	2				()28-109
	JR766A	4-11	4-11	3				JR766		5-2	5-2	3				()36-109
	JR767B	4-2	5-8	4				JR767		4-5	5-11	4				()45-109
	JR768A	3-6	6-4	5				JR768		3-9	6-7	5				()53-109
	JR769B	2-9	7-1	6				JR769		3-0	7-4	6				()62-109
		7-4	3-0	0						7-7	3-3	0				()11-119
11		L 6-11	2-6	0	(OUT)		11	JR754	L	7-2	2-9	0	(IN)			()11-119
	JR754A	6-2	3-3	1				JR754		6-5	3-6	1				()19-119
	JR756A	5-5	4-0	2				JR756		5-8	4-3	2				()28-119
	JR766A	4-9	4-8	3				JR766		5-0	4-11	3				()36-119
	JR767B	4-0	5-5	4				JR767		4-3	5-8	4				()45-119
	JR768A	3-4	6-1	5				JR768		3-7	6-4	5				()53-119
	JR769B	2-7	6-10	6				JR769		2-10	7-1	6				()62-119
		6-9	2-5	0						7-0	2-8	0				()11-129
12	JR754A	L 6-0	3-2	1	(OUT)		12	JR754	L	6-3	3-5	1	(IN)			()19-129
	JR756A	5-3	3-11	2				JR756		5-6	4-2	2				()28-129
	JR766A	4-7	4-7	3				JR766		4-10	4-10	3				()36-129
	JR767B	3-10	5-4	4				JR767		4-1	5-7	4				()45-129
	JR768A	3-2	6-0	5				JR768		3-5	6-3	5				()53-129
	JR769B	2-5	6-9	6				JR769		2-8	7-0	6				()62-129
		6-8	2-4	0						6-11	2-7	0				()11-139
13	JR754A	L 5-11	3-1	1	(OUT)		13	JR754	L	6-2	3-4	1	(IN)			()19-139
	JR756A	5-2	3-10	2				JR756		5-5	4-1	2				()28-139

*** CONTINUED ***

** CONTINUED **
TABLE CX2

	JR766A	4-6	4-6	3				JR766		4-9	4-9	3				()36-139
	JR767B	3-9	5-3	4				JR767		4-0	5-6	4				()45-139
	JR768A	3-1	5-11	5				JR768		3-4	6-2	5				()53-139
	JR769B	2-4	6-8	6				JR769		2-7	6-11	6				()62-139
		6-11	2-6	0	(OUT)		14		L	7-2	2-9	0	(IN)			()11-149
14	JR754A	6-2	3-3	1				JR754		6-5	3-6	1				()19-149
	JR756A	5-5	4-0	2				JR756		5-8	4-3	2				()28-149
	JR766A	4-9	4-8	3				JR766		5-0	4-11	3				()36-149
	JR767B	4-0	5-5	4				JR767		4-3	5-8	4				()45-149
	JR768A	3-4	6-1	5				JR768		3-7	6-4	5				()53-149
	JR769B	2-7	6-10	6				JR769		2-10	7-1	6				()62-149
		6-9	2-5	0						7-0	2-8	0				()11-159
15	JR754A	L 6-0	3-2	1	(OUT)		15	JR754	L	6-3	3-5	1	(IN)			()19-159
	JR756A	5-3	3-11	2				JR756		5-6	4-2	2				()28-159
	JR766A	4-7	4-7	3				JR766		4-10	4-10	3				()36-159
	JR767B	3-10	5-4	4				JR767		4-1	5-7	4				()45-159
	JR768A	3-2	6-0	5				JR768		3-5	6-3	5				()53-159
	JR769B	2-5	6-9	6				JR769		2-8	7-0	6				()62-159
		6-9	2-5	0						7-0	2-8	0				()11-169
16	JR754A	L 6-0	3-2	1	(OUT)		16	JR754	L	6-3	3-5	1	(IN)			()19-169
	JR756A	5-3	3-11	2				JR756		5-6	4-2	2				()28-169
	JR766A	4-7	4-7	3				JR766		4-10	4-10	3				()36-169
	JR767B	3-10	5-4	4				JR767		4-1	5-7	4				()45-169
	JR768A	3-2	6-0	5				JR768		3-5	6-3	5				()53-169
	JR769B	2-5	6-9	6				JR769		2-8	7-0	6				()62-169

TABLE DA

VERT EQL	FRAME POS	DROP DIM FROM CA RK SHIELD 3			DROP DIM FROM PALLET		
		CENTER OF UNIT	BOTTOM OF UNIT	TOP OF UNIT	CENTER OF UNIT	BOTTOM OF UNIT	TOP OF UNIT
62	6	1'-3"	1'-7"	0'-11"	6'-2"	5'-10"	6'-6"
53	5	2'-0"	2'-4"	1'-8"	5'-5"	5'-1"	5'-9"
45	4	2'-8"	3'-0"	2'-4"	4'-9"	4'-5"	5'-1"
36	3	3'-5"	3'-9"	3'-1"	4'-0"	3'+8"	4'-4"
28	2	4'-1"	4'-5"	3'-9"	3'-4"	3'-0"	3'-8"
19	1	4'-10"	5'-2"	4'-6"	2'-7"	2'-3"	2'-11"
11	0	5-7	5-11	5-3	1-10	1-6	2-2

FOR USE WITH AN MMSU (J5D003BD) OR CSU (J5D003FS-1) IN A LTP BAY OF ANY SWITCHING MODULE. FOR MEASUREMENT OF MTB,SCAN & DISTRIBUTE CABLESAY. LOCATED IN ANOTHER BAY.VERTICAL DIMENSIONS ARE SHOWN FROM CABLE LINE E OF SHIELD 3 & 4 OF CABLE RACK OR PALLET TO CENTER,BOTTOM OR TOP LINE OF A UNIT AT THE UPRIGHT LOCATION.

FOR TOTAL DROP LENGTH, ADD ITEM 1 & 2.

1. VERTICAL DROP DIM FROM TABLE DA.
2. ADD HORIZONTAL DIM FROM TABLE DB FOR TOTAL DROP LENGTH.

TABLE DB

? TO ----->

LEFT UPRIGHT	HORIZONTAL EQL <----- TO ?	RIGHT UPRIGHT
10"	007 THRU 012	2-7
11"	013 THRU 020	2-6
1-0	021 THRU 028	2-5
1-1	029 THRU 036	2-4
1-2	037 THRU 044	2-3
1-3	045 THRU 052	2-2
1-4	053 THRU 060	2-1
1-5	061 THRU 068	2-0
1-6	069 THRU 076	1-11
1-7	077 THRU 084	1-10
1-8	085 THRU 092	1-9
1-9	093 THRU 100	1-8
1-10	101 THRU 108	1-7
1-11	109 THRU 116	1-6
2-0	117 THRU 124	1-5
2-1	125 THRU 132	1-4
2-2	133 THRU 140	1-3
2-3	141 THRU 148	1-2
2-4	149 THRU 156	1-1
2-5	157 THRU 164	1-0
2-6	165 THRU 172	11"
2-7	173 THRU 180	10"

CABLE MEASUREMENTS TABLE INDICATING HORIZONTAL LENGTH OF CABLE, INCLUDING CONNECTOR INCREMENTS FROM UPRIGHT TO FARTHEST COMPONENT TO WHICH THE CABLE CONNECTS. TABLE INDICATES UPRIGHTS AS VIEWED FROM THE FRONT OF THE FRAME.

FOR TOTAL DROP LENGTH, ADD THE DIMENSIONS FROM TABLES DA AND DB.

COPYRIGHT @ 2001 LUCENT TECHNOLOGIES
ALL RIGHTS RESERVED

BT13

INTERCABINET CABLING
FOR
5ESS * SWITCH
*LUCENT TRADEMARK

DWG SIZE C2 | ISSUE 117

PRINTED IN U.S.A.

TABLE DC

PERIPHERAL CONTROL ASSIGNMENT IN IOP FOR GENERIC PRIOR TO 5E4(2) (3B20D ONLY) (410)

IOP	PERIPHERAL CONTROL				CIRCUIT PACK CODE	FUNCTION	EQL CONN POS 1	EQL CONN POS 2	ED-5D500-21 GROUP	CABLE DESIG
	COMM	SLOT	CHANNEL	PORT						
0	2	1	1	0 & 1	TN75C	MLT2	042-074	132 332	40	JN4
1	0	3	0	0 & 1	TN75C	AMARC DBU	133-078	145 345	40	JN4
0	2	1	0	0 & 1	TN75C	SCANS DU	042-074	145 345	40	JN4
0	2	3	1	0 & 1	TN75C	EADAS	042-062	132 332	40	JN4
0	2	3	0	1	TN75C	CTTU DU	042-062	145	43	JN5
1	3	1	0	0 & 1	TN75C	AMAT 4800 OR 9600 BAUD	142-040	145 345	40	JN4
0	2	2	1	1	TN74B	ALIT RSB	042-068	132	39	JN3
1	2	1	1	1	TN74B	RSB LTD	142-074	132	39	JN3
1	2	3	0	0 & 1	TN74C	RMAS	142-062	145 345	40	JN4
1	2	3	1	0 & 1	TN75C	SES 2	142-062	132 332	40	JN4
0	2	0	0	1	TN74B	RCVFY SCC	042-080	145	39	JN3
0	2	2	0	1	TN74B	RCVFY SCC	042-068	145	39	JN3
1	3	0	1	1	TN74B	BELTLINE B	142-046	132	39	JN3
0	2	0	1	1	TN74B	BELTLINE A	042-080	132	39	JN3
1	2	0	0	1	TN74B	RCV LOCAL	142-080	145	61	JW11
0	0	0	1	0	TN83B	NO.2 SCCS	033-102	332	38	JN2
1	0	0	1	0	TN83B	NO.2 SCCS	133-102	332	38	JN2
1	2	1	0	1	TN74B	RC VFY NAC	142-074	145	39	JN3
1	2	0	1	1	TN74B	RCV CTR	142-080	132	39	JN3
1	3	0	0	!	TN74B	TMT	142-046	145	39	JN3
1	2	2	0	1	TN74B	ROP (STLWS 1)	142-068	145	60	JW10
1	2	2	0	0	TN74B	VT100 (STLWS 1)	142-068	345	61	JW11
1	2	2	1	1	TN74B	ROP (STLWS 2)	142-068	132	60	JW10
1	2	2	1	0	TN74B	VT100 (STLWS 2)	142-068	332	61	JW11
0	3	1	0	1	TN74B	ROP (STLWS 3)	042-040	145	60	JW10
0	3	1	0	0	TN74B	VT100 (STLWS 3)	042-040	345	61	JW11
0	3	1	1	1	TN74B	ROP (STLWS 4)	042-040	132	60	JW10
0	3	1	1	0	TN74B	VT100 (STLWS 4)	042-040	332	61	JW11
0	3	2	0	1	TN74B	ROP (STLWS 5)	042-034	145	60	JW10
0	3	2	0	0	TN74B	VT100 (STLWS 5)	042-034	345	61	JW11
0	3	2	1	1	TN74B	ROP (STLWS 6)	042-034	132	60	JW10
0	3	2	1	0	TN74B	VT100 (STLWS 6)	042-034	332	61	JW11
1	3	2	0	1	TN74B	ORP T300	142-034	145	60	JW10
1	3	2	1	1	TN74B	TMT 43	142-034	132	60	JW10
1	2	2	0	0	TN74B	COL VT (STLWS 1)	142-068	345	63	JW13
1	2	2	1	0	TN74B	COL VT (STLWS 2)	142-068	332	63	JW13
0	3	1	0	0	TN74B	COL VT (STLWS 3)	042-040	345	63	JW13
0	3	1	1	0	TN74B	COL VT (STLWS 4)	042-040	332	63	JW13
0	3	2	0	0	TN74B	COL VT (STLWS 5)	042-034	345	63	JW13
0	3	2	1	0	TN74B	COL VT (STLWS 6)	042-034	332	63	JW13
1	2	2	0	1	TN74B	ROP (STLWS 1)	142-068	145	64	JW14
1	2	2	1	1	TN74B	ROP (STLWS 2)	142-068	132	64	JW14
0	3	1	0	1	TN74B	ROP (STLWS 3)	042-040	145	64	JW14
0	3	1	1	1	TN74B	ROP (STLWS 4)	042-040	132	64	JW14
0	3	2	0	1	TN74B	ROP (STLWS 5)	042-034	145	64	JW14
0	3	2	1	1	TN74B	ROP (STLWS 6)	042-034	132	64	JW14
1	2	2	0	0	TN74B	VT100 (STLWS 1)	142-068	345	65	JW15
1	2	2	1	0	TN74B	VT100 (STLWS 2)	142-068	332	65	JW15
0	3	1	0	0	TN74B	VT100 (STLWS 3)	042-040	345	65	JW15
0	3	1	1	0	TN74B	VT100 (STLWS 4)	042-040	332	65	JW15
0	3	2	0	0	TN74B	VT100 (STLWS 5)	042-034	345	65	JW15
0	3	2	1	0	TN74B	VT100 (STLWS 6)	042-034	332	65	JW15
1	2	2	0	0	TN74B	COL VT	142-068	345	66	JW16

*** CONTINUED ***

** CONTINUED **

TABLE DC

PERIPHERAL CONTROL ASSIGNMENT IN IOP FOR GENERIC PRIOR TO 5E4(2) (3B20D ONLY) (410)

IOP	PERIPHERAL CONTROL				CIRCUIT PACK CODE	FUNCTION	EQL CONN POS 1	EQL CONN POS 2	ED-5D500-21 GROUP	CABLE DESIG
	COMM	SLOT	CHANNEL	PORT						
1	2	2	1	0	TN74B	COL VT (STLWS 1)	142-068	332	66	JW16
0	3	1	0	0	TN74B	COL VT (STLWS 2)	042-040	345	66	JW16
0	3	1	1	0	TN74B	COL VT (STLWS 3)	042-040	332	66	JW16
0	3	2	0	0	TN74B	COL VT (STLWS 4)	042-034	345	66	JW16
0	3	2	1	0	TN74B	COL VT (STLWS 5)	042-034	332	66	JW16
						COL VT (STLWS 6)				

TABLE DC1

FLEXIBLE IOP ASSIGNMENT RULES FOR GENERIC 5E4(2) AND LATER (3B20D ONLY) (411)

IOP	PERIPHERAL CONTROL				EQL VERT	EQL HOR	EQL PORT 1	EQL PORT 0	CKT PACK	ED5D500-21	CA DES	FUNCTION	STATUS	NOTE
		0			033	102			TN983	G38	JN2	MTTY	ALWAYS EQPT	1
		1				094			UN33B	G20,G35	( )	SCSD OFF ALM	ALWAYS EQPT	1
	0	2				086			UN33B	G35,G( )	( )	SCSD AM ALM	ALWAYS EQPT	1
		3				078			UN145			MAG TAPE 0	ALWAYS EQPT	1
		0				062			UN33B	G( )	( )	SCSD CM ALM	CM1 >128 CM2	2,9
		1				054			UN33B	G20,G45	( )	SCSD TELCO	OPTIONAL	2
	1	2				046			UN33B	G( )	( )	SCSD CM ALM	NCL2, CNI, CM2	2,7,8
		3				038			UN33B	G( )	( )	SCSD CM ALM	CM2	2,7
0		*0	1	1,0	042	080	132	332	( )	G( )	( )	TN75C TBL DC2	OPTIONAL	4
			0	1,0			145	345						
		*1	1	1,0		074	132	332	( )	G( )	( )	TN74B TBL DC3	OPTIONAL	4
			0	1,0			145	345						
	2	*2	1	1,0		068	132	332	( )	G( )	( )	TN82 TBL DC4	OPTIONAL	4
			0	1,0			145	345						
	1	*3	1	1,0		062	132	332	( )	G( )	( )		OPTIONAL	4
			0	1,0			145	345						
		0				046			UN33B	G( )	( )	UNIX SYS LAB	UNIX SYS LAB	2,6

*** CONTINUED ***

COPYRIGHT @ 2001 LUCENT TECHNOLOGIES
ALL RIGHTS RESERVED

BT13

INTERCABINET CABLING
FOR
5ESS * SWITCH
*LUCENT TRADEMARK

DWG SIZE C2 | ISSUE 117

LUCENT TECHNOLOGIES INC | ED5D500-21 | SHEET D65 OF 292

PRINTED IN U.S.A.

** CONTINUED **
TABLE DC1

FLEXIBLE IOP ASSIGNMENT RULES FOR GENERIC 5E4(2) AND LATER (3B20D ONLY) (411)

IOP	PERIPHERAL CONTROL COMM	SLOT	CHNL	PORT	EQL VERT	HOR	PORT 1	PORT 0	CKT PACK	ED5D500-21	CA DES	FUNCTION	STATUS	NOTE
		*1	1	1,0		040	132	332	( )	G( )	( )	TN75C,TN74B, TN82	OPTIONAL	4
			0	1,0			145	345						
	3	+2	1	1,0		034	132	332	UN145 OR	G( )	( )	+ MAG TAPE 2,3 OR TBL DC2,3 OR 4	OPTIONAL	3,5
			0	1,0			145	345	( )					
		3				028			-	-	-	NO ACCESS	INACCESSIBLE	-
		0			133	102			TN983	G38	JN2	MTTY	ALWAYS EQPT	1
		1				094			UN33B	G20,G35	( )	SCSD OFF ALM	ALWAYS EQPT	1
	0	2				086			UN33B	G35,G( )	( )	SCSD AM ALM	ALWAYS EQPT	1
		+3	1	1,0		078	132	332	UN145 OR	G( )	( )	MAG TAPE 1 OR TBL DC2,3 OR 4	REQD W/2ND TAPE	3
			0	1,0			145	345	( )					
		0				062			UN33B	G( )	( )	SCSD, CM ALM	REQD W/CM1 OR >128 CM2	2,9
		1				054			UN33B	G( )	( )	SCSD TELCO ASGN	OPTIONAL	2
	1	2				046			UN33B	G( )	( )	SCSD CM ALM	NCL2,CNI,CM2	2,7,8
		3				038			UN33B	G( )	( )	SCSD CM ALM	CM2	2,7
1		*0	1	1,0	142	080	132	332	( )	G( )	( )	TN75C TBL DC2	OPTIONAL	4
			0	1,0			145	345						
		*1	1	1,0		074	132	332	( )	G( )	( )	TN74B TBL DC3	OPTIONAL	4
			0	1,0			145	345						
	2	*2	1	1,0		068	132	332	( )	G( )	( )	TN82 TBL DC4	OPTIONAL	4
			0	1,0			145	345						
		*3	1	1,0		062	132	332	( )	G( )	( )		OPTIONAL	4
			0	1,0			145	345						
		*0	1	1,0		046	132	332	( )	G( )	( )		OPTIONAL	4
			0	1,0			145	345						
		*1	1	1,0		040	132	332	( )	G( )	( )		OPTIONAL	4
	3		0	1,0			145	345						

*** CONTINUED ***

** CONTINUED **
TABLE DC1

FLEXIBLE IOP ASSIGNMENT RULES FOR GENERIC 5E4(2) AND LATER (3B20D ONLY) (411)

IOP	PERIPHERAL CONTROL COMM	SLOT	CHNL	PORT	EQL VERT	HOR	PORT 1	PORT 0	CKT PACK	ED5D500-21	CA DES	FUNCTION	STATUS	NOTE
		*2	1	1,0		034	132	332	( )	G( )	( )		OPTIONAL	4
			0	1,0			145	345						
		3				028			-	-	-	NO ACCESS	INACCESSIBLE	-

* FLEXIBLE ASSIGNMENT ALWAYS.
\+ ASSIGNED FOR ADDITIONAL MAGN TAPE (1,2), IF THEY ARE NOT REQUIRED, THIS SLOT IS AVAILABLE FOR FLEXIBLE ASGNT.

NOTE 1. THIS SLOT IS PERMANENTLY ASSIGNED TO THE FUNCTION. ASSOCIATED PERIPHERAL CONTROLLER CP IS ALWAYS EQUIPPED.
NOTE 2. THIS SLOT IS PERMANENTLY ASSIGNED TO THE STATED FUNCTION. THE ASSOCIATED PERIPHERAL CONTROLLER CP MAY OR MAY NOT BE EQUIPPED.
NOTE 3. THIS SLOT IS REQUIRED LOCATION FOR THE STATED FUNCTION. IF THE STATED FUNCTION IS NOT REQUIRED IN A GIVEN APPLICATION THIS SLOT IS AVAILABLE FOR FLEXIBLE ASGNT.
NOTE 4. THIS SLOT IS ALWAYS REQUIRED FOR FLEXIBLE ASSIGNMENT.
NOTE 5. THIS ASSIGNMENT APPLIES TO EXPORT APPL ONLY.
NOTE 6. IN APPLICATIONS INVOLVING RETROFITS TO 5E4(2) GENERIC, IF THE SCSD CONTROLLER IS ACTIVE, IN IOP2 PRIOR TO RETROFIT, IT WILL REMAIN IN IOP2. IF THE SCSD CONTROLLER IS UNEQUIPPED PRIOR TO RETROFIT, THE SCSD CONTROLLER MUST BE LOCATED IN IOP0 WHEN EQPD. ALL FACTORY 5E4(2) SHIPMENTS WILL HAVE SCSD CONTROLLER LOCATED IN IOP0 WHEN EQPD.
NOTE 7. PROVIDE ALL CM2 APPLICATIONS.
NOTE 8. PROVIDE WITH ALL NCLU2 AND OR CNI APPLICATIONS.
NOTE 9. PROVIDE WITH TMS AND MSG OR CM2, APPLICATIONS PROVIDE MMP COMUNITIES ( )12 THRU ( )15.

TABLE DC2

CABLE GROUPS FOR FLEXIBLE PC ASSIGNMENT FOR FUNCTION USING TN75C PACK

CK PACK CODE			FUNCTION	CA DESIG	ED5D500-21 GROUP	CONN POS 1	CONN POS 2
TN75C			SCANS	JN4	40	1	2
CONN 2	CONN 1		MLT2	JN4	40	1	2
			MLT2 DIAL BACK-UP	JN4	40	1	2
PORT	PORT		CTTU	JN5	43	1	
0	1	CH0	EADAS	JN4	40	1	2
345	145		RMAS	JN4	40	1	2
			SES2	JN4	40	1	2
PORT	PORT		AMAT	JN4	40	1	2
0	1	CH1	AMARC	JN4	40	1	2
332	132						
CONN 2	CONN 1						

COPYRIGHT @ 2001 LUCENT TECHNOLOGIES
ALL RIGHTS RESERVED

BT13

INTERCABINET CABLING
FOR
5ESS * SWITCH
*LUCENT TRADEMARK

DWG SIZE C2 | ISSUE 117

PRINTED IN U.S.A.

TABLE DC3

CABLE GROUPS FOR FLEXIBLE PC ASSIGNMENT FOR FUNCTION USING TN74B PACK

CK PACK CODE	FUNCTION	CA DESIG	ED5D500-21 GROUP	CONN POS 1	CONN POS 2
TN74B CONN 1 CONN 1 PORT 0 / PORT 1 CH0 345 / 145 PORT 0 / PORT 1 CH1 332 / 132 CONN 1 CONN 1	RCVFY SCC	JN3	39	1	
	RCVFY LOCAL VT	JW11	61	1	
	RCVFY RC CTR	JN3	39	1	
	RCVFY NAC	JN3	39	1	
	BELTLINE A	JN3	39	1	
	BELTLINE B	JN3	39	1	
	STLWS(1-6) ROP 50 FT.	JW10	60	1	
	STLWS(1-6) VT B/W 50FT.	JW11	61	1	
	STLWS(1-6) VT CLR 50FT.	JW13	63	1	
	STLWS(1-6) ROP 250FT.	JW14	64	1	
	STLWS(1-6) VT B/W 250FT.	JW15	65	1	
	STLWS(1-6) VT CLR 250FT.	JW16	66	1	
	ALIT RSB	JN3	39	1	
	RSB-LTD	JN3	39	1	
	TMT	JN3	39	1	
	ORP-PRINTER	JW10	60	1	
	TRAFFIC CHNL-PRINTER	JW10	60	1	
	ORP	JN3	39	1	
	VT STLWS REMOTE	JN3	39	1	
	ROP STLWS REMOTE	JN3	39	1	
	LTC LOCAL TRAFFIC	JN3	39	1	
	RCVFY DU	JN3 & JN14	39 & 70		
	REMOTE MAIN BELTLINE	JN12	43A		

TABLE DC4

CABLE GROUPS FOR FLEXIBLE PC ASSIGNMENT FOR FUNCTION USING TN82 PACK

CK PACK CODE	FUNCTION	CA DESIG	ED5D500-21 GROUP	CONN POS 1	CONN POS 2
TN82 CONN 1 PORT 1 / 145 PORT 0 / 132 CONN 1	AMATPS DU	JN16	72	1	

TABLE DC5
3B20/3B21 EQL STAMPING

ORDERING ED DRAWING AND GR NO.	CA DESIGN	CA ASSY ED DRAWING AND GR NO.	PCCA 3B20 EQL STAMPING EQL	PCCA 3B20 EQL STAMPING TERM	CSPC/ECPC/OMP 3B21 EQL STAMPING EQL	CSPC/ECPC/OMP 3B21 EQL STAMPING TERM
ED5D500-21,G20A	JV171	ED5D505-30,G171	033-094	132	019-102	132
			033-094	332	019-102	332
			033-094	532	019-102	532
			033-101	032	019-109	032
	JV173	ED5D505-30,G173	133-094	132	045-102	132
			133-094	332	045-102	332
			133-094	532	045-102	532

*** CONTINUED ***

** CONTINUED **
TABLE DC5

			133-101	032	045-109	032
	JV175	ED5D505-30,G175	033-094	145	019-102	145
			033-094	345	019-102	345
			033-094	545	019-102	545
			033-101	045	019-109	045
	JV177	ED5D505-30,G177	133-094	145	045-102	145
			133-094	345	045-102	345
			133-094	545	045-102	545
			133-101	045	045-109	045
ED5D500-21,G20B	JV179	ED5D505-30,G179	033-054	132	019-138	132
			033-054	332	019-138	332
			033-054	532	019-138	532
			033-061	032	019-145	032
	JV181	ED5D505-30,G181	133-054	132	045-138	132
			133-054	332	045-138	332
			133-054	532	045-138	532
			133-061	032	045-145	032
	JV183	ED5D505-30,G183	033-054	145	019-138	145
			033-054	345	019-138	345
			033-054	545	019-138	545
			033-061	045	019-145	045
	JV185	ED5D505-30,G185	133-054	145	045-138	145
			133-054	345	045-138	345
			133-054	545	045-138	545
			133-061	045	045-145	045
ED5D500-21,G20C	JV179	ED5D505-30,G179	033-054	132	019-138	132
			033-054	332	019-138	332
			033-054	532	019-138	532
			033-061	032	019-145	032
	JV181	ED5D505-30,G181	133-054	132	045-138	132
			133-054	332	045-138	332
			133-054	532	045-138	532
			133-061	032	045-145	032
	JV183A	ED5D505-30,G183A	033-054	145	019-138	145
			033-054	345	019-138	345
			033-054	545	019-138	545
	JV185A	ED5D505-30,G185A	133-054	145	045-138	145
			133-054	345	045-138	345
			133-054	545	045-138	545

*** CONTINUED ***

** CONTINUED **
TABLE DC5

ED5D500-21,G31	JV167	ED5D505-30,G167	033-069 OR 033-038	054 154	019-137 OR 019-154	054 154
	JV169	ED5D505-30,G169	133-069 OR 133-038	054 154	045-137 OR 045-154	054 154
ED5D500-21,G34CF	JV234	ED5D505-30,G234	033-062	146	019-110	337
	JV235	ED5D505-30,G235	133-062	146	045-110	337
ED5D500-21,G34D	JV244	ED5D505-30,G244	033-062	146	019-110	337
	JV245	ED5D505-30,G245	133-062	146	045-110	337
ED5D500-21,G35CE	JV73A	ED5D505-30,G73A	033-094	135	019-102	135
			033-094	148	019-102	148
			033-094	335	019-102	335
			033-094	348	019-102	348
			033-094	535	019-102	535
			033-094	548	019-102	548
			033-101	035	019-109	035
			033-101	048	019-109	048
	JV89A	ED5D505-30,89A	133-094	135	045-102	135
			133-094	148	045-102	148
			133-094	335	045-102	335
			133-094	348	045-102	348
			133-094	535	045-102	535
			133-094	548	045-102	548
			133-101	035	045-109	035
			133-101	048	045-109	048
	JV211	ED5D505-30,G211	060-178	319	028-060	319
	JV212	ED5D505-30,G212	160-178	319	053-060	319
ED5D500-21,43A	JN12	ED5D517-30,G12	142-046	132	053-130	132
ED5D500-21,45	JV31	ED5D505-30,G31	033-054	135	019-138	135
	JV33	ED5D505-30,G33	033-054	148	019-138	148
	JV35	ED5D505-30,G35	033-054	335	019-138	335
	JV37	ED5D505-30,G37	033-054	348	019-138	348
	JV39	ED5D505-30,G39	033-054	535	019-138	535
	JV41	ED5D505-30,G41	033-054	548	019-138	548
	JV43	ED5D505-30,G43	033-061	035	019-145	035
	JV45	ED5D505-30,G45	033-061	048	019-145	048
	JV47	ED5D505-30,G47	133-054	135	045-138	135
	JV49	ED5D505-30,G49	133-054	148	045-138	148
	JV51	ED5D505-30,G51	133-054	335	045-138	335
	JV53	ED5D505-30,G53	133-054	348	045-138	348
	JV55	ED5D505-30,G55	133-054	535	045-138	535

*** CONTINUED ***

COPYRIGHT @ 2001 LUCENT TECHNOLOGIES
ALL RIGHTS RESERVED

BT13

INTERCABINET CABLING
FOR
5ESS * SWITCH
*LUCENT TRADEMARK

DWG SIZE C2 | ISSUE 117

LUCENT TECHNOLOGIES INC | ED5D500-21 | SHEET D67 OF 292

PRINTED IN U.S.A.

** CONTINUED **
TABLE DC5

	JV57	ED5D505-30,G57	133-054	548	045-138	548
	JV59	ED5D505-30,G59	133-061	035	045-145	035
	JV61	ED5D505-30,G61	133-061	048	045-145	048
ED5D500-21,45A	JV237	ED5D505-30,G237	033-046	141	019-146	141
	JV239	ED5D505-30,G239	133-046	141	045-146	141

TABLE DC6

FLEXIBLE IOP ASSIGNMENT RULES FOR GENERIC 5E9(1) AND LATER FOR 3B21D

IOP	PERIPHERAL CONTROL COMM	SLOT	CHNL	PORT	EQL VERT	HOR	PORT 1	PORT 0	CKT PACK	ED5D500-21	CA DES	FUNCTION	STATUS	NOTE
		0			019	094			TN983 OR UN583	G38 OR G38A	JN2 OR ( )	MTTY	ALWAYS EQPT	1
		1				102			UN33B OR UN933	G20A,G20C, G35CE	( )	SCSD OFF ALM	ALWAYS EQPT	1
	0	2				110			UN33B OR UN933	G35CE, G( )	( )	SCSD AM ALM	ALWAYS EQPT	1
		3				118			( )		( )		OPTIONAL	4
		0				130			UN33B OR UN933	G( )	( )	SCSD CM ALM	CM1 >128 CM2	2,9
		1				138			UN33B OR UN933	G20A,G20C, G45	( )	SCSD TELCO	OPTIONAL	2
	1	2				146			UN33B OR UN933	G( )	( )	SCSD CM ALM	NCL2, CNI, CM2	2,7,8
		3				154			UN33B OR UN933	G( )	( )	SCSD CM ALM	CM2	2,7
0		*0	1	1,0	028	094	132	332	( )	G( )	( )	TN75C TBL DC2 OR UN582 TBL STC	OPTIONAL	4
			0	1,0			145	345						
		*1	1	1,0		102	132	332	( )	G( )	( )	TN74B TBL DC3 OR UN582 TBL STC	OPTIONAL	4
			0	1,0			145	345						
	2	*2	1	1,0		110	132	332	( )	G( )	( )	TN82 TBL DC4 OR UN582 TBL STC	OPTIONAL	4
			0	1,0			145	345						
		*3	1	1,0		118	132	332	( )	G( )	( )		OPTIONAL	4
			0	1,0			145	345						
		0				130			UN33B OR UN933	G( )	( )	UNIX SYS LAB	UNIX SYS LAB	2,6
		*1	1	1,0		138	132	332	( )	G( )	( )	TN75C,TN74B, TN82,UN582	OPTIONAL	4
	3		0	1,0			145	345						
		+2	1	1,0		146	132	332	UN145	G( )	( )	+ MAG TAPE 2,3	OPTIONAL	3,5

*** CONTINUED ***

** CONTINUED **
TABLE DC6

IOP	COMM	SLOT	CHNL	PORT	VERT	HOR	PORT 1	PORT 0	CKT PACK	ED5D500-21	CA DES	FUNCTION	STATUS	NOTE
		0	1,0			145	345		OR ( )			OR TBL DC2,3 OR 4		
		3							-	-	-	NO ACCESS	INACCESSIBLE	-
		0			045	094			TN983 OR UN583	G38 OR G38A	JN2 OR ( )	MTTY	ALWAYS EQPT	1
		1				102			UN33B OR UN933	G20A,G20C, G35CE	( )	SCSD OFF ALM	ALWAYS EQPT	1
	0	2				110			UN33B OR UN933	G35CE, G( )	( )	SCSD AM ALM	ALWAYS EQPT	1
		+3	1	1,0		118	132	332	UN145 OR	G( )	( )	MAG TAPE 1 OR TBL DC2,3 OR 4	REQD W/2ND TAPE	3
			0	1,0			145	345	( )					
		0				130			UN33B OR UN933	G( )	( )	SCSD, CM ALM	REQD W/CM1 OR >128 CM2	2,9
		1				138			UN33B OR UN933	G( )	( )	SCSD TELCO ASGN	OPTIONAL	2
	1	2				146			UN33B OR UN933	G( )	( )	SCSD CM ALM	NCL2,CNI,CM2	2,7,8
		3				154			UN33B OR UN933	G( )	( )	SCSD CM ALM	CM2	2,7
1		*0	1	1,0	053	094	132	332	( )	G( )	( )	TN75C TBL DC2 OR UN582 TBL STC	OPTIONAL	4
			0	1,0			145	345						
		*1	1	1,0		102	132	332	( )	G( )	( )	TN74B TBL DC3 OR UN582 TBL STC	OPTIONAL	4
			0	1,0			145	345						
	2	*2	1	1,0		110	132	332	( )	G( )	( )	TN82 TBL DC4 OR UN582 TBL STC	OPTIONAL	4
			0	1,0			145	345						
		*3	1	1,0		118	132	332	( )	G( )	( )		OPTIONAL	4
			0	1,0			145	345						
		*0	1	1,0		130	132	332	( )	G( )	( )		OPTIONAL	4
			0	1,0			145	345						
		*1	1	1,0		138	132	332	( )	G( )	( )		OPTIONAL	4
			0	1,0			145	345						
	3	*2	1	1,0		146	132	332	( )	G( )	( )		OPTIONAL	4
			0	1,0			145	345						
		3							-	-	-	NO ACCESS	INACCESSIBLE	-
		0			011	040			TN983 OR UN583	G38 OR G38A	JN2 OR ( )	MTTY	ALWAYS EQPT	1
		1				048			UN33B OR UN933	G20A,G20C, G35CE	( )	SCSD OFF ALM	ALWAYS EQPT	1
		0												

*** CONTINUED ***

COPYRIGHT @ 2001 LUCENT TECHNOLOGIES
ALL RIGHTS RESERVED

BT13

INTERCABINET CABLING
FOR
5ESS * SWITCH
*LUCENT TRADEMARK

DWG SIZE C2 | ISSUE 117

LUCENT TECHNOLOGIES INC | ED5D500-21 | SHEET D68 OF 292

PRINTED IN U.S.A.

** CONTINUED **
TABLE DC6

		2				056			UN33B OR UN933	G35,G( )	( )	SCSD AM ALM	ALWAYS EQPT	1
		3				064			( )		( )		OPTIONAL	4
2		0				072			UN33B OR UN933	G( )	( )	SCSD CM ALM	CM1 >128 CM2	2,9
		1				080			UN33B OR UN933	G20A,G20C, G45	( )	SCSD TELCO	OPTIONAL	2
	1	2				088			UN33B OR UN933	G( )	( )	SCSD CM ALM	NCL2, CNI, CM2	2,7,8
		3				096			UN33B OR UN933	G( )	( )	SCSD CM ALM	CM2	2,7
		0			062	040			TN983 OR UN583	G38 OR G38A	JN2 OR ( )	MTTY	ALWAYS EQPT	1
		1				048			UN33B OR UN933	G20,G35	( )	SCSD OFF ALM	ALWAYS EQPT	1
	0	2				056			UN33B OR UN933	G35,G( )	( )	SCSD AM ALM	ALWAYS EQPT	1
		+3	1	1,0		064	132	332	UN145 OR	G( )	( )	MAG TAPE 1 OR TBL DC2,3 OR 4	REQD W/2ND TAPE	3
			0	1,0			145	345	( )					
3		0				072			UN33B OR UN933	G( )	( )	SCSD, CM ALM	REQD W/CM1 OR >128 CM2	2,9
		1				080			UN33B OR UN933	G( )	( )	SCSD TELCO ASGN	OPTIONAL	2
	1	2				088			UN33B OR UN933	G( )	( )	SCSD CM ALM	NCL2,CNI,CM2	2,7,8
		3				096			UN33B OR UN933	G( )	( )	SCSD CM ALM	CM2	2,7

* FLEXIBLE ASSIGNMENT ALWAYS.
\+ ASSIGNED FOR ADDITIONAL MAGN TAPE (1,2), IF THEY ARE NOT REQUIRED, THIS SLOT IS AVAILABLE FOR FLEXIBLE ASGNT.

NOTE 1. THIS SLOT IS PERMANENTLY ASSIGNED TO THE FUNCTION. ASSOCIATED PERIPHERAL CONTROLLER CP IS ALWAYS EQUIPPED.
NOTE 2. THIS SLOT IS PERMANENTLY ASSIGNED TO THE STATED FUNCTION. THE ASSOCIATED PERIPHERAL CONTROLLER CP MAY OR MAY NOT BE EQUIPPED.
NOTE 3. THIS SLOT IS REQUIRED LOCATION FOR THE STATED FUNCTION. IF THE STATED FUNCTION IS NOT REQUIRED IN A GIVEN APPLICATION THIS SLOT IS AVAILABLE FOR FLEXIBLE ASGNT.
NOTE 4. THIS SLOT IS ALWAYS REQUIRED FOR FLEXIBLE ASSIGNMENT.
NOTE 5. THIS ASSIGNMENT APPLIES TO EXPORT APPL ONLY.
NOTE 6. IN APPLICATIONS INVOLVING RETROFITS TO 5E4(2) GENERIC, IF THE SCSD CONTROLLER IS ACTIVE, IN IOP2 PRIOR TO RETROFIT, IT WILL REMAIN IN IOP2. IF THE SCSD CONTROLLER IS UNEQUIPPED PRIOR TO RETROFIT, THE SCSD CONTROLLER MUST BE LOCATED IN IOP0 WHEN EQPD. ALL FACTORY 5E4(2) SHIPMENTS WILL HAVE SCSD CONTROLLER LOCATED IN IOP0 WHEN EQPD.
NOTE 7. PROVIDE ALL CM2 APPLICATIONS.
NOTE 8. PROVIDE WITH ALL NCLU2 AND OR CNI APPLICATIONS.

*** CONTINUED ***

** CONTINUED **
TABLE DC6

NOTE 9. PROVIDE WITH TMS AND MSG OR CM2, APPLICATIONS PROVIDE MMP COMUNITIES ( )12 THRU ( )15.

TABLE DD

FUSE ASSIGNMENT			CONNECTING INFORMATION					DROP DIMENSIONS					
				ATU-E (J5D003AG)		FPO (J5D003AJ)		FP	0	1	2	3	4
ATU-E NBR		FUSE NBR	LEAD DESIG	EQL	TERM	HOR EQL	TERM	POS	EQL 064	EQL 062	EQL 060	EQL 058	EQL 056
1ST	+48V 0	1T	+48V 0	( )-014	OBO	FB 033	4T	L	3-1	3-3	3-5	3-7	3-9
*	RTN		RTN 0	( )-085		GRD 041	10T						
	+48V 1	13T	+48V 1	( )-106	OBO	FB 105	4T	R	3-8	3-10	4	4-2	4-4
	RTN		RTN 1	( )-177		GRD 113	10T						
2ND	+48V 0	1B	+48V 0	( )-014	OBO	FB 033	4B	L	3-1	3-3	3-5	3-7	3-9
*	RTN		RTN 0	( )-085		GRD 041	10B						
	+48V 1	13B	+48V 1	( )-106	OBO	FB 105	4B	R	3-8	3-10	4	4-2	4-4
	RTN		RTN 1	( )-177		GRD 113	10B						
3RD	+48V 0	2T	+48V 0	( )-014	OBO	FB 033	3T	L	3-1	3-3	3-5	3-7	3-9
*	RTN		RTN 0	( )-085		GRD 041	8T						
	+48V 1	14T	+48V 1	( )-106	OBO	FB 105	3T	R	3-8	3-10	4	4-2	4-4
	RTN		RTN 1	( )-177		GRD 113	8T						
4TH	+48V 0	2B	+48V 0	( )-014	OBO	FB 033	3B	L	3-1	3-3	3-5	3-7	3-9
*	RTN		RTN 0	( )-085		GRD 041	8B						
	+48V 1	14B	+48V 1	( )-106	OBO	FB 105	3B	R	3-8	3-10	4	4-2	4-4
	RTN		RTN 1	( )-177		GRD 113	8B						
5TH	+48V 0	3T	+48V 0	( )-014	OBO	FB 033	2T	L	3-1	3-3	3-5	3-7	3-9
*	RTN		RTN 0	( )-085		GRD 041	6T						
	+48V 1	15T	+48V 1	( )-106	OBO	FB 105	2T	R	3-8	3-10	4	4-2	4-4
	RTN		RTN 1	( )-177		GRD 113	6T						
6TH	+48V 0	3B	+48V 0	( )-014	OBO	FB 033	2B	L	3-1	3-3	3-5	3-7	3-9
*	RTN		RTN 0	( )-085		GRD 041	6B						
	+48V 1	15B	+48V 1	( )-106	OBO	FB 105	2B	R	3-8	3-10	4	4-2	4-4
	RTN		RTN 1	( )-177		GRD 113	6B						
7TH	+48V 0	4T	+48V 0	( )-014	OBO	FB 033	1T	L	3-1	3-3	3-5	3-7	3-9
*	RTN		RTN 0	( )-085		GRD 041	4T						
	+48V 1	16T	+48V 1	( )-106	OBO	FB 105	1T	R	3-8	3-10	4	4-2	4-4
	RTN		RTN 1	( )-177		GRD 113	4T						
8TH	+48V 0	4B	+48V 0	( )-014	OBO	FB 033	1B	L	3-1	3-3	3-5	3-7	3-9
*	RTN		RTN 0	( )-085		GRD 041	4B						
	+48V 1	16B	+48V 1	( )-106	OBO	FB 105	1B	R	3-8	3-10	4	4-2	4-4
	RTN		RTN 1	( )-177		GRD 113	4B						
9TH	+48V 0	5T	+48V 0	( )-014	OBO	FB 057	4T	L	3-4	3-6	3-8	3-10	4-0
*	RTN		RTN 0	( )-085		GRD 041	2T						
	+48V 1	17T	+48V 1	( )-106	OBO	FB 129	4T	R	3-5	3-7	3-9	3-11	4-1
	RTN		RTN 1	( )-177		GRD 113	2T						
10TH	+48V 0	5B	+48V 0	( )-014	OBO	FB 057	4B	L	3-4	3-6	3-8	3-10	4-0
*	RTN		RTN 0	( )-085		GRD 041	2B						
	+48V 1	17B	+48V 1	( )-106	OBO	FB 129	4B	R	3-5	3-7	3-9	3-11	4-1
	RTN		RTN 1	( )-177		GRD 113	2B						
11TH	+48V 0	6T	+48V 0	( )-014	OBO	FB 057	3T	L	3-4	3-6	3-8	3-10	4-0
*	RTN		RTN 0	( )-085		GRD 041	1T						
	+48V 1	18T	+48V 1	( )-106	OBO	FB 129	3T	R	3-5	3-7	3-9	3-11	4-1
	RTN		RTN 1	( )-177		GRD 113	1T						

*** CONTINUED ***

COPYRIGHT @ 2001 LUCENT TECHNOLOGIES
ALL RIGHTS RESERVED

BT13

INTERCABINET CABLING
FOR
5ESS * SWITCH
*LUCENT TRADEMARK

DWG SIZE C2 | ISSUE 117

** CONTINUED **
TABLE DD

FUSE ASSIGNMENT			CONNECTING INFORMATION					DROP DIMENSIONS					
				ATU-E (J5D003AG)		FPO (J5D003AJ)		FP	0	1	2	3	4
ATU-E NBR		FUSE NBR	LEAD DESIG	EQL	TERM	HOR EQL	TERM	POS	EQL 064	EQL 062	EQL 060	EQL 058	EQL 056
12TH *	+48V 0 RTN	6B	+48V 0 RTN 0	( )-014 ( )-085	OBO	FB 057 GRD 041	3B 1B	L	3-4	3-6	3-8	3-10	4-0
	+48V 1 RTN	18B	+48V 1 RTN 1	( )-106 ( )-177	OBO	FB 129 GRD 113	3B 1B	R	3-5	3-7	3-9	3-11	4-1
13TH *	+48V 0 RTN	7T	+48V 0 RTN 0	( )-014 ( )-085	OBO	FB 057 GRD 073	2T 10T	L	3-4	3-6	3-8	3-10	4-0
	+48V 1 RTN	19T	+48V 1 RTN 1	( )-106 ( )-177	OBO	FB 129 GRD 145	2T 10T	R	3-5	3-7	3-9	3-11	4-1
14TH *	+48V 0 RTN	7B	+48V 0 RTN 0	( )-014 ( )-085	OBO	FB 057 GRD 073	2B 10B	L	3-4	3-6	3-8	3-10	4-0
	+48V 1 RTN	19B	+48V 1 RTN 1	( )-106 ( )-177	OBO	FB 129 GRD 145	2B 10B	R	3-5	3-7	3-9	3-11	4-1
15TH *	+48V 0 RTN	8T	+48V 0 RTN 0	( )-014 ( )-085	OBO	FB 057 GRD 073	1T 8T	L	3-4	3-6	3-8	3-10	4-0
	+48V 1 RTN	20T	+48V 1 RTN 1	( )-106 ( )-177	OBO	FB 129 GRD 145	1T 8T	R	3-5	3-7	3-9	3-11	4-1
16TH *	+48V 0 RTN	8B	+48V 0 RTN 0	( )-014 ( )-085	OBO	FB 057 GRD 073	1B 8B	L	3-4	3-6	3-8	3-10	4-0
	+48V 1 RTN	20B	+48V 1 RTN 1	( )-106 ( )-177	OBO	FB 129 GRD 145	1B 8B	R	3-5	3-7	3-9	3-11	4-1
17TH *	+48V 0 RTN	9T	+48V 0 RTN 0	( )-014 ( )-085	OBO	FB 081 GRD 073	4T 6T	L	3-7	3-9	3-11	4-1	4-3
	+48V 1 RTN	21T	+48V 1 RTN 1	( )-106 ( )-177	OBO	FB 153 GRD 145	4T 6T	R	3-2	3-4	3-6	3-8	3-10
18TH *	+48V 0 RTN	9B	+48V 0 RTN 0	( )-014 ( )-085	OBO	FB 081 GRD 073	4B 6B	L	3-7	3-9	3-11	4-1	4-3
	+48V 1 RTN	21B	+48V 1 RTN 1	( )-106 ( )-177	OBO	FB 153 GRD 145	4B 6B	R	3-2	3-4	3-6	3-8	3-10
19TH *	+48V 0 RTN	10T	+48V 0 RTN 0	( )-014 ( )-085	OBO	FB 081 GRD 073	3T 4T	L	3-7	3-9	3-11	4-1	4-3
	+48V 1 RTN	22T	+48V 1 RTN 1	( )-106 ( )-177	OBO	FB 153 GRD 145	3T 4T	R	3-2	3-4	3-6	3-8	3-10
20TH *	+48V 0 RTN	10B	+48V 0 RTN 0	( )-014 ( )-085	OBO	FB 081 GRD 073	3B 4B	L	3-7	3-9	3-11	4-1	4-3
	+48V 1 RTN	22B	+48V 1 RTN 1	( )-106 ( )-177	OBO	FB 153 GRD 145	3B 4B	R	3-2	3-4	3-6	3-8	3-10
21ST *	+48V 0 RTN	11T	+48V 0 RTN 0	( )-014 ( )-085	OBO	FB 081 GRD 073	2T 2T	L	3-7	3-9	3-11	4-1	4-3
	+48V 1 RTN	23T	+48V 1 RTN 1	( )-106 ( )-177	OBO	FB 153 GRD 145	2T 2T	R	3-2	3-4	3-6	3-8	3-10
22ND *	+48V 0 RTN	11B	+48V 0 RTN 0	( )-014 ( )-085	OBO	FB 081 GRD 073	2B 2B	L	3-7	3-9	3-11	4-1	4-3
	+48V 1 RTN	23B	+48V 1 RTN 1	( )-106 ( )-177	OBO	FB 153 GRD 145	2B 2B	R	3-2	3-4	3-6	3-8	3-10
23RD *	+48V 0 RTN	12T	+48V 0 RTN 0	( )-014 ( )-085	OBO	FB 081 GRD 073	1T 1T	L	3-7	3-9	3-11	4-1	4-3
	+48V 1 RTN	24T	+48V 1	( )-106	OBO	FB 153	1T	R	3-2	3-4	3-6	3-8	3-10

*** CONTINUED ***

** CONTINUED **
TABLE DD

FUSE ASSIGNMENT			CONNECTING INFORMATION					DROP DIMENSIONS					
				ATU-E (J5D003AG)		FPO (J5D003AJ)		FP	0	1	2	3	4
ATU-E NBR		FUSE NBR	LEAD DESIG	EQL	TERM	HOR EQL	TERM	POS	EQL 064	EQL 062	EQL 060	EQL 058	EQL 056
	RTN		RTN 1	( )-177		GRD 145	1T						
24TH *	+48V 0 RTN	12B	+48V 0 RTN 0	( )-014 ( )-085	OBO	FB 081 GRD 073	1B 1B	L	3-7	3-9	3-11	4-1	4-3
	+48V 1 RTN	24B	+48V 1 RTN 1	( )-106 ( )-177	OBO	FB 153 GRD 145	1B 1B	R	3-2	3-4	3-6	3-8	3-10

(*) FUSE ASSIGNMENT FOR FP (1-4) FOR ATU-E (25-115) SHALL BE MADE IN SAME MANOR AS SHOWN FOR FP 0 AND ATU-E (1-24)

TABLE E1

ODL50 NCT LINKS FROM MCTU OR MCTU2 TO TMS (CM1)								
NCT DESIG	JL101	JL103	JL105	JL107	JL102	JL104	JL106	JL108
NCT LINK	0A		0B		1A		1B	
SM() SMC1	XMTR	REC	XMTR	REC	XMTR	REC	XMTR	REC
G4 OR G12 MCTU J5D003EC	136-084-332 982TR		136-084-300 982TS		136-098-332 982TR		136-098-300 982TS	
G4A OR G12A MCTU2 J5D003LA	119-156-332 982TR OR 982TRA		119-156-300 982TS OR 982TSA		128-156-332 982TR OR 982TRA		128-156-300 982TS OR 982TSA	
	TMS PORTS							
SM 1-30	REC	XMTR	REC	XMTR	REC	XMTR	REC	XMTR
SM 1	053-062-145	053-062-132	028-062-145	028-062-132	153-062-145	153-062-132	128-062-145	128-062-132
SM 2	053-062-100	053-062-113	028-062-100	028-062-113	153-062-100	153-062-113	128-062-100	128-062-113
SM 3	053-052-145	053-052-132	028-052-145	028-052-132	153-052-145	153-052-132	128-052-145	128-052-132
SM 4	053-052-100	053-052-113	028-052-100	028-052-113	153-052-100	153-052-113	128-052-100	128-052-113
SM 5	053-042-145	053-042-132	028-042-145	028-042-132	153-042-145	153-042-132	128-042-145	128-042-132
SM 6	053-042-100	053-042-113	028-042-100	028-042-113	153-042-100	153-042-113	128-042-100	128-042-113
SM 7	053-126-145	053-126-132	028-126-145	028-126-132	153-126-145	153-126-132	128-126-145	128-126-132
SM 8	053-126-100	053-126-113	028-126-100	028-126-113	153-126-100	153-126-113	128-126-100	128-126-113
SM 9	053-136-	053-136-	028-136-	028-136-	153-136-	153-136-	128-136-	128-136-

*** CONTINUED ***

** CONTINUED **
TABLE E1

ODL50 NCT LINKS FROM MCTU OR MCTU2 TO TMS (CM1)								
NCT DESIG	JL101	JL103	JL105	JL107	JL102	JL104	JL106	JL108
NCT LINK	0A		0B		1A		1B	
SM() SMC1	XMTR	REC	XMTR	REC	XMTR	REC	XMTR	REC
G4 OR G12 MCTU J5D003EC	136-084-332 982TR		136-084-300 982TS		136-098-332 982TR		136-098-300 982TS	
G4A OR G12A MCTU2 J5D003LA	119-156-332 982TR OR 982TRA		119-156-300 982TS OR 982TSA		128-156-332 982TR OR 982TRA		128-156-300 982TS OR 982TSA	
	145	132	145	132	145	132	145	132
SM 10	053-136-100	053-136-113	028-136-100	028-136-113	153-136-100	153-136-113	128-136-100	128-136-113
SM 11	053-146-145	053-146-132	028-146-145	028-146-132	153-146-145	153-146-132	128-146-145	128-146-132
SM 12	053-146-100	053-146-113	028-146-100	028-146-113	153-146-100	153-146-113	128-146-100	128-146-113
SM 13	053-156-145	053-156-132	028-156-145	028-156-132	153-156-145	153-156-132	128-156-145	128-156-132
SM 14	053-156-100	053-156-113	028-156-100	028-156-113	153-156-100	153-156-113	128-156-100	128-156-113
SM 15	045-072-145	045-072-132	019-072-145	019-072-132	145-072-145	145-072-132	119-072-145	119-072-132
SM 16	045-072-100	045-072-113	019-072-100	019-072-113	145-072-100	145-072-113	119-072-100	119-072-113
SM 17	045-062-145	045-062-132	019-062-145	019-062-132	145-062-145	145-062-132	119-062-145	119-062-132
SM 18	045-062-100	045-062-113	019-062-100	019-062-113	145-062-100	145-062-113	119-062-100	119-062-113
SM 19	045-052-145	045-052-132	019-052-145	019-052-132	145-052-145	145-052-132	119-052-145	119-052-132
SM 20	045-052-100	045-052-113	019-052-100	019-052-113	145-052-100	145-052-113	119-052-100	119-052-113
SM 21	045-042-145	045-042-132	019-042-145	019-042-132	145-042-145	145-042-132	119-042-145	119-042-132
SM 22	045-042-100	045-042-113	019-042-100	019-042-113	145-042-100	145-042-113	119-042-100	119-042-113
SM 23	045-126-145	045-126-132	019-126-145	019-126-132	145-126-145	145-126-132	119-126-145	119-126-132
SM 24	045-126-	045-126-	019-126-	019-126-	145-126-	145-126-	119-126-	119-126-

*** CONTINUED ***

COPYRIGHT @ 2001 LUCENT TECHNOLOGIES
ALL RIGHTS RESERVED

BT13

INTERCABINET CABLING
FOR
5ESS * SWITCH
*LUCENT TRADEMARK

DWG SIZE C2 | ISSUE 117

LUCENT TECHNOLOGIES INC | ED5D500-21 | SHEET D70 OF 292

PRINTED IN U.S.A.

** CONTINUED **
TABLE E1

ODL50 NCT LINKS FROM MCTU OR MCTU2 TO TMS (CM1)

NCT DESIG	JL101	JL103	JL105	JL107	JL102	JL104	JL106	JL108
NCT LINK	0A		0B		1A		1B	
SM() SMC1	XMTR	REC	XMTR	REC	XMTR	REC	XMTR	REC
G4 OR G12 MCTU J5D003EC	136-084-332 982TR		136-084-300 982TS		136-098-332 982TR		136-098-300 982TS	
G4A OR G12A MCTU2 J5D003LA	119-156-332 982TR OR 982TRA		119-156-300 982TS OR 982TSA		128-156-332 982TR OR 982TRA		128-156-300 982TS OR 982TSA	
	100	113	100	113	100	113	100	113
SM 25	045-136-145	045-136-132	019-136-145	019-136-132	145-136-145	145-136-132	119-136-145	119-136-132
SM 26	045-136-100	045-136-113	019-136-100	019-136-113	145-136-100	145-136-113	119-136-100	119-136-113
SM 27	045-146-145	045-146-132	019-146-145	019-146-132	145-146-145	145-146-132	119-146-145	119-146-132
SM 28	045-146-100	045-146-113	019-146-100	019-146-113	145-146-100	145-146-113	119-146-100	119-146-113
SM 29	045-156-145	045-156-132	019-156-145	019-156-132	145-156-145	145-156-132	119-156-145	119-156-132
SM 30	045-156-100	045-156-113	019-156-100	019-156-113	145-156-100	145-156-113	119-156-100	119-156-113

TABLE E2

ORM (HOST OFFICE ONLY)
ODL50 NCT LINKS FROM TRCU TO TMS (CM1)

NCT DESIG	JL101	JL103	JL105	JL107	JL102	JL104	JL106	JL108
NCT LINKS	0A		0B		1A		1B	
	XMTR	REC	XMTR	REC	XMTR	REC	XMTR	REC
GR 8D OR 12 E M() HOST TRCU-1 1ST CKT J5D003ED	( )-066-132 982TR OR 982TRA		( )-082-132 982TR OR 982TRA		( )-114-132 982TR OR 982TRA		( )-130-132 982TR OR 982TRA	
M() HOST TRCU-1 2ND CKT J5D003ED	( )-026-132 982TR OR 982TRA		( )-042-132 982TR OR 982TRA		( )-154-132 982TR OR 982TRA		( )-170-132 982TR OR 982TRA	
SM 1-30	TMS PORTS							
	REC	XMTR	REC	XMTR	REC	XMTR	REC	XMTR
	100	113	100	113	100	113	100	113
SM 3	053-052-145	053-052-132	028-052-145	028-052-132	153-052-145	153-052-132	128-052-145	128-052-132
SM 4	053-052-100	053-052-113	028-052-100	028-052-113	153-052-100	153-052-113	128-052-100	128-052-113
SM 5	053-042-145	053-042-132	028-042-145	028-042-132	153-042-145	153-042-132	128-042-145	128-042-132
SM 6	053-042-100	053-042-113	028-042-100	028-042-113	153-042-100	153-042-113	128-042-100	128-042-113
SM 7	053-126-145	053-126-132	028-126-145	028-126-132	153-126-145	153-126-132	128-126-145	128-126-132
SM 8	053-126-100	053-126-113	028-126-100	028-126-113	153-126-100	153-126-113	128-126-100	128-126-113
SM 9	053-136-145	053-136-132	028-136-145	028-136-132	153-136-145	153-136-132	128-136-145	128-136-132
SM 10	053-136-100	053-136-113	028-136-100	028-136-113	153-136-100	153-136-113	128-136-100	128-136-113
SM 11	053-146-145	053-146-132	028-146-145	028-146-132	153-146-145	153-146-132	128-146-145	128-146-132
SM 12	053-146-100	053-146-113	028-146-100	028-146-113	153-146-100	153-146-113	128-146-100	128-146-113
SM 13	053-156-145	053-156-132	028-156-145	028-156-132	153-156-145	153-156-132	128-156-145	128-156-132
SM 14	053-156-100	053-156-113	028-156-100	028-156-113	153-156-100	153-156-113	128-156-100	128-156-113
SM 15	045-072-145	045-072-132	019-072-145	019-072-132	145-072-145	145-072-132	119-072-145	119-072-132

*** CONTINUED ***

** CONTINUED **
TABLE E2

ORM (HOST OFFICE ONLY)
ODL50 NCT LINKS FROM TRCU TO TMS (CM1)

NCT DESIG	JL101	JL103	JL105	JL107	JL102	JL104	JL106	JL108
NCT LINKS	0A		0B		1A		1B	
	XMTR	REC	XMTR	REC	XMTR	REC	XMTR	REC
GR 8D OR 12 E M() HOST TRCU-1 1ST CKT J5D003ED	( )-066-132 982TR OR 982TRA		( )-082-132 982TR OR 982TRA		( )-114-132 982TR OR 982TRA		( )-130-132 982TR OR 982TRA	
M() HOST TRCU-1 2ND CKT J5D003ED	( )-026-132 982TR OR 982TRA		( )-042-132 982TR OR 982TRA		( )-154-132 982TR OR 982TRA		( )-170-132 982TR OR 982TRA	
SM 1-30	TMS PORTS							
	REC	XMTR	REC	XMTR	REC	XMTR	REC	XMTR
SM 16	045-072-100	045-072-113	019-072-100	019-072-113	145-072-100	145-072-113	119-072-100	119-072-113
SM 17	045-062-145	045-062-132	019-062-145	019-062-132	145-062-145	145-062-132	119-062-145	119-062-132
SM 18	045-062-100	045-062-113	019-062-100	019-062-113	145-062-100	145-062-113	119-062-100	119-062-113
SM 19	045-052-145	045-052-132	019-052-145	019-052-132	145-052-145	145-052-132	119-052-145	119-052-132
SM 20	045-052-100	045-052-113	019-052-100	019-052-113	145-052-100	145-052-113	119-052-100	119-052-113
SM 21	045-042-145	045-042-132	019-042-145	019-042-132	145-042-145	145-042-132	119-042-145	119-042-132
SM 22	045-042-100	045-042-113	019-042-100	019-042-113	145-042-100	145-042-113	119-042-100	119-042-113
SM 23	045-126-145	045-126-132	019-126-145	019-126-132	145-126-145	145-126-132	119-126-145	119-126-132
SM 24	045-126-100	045-126-113	019-126-100	019-126-113	145-126-100	145-126-113	119-126-100	119-126-113
SM 25	045-136-145	045-136-132	019-136-145	019-136-132	145-136-145	145-136-132	119-136-145	119-136-132
SM 26	045-136-100	045-136-113	019-136-100	019-136-113	145-136-100	145-136-113	119-136-100	119-136-113
SM 27	045-146-145	045-146-132	019-146-145	019-146-132	145-146-145	145-146-132	119-146-145	119-146-132
SM 28	045-146-100	045-146-113	019-146-100	019-146-113	145-146-100	145-146-113	119-146-100	119-146-113
SM 29	045-156-145	045-156-132	019-156-145	019-156-132	145-156-145	145-156-132	119-156-145	119-156-132

*** CONTINUED ***

** CONTINUED **
TABLE E2

ORM (HOST OFFICE ONLY)
ODL50 NCT LINKS FROM TRCU TO TMS (CM1)

NCT DESIG	JL101	JL103	JL105	JL107	JL102	JL104	JL106	JL108
NCT LINKS	0A		0B		1A		1B	
	XMTR	REC	XMTR	REC	XMTR	REC	XMTR	REC
GR 8D OR 12 E M() HOST TRCU-1 1ST CKT J5D003ED	( )-066-132 982TR OR 982TRA		( )-082-132 982TR OR 982TRA		( )-114-132 982TR OR 982TRA		( )-130-132 982TR OR 982TRA	
M() HOST TRCU-1 2ND CKT J5D003ED	( )-026-132 982TR OR 982TRA		( )-042-132 982TR OR 982TRA		( )-154-132 982TR OR 982TRA		( )-170-132 982TR OR 982TRA	
SM 1-30	TMS PORTS							
	REC	XMTR	REC	XMTR	REC	XMTR	REC	XMTR
	145	132	145	132	145	132	145	132
SM 30	045-156-100	045-156-113	019-156-100	019-156-113	145-156-100	145-156-113	119-156-100	119-156-113

TABLE E3

ORM (HOST OFFICE ONLY)
ODL50 NCT LINKS FROM TRCU2 TO TMS (CM1)

NCT DESIG	JL101	JL103	JL105	JL107	JL102	JL104	JL106	JL108
NCT LINKS	0A		0B		1A		1B	
	XMTR	REC	XMTR	REC	XMTR	REC	XMTR	REC
GR 8B OR 12 C M() HOST TRCU2 1ST CKT J5D003ED	( )-022-132 982TR OR 982TRA		( )-030-132 982TR OR 982TRA		( )-138-132 982TR OR 982TRA		( )-146-132 982TR OR 982TRA	
M() HOST TRCU2 2ND CKT J5D003ED	( )-038-132 982TR OR 982TRA		( )-046-132 982TR OR 982TRA		( )-154-132 982TR OR 982TRA		( )-162-132 982TR OR 982TRA	
SM 1-30	TMS PORTS							
	REC	XMTR	REC	XMTR	REC	XMTR	REC	XMTR
SM 1	053-062-145	053-062-132	028-062-145	028-062-132	153-062-145	153-062-132	128-062-145	128-062-132
SM 2	053-062-100	053-062-113	028-062-100	028-062-113	153-062-100	153-062-113	128-062-100	128-062-113
SM 3	053-052-145	053-052-132	028-052-145	028-052-132	153-052-145	153-052-132	128-052-145	128-052-132
SM 4	053-052-100	053-052-113	028-052-100	028-052-113	153-052-100	153-052-113	128-052-100	128-052-113
SM 5	053-042-145	053-042-132	028-042-145	028-042-132	153-042-145	153-042-132	128-042-145	128-042-132
SM 6	053-	053-	028-	028-	153-	153-	128-	128-

*** CONTINUED ***

COPYRIGHT @ 2001 LUCENT TECHNOLOGIES
ALL RIGHTS RESERVED

BT13

INTERCABINET CABLING
FOR
5ESS * SWITCH
*LUCENT TRADEMARK

DWG SIZE C2 | ISSUE 117

LUCENT TECHNOLOGIES INC | ED5D500-21 | SHEET D71 OF 292

PRINTED IN U.S.A.

** CONTINUED **
TABLE E3

ORM (HOST OFFICE ONLY)
ODL50 NCT LINKS FROM TRCU2 TO TMS (CM1)

NCT DESIG	JL101	JL103	JL105	JL107	JL102	JL104	JL106	JL108
NCT LINKS	0A		0B		1A		1B	
	XMTR	REC	XMTR	REC	XMTR	REC	XMTR	REC
GR 8B OR 12 C	M() HOST TRCU2 1ST CKT J5D003ED	( )-022-132 982TR OR 982TRA	( )-030-132 982TR OR 982TRA	( )-138-132 982TR OR 982TRA	( )-146-132 982TR OR 982TRA			
	M() HOST TRCU2 2ND CKT J5D003ED	( )-038-132 982TR OR 982TRA	( )-046-132 982TR OR 982TRA	( )-154-132 982TR OR 982TRA	( )-162-132 982TR OR 982TRA			
SM 1-30	TMS PORTS							
	REC	XMTR	REC	XMTR	REC	XMTR	REC	XMTR
	042-100	042-113	042-100	042-113	042-100	042-113	042-100	042-113
SM 7	053-126-145	053-126-132	028-126-145	028-126-132	153-126-145	153-126-132	128-126-145	128-126-132
SM 8	053-126-100	053-126-113	028-126-100	028-126-113	153-126-100	153-126-113	128-126-100	128-126-113
SM 9	053-136-145	053-136-132	028-136-145	028-136-132	153-136-145	153-136-132	128-136-145	128-136-132
SM 10	053-136-100	053-136-113	028-136-100	028-136-113	153-136-100	153-136-113	128-136-100	128-136-113
SM 11	053-146-145	053-146-132	028-146-145	028-146-132	153-146-145	153-146-132	128-146-145	128-146-132
SM 12	053-146-100	053-146-113	028-146-100	028-146-113	153-146-100	153-146-113	128-146-100	128-146-113
SM 13	053-156-145	053-156-132	028-156-145	028-156-132	153-156-145	153-156-132	128-156-145	128-156-132
SM 14	053-156-100	053-156-113	028-156-100	028-156-113	153-156-100	153-156-113	128-156-100	128-156-113
SM 15	045-072-145	045-072-132	019-072-145	019-072-132	145-072-145	145-072-132	119-072-145	119-072-132
SM 16	045-072-100	045-072-113	019-072-100	019-072-113	145-072-100	145-072-113	119-072-100	119-072-113
SM 17	045-062-145	045-062-132	019-062-145	019-062-132	145-062-145	145-062-132	119-062-145	119-062-132
SM 18	045-062-100	045-062-113	019-062-100	019-062-113	145-062-100	145-062-113	119-062-100	119-062-113
SM 19	045-052-145	045-052-132	019-052-145	019-052-132	145-052-145	145-052-132	119-052-145	119-052-132

*** CONTINUED ***

** CONTINUED **
TABLE E3

ORM (HOST OFFICE ONLY)
ODL50 NCT LINKS FROM TRCU2 TO TMS (CM1)

NCT DESIG	JL101	JL103	JL105	JL107	JL102	JL104	JL106	JL108
NCT LINKS	0A		0B		1A		1B	
	XMTR	REC	XMTR	REC	XMTR	REC	XMTR	REC
GR 8B OR 12 C	M() HOST TRCU2 1ST CKT J5D003ED	( )-022-132 982TR OR 982TRA	( )-030-132 982TR OR 982TRA	( )-138-132 982TR OR 982TRA	( )-146-132 982TR OR 982TRA			
	M() HOST TRCU2 2ND CKT J5D003ED	( )-038-132 982TR OR 982TRA	( )-046-132 982TR OR 982TRA	( )-154-132 982TR OR 982TRA	( )-162-132 982TR OR 982TRA			
SM 1-30	TMS PORTS							
	REC	XMTR	REC	XMTR	REC	XMTR	REC	XMTR
SM 20	045-052-100	045-052-113	019-052-100	019-052-113	145-052-100	145-052-113	119-052-100	119-052-113
SM 21	045-042-145	045-042-132	019-042-145	019-042-132	145-042-145	145-042-132	119-042-145	119-042-132
SM 22	045-042-100	045-042-113	019-042-100	019-042-113	145-042-100	145-042-113	119-042-100	119-042-113
SM 23	045-126-145	045-126-132	019-126-145	019-126-132	145-126-145	145-126-132	119-126-145	119-126-132
SM 24	045-126-100	045-126-113	019-126-100	019-126-113	145-126-100	145-126-113	119-126-100	119-126-113
SM 25	045-136-145	045-136-132	019-136-145	019-136-132	145-136-145	145-136-132	119-136-145	119-136-132
SM 26	045-136-100	045-136-113	019-136-100	019-136-113	145-136-100	145-136-113	119-136-100	119-136-113
SM 27	045-146-145	045-146-132	019-146-145	019-146-132	145-146-145	145-146-132	119-146-145	119-146-132
SM 28	045-146-100	045-146-113	019-146-100	019-146-113	145-146-100	145-146-113	119-146-100	119-146-113
SM 29	045-156-145	045-156-132	019-156-145	019-156-132	145-156-145	145-156-132	119-156-145	119-156-132
SM 30	045-156-100	045-156-113	019-156-100	019-156-113	145-156-100	145-156-113	119-156-100	119-156-113

TABLE F1

SINGLE FABRIC
ODL50 NCT LINKS FROM MCTU OR MCTU2 OR MCTU3 TO CM2

CABLE DESIG	JL101	JL103	JL105	JL107	JL102	JL104	JL106	JL108
NCT	0A		0B		1A		1B	
LINKS	XMTR	REC	XMTR	REC	XMTR	REC	XMTR	REC
SM () SMC 1 MCTU G10 OR G12G	136-084-332 982TR OR 982TRA		136-084-300 982TS OR 982TSA		136-098-332 982TR OR 982TRA		136-098-300 982TS OR 982TSA	
SM () SMC 1 MCTU2 G10A OR G12H	119-156-332 982TR OR 982TRA		119-156-300 982TS OR 982TSA		128-156-332 982TR OR 982TRA		128-156-300 982TS OR 982TSA	
SM () SMC1 MCTU3 G15	( )-084-332 982TRC	( )-084-345	( )-084-313 982TRC	( )-084-300	( )-176-332 982TRC	( )-176-345	( )-176-313 982TRC	( )-176-300

CM2 PORTS

SM NBR	CM2 '0' SIDE 982TT RA	TA	RB	TB	CM2 '1' SIDE 982TT RA	TA	RB	TB
SM1	536-088-132				636-088-132			
SM2	536-080-132				636-080-132			
SM3	536-080-100				636-080-100			
SM4	536-072-132				636-072-132			
SM5	536-072-100				636-072-100			
SM6	536-064-132				636-064-132			
SM7	536-064-100				636-064-100			
SM8	536-056-132				636-056-132			
SM9	536-056-100				636-056-100			
SM10	536-048-132				636-048-132			
SM11	536-048-100				636-048-100			
SM12	536-040-132				636-040-132			
SM13	536-040-100				636-040-100			
SM14	536-032-132				636-032-132			
SM15	536-032-100				636-032-100			
SM16	519-088-132				619-088-132			
SM17	519-080-132				619-080-132			
SM18	519-080-100				619-080-100			
SM19	519-072-132				619-072-132			
SM20	519-072-100				619-072-100			
SM21	519-064-132				619-064-132			

*** CONTINUED ***

** CONTINUED **
TABLE F1

SINGLE FABRIC
ODL50 NCT LINKS FROM MCTU OR MCTU2 OR MCTU3 TO CM2

CABLE DESIG	JL101	JL103	JL105	JL107	JL102	JL104	JL106	JL108
NCT	0A		0B		1A		1B	
LINKS	XMTR	REC	XMTR	REC	XMTR	REC	XMTR	REC
SM () SMC 1 MCTU G10 OR G12G	136-084-332 982TR OR 982TRA		136-084-300 982TS OR 982TSA		136-098-332 982TR OR 982TRA		136-098-300 982TS OR 982TSA	
SM () SMC 1 MCTU2 G10A OR G12H	119-156-332 982TR OR 982TRA		119-156-300 982TS OR 982TSA		128-156-332 982TR OR 982TRA		128-156-300 982TS OR 982TSA	
SM () SMC1 MCTU3 G15	( )-084-332 982TRC	( )-084-345	( )-084-313 982TRC	( )-084-300	( )-176-332 982TRC	( )-176-345	( )-176-313 982TRC	( )-176-300

CM2 PORTS

SM NBR	CM2 '0' SIDE 982TT RA	TA	RB	TB	CM2 '1' SIDE 982TT RA	TA	RB	TB
SM22	519-064-100				619-064-100			
SM23	519-056-132				619-056-132			
SM24	519-056-100				619-056-100			
SM25	519-048-132				619-048-132			
SM26	519-048-100				619-048-100			
SM27	519-040-132				619-040-132			
SM28	519-040-100				619-040-100			
SM29	519-032-132				619-032-132			
SM30	519-032-100				619-032-100			
SM31	436-088-132				736-088-132			
SM32	436-088-100				736-088-100			
SM33	436-080-132				736-080-132			
SM34	436-080-100				736-080-100			
SM35	436-072-132				736-072-132			
SM36	436-072-100				736-072-100			
SM37	436-064-132				736-064-132			
SM38	436-064-100				736-064-100			
SM39	436-056-132				736-056-132			
SM40	436-056-100				736-056-100			
SM41	436-048-132				736-048-132			
SM42	436-048-100				736-048-100			
SM43	436-040-132				736-040-132			
SM44	436-040-100				736-040-100			
SM45	436-032-132				736-032-132			

*** CONTINUED ***

COPYRIGHT @ 2001 LUCENT TECHNOLOGIES
ALL RIGHTS RESERVED

BT13

INTERCABINET CABLING
FOR
5ESS * SWITCH
*LUCENT TRADEMARK

** CONTINUED **
TABLE F1

SINGLE FABRIC
ODL50 NCT LINKS FROM MCTU OR MCTU2 OR MCTU3 TO CM2

CABLE DESIG	JL101	JL103	JL105	JL107	JL102	JL104	JL106	JL108
NCT	OA		OB		1A		1B	
LINKS	XMTR	REC	XMTR	REC	XMTR	REC	XMTR	REC
SM () SMC 1 MCTU G10 OR G12G	136-084-332 982TR OR 982TRA		136-084-300 982TS OR 982TSA		136-098-332 982TR OR 982TRA		136-098-300 982TS OR 982TSA	
SM () SMC 1 MCTU2 G10A OR G12H	119-156-332 982TR OR 982TRA		119-156-300 982TS OR 982TSA		128-156-332 982TR OR 982TRA		128-156-300 982TS OR 982TSA	
SM () SMC1 MCTU3 G15	( )- 084- 332 982TRC	( )- 084- 345	( )- 084- 313 982TRC	( )- 084- 300	( )- 176- 332 982TRC	( )- 176- 345	( )- 176- 313 982TRC	( )- 176- 300

CM2 PORTS

SM46	436-032-100	736-032-100
SM47	419-088-132	719-088-132
SM48	419-088-100	719-088-100
SM49	419-080-132	719-080-132
SM50	419-080-100	719-080-100
SM51	419-072-132	719-072-132
SM52	419-072-100	719-072-100
SM53	419-064-132	719-064-132
SM54	419-064-100	719-064-100
SM55	419-056-132	719-056-132
SM56	419-056-100	719-056-100
SM57	419-048-132	719-048-132
SM58	419-048-100	719-048-100
SM59	419-040-132	719-040-132
SM60	419-040-100	719-040-100
SM61	419-032-132	719-032-132
SM62	419-032-100	719-032-100
SM63	336-088-132	836-088-132
SM64	336-088-100	836-088-100
SM65	336-080-132	836-080-132
SM66	336-080-100	836-080-100
SM67	336-072-132	836-072-132
SM68	336-072-100	836-072-100

*** CONTINUED ***

** CONTINUED **
TABLE F1

SINGLE FABRIC
ODL50 NCT LINKS FROM MCTU OR MCTU2 OR MCTU3 TO CM2

CABLE DESIG	JL101	JL103	JL105	JL107	JL102	JL104	JL106	JL108
NCT	OA		OB		1A		1B	
LINKS	XMTR	REC	XMTR	REC	XMTR	REC	XMTR	REC
SM () SMC 1 MCTU G10 OR G12G	136-084-332 982TR OR 982TRA		136-084-300 982TS OR 982TSA		136-098-332 982TR OR 982TRA		136-098-300 982TS OR 982TSA	
SM () SMC 1 MCTU2 G10A OR G12H	119-156-332 982TR OR 982TRA		119-156-300 982TS OR 982TSA		128-156-332 982TR OR 982TRA		128-156-300 982TS OR 982TSA	
SM () SMC1 MCTU3 G15	( )- 084- 332 982TRC	( )- 084- 345	( )- 084- 313 982TRC	( )- 084- 300	( )- 176- 332 982TRC	( )- 176- 345	( )- 176- 313 982TRC	( )- 176- 300

CM2 PORTS

SM69	336-064-132	836-064-132
SM70	336-064-100	836-064-100
SM71	336-056-132	836-056-132
SM72	336-056-100	836-056-100
SM73	336-048-132	836-048-132
SM74	336-048-100	836-048-100
SM75	336-040-132	836-040-132
SM76	336-040-100	836-040-100
SM77	336-032-132	836-032-132
SM78	336-032-100	836-032-100
SM79	319-088-132	819-088-132
SM80	319-088-100	819-088-100
SM81	319-080-132	819-080-132
SM82	319-080-100	819-080-100
SM83	319-072-132	819-072-132
SM84	319-072-100	819-072-100
SM85	319-064-132	819-064-132
SM86	319-064-100	819-064-100
SM87	319-056-132	819-056-145
SM88	319-056-100	819-056-100
SM89	319-048-132	819-048-132
SM90	319-048-100	819-048-100
SM91	319-040-132	819-040-132
SM92	319-040-100	819-040-100

*** CONTINUED ***

** CONTINUED **
TABLE F1

SINGLE FABRIC
ODL50 NCT LINKS FROM MCTU OR MCTU2 OR MCTU3 TO CM2

CABLE DESIG	JL101	JL103	JL105	JL107	JL102	JL104	JL106	JL108
NCT	OA		OB		1A		1B	
LINKS	XMTR	REC	XMTR	REC	XMTR	REC	XMTR	REC
SM () SMC 1 MCTU G10 OR G12G	136-084-332 982TR OR 982TRA		136-084-300 982TS OR 982TSA		136-098-332 982TR OR 982TRA		136-098-300 982TS OR 982TSA	
SM () SMC 1 MCTU2 G10A OR G12H	119-156-332 982TR OR 982TRA		119-156-300 982TS OR 982TSA		128-156-332 982TR OR 982TRA		128-156-300 982TS OR 982TSA	
SM () SMC1 MCTU3 G15	( )- 084- 332 982TRC	( )- 084- 345	( )- 084- 313 982TRC	( )- 084- 300	( )- 176- 332 982TRC	( )- 176- 345	( )- 176- 313 982TRC	( )- 176- 300

CM2 PORTS

SM93	319-032-132	819-032-132
SM94	319-032-100	819-032-100

TABLE F2

DUAL FABRIC (ODD SM)
ODL50 NCT LINKS FROM MCTU OR MCTU2 OR MCTU3 TO CM2

CABLE DESIG	JL101	JL103	JL105	JL107	JL102	JL104	JL106	JL108
NCT	OA		OB		1A		1B	
LINKS	XMTR	REC	XMTR	REC	XMTR	REC	XMTR	REC
SM () SMC 1 MCTU G10 OR G12G	136-084-332 982TR OR 982TRA		136-084-300 982TS OR 982TSA		136-098-332 982TR OR 982TRA		136-098-300 982TS OR 982TSA	
SM () SMC 1 MCTU2 G10A OR G12H	119-156-332 982TR OR 982TRA		119-156-300 982TS OR 982TSA		128-156-332 982TR OR 982TRA		128-156-300 982TS OR 982TSA	
SM( ) SMC1 MCTU3 G15	( )- 084- 332 982TRC	( )- 084- 345	( )- 084- 313 982TRC	( )- 084- 300	( )- 176- 332 982TRC	( )- 176- 345	( )- 176- 313 982TRC	( )- 176- 300

CM2 PORTS

ODD SM NBR	CM2 '0' SIDE 982TT		CM2 '1' SIDE 982TT	
	RA	TA	RA	TA
SM1	536-088-132	519-088-132	636-088-132	619-088-132

*** CONTINUED ***

** CONTINUED **
TABLE F2

DUAL FABRIC (ODD SM)
ODL50 NCT LINKS FROM MCTU OR MCTU2 OR MCTU3 TO CM2

CABLE DESIG	JL101	JL103	JL105	JL107	JL102	JL104	JL106	JL108
NCT	OA		OB		1A		1B	
LINKS	XMTR	REC	XMTR	REC	XMTR	REC	XMTR	REC
SM () SMC 1 MCTU G10 OR G12G	136-084-332 982TR OR 982TRA		136-084-300 982TS OR 982TSA		136-098-332 982TR OR 982TRA		136-098-300 982TS OR 982TSA	
SM () SMC 1 MCTU2 G10A OR G12H	119-156-332 982TR OR 982TRA		119-156-300 982TS OR 982TSA		128-156-332 982TR OR 982TRA		128-156-300 982TS OR 982TSA	
SM( ) SMC1 MCTU3 G15	( )- 084- 332 982TRC	( )- 084- 345	( )- 084- 313 982TRC	( )- 084- 300	( )- 176- 332 982TRC	( )- 176- 345	( )- 176- 313 982TRC	( )- 176- 300

CM2 PORTS

SM3	536-080-132	519-080-132	636-080-132	619-080-132
SM5	536-080-100	519-080-100	636-080-100	619-080-100
SM7	536-072-132	519-072-132	636-072-132	619-072-132
SM9	536-072-100	519-072-100	636-072-100	619-072-100
SM11	536-064-132	519-064-132	636-064-132	619-064-132
SM13	536-064-100	519-064-100	636-064-100	619-064-100
SM15	536-056-132	519-056-132	636-056-132	619-056-132
SM17	536-056-100	519-056-100	636-056-100	619-056-100
SM19	536-048-132	519-048-132	636-048-132	619-048-132
SM21	536-048-100	519-048-100	636-048-100	619-048-100
SM23	536-040-132	519-040-132	636-040-132	619-040-132
SM25	536-040-100	519-040-100	636-040-100	619-040-100
SM27	536-032-132	519-032-132	636-032-132	619-032-132
SM29	536-032-100	519-032-100	636-032-100	619-032-100
SM31	436-088-132	419-088-132	736-088-132	719-088-132
SM33	436-088-100	419-088-100	736-088-100	719-088-100
SM35	436-080-132	419-080-132	736-080-132	719-080-132
SM37	436-080-100	419-080-100	736-080-100	719-080-100
SM39	436-072-132	419-072-132	736-072-132	719-072-132
SM41	436-072-100	419-072-100	736-072-100	719-072-100
SM43	436-064-132	419-064-132	736-064-132	719-064-132
SM45	436-064-100	419-064-100	736-064-100	719-064-100
SM47	436-056-132	419-056-132	736-056-132	719-056-132
SM49	436-056-100	419-056-100	736-056-100	719-056-100

*** CONTINUED ***

COPYRIGHT @ 2001 LUCENT TECHNOLOGIES
ALL RIGHTS RESERVED

BT13

INTERCABINET CABLING
FOR
5ESS * SWITCH
*LUCENT TRADEMARK

DWG SIZE C2 | ISSUE 117

LUCENT TECHNOLOGIES INC | ED5D500-21 | SHEET D73 OF 292

PRINTED IN U.S.A.

** CONTINUED **
TABLE F2

DUAL FABRIC (ODD SM)
ODL50 NCT LINKS FROM MCTU OR MCTU2 OR MCTU3 TO CM2

CABLE DESIG	JL101	JL103	JL105	JL107	JL102	JL104	JL106	JL108
NCT	OA		OB		1A		1B	
LINKS	XMTR	REC	XMTR	REC	XMTR	REC	XMTR	REC
SM () SMC 1 MCTU G10 OR G12G	136-084-332 982TR OR 982TRA		136-084-300 982TS OR 982TSA		136-098-332 982TR OR 982TRA		136-098-300 982TS OR 982TSA	
SM () SMC 1 MCTU2 G10A OR G12H	119-156-332 982TR OR 982TRA		119-156-300 982TS OR 982TSA		128-156-332 982TR OR 982TRA		128-156-300 982TS OR 982TSA	
SM( ) SMC1 MCTU3 G15	( )- 084- 332 982TRC	( )- 084- 345	( )- 084- 313 982TRC	( )- 084- 300	( )- 176- 332 982TRC	( )- 176- 345	( )- 176- 313 982TRC	( )- 176- 300

CM2 PORTS

SM51	436-048-132	419-048-132	736-048-132	719-048-132
SM53	436-048-100	419-048-100	736-048-100	719-048-100
SM55	436-040-132	419-040-132	736-040-132	719-040-132
SM57	436-040-100	419-040-100	736-040-100	719-040-100
SM59	436-032-132	419-032-132	736-032-132	719-032-132
SM61	436-032-100	419-032-100	736-032-100	719-032-100
SM63	336-088-132	319-088-132	836-088-132	819-088-132
SM65	336-088-100	319-088-100	836-088-100	819-088-100
SM67	336-080-132	319-080-132	836-080-132	819-080-132
SM69	336-080-100	319-080-100	836-080-100	819-080-100
SM71	336-072-132	319-072-132	836-072-132	819-072-132
SM73	336-072-100	319-072-100	836-072-100	819-072-100
SM75	336-064-132	319-064-132	836-064-132	819-064-132
SM77	336-064-100	319-064-100	836-064-100	819-064-100
SM79	336-056-132	319-056-132	836-056-132	819-056-132
SM81	336-056-100	319-056-100	836-056-100	819-056-100
SM83	336-048-132	319-048-132	836-048-132	819-048-132
SM85	336-048-100	319-048-100	836-048-100	819-048-100
SM87	336-040-132	319-040-132	836-040-132	819-040-132
SM89	336-040-100	319-040-100	836-040-100	819-040-100
SM91	336-032-132	319-032-132	836-032-132	819-032-132
SM93	336-032-100	319-032-100	836-032-100	819-032-100
SM95	236-088-132	219-088-132	936-088-132	919-088-132

*** CONTINUED ***

** CONTINUED **
TABLE F2

DUAL FABRIC (ODD SM)
ODL50 NCT LINKS FROM MCTU OR MCTU2 OR MCTU3 TO CM2

CABLE DESIG	JL101	JL103	JL105	JL107	JL102	JL104	JL106	JL108
NCT	OA		OB		1A		1B	
LINKS	XMTR	REC	XMTR	REC	XMTR	REC	XMTR	REC
SM () SMC 1 MCTU G10 OR G12G	136-084-332 982TR OR 982TRA		136-084-300 982TS OR 982TSA		136-098-332 982TR OR 982TRA		136-098-300 982TS OR 982TSA	
SM () SMC 1 MCTU2 G10A OR G12H	119-156-332 982TR OR 982TRA		119-156-300 982TS OR 982TSA		128-156-332 982TR OR 982TRA		128-156-300 982TS OR 982TSA	
SM( ) SMC1 MCTU3 G15	( )- 084- 332 982TRC	( )- 084- 345	( )- 084- 313 982TRC	( )- 084- 300	( )- 176- 332 982TRC	( )- 176- 345	( )- 176- 313 982TRC	( )- 176- 300

CM2 PORTS

SM97	236-088-100	219-088-100	936-088-100	919-088-100
SM99	236-080-132	219-080-132	936-080-132	919-080-132
SM101	236-080-100	219-080-100	936-080-100	919-080-100
SM103	236-072-132	219-072-132	936-072-132	919-072-132
SM105	236-072-100	219-072-100	936-072-100	919-072-100
SM107	236-064-132	219-064-132	936-064-132	919-064-132
SM109	236-064-100	219-064-100	936-064-100	919-064-100
SM111	236-056-132	219-056-132	936-056-132	919-056-132
SM113	236-056-100	219-056-100	936-056-100	919-056-100
SM115	236-048-132	219-048-132	936-048-132	919-488-132
SM117	236-048-100	219-048-100	936-048-100	919-048-100
SM119	236-040-132	219-040-132	936-040-132	919-040-132
SM121	236-040-100	219-040-100	936-040-100	919-040-100
SM123	236-032-132	219-032-132	936-032-132	919-032-132
SM125	236-032-100	219-032-100	936-032-100	919-032-100
SM127	136-088-132	119-088-132	1036-088-132	1019-088-132
SM129	136-088-100	119-088-100	1036-088-100	1019-088-100
SM131	136-080-132	119-080-132	1036-080-132	1019-080-132
SM133	136-080-100	119-080-100	1036-080-100	1019-080-100
SM135	136-072-132	119-072-132	1036-072-132	1019-072-132
SM137	136-072-100	119-072-100	1036-072-100	1019-072-100
SM139	136-064-132	119-064-132	1036-064-132	1019-064-132
SM141	136-064-100	119-064-100	1036-064-100	1036-064-100
SM143	136-056-132	119-056-132	1036-056-132	1019-056-132

*** CONTINUED ***

** CONTINUED **
TABLE F2

DUAL FABRIC (ODD SM)
ODL50 NCT LINKS FROM MCTU OR MCTU2 OR MCTU3 TO CM2

CABLE DESIG	JL101	JL103	JL105	JL107	JL102	JL104	JL106	JL108
NCT	OA		OB		1A		1B	
LINKS	XMTR	REC	XMTR	REC	XMTR	REC	XMTR	REC
SM () SMC 1 MCTU G10 OR G12G	136-084-332 982TR OR 982TRA		136-084-300 982TS OR 982TSA		136-098-332 982TR OR 982TRA		136-098-300 982TS OR 982TSA	
SM () SMC 1 MCTU2 G10A OR G12H	119-156-332 982TR OR 982TRA		119-156-300 982TS OR 982TSA		128-156-332 982TR OR 982TRA		128-156-300 982TS OR 982TSA	
SM( ) SMC1 MCTU3 G15	( )- 084- 332 982TRC	( )- 084- 345	( )- 084- 313 982TRC	( )- 084- 300	( )- 176- 332 982TRC	( )- 176- 345	( )- 176- 313 982TRC	( )- 176- 300

CM2 PORTS

SM145	136-056-100	119-056-100	1036-056-100	1019-056-100
SM147	136-048-132	119-048-132	1036-048-132	1019-048-132
SM149	136-048-100	119-048-100	1036-048-100	1019-048-100
SM151	136-040-132	119-040-132	1036-040-132	1019-040-132
SM153	136-040-100	119-040-100	1036-040-100	1019-040-100
SM155	136-032-132	119-032-132	1036-032-132	1019-324-132
SM157	136-032-100	119-032-100	1036-032-100	1019-032-100
SM159	036-088-132	019-088-132	1136-088-132	1119-088-132
SM161	036-088-100	019-088-100	1136-088-100	1119-088-100
SM163	036-080-132	019-080-132	1136-080-132	1119-080-132
SM165	036-080-100	019-080-100	1136-080-100	1119-080-100
SM167	036-072-132	019-072-132	1136-072-132	1119-072-132
SM169	036-072-100	019-072-100	1136-072-100	1119-072-100
SM171	036-064-132	019-064-132	1136-064-132	1119-064-132
SM173	036-064-100	019-064-100	1136-064-100	1119-064-100
SM175	036-056-132	019-056-132	1136-056-132	1119-056-132
SM177	036-056-100	019-056-100	1136-056-100	1119-056-100
SM179	036-048-132	019-048-132	1136-048-132	1119-048-132
SM181	036-048-100	019-048-100	1136-048-100	1119-048-100
SM183	036-040-132	019-040-132	1136-040-132	1119-040-132
SM185	036-040-100	019-040-100	1136-040-100	1119-040-100
SM187	036-032-132	019-032-132	1136-032-132	1119-032-132
SM189	036-032-100	019-032-100	1136-032-100	1119-032-100

TABLE F3

DUAL FABRIC (EVEN SM)
ODL50 NCT LINKS FROM MCTU OR MCTU2 OR MCTU3 TO CM2

CABLE DESIG	JL101	JL103	JL105	JL107	JL102	JL104	JL106	JL108
NCT	OA		OB		1A		1B	
LINKS	XMTR	REC	XMTR	REC	XMTR	REC	XMTR	REC
SM () SMC 1 MCTU G10 OR G12G	136-084-332 982TR OR 982TRA		136-084-300 982TS OR 982TSA		136-098-332 982TR OR 982TRA		136-098-300 982TS OR 982TSA	
SM () SMC 1 MCTU2 G10A OR G12H	119-156-332 982TR OR 982TRA		119-156-300 982TS OR 982TSA		128-156-332 982TR OR 982TRA		128-156-300 982TS OR 982TSA	
SM () SMC1 MCTU3 G15	( )- 084- 332 982TRC	( )- 084- 345	( )- 084- 313 982TRC	( )- 084- 300	( )- 176- 332 982TRC	( )- 176- 345	( )- 176- 313 982TRC	( )- 176- 300

CM2 PORTS

EVEN SM NBR	CM2 '0' SIDE 982TT		CM2 '1' SIDE 982TT	
	RB	TB	RB	TB
SM2	536-088-132	519-088-132	636-088-132	619-088-132
SM4	536-080-132	519-080-132	636-080-132	619-080-132
SM6	536-080-100	519-080-100	636-080-100	619-080-100
SM8	536-072-132	519-072-132	636-072-132	619-072-132
SM10	536-072-100	519-072-100	636-072-100	619-072-100
SM12	536-064-132	519-064-132	636-064-132	619-064-132
SM14	536-064-100	519-064-100	636-064-100	619-064-100
SM16	536-056-132	519-056-132	636-056-132	619-056-132
SM18	536-056-100	519-056-100	636-056-100	619-056-100
SM20	536-048-132	519-048-132	636-048-132	619-048-132
SM22	536-048-100	519-048-100	636-048-100	619-048-100
SM24	536-040-132	519-040-132	636-040-132	619-040-132
SM26	536-040-100	519-040-100	636-040-100	619-040-100
SM28	536-032-132	519-032-132	636-032-132	619-032-132
SM30	536-032-100	519-032-100	636-032-100	619-032-100
SM32	436-088-132	419-088-132	736-088-132	719-088-132
SM34	436-088-100	419-088-100	736-088-100	719-088-100
SM36	436-080-132	419-080-132	736-080-132	719-080-132
SM38	436-080-100	419-080-100	736-080-100	719-080-100
SM40	436-072-132	419-072-132	736-072-132	719-072-132
SM42	436-072-100	419-072-100	736-072-100	719-072-100

*** CONTINUED ***

COPYRIGHT @ 2001 LUCENT TECHNOLOGIES
ALL RIGHTS RESERVED

BT13

INTERCABINET CABLING
FOR
5ESS * SWITCH
*LUCENT TRADEMARK

DWG SIZE C2 | ISSUE 117

PRINTED IN U.S.A.

** CONTINUED **
TABLE F3

DUAL FABRIC (EVEN SM)
ODL50 NCT LINKS FROM MCTU OR MCTU2 OR MCTU3 TO CM2

CABLE DESIG	JL101	JL103	JL105	JL107	JL102	JL104	JL106	JL108
NCT	OA		OB		1A		1B	
LINKS	XMTR	REC	XMTR	REC	XMTR	REC	XMTR	REC
SM () SMC 1 MCTU G10 OR G12G	136-084-332 982TR OR 982TRA		136-084-300 982TS OR 982TSA		136-098-332 982TR OR 982TRA		136-098-300 982TS OR 982TSA	
SM () SMC 1 MCTU2 G10A OR G12H	119-156-332 982TR OR 982TRA		119-156-300 982TS OR 982TSA		128-156-332 982TR OR 982TRA		128-156-300 982TS OR 982TSA	
SM () SMC1 MCTU3 G15	( )- 084- 332 982TRC	( )- 084- 345	( )- 084- 313 982TRC	( )- 084- 300	( )- 176- 332 982TRC	( )- 176- 345	( )- 176- 313 982TRC	( )- 176- 300

CM2 PORTS

SM44	436-064-132	419-064-132	736-064-132	719-064-132
SM46	436-064-100	419-064-100	736-064-100	719-064-100
SM48	436-056-132	419-056-132	736-056-132	719-056-132
SM50	436-056-100	419-056-100	736-056-100	719-056-100
SM52	436-048-132	419-048-132	736-048-132	719-048-132
SM54	436-048-100	419-048-100	736-048-100	719-048-100
SM56	436-040-132	419-040-132	736-040-132	719-040-132
SM58	436-040-100	419-040-100	736-040-100	719-040-100
SM60	436-032-132	419-032-132	736-032-132	719-032-132
SM62	436-032-100	419-032-100	736-032-100	719-032-100
SM64	336-088-132	319-088-132	836-088-132	819-088-132
SM66	336-088-100	319-088-100	836-088-100	819-088-100
SM68	336-080-132	319-080-132	836-080-132	819-080-132
SM70	336-080-100	319-080-100	836-080-100	819-080-100
SM72	336-072-132	319-072-132	836-072-132	819-072-132
SM74	336-072-100	319-072-100	836-072-100	819-072-100
SM76	336-064-132	319-064-132	836-064-132	819-064-132
SM78	336-064-100	319-064-100	836-064-100	819-064-100
SM80	336-056-132	319-056-132	836-056-132	819-056-132
SM82	336-056-100	319-056-100	836-056-100	819-056-100
SM84	336-048-132	319-048-132	836-048-132	819-048-132
SM86	336-048-100	319-048-100	836-048-100	819-048-100
SM88	336-040-132	319-040-132	836-040-132	819-040-132
SM90	336-040-100	319-040-100	836-040-100	819-040-100

*** CONTINUED ***

** CONTINUED **
TABLE F3

DUAL FABRIC (EVEN SM)
ODL50 NCT LINKS FROM MCTU OR MCTU2 OR MCTU3 TO CM2

CABLE DESIG	JL101	JL103	JL105	JL107	JL102	JL104	JL106	JL108
NCT	OA		OB		1A		1B	
LINKS	XMTR	REC	XMTR	REC	XMTR	REC	XMTR	REC
SM () SMC 1 MCTU G10 OR G12G	136-084-332 982TR OR 982TRA		136-084-300 982TS OR 982TSA		136-098-332 982TR OR 982TRA		136-098-300 982TS OR 982TSA	
SM () SMC 1 MCTU2 G10A OR G12H	119-156-332 982TR OR 982TRA		119-156-300 982TS OR 982TSA		128-156-332 982TR OR 982TRA		128-156-300 982TS OR 982TSA	
SM () SMC1 MCTU3 G15	( )- 084- 332 982TRC	( )- 084- 345	( )- 084- 313 982TRC	( )- 084- 300	( )- 176- 332 982TRC	( )- 176- 345	( )- 176- 313 982TRC	( )- 176- 300

CM2 PORTS

SM92	336-032-132	319-032-132	836-032-132	819-032-132
SM94	336-032-100	319-032-100	836-032-100	819-032-100
SM96	236-088-132	219-088-132	936-088-132	919-088-132
SM98	236-088-100	219-088-100	936-088-100	919-088-100
SM100	236-080-132	219-080-132	936-080-132	919-080-132
SM102	236-080-100	219-080-100	936-080-100	919-080-100
SM104	236-072-132	219-072-132	936-072-132	919-072-132
SM106	236-072-100	219-072-100	936-072-100	919-072-100
SM108	236-064-132	219-064-132	936-064-132	919-064-132
SM110	236-064-100	219-064-100	936-064-100	919-064-100
SM112	236-056-132	219-056-132	936-056-132	919-056-132
SM114	236-056-100	219-056-100	936-056-100	919-056-100
SM116	236-048-132	219-048-132	936-048-132	919-048-132
SM118	236-048-100	219-048-100	936-048-100	919-048-100
SM120	236-040-132	219-040-132	936-040-132	919-040-132
SM122	226-040-100	219-040-100	936-040-100	919-040-100
SM124	236-032-132	219-032-132	936-032-132	919-032-132
SM126	236-032-100	219-032-100	936-032-100	919-032-100
SM128	136-088-132	119-088-132	1036-088-132	1019-088-132
SM130	136-088-100	119-088-100	1036-088-100	1019-088-100
SM132	136-080-132	119-080-132	1036-080-132	1019-088-132
SM134	136-080-100	119-080-100	1036-080-100	1019-088-100
SM136	136-072-132	119-072-132	1036-072-132	1019-072-132

*** CONTINUED ***

** CONTINUED **
TABLE F3

DUAL FABRIC (EVEN SM)
ODL50 NCT LINKS FROM MCTU OR MCTU2 OR MCTU3 TO CM2

CABLE DESIG	JL101	JL103	JL105	JL107	JL102	JL104	JL106	JL108
NCT	OA		OB		1A		1B	
LINKS	XMTR	REC	XMTR	REC	XMTR	REC	XMTR	REC
SM () SMC 1 MCTU G10 OR G12G	136-084-332 982TR OR 982TRA		136-084-300 982TS OR 982TSA		136-098-332 982TR OR 982TRA		136-098-300 982TS OR 982TSA	
SM () SMC 1 MCTU2 G10A OR G12H	119-156-332 982TR OR 982TRA		119-156-300 982TS OR 982TSA		128-156-332 982TR OR 982TRA		128-156-300 982TS OR 982TSA	
SM () SMC1 MCTU3 G15	( )- 084- 332 982TRC	( )- 084- 345	( )- 084- 313 982TRC	( )- 084- 300	( )- 176- 332 982TRC	( )- 176- 345	( )- 176- 313 982TRC	( )- 176- 300

CM2 PORTS

SM138	136-072-100	119-072-100	1036-072-100	1019-072-100
SM140	136-064-132	119-064-132	1036-064-132	1019-064-132
SM142	136-064-100	119-064-100	1036-064-100	1019-064-100
SM144	136-056-132	119-056-132	1036-056-132	1019-056-132
SM146	136-056-100	119-056-100	1036-056-100	1019-056-100
SM148	136-048-132	119-048-132	1036-048-132	1019-048-132
SM150	136-048-100	119-048-100	1036-048-100	1019-048-100
SM152	136-040-132	119-040-132	1036-040-132	1019-048-132
SM154	136-040-100	119-040-100	1036-040-100	1019-040-100
SM156	136-032-132	119-032-132	1036-032-132	1019-032-132
SM158	136-032-100	119-032-100	1036-032-100	1019-032-100
SM160	036-088-132	019-088-132	1136-088-132	1119-088-132
SM162	036-088-100	019-088-100	1136-088-100	1119-088-100
SM164	036-080-132	019-080-132	1136-080-132	1119-080-132
SM166	036-080-100	019-080-100	1136-080-100	1119-080-100
SM168	036-072-132	019-072-132	1136-072-132	1119-072-132
SM170	036-072-100	019-072-100	1136-072-100	1119-072-100
SM172	036-064-132	019-064-132	1136-064-132	1119-064-132
SM174	036-064-100	019-064-100	1136-064-100	1119-064-100
SM176	036-056-132	019-056-132	1136-056-132	1119-056-132
SM178	036-056-100	019-056-100	1136-056-100	1119-056-100
SM180	036-048-132	019-048-132	1136-048-132	1119-048-132
SM182	036-048-100	019-048-100	1136-048-100	1119-048-100
SM184	036-040-132	019-040-132	1136-040-132	1119-040-132

*** CONTINUED ***

** CONTINUED **
TABLE F3

DUAL FABRIC (EVEN SM)
ODL50 NCT LINKS FROM MCTU OR MCTU2 OR MCTU3 TO CM2

CABLE DESIG	JL101	JL103	JL105	JL107	JL102	JL104	JL106	JL108
NCT	OA		OB		1A		1B	
LINKS	XMTR	REC	XMTR	REC	XMTR	REC	XMTR	REC
SM () SMC 1 MCTU G10 OR G12G	136-084-332 982TR OR 982TRA		136-084-300 982TS OR 982TSA		136-098-332 982TR OR 982TRA		136-098-300 982TS OR 982TSA	
SM () SMC 1 MCTU2 G10A OR G12H	119-156-332 982TR OR 982TRA		119-156-300 982TS OR 982TSA		128-156-332 982TR OR 982TRA		128-156-300 982TS OR 982TSA	
SM () SMC1 MCTU3 G15	( )- 084- 332 982TRC	( )- 084- 345	( )- 084- 313 982TRC	( )- 084- 300	( )- 176- 332 982TRC	( )- 176- 345	( )- 176- 313 982TRC	( )- 176- 300

CM2 PORTS

SM186	036-040-100	019-040-100	1136-040-100	1119-040-100
SM188	036-032-132	019-032-132	1136-032-132	1119-032-132
SM190	036-032-100	019-032-100	1136-032-100	1119-032-100

TABLE F4

DUAL FABRIC ODL50
NCT LINKS FROM TSIU4 (3NB-1) TO CM2

CABLE DESIG		JL113(EVEN) JL112(ODD)	JL111(EVEN) JL110(ODD)	JL113A(EVEN) JL112A(ODD)	JL111A(EVEN) JL110A(ODD)
NCT	PORT	TX	RX	TX	RX
LINKS		SIDE 0		SIDE 1	
SM () SMC 0 TSIU4 J5D00 3NB-1 G13	2	00051-018-TX	00051-018-RX	00051-106-TX	00051-106-RX
	3	00055-018-TX	00055-018-RX	00055-106-TX	00055-106-RX
	4	00043-026-TX	00043-026-RX	00043-114-TX	00043-114-RX
	5	00047-026-TX	00047-026-RX	00047-114-TX	00047-114-RX
	6	00051-026-TX	00051-026-RX	00051-114-TX	00051-114-RX
	7	00055-026-TX	00055-026-RX	00055-114-TX	00055-114-RX
	8	00043-034-TX	00043-034-RX	00043-122-TX	00043-122-RX
	9	00047-034-TX	00047-034-RX	00047-122-TX	00047-122-RX
	10	00051-034-TX	00051-034-RX	00051-122-TX	00051-122-RX
	11	00055-034-TX	00055-034-RX	00055-122-TX	00055-122-RX
	12	00043-042-TX	00043-042-RX	00043-130-TX	00043-130-RX
	13	00047-042-TX	00047-042-RX	00047-130-TX	00047-130-RX

*** CONTINUED ***

COPYRIGHT @ 2001 LUCENT TECHNOLOGIES
ALL RIGHTS RESERVED

BT13

INTERCABINET CABLING
FOR
5ESS * SWITCH
*LUCENT TRADEMARK

DWG SIZE C2 | ISSUE 117

PRINTED IN U.S.A.

** CONTINUED **
TABLE F4

	14	00051-042-TX	00051-042-RX	00051-130-TX	00051-130-RX
	15	00055-042-TX	00055-042-RX	00055-130-TX	00055-130-RX
	16	00043-050-TX	00043-050-RX	00043-138-TX	00043-138-RX
	17	00047-050-TX	00047-050-RX	00047-138-TX	00047-138-RX
	18	00051-050-TX	00051-050-RX	00051-138-TX	00051-138-RX
	19	00055-050-TX	00055-050-RX	00055-138-TX	00055-138-RX
	20	00043-060-TX	00043-060-RX	00043-148-TX	00043-148-RX
	21	00047-060-TX	00047-060-RX	00047-148-TX	00047-148-RX
	22	00051-060-TX	00051-060-RX	00051-148-TX	00051-148-RX
	23	00055-060-TX	00055-060-RX	00055-148-TX	00055-148-RX
	24	00043-068-TX	00043-068-RX	00043-156-TX	00043-156-RX
	25	00047-068-TX	00047-068-RX	00047-156-TX	00047-156-RX
	26	00051-068-TX	00051-068-RX	00051-156-TX	00051-156-RX
	27	00055-068-TX	00055-068-RX	00055-156-TX	00055-156-RX
	28	00043-076-TX	00043-076-RX	00043-164-TX	00043-164-RX
	29	00047-076-TX	00047-076-RX	00047-164-TX	00047-164-RX
	30	00051-076-TX	00051-076-RX	00051-164-TX	00051-164-RX
	31	00055-076-TX	00055-076-RX	00055-164-TX	00055-164-RX
	32	00043-084-TX	00043-084-RX	00043-172-TX	00043-172-RX
	33	00047-084-TX	00047-084-RX	00047-172-TX	00047-172-RX
	34	00051-084-TX	00051-084-RX	00051-172-TX	00051-172-RX
	35	00055-084-TX	00055-084-RX	00055-172-TX	00055-172-RX
	36	00043-092-TX	00043-092-RX	00043-180-TX	00043-180-RX
	37	00047-092-TX	00047-092-RX	00047-180-TX	00047-180-RX
	38	00051-092-TX	00051-092-RX	00051-180-TX	00051-180-RX
	39	00055-092-TX	00055-092-RX	00055-180-TX	00055-180-RX

CM2 PORTS

SM NBR ( )	CM2 '0' SIDE BKF1				CM2 '1' SIDE BKF1			
	RA/RB	TA/TB	RA/RB	TA/TB	RA/RB	TA/TB	RA/RB	TA/TB
	EVEN PORTS		ODD PORTS		EVEN PORTS		ODD PORTS	
SM( )	536-080-100		519-080-100		636-080-100		619-080-100	
SM( )	536-072-100		519-072-100		636-072-100		619-072-100	
SM( )	536-064-100		519-064-100		636-064-100		619-064-100	
SM( )	536-056-100		519-056-100		636-056-100		619-056-100	
SM( )	536-048-100		519-048-100		636-048-100		619-048-100	
SM( )	536-040-100		519-040-100		636-040-100		619-040-100	
SM( )	536-032-100		519-032-100		636-032-100		619-032-100	
SM( )	436-088-100		419-088-100		736-088-100		719-088-100	
SM( )	436-080-100		419-080-100		736-080-100		719-080-100	

*** CONTINUED ***

** CONTINUED **
TABLE F4

SM( )			
SM( )	436-072-100	419-072-100	736-072-100	719-072-100
SM( )	436-064-100	419-064-100	736-064-100	719-064-100
SM( )	436-056-100	419-056-100	736-056-100	719-056-100
SM( )	436-048-100	419-048-100	736-048-100	719-048-100
SM( )	436-040-100	419-040-100	736-040-100	719-040-100
SM( )	436-032-100	419-032-100	736-032-100	719-032-100
SM( )	336-088-100	319-088-100	836-088-100	819-088-100
SM( )	336-080-100	319-080-100	836-080-100	819-080-100
SM( )	336-072-100	319-072-100	836-072-100	819-072-100
SM( )	336-064-100	319-064-100	836-064-100	819-064-100
SM( )	336-056-100	319-056-100	836-056-100	819-056-100
SM( )	336-048-100	319-048-100	836-048-100	819-048-100
SM( )	336-040-100	319-040-100	836-040-100	819-040-100
SM( )	336-032-100	319-032-100	836-032-100	819-032-100
SM( )	236-088-100	219-088-100	936-088-100	919-088-100
SM( )	236-080-100	219-080-100	936-080-100	919-080-100
SM( )	236-072-100	219-072-100	936-072-100	919-072-100
SM( )	236-064-100	219-064-100	936-064-100	919-064-100
SM( )	236-056-100	219-056-100	936-056-100	919-056-100
SM( )	236-048-100	219-048-100	936-048-100	919-048-100
SM( )	236-040-100	219-040-100	936-040-100	919-040-100
SM( )	236-032-100	219-032-100	936-032-100	919-032-100
SM( )	136-088-100	119-088-100	1036-088-100	1019-088-100
SM( )	136-080-100	119-080-100	1036-080-100	1019-088-100
SM( )	136-072-100	119-072-100	1036-072-100	1019-072-100
SM( )	136-064-100	119-064-100	1036-064-100	1019-064-100
SM( )	136-056-100	119-056-100	1036-056-100	1019-056-100
SM( )	136-048-100	119-048-100	1036-048-100	1019-048-100
SM( )	136-040-100	119-040-100	1036-040-100	1019-048-100
SM( )	136-032-100	119-032-100	1036-032-100	1019-032-100
SM( )	036-088-100	019-088-100	1136-088-100	1119-088-100
SM( )	036-080-100	019-080-100	1136-080-100	1119-080-100
SM( )	036-072-100	019-072-100	1136-072-100	1119-072-100
SM( )	036-064-100	019-064-100	1136-064-100	1119-064-100
SM( )	036-056-100	019-056-100	1136-056-100	1119-056-100
SM( )	036-048-100	019-048-100	1136-048-100	1119-048-100
SM( )	036-040-100	019-040-100	1136-040-100	1119-040-100
SM( )	036-032-100	019-032-100	1136-032-100	1119-032-100

TABLE F5

SINGLE FABRIC ODL50
NCT LINKS FROM TSIU4 (3NB-1) TO CM2

CABLE DESIG		JL113/JL112	JL111/JL110	JL113A/ JL112A	JL111A/ JL110A
NCT	PORT	TX	RX	TX	RX
LINKS		SIDE 0		SIDE 1	
SM ( ) SMC 0 TSIU4	2	00051-018-TX	00051-018-RX	00051-106-TX	00051-106-RX
	3	00055-018-TX	00055-018-RX	00055-106-TX	00055-106-RX
J5D00 3NB-1 G13	4	00043-026-TX	00043-026-RX	00043-114-TX	00043-114-RX
	5	00047-026-TX	00047-026-RX	00047-114-TX	00047-114-RX
	6	00051-026-TX	00051-026-RX	00051-114-TX	00051-114-RX
	7	00055-026-TX	00055-026-RX	00055-114-TX	00055-114-RX
	8	00043-034-TX	00043-034-RX	00043-122-TX	00043-122-RX
	9	00047-034-TX	00047-034-RX	00047-122-TX	00047-122-RX
	10	00051-034-TX	00051-034-RX	00051-122-TX	00051-122-RX
	11	00055-034-TX	00055-034-RX	00055-122-TX	00055-122-RX
	12	00043-042-TX	00043-042-RX	00043-130-TX	00043-130-RX
	13	00047-042-TX	00047-042-RX	00047-130-TX	00047-130-RX
	14	00051-042-TX	00051-042-RX	00051-130-TX	00051-130-RX
	15	00055-042-TX	00055-042-RX	00055-130-TX	00055-130-RX
	16	00043-050-TX	00043-050-RX	00043-138-TX	00043-138-RX
	17	00047-050-TX	00047-050-RX	00047-138-TX	00047-138-RX
	18	00051-050-TX	00051-050-RX	00051-138-TX	00051-138-RX
	19	00055-050-TX	00055-050-RX	00055-138-TX	00055-138-RX
	20	00043-060-TX	00043-060-RX	00043-148-TX	00043-148-RX
	21	00047-060-TX	00047-060-RX	00047-148-TX	00047-148-RX
	22	00051-060-TX	00051-060-RX	00051-148-TX	00051-148-RX
	23	00055-060-TX	00055-060-RX	00055-148-TX	00055-148-RX
	24	00043-068-TX	00043-068-RX	00043-156-TX	00043-156-RX
	25	00047-068-TX	00047-068-RX	00047-156-TX	00047-156-RX
	26	00051-068-TX	00051-068-RX	00051-156-TX	00051-156-RX
	27	00055-068-TX	00055-068-RX	00055-156-TX	00055-156-RX
	28	00043-076-TX	00043-076-RX	00043-164-TX	00043-164-RX
	29	00047-076-TX	00047-076-RX	00047-164-TX	00047-164-RX
	30	00051-076-TX	00051-076-RX	00051-164-TX	00051-164-RX
	31	00055-076-TX	00055-076-RX	00055-164-TX	00055-164-RX
	32	00043-084-TX	00043-084-RX	00043-172-TX	00043-172-RX
	33	00047-084-TX	00047-084-RX	00047-172-TX	00047-172-RX
	34	00051-084-TX	00051-084-RX	00051-172-TX	00051-172-RX
	35	00055-084-TX	00055-084-RX	00055-172-TX	00055-172-RX

*** CONTINUED ***

COPYRIGHT @ 2001 LUCENT TECHNOLOGIES
ALL RIGHTS RESERVED

BT13

INTERCABINET CABLING
FOR
5ESS * SWITCH
*LUCENT TRADEMARK

DWG SIZE C2 | ISSUE 117

PRINTED IN U.S.A.

** CONTINUED **
TABLE F5

	36	00043-092-TX	00043-092-RX	00043-180-TX	00043-180-RX
	37	00047-092-TX	00047-092-RX	00047-180-TX	00047-180-RX
	38	00051-092-TX	00051-092-RX	00051-180-TX	00051-180-RX
	39	00055-092-TX	00055-092-RX	00055-180-TX	00055-180-RX

CM2 PORTS

SM NBR ( )	CM2 '0' SIDE BKF1 EVEN PORTS RA	TA	CM2 '0' SIDE BKF1 ODD PORTS RB	TB	CM2 '1' SIDE BKF1 EVEN PORTS RA	TA	CM2 '1' SIDE BKF1 ODD PORTS RB	TB
SM( )	536-080-100		636-080-100					
SM( )	536-072-100		636-072-100					
SM( )	536-064-100		636-064-100					
SM( )	536-056-100		636-056-100					
SM( )	536-048-100		636-048-100					
SM( )	536-040-100		636-040-100					
SM( )	536-032-100		636-032-100					
SM( )	519-080-100		619-080-100					
SM( )	519-072-100		619-072-100					
SM( )	519-064-100		619-064-100					
SM( )	519-056-100		619-056-100					
SM( )	519-048-100		619-048-100					
SM( )	519-040-100		619-040-100					
SM( )	519-032-100		619-032-100					
SM( )	436-088-100		736-088-100					
SM( )	436-080-100		736-080-100					
SM( )	436-072-100		736-072-100					
SM( )	436-064-100		736-064-100					
SM( )	436-056-100		736-056-100					
SM( )	436-048-100		736-048-100					
SM( )	436-040-100		736-040-100					
SM( )	436-032-100		736-032-100					
SM( )	419-088-100		719-088-100					
SM( )	419-080-100		719-080-100					
SM( )	419-072-100		719-072-100					
SM( )	419-064-100		719-064-100					
SM( )	419-056-100		719-056-100					
SM( )	419-048-100		719-048-100					
SM( )	419-040-100		719-040-100					
SM( )	419-032-100		719-032-100					
SM( )	336-088-100		836-088-100					

*** CONTINUED ***

** CONTINUED **
TABLE F5

SM( )	336-080-100	836-080-100
SM( )	336-072-100	836-072-100
SM( )	336-064-100	836-064-100
SM( )	336-056-100	836-056-100
SM( )	336-048-100	836-048-100
SM( )	336-040-100	836-040-100
SM( )	336-032-100	836-032-100
SM( )	319-088-100	819-088-100
SM( )	319-080-100	819-080-100
SM( )	319-072-100	819-072-100
SM( )	319-064-100	819-064-100
SM( )	319-056-100	819-056-100
SM( )	319-048-100	819-048-100
SM( )	319-040-100	819-040-100
SM( )	319-032-100	819-032-100

TABLE H1

SINGLE FABRIC
ORM (HOST OFFICE ONLY)
ODL50 NCT LINKS FROM TRCU-1 TO CM2

DESIG	JL101	JL103	JL105	JL107	JL102	JL104	JL106	JL108
NCT	0A		0B		1A		1B	
LINKS	XMTR	REC	XMTR	REC	XMTR	REC	XMTR	REC
TRCU1 CKT 1 G8E OR G12F	( )-066-132 982TR OR 982TRA		( )-082-132 982TR OR 982TRA		( )-114-132 982TR OR 982TRA		( )-130-132 982TR OR 982TRA	
TRCU1 CKT 2 G8E OR G12F	( )-026-132 982TR OR 982TRA		( )-042-132 982TR OR 98TRA		( )-154-132 982TR OR 982TRA		( )-170-132 982TR OR 982TRA	

CM2 PORTS

SM NBR	CM2 '0' SIDE 982TT RA	TA	RB	TB	CM2 '1' SIDE 982TT RA	TA	RB	TB
SM1	536-088-132				636-088-132			
SM2	536-080-132				636-080-132			
SM3	536-080-100				636-080-100			
SM4	536-072-132				636-072-132			
SM5	536-072-100				636-072-100			
SM6	536-064-132				636-064-132			
SM7	536-064-100				636-064-100			
SM8	536-056-132				636-056-132			

*** CONTINUED ***

** CONTINUED **
TABLE H1

SINGLE FABRIC
ORM (HOST OFFICE ONLY)
ODL50 NCT LINKS FROM TRCU-1 TO CM2

DESIG	JL101	JL103	JL105	JL107	JL102	JL104	JL106	JL108
NCT	0A		0B		1A		1B	
LINKS	XMTR	REC	XMTR	REC	XMTR	REC	XMTR	REC
TRCU1 CKT 1 G8E OR G12F	( )-066-132 982TR OR 982TRA		( )-082-132 982TR OR 982TRA		( )-114-132 982TR OR 982TRA		( )-130-132 982TR OR 982TRA	
TRCU1 CKT 2 G8E OR G12F	( )-026-132 982TR OR 982TRA		( )-042-132 982TR OR 98TRA		( )-154-132 982TR OR 982TRA		( )-170-132 982TR OR 982TRA	

CM2 PORTS

SM NBR	CM2 '0' SIDE 982TT RA	TA	RB	TB	CM2 '1' SIDE 982TT RA	TA	RB	TB
SM9	536-056-100				636-056-100			
SM10	536-048-132				636-048-132			
SM11	536-048-100				636-048-100			
SM12	536-040-132				636-040-132			
SM13	536-040-100				636-040-100			
SM14	536-032-132				636-032-132			
SM15	536-032-100				636-032-100			
SM16	519-088-132				619-088-132			
SM17	519-080-132				619-080-132			
SM18	519-080-100				619-080-100			
SM19	519-072-132				619-072-132			
SM20	519-072-100				619-072-100			
SM21	519-064-132				619-064-132			
SM22	519-064-100				619-064-100			
SM23	519-056-132				619-056-132			
SM24	519-056-100				619-056-100			
SM25	519-048-132				619-048-132			
SM26	519-048-100				619-048-100			
SM27	519-040-132				619-040-132			
SM28	519-040-100				619-040-100			
SM29	519-032-132				619-032-132			
SM30	519-032-100				619-032-100			
SM31	436-088-132				736-088-132			
SM32	436-088-100				736-088-100			

*** CONTINUED ***

** CONTINUED **
TABLE H1

SINGLE FABRIC
ORM (HOST OFFICE ONLY)
ODL50 NCT LINKS FROM TRCU-1 TO CM2

DESIG	JL101	JL103	JL105	JL107	JL102	JL104	JL106	JL108
NCT	0A		0B		1A		1B	
LINKS	XMTR	REC	XMTR	REC	XMTR	REC	XMTR	REC
TRCU1 CKT 1 G8E OR G12F	( )-066-132 982TR OR 982TRA		( )-082-132 982TR OR 982TRA		( )-114-132 982TR OR 982TRA		( )-130-132 982TR OR 982TRA	
TRCU1 CKT 2 G8E OR G12F	( )-026-132 982TR OR 982TRA		( )-042-132 982TR OR 98TRA		( )-154-132 982TR OR 982TRA		( )-170-132 982TR OR 982TRA	

CM2 PORTS

SM NBR	CM2 '0' SIDE 982TT RA	TA	RB	TB	CM2 '1' SIDE 982TT RA	TA	RB	TB
SM33	436-080-132				736-080-132			
SM34	436-080-100				736-080-100			
SM35	436-072-132				736-072-132			
SM36	436-072-100				736-072-100			
SM37	436-064-132				736-064-132			
SM38	436-064-100				736-064-100			
SM39	436-056-132				736-056-132			
SM40	436-056-100				736-056-100			
SM41	436-048-132				736-048-132			
SM42	436-048-100				736-048-100			
SM43	436-040-132				736-040-132			
SM44	436-040-100				736-040-100			
SM45	436-032-132				736-032-132			
SM46	436-032-100				736-032-100			
SM47	419-088-132				719-088-132			
SM48	419-088-100				719-088-100			
SM49	419-080-132				719-080-132			
SM50	419-080-100				719-080-100			
SM51	419-072-132				719-072-132			
SM52	419-072-100				719-072-100			
SM53	419-064-132				719-064-132			
SM54	419-064-100				719-064-100			
SM55	419-056-132				719-056-132			
SM56	419-056-100				719-056-100			
SM57	419-048-132				719-048-132			

*** CONTINUED ***

COPYRIGHT @ 2001 LUCENT TECHNOLOGIES
ALL RIGHTS RESERVED

BT13

INTERCABINET CABLING
FOR
5ESS * SWITCH
*LUCENT TRADEMARK

DWG SIZE C2 | ISSUE 117

** CONTINUED **
TABLE H1

SINGLE FABRIC
ORM (HOST OFFICE ONLY)
ODL50 NCT LINKS FROM TRCU-1 TO CM2

DESIG	JL101	JL103	JL105	JL107	JL102	JL104	JL106	JL108
NCT	0A		0B		1A		1B	
LINKS	XMTR	REC	XMTR	REC	XMTR	REC	XMTR	REC
TRCU1 CKT 1 G8E OR G12F	( )-066-132 982TR OR 982TRA		( )-082-132 982TR OR 982TRA		( )-114-132 982TR OR 982TRA		( )-130-132 982TR OR 982TRA	
TRCU1 CKT 2 G8E OR G12F	( )-026-132 982TR OR 982TRA		( )-042-132 982TR OR 98TRA		( )-154-132 982TR OR 982TRA		( )-170-132 982TR OR 982TRA	

CM2 PORTS

SM NBR	CM2 '0' SIDE 982TT				CM2 '1' SIDE 982TT			
	RA	TA	RB	TB	RA	TA	RB	TB
SM58	419-048-100				719-048-100			
SM59	419-040-132				719-040-132			
SM60	419-040-100				719-040-100			
SM61	419-032-132				719-032-132			
SM62	419-032-100				719-032-100			
SM63	336-088-132				836-088-132			
SM64	336-088-100				836-088-100			
SM65	336-080-132				836-080-132			
SM66	336-080-100				836-080-100			
SM67	336-072-132				836-072-132			
SM68	336-072-100				836-072-100			
SM69	336-064-132				836-064-132			
SM70	336-064-100				836-064-100			
SM71	336-056-132				836-056-132			
SM72	336-056-100				836-056-100			
SM73	336-048-132				836-048-132			
SM74	336-048-100				836-048-100			
SM75	336-040-132				836-040-132			
SM76	336-040-100				836-040-100			
SM77	336-032-132				836-032-132			
SM78	336-032-100				836-032-100			
SM79	319-088-132				819-088-132			
SM80	319-088-100				819-088-100			
SM81	319-080-132				819-080-132			

*** CONTINUED ***

** CONTINUED **
TABLE H1

SINGLE FABRIC
ORM (HOST OFFICE ONLY)
ODL50 NCT LINKS FROM TRCU-1 TO CM2

DESIG	JL101	JL103	JL105	JL107	JL102	JL104	JL106	JL108
NCT	0A		0B		1A		1B	
LINKS	XMTR	REC	XMTR	REC	XMTR	REC	XMTR	REC
TRCU1 CKT 1 G8E OR G12F	( )-066-132 982TR OR 982TRA		( )-082-132 982TR OR 982TRA		( )-114-132 982TR OR 982TRA		( )-130-132 982TR OR 982TRA	
TRCU1 CKT 2 G8E OR G12F	( )-026-132 982TR OR 982TRA		( )-042-132 982TR OR 98TRA		( )-154-132 982TR OR 982TRA		( )-170-132 982TR OR 982TRA	

CM2 PORTS

SM NBR	CM2 '0' SIDE 982TT				CM2 '1' SIDE 982TT			
	RA	TA	RB	TB	RA	TA	RB	TB
SM82	319-080-100				819-080-100			
SM83	319-072-132				819-072-132			
SM84	319-072-100				819-072-100			
SM85	319-064-132				819-064-132			
SM86	319-064-100				819-064-100			
SM87	319-056-132				819-056-132			
SM88	319-056-100				819-056-100			
SM89	319-048-132				819-048-132			
SM90	319-048-100				819-048-100			
SM91	319-040-132				819-040-132			
SM92	319-040-100				819-040-100			
SM93	319-032-132				819-032-132			
SM94	319-032-100				819-032-100			

TABLE H2

DUAL FABRIC (ODD SM,TRCU 1ST OR 2ND CKT
ORM (HOST OFFICE ONLY)
ODL50 NCT LINKS FROM TRCU1 TO CM2

DESIG	JL101	JL103	JL105	JL107	JL102	JL104	JL106	JL108
NCT	0A		0B		1A		1B	
LINKS	XMTR	REC	XMTR	REC	XMTR	REC	XMTR	REC
TRCU1 CKT 1 G8E OR G12F	( )-066-132 982TR OR 982TRA		( )-082-132 982TR OR 982TRA		( )-114-132 982TR OR 982TRA		( )-130-132 982TR OR 982TRA	
TRCU1 CKT 2 G8E OR G12F	( )-026-132 982TR OR 982TRA		( )-042-132 982TR OR 982TRA		( )-154-132 982TR OR 982TRA		( )-170-132 982TR OR 982TRA	

CM2 PORTS

ODD SM NBR	CM2 '0' SIDE 982TT				CM2 '1' SIDE 982TT			
	RA	TA	RB	TB	RA	TA	RB	TB
SM1	536-088-132		519-088-132		636-088-132		619-088-132	
SM3	536-080-132		519-080-132		636-080-132		619-080-132	
SM5	536-080-100		519-080-100		636-080-100		619-080-100	
SM7	536-072-132		519-072-132		636-072-132		619-072-132	
SM9	536-072-100		519-072-100		636-072-100		619-072-100	
SM11	536-064-132		519-064-132		636-064-132		619-064-132	
SM13	536-064-100		519-064-100		636-064-100		619-064-100	
SM15	536-056-132		519-056-132		636-056-132		619-056-132	
SM17	536-056-100		519-056-100		636-056-100		619-056-100	
SM19	536-048-132		519-048-132		636-048-132		619-048-132	
SM21	536-048-100		519-048-100		636-048-100		619-048-100	
SM23	536-040-132		519-040-132		636-040-132		619-040-132	
SM25	536-040-100		519-040-100		636-040-100		619-040-100	
SM27	536-032-132		519-032-132		636-032-132		619-032-132	
SM29	536-032-100		519-032-100		636-032-100		619-032-100	
SM31	436-088-132		419-088-132		736-088-132		719-088-132	
SM33	436-088-100		419-088-100		736-088-100		719-088-100	
SM35	436-080-132		419-080-132		736-080-132		719-080-132	
SM37	436-080-100		419-080-100		736-080-100		719-080-100	
SM39	436-072-132		419-072-132		736-072-132		719-072-132	
SM41	436-072-100		419-072-100		736-072-100		719-072-100	
SM43	436-064-132		419-064-132		736-064-132		719-064-132	
SM45	436-064-100		419-064-100		736-064-100		719-064-100	
SM47	436-056-132		419-056-132		736-056-132		719-056-132	
SM49	436-056-100		419-056-100		736-056-100		719-056-100	

*** CONTINUED ***

** CONTINUED **
TABLE H2

DUAL FABRIC (ODD SM,TRCU 1ST OR 2ND CKT
ORM (HOST OFFICE ONLY)
ODL50 NCT LINKS FROM TRCU1 TO CM2

DESIG	JL101	JL103	JL105	JL107	JL102	JL104	JL106	JL108
NCT	0A		0B		1A		1B	
LINKS	XMTR	REC	XMTR	REC	XMTR	REC	XMTR	REC
TRCU1 CKT 1 G8E OR G12F	( )-066-132 982TR OR 982TRA		( )-082-132 982TR OR 982TRA		( )-114-132 982TR OR 982TRA		( )-130-132 982TR OR 982TRA	
TRCU1 CKT 2 G8E OR G12F	( )-026-132 982TR OR 982TRA		( )-042-132 982TR OR 982TRA		( )-154-132 982TR OR 982TRA		( )-170-132 982TR OR 982TRA	

CM2 PORTS

ODD SM NBR	CM2 '0' SIDE 982TT				CM2 '1' SIDE 982TT			
	RA	TA	RB	TB	RA	TA	RB	TB
SM51	436-048-132		419-048-132		736-048-132		719-048-132	
SM53	436-048-100		419-048-100		736-048-100		719-048-100	
SM55	436-040-132		419-040-132		736-040-132		719-040-132	
SM57	436-040-100		419-040-100		736-040-100		719-040-100	
SM59	436-032-132		419-032-132		736-032-132		719-032-132	
SM61	436-032-100		419-032-100		736-032-100		719-032-100	
SM63	336-088-132		319-088-132		836-088-132		819-088-132	
SM65	336-088-100		319-088-100		836-088-100		819-088-100	
SM67	336-080-132		319-080-132		836-080-132		819-080-132	
SM69	336-080-100		319-080-100		836-080-100		819-080-100	
SM71	336-072-132		319-072-132		836-072-132		819-072-132	
SM73	336-072-100		319-072-100		836-072-100		819-072-100	
SM75	336-064-132		319-064-132		836-064-132		819-064-132	
SM77	336-064-100		319-064-100		836-064-100		819-064-100	
SM79	336-056-132		319-056-132		836-056-132		819-056-132	
SM81	336-056-100		319-056-100		836-056-100		819-056-100	
SM83	336-048-132		319-048-132		836-048-132		819-048-132	
SM85	336-048-100		319-048-100		836-048-100		819-048-100	
SM87	336-040-132		319-040-132		836-040-132		819-040-132	
SM89	336-040-100		319-040-100		836-040-100		819-040-100	
SM91	336-032-132		319-032-132		836-032-132		819-032-132	
SM93	336-032-100		319-032-100		836-032-100		819-032-100	
SM95	236-088-132		219-088-132		936-088-132		919-088-132	
SM97	236-088-100		219-088-100		936-088-100		919-088-100	

*** CONTINUED ***

COPYRIGHT @ 2001 LUCENT TECHNOLOGIES
ALL RIGHTS RESERVED

BT13

INTERCABINET CABLING
FOR
5ESS * SWITCH
*LUCENT TRADEMARK

DWG SIZE C2 | ISSUE 117

** CONTINUED **
TABLE H2

DUAL FABRIC (ODD SM,TRCU 1ST OR 2ND CKT
ORM (HOST OFFICE ONLY)
ODL50 NCT LINKS FROM TRCU1 TO CM2

DESIG	JL101	JL103	JL105	JL107	JL102	JL104	JL106	JL108
NCT	OA		OB		1A		1B	
LINKS	XMTR	REC	XMTR	REC	XMTR	REC	XMTR	REC
TRCU1 CKT 1 G8E OR G12F	( )-066-132 982TR OR 982TRA		( )-082-132 982TR OR 982TRA		( )-114-132 982TR OR 982TRA		( )-130-132 982TR OR 982TRA	
TRCU1 CKT 2 G8E OR G12F	( )-026-132 982TR OR 982TRA		( )-042-132 982TR OR 982TRA		( )-154-132 982TR OR 982TRA		( )-170-132 982TR OR 982TRA	

CM2 PORTS

ODD SM NBR	CM2 '0' SIDE 982TT				CM2 '1' SIDE 982TT			
	RA	TA	RB	TB	RA	TA	RB	TB
SM99	236-080-132		219-080-132		936-080-132		919-080-132	
SM101	236-080-100		219-080-100		936-080-100		919-080-100	
SM103	236-072-132		219-072-132		936-072-132		919-072-132	
SM105	236-072-100		219-072-100		936-072-100		919-072-100	
SM107	236-064-132		219-064-132		936-064-132		919-064-132	
SM109	236-064-100		219-064-100		936-064-100		919-064-100	
SM111	236-056-132		219-056-132		936-056-132		919-056-132	
SM113	236-056-100		219-056-100		936-056-100		919-056-100	
SM115	236-048-132		219-048-132		936-048-132		919-488-132	
SM117	236-048-100		219-048-100		936-048-100		919-048-100	
SM119	236-040-132		219-040-132		936-040-132		919-040-132	
SM121	236-040-100		219-040-100		936-040-100		919-040-100	
SM123	236-032-132		219-032-132		936-032-132		919-032-132	
SM125	236-032-100		219-032-100		936-032-100		919-032-100	
SM127	136-088-132		119-088-132		1036-088-132		1019-088-132	
SM129	136-088-100		119-088-100		1036-088-100		1019-088-100	
SM131	136-080-132		119-080-132		1036-080-132		1019-080-132	
SM133	136-080-100		119-080-100		1036-080-100		1019-080-100	
SM135	136-072-132		119-072-132		1036-072-132		1019-072-132	
SM137	136-072-100		119-072-100		1036-072-100		1019-072-100	
SM139	136-064-132		119-064-132		1036-064-132		1019-064-132	
SM141	136-064-100		119-064-100		1036-064-100		1019-064-100	
SM143	136-056-132		119-056-132		1036-056-132		1019-056-132	
SM145	136-056-100		119-056-100		1036-056-100		1019-056-100	
SM147	136-048-132		119-048-132		1036-048-132		1019-048-132	

*** CONTINUED ***

** CONTINUED **
TABLE H2

DUAL FABRIC (ODD SM,TRCU 1ST OR 2ND CKT
ORM (HOST OFFICE ONLY)
ODL50 NCT LINKS FROM TRCU1 TO CM2

DESIG	JL101	JL103	JL105	JL107	JL102	JL104	JL106	JL108
NCT	OA		OB		1A		1B	
LINKS	XMTR	REC	XMTR	REC	XMTR	REC	XMTR	REC
TRCU1 CKT 1 G8E OR G12F	( )-066-132 982TR OR 982TRA		( )-082-132 982TR OR 982TRA		( )-114-132 982TR OR 982TRA		( )-130-132 982TR OR 982TRA	
TRCU1 CKT 2 G8E OR G12F	( )-026-132 982TR OR 982TRA		( )-042-132 982TR OR 982TRA		( )-154-132 982TR OR 982TRA		( )-170-132 982TR OR 982TRA	

CM2 PORTS

ODD SM NBR	CM2 '0' SIDE 982TT				CM2 '1' SIDE 982TT			
	RA	TA	RB	TB	RA	TA	RB	TB
SM149	136-048-100		119-048-100		1036-048-100		1019-048-100	
SM151	136-040-132		119-040-132		1036-040-132		1019-040-132	
SM153	136-040-100		119-040-100		1036-040-100		1019-040-100	
SM155	136-032-132		119-032-132		1036-032-132		1019-032-132	
SM157	136-032-100		119-032-100		1036-032-100		1019-032-100	
SM159	036-088-132		019-088-132		1136-088-132		1119-088-132	
SM161	036-088-100		019-088-100		1136-088-100		1119-088-100	
SM163	036-080-132		019-080-132		1136-088-132		1119-080-132	
SM165	036-080-100		019-080-100		1136-080-100		1119-080-100	
SM167	036-072-132		019-072-132		1136-072-132		1119-072-132	
SM169	036-072-100		019-072-100		1136-072-100		1119-072-100	
SM171	036-064-132		019-064-132		1136-064-132		1119-064-132	
SM173	036-064-100		019-064-100		1136-064-100		1119-064-100	
SM175	036-056-132		019-056-132		1136-056-132		1119-056-132	
SM177	036-056-100		019-056-100		1136-056-100		1119-056-100	
SM179	036-048-132		019-048-132		1136-048-132		1119-048-132	
SM181	036-048-100		019-048-100		1136-048-100		1119-048-100	
SM183	036-040-132		019-040-132		1136-040-132		1119-040-132	
SM185	036-040-100		019-040-100		1136-040-100		1119-040-100	
SM187	036-032-132		019-032-132		1136-032-132		1119-032-132	
SM189	036-032-100		019-032-100		1136-032-100		1119-032-100	

TABLE H3

DUAL FABRIC (EVEN SM,TRCU 1ST OR 2ND CKT)
ORM (HOST OFFICE ONLY)
ODL50 NCT LINKS FROM TRCU1 TO CM2

DESIG	JL101	JL103	JL105	JL107	JL102	JL104	JL106	JL108
NCT	OA		OB		1A		1B	
LINKS	XMTR	REC	XMTR	REC	XMTR	REC	XMTR	REC
TRCU1 CKT 1 G8E OR G12F	( )-066-132 982TR OR 982TRA		( )-082-132 982TR OR 982TRA		( )-114-132 982TR OR 982TRA		( )-130-132 982TR OR 982TRA	
TRCU1 CKT 2 G8E OR G12F	( )-026-132 982TR OR 982TRA		( )-042-132 982TR OR 982TRA		( )-154-132 982TR OR 982TRA		( )-170-132 982TR OR 982TRA	

CM2 PORTS

EVEN SM NBR	CM2 '0' SIDE 982TT				CM2 '1' SIDE 982TT			
	RA	TA	RB	TB	RA	TA	RB	TB
SM2	536-088-132		519-088-132		636-088-132		619-088-132	
SM4	536-080-132		519-080-132		636-080-132		619-080-132	
SM6	536-080-100		519-080-100		636-080-100		619-080-100	
SM8	536-072-132		519-072-132		636-072-132		619-072-132	
SM10	536-072-100		519-072-100		636-072-100		619-072-100	
SM12	536-064-132		519-064-132		636-064-132		619-064-132	
SM14	536-064-100		519-064-100		636-064-100		619-064-100	
SM16	536-056-132		519-056-132		636-056-132		619-056-132	
SM18	536-056-100		519-056-100		636-056-100		619-056-100	
SM20	536-048-132		519-048-132		636-048-132		619-048-132	
SM22	536-048-100		519-048-100		636-048-100		619-048-100	
SM24	536-040-132		519-040-132		636-040-132		619-040-132	
SM26	536-040-100		519-040-100		636-040-100		619-040-100	
SM28	536-032-132		519-032-132		636-032-132		619-032-132	
SM30	536-032-100		519-032-100		636-032-100		619-032-100	
SM32	436-088-132		419-088-132		736-088-132		719-088-132	
SM34	436-088-100		419-088-100		736-088-100		719-088-100	
SM36	436-080-132		419-080-132		736-080-132		719-080-132	
SM38	436-080-100		419-080-100		736-080-100		719-080-100	
SM40	436-072-132		419-072-132		736-072-132		719-072-132	
SM42	436-072-100		419-072-100		736-072-100		719-072-100	
SM44	436-064-132		419-064-132		736-064-132		719-064-132	
SM46	436-064-100		419-064-100		736-064-100		719-064-100	
SM48	436-056-132		419-056-132		736-056-132		719-056-132	
SM50	436-056-100		419-056-100		736-056-100		719-056-100	

*** CONTINUED ***

** CONTINUED **
TABLE H3

DUAL FABRIC (EVEN SM,TRCU 1ST OR 2ND CKT)
ORM (HOST OFFICE ONLY)
ODL50 NCT LINKS FROM TRCU1 TO CM2

DESIG	JL101	JL103	JL105	JL107	JL102	JL104	JL106	JL108
NCT	OA		OB		1A		1B	
LINKS	XMTR	REC	XMTR	REC	XMTR	REC	XMTR	REC
TRCU1 CKT 1 G8E OR G12F	( )-066-132 982TR OR 982TRA		( )-082-132 982TR OR 982TRA		( )-114-132 982TR OR 982TRA		( )-130-132 982TR OR 982TRA	
TRCU1 CKT 2 G8E OR G12F	( )-026-132 982TR OR 982TRA		( )-042-132 982TR OR 982TRA		( )-154-132 982TR OR 982TRA		( )-170-132 982TR OR 982TRA	

CM2 PORTS

EVEN SM NBR	CM2 '0' SIDE 982TT				CM2 '1' SIDE 982TT			
	RA	TA	RB	TB	RA	TA	RB	TB
SM52	436-048-132		419-048-132		736-048-132		719-048-132	
SM54	436-048-100		419-048-100		736-048-100		719-048-100	
SM56	436-040-132		419-040-132		736-040-132		719-040-132	
SM58	436-040-100		419-040-100		736-040-100		719-040-100	
SM60	436-032-132		419-032-132		736-032-132		719-032-132	
SM62	436-032-100		419-032-100		736-032-100		719-032-100	
SM64	336-088-132		319-088-132		836-088-132		819-088-132	
SM66	336-088-100		319-088-100		836-088-100		819-088-100	
SM68	336-080-132		319-080-132		836-080-132		819-080-132	
SM70	336-080-100		319-080-100		836-080-100		819-080-100	
SM72	336-072-132		319-072-132		836-072-132		819-072-132	
SM74	336-072-100		319-072-100		836-072-100		819-072-100	
SM76	336-064-132		319-064-132		836-064-132		819-064-132	
SM78	336-064-100		319-064-100		836-064-100		819-064-100	
SM80	336-056-132		319-056-132		836-056-132		819-056-132	
SM82	336-056-100		319-056-100		836-056-100		819-056-100	
SM84	336-048-132		319-048-132		836-048-132		819-048-132	
SM86	336-048-100		319-048-100		836-048-100		819-048-100	
SM88	336-040-132		319-040-132		836-040-132		819-040-132	
SM90	336-040-100		319-040-100		836-040-100		819-040-100	
SM92	336-032-132		319-032-132		836-032-132		819-032-132	
SM94	336-032-100		319-032-100		836-032-100		819-032-100	
SM96	236-088-132		219-088-132		936-088-132		919-088-132	
SM98	236-088-100		219-088-100		936-088-100		919-088-100	

*** CONTINUED ***

COPYRIGHT @ 2001 LUCENT TECHNOLOGIES
ALL RIGHTS RESERVED

BT13

INTERCABINET CABLING
FOR
5ESS * SWITCH
*LUCENT TRADEMARK

DWG SIZE C2 | ISSUE 117

** CONTINUED **
TABLE H3

DUAL FABRIC (EVEN SM,TRCU 1ST OR 2ND CKT)
ORM (HOST OFFICE ONLY)
ODL50 NCT LINKS FROM TRCU1 TO CM2

DESIG	JL101	JL103	JL105	JL107	JL102	JL104	JL106	JL108
NCT	0A		0B		1A		1B	
LINKS	XMTR	REC	XMTR	REC	XMTR	REC	XMTR	REC
TRCU1 CKT 1 G8E OR G12F	( )-066-132 982TR OR 982TRA		( )-082-132 982TR OR 982TRA		( )-114-132 982TR OR 982TRA		( )-130-132 982TR OR 982TRA	
TRCU1 CKT 2 G8E OR G12F	( )-026-132 982TR OR 982TRA		( )-042-132 982TR OR 982TRA		( )-154-132 982TR OR 982TRA		( )-170-132 982TR OR 982TRA	

CM2 PORTS

EVEN SM NBR	CM2 '0' SIDE 982TT				CM2 '1' SIDE 982TT			
	RA	TA	RB	TB	RA	TA	RB	TB
SM100	236-080-132		219-080-132		936-080-132		919-080-132	
SM102	236-080-100		219-080-100		936-080-100		919-080-100	
SM104	236-072-132		219-072-132		936-072-132		919-072-132	
SM106	236-072-100		219-072-100		936-072-100		919-072-100	
SM108	236-064-132		219-064-132		936-064-132		919-064-132	
SM110	236-064-100		219-064-100		936-064-100		919-064-100	
SM112	236-056-132		219-056-132		936-056-132		919-056-132	
SM114	236-056-100		219-056-100		936-056-100		919-056-100	
SM116	236-048-132		219-048-132		936-048-132		919-048-132	
SM118	236-048-100		219-048-100		936-048-100		919-048-100	
SM120	236-040-132		219-040-132		936-040-132		919-040-132	
SM122	236-040-100		219-040-100		936-040-100		919-040-100	
SM124	236-032-132		219-032-132		936-032-132		919-032-132	
SM126	236-032-100		219-032-100		936-032-100		919-032-100	
SM128	136-088-132		119-088-132		1036-088-132		1019-088-132	
SM130	136-088-100		119-088-100		1036-088-100		1019-088-100	
SM132	136-080-132		119-080-132		1036-080-132		1019-080-132	
SM134	136-080-100		119-080-100		1036-080-100		1019-080-100	
SM136	136-072-132		119-072-132		1036-072-132		1019-072-132	
SM138	136-072-100		119-072-100		1036-072-100		1019-072-100	
SM140	136-064-132		119-064-132		1036-064-132		1019-064-132	
SM142	136-064-100		119-064-100		1036-064-100		1019-064-100	
SM144	136-056-132		119-056-132		1036-056-132		1019-056-132	
SM146	136-056-100		119-056-100		1036-056-100		1019-056-100	
SM148	136-048-132		119-048-132		1036-048-132		1019-048-132	

*** CONTINUED ***

** CONTINUED **
TABLE H3

DUAL FABRIC (EVEN SM,TRCU 1ST OR 2ND CKT)
ORM (HOST OFFICE ONLY)
ODL50 NCT LINKS FROM TRCU1 TO CM2

DESIG	JL101	JL103	JL105	JL107	JL102	JL104	JL106	JL108
NCT	0A		0B		1A		1B	
LINKS	XMTR	REC	XMTR	REC	XMTR	REC	XMTR	REC
TRCU1 CKT 1 G8E OR G12F	( )-066-132 982TR OR 982TRA		( )-082-132 982TR OR 982TRA		( )-114-132 982TR OR 982TRA		( )-130-132 982TR OR 982TRA	
TRCU1 CKT 2 G8E OR G12F	( )-026-132 982TR OR 982TRA		( )-042-132 982TR OR 982TRA		( )-154-132 982TR OR 982TRA		( )-170-132 982TR OR 982TRA	

CM2 PORTS

EVEN SM NBR	CM2 '0' SIDE 982TT				CM2 '1' SIDE 982TT			
	RA	TA	RB	TB	RA	TA	RB	TB
SM150	136-048-100		119-048-100		1036-048-100		1019-048-100	
SM152	136-040-132		119-040-132		1036-040-132		1019-040-132	
SM154	136-040-100		119-040-100		1036-040-100		1019-040-100	
SM156	136-032-132		119-032-132		1036-032-132		1019-032-132	
SM158	136-032-100		119-032-100		1036-032-100		1019-032-100	
SM160	036-088-132		019-088-132		1136-088-132		1119-088-132	
SM162	036-088-100		019-088-100		1136-088-100		1119-088-100	
SM164	036-080-132		019-080-132		1136-080-132		1119-080-132	
SM166	036-080-100		019-080-100		1136-080-100		1119-080-100	
SM168	036-072-132		019-072-132		1136-072-132		1119-072-132	
SM170	036-072-100		019-072-100		1136-072-100		1119-072-100	
SM172	036-064-132		019-064-132		1136-064-132		1119-064-132	
SM174	036-064-100		019-064-100		1136-064-100		1119-064-100	
SM176	036-056-132		019-056-132		1136-056-132		1119-056-132	
SM178	036-056-100		019-056-100		1136-056-100		1119-056-100	
SM180	036-048-132		019-048-132		1136-048-132		1119-048-132	
SM182	036-048-100		019-048-100		1136-048-100		1119-048-100	
SM184	036-040-132		019-040-132		1136-040-132		1119-040-132	
SM186	036-040-100		019-040-100		1136-040-100		1119-040-100	
SM188	036-032-132		019-032-132		1136-032-132		1119-032-132	
SM190	036-032-100		019-032-100		1136-032-100		1119-032-100	

TABLE H4

SINGLE FABRIC
ORM (HOST OFFICE ONLY)
ODL50 NCT LINKS FROM TRCU2 TO CM2

DESIG	JL101	JL103	JL105	JL107	JL102	JL104	JL106	JL108
NCT	0A		0B		1A		1B	
LINKS	XMTR	REC	XMTR	REC	XMTR	REC	XMTR	REC
TRCU2 CKT 1 G8C OR G12D	( )-022-132 982TR OR 982TRA		( )-030-132 982TR OR 982TRA		( )-138-132 982TR OR 982TRA		( )-146-132 982TR OR 982TRA	
TRCU2 CKT 2 G8C OR G12D	( )-038-132 982TR OR 982TRA		( )-046-132 982TR OR 982TRA		( )-154-132 982TR OR 982TRA		( )-162-132 982TR OR 982TRA	

CM2 PORTS

SM NBR	CM2 '0' SIDE 982TT				CM2 '1' SIDE 982TT			
	RA	TA	RB	TB	RA	TA	RB	TB
SM1	536-088-132				636-088-132			
SM2	536-080-132				636-080-132			
SM3	536-080-100				636-080-100			
SM4	536-072-132				636-072-100			
SM5	536-072-100				636-064-132			
SM6	536-064-132				636-064-100			
SM7	536-064-100				636-056-132			
SM8	536-056-132				636-056-100			
SM9	536-056-100				636-048-132			
SM10	536-048-132				636-048-100			
SM11	536-048-100				636-040-132			
SM12	536-040-132				636-040-100			
SM13	536-040-100				636-032-132			
SM14	536-032-132				636-032-100			
SM15	536-032-100				619-088-132			
SM16	519-088-132				619-080-132			
SM17	519-080-132				619-080-100			
SM18	519-080-100				619-072-132			
SM19	519-072-132				619-072-100			
SM20	519-072-100				619-064-132			
SM21	519-064-132				619-064-100			
SM22	519-064-100				619-056-132			
SM23	519-056-132				619-056-100			
SM24	519-056-100				619-048-132			
SM25	519-048-132				619-048-132			

*** CONTINUED ***

** CONTINUED **
TABLE H4

SINGLE FABRIC
ORM (HOST OFFICE ONLY)
ODL50 NCT LINKS FROM TRCU2 TO CM2

DESIG	JL101	JL103	JL105	JL107	JL102	JL104	JL106	JL108
NCT	0A		0B		1A		1B	
LINKS	XMTR	REC	XMTR	REC	XMTR	REC	XMTR	REC
TRCU2 CKT 1 G8C OR G12D	( )-022-132 982TR OR 982TRA		( )-030-132 982TR OR 982TRA		( )-138-132 982TR OR 982TRA		( )-146-132 982TR OR 982TRA	
TRCU2 CKT 2 G8C OR G12D	( )-038-132 982TR OR 982TRA		( )-046-132 982TR OR 982TRA		( )-154-132 982TR OR 982TRA		( )-162-132 982TR OR 982TRA	

CM2 PORTS

SM NBR	CM2 '0' SIDE 982TT				CM2 '1' SIDE 982TT			
	RA	TA	RB	TB	RA	TA	RB	TB
SM26	519-048-100				619-048-100			
SM27	519-040-132				619-040-132			
SM28	519-040-100				619-040-100			
SM29	519-032-132				619-032-132			
SM30	519-032-100				619-032-100			
SM31	436-088-132				736-088-132			
SM32	436-088-100				736-088-100			
SM33	436-080-132				736-080-132			
SM34	436-080-100				736-080-100			
SM35	436-072-132				736-072-132			
SM36	436-072-100				736-072-100			
SM37	436-064-132				736-064-132			
SM38	436-064-100				736-064-100			
SM39	436-056-132				736-056-132			
SM40	436-056-100				736-056-100			
SM41	436-048-132				736-048-132			
SM42	436-048-100				736-048-100			
SM43	436-040-132				736-040-132			
SM44	436-040-100				736-040-100			
SM45	436-032-132				736-032-132			
SM46	436-032-100				736-032-100			
SM47	419-088-132				719-088-132			
SM48	419-088-100				719-088-100			
SM49	419-080-132				719-080-132			

*** CONTINUED ***

COPYRIGHT @ 2001 LUCENT TECHNOLOGIES
ALL RIGHTS RESERVED

BT13

INTERCABINET CABLING
FOR
5ESS * SWITCH
*LUCENT TRADEMARK

DWG SIZE C2 | ISSUE 117

** CONTINUED **
TABLE H4

SINGLE FABRIC
ORM (HOST OFFICE ONLY)
ODL50 NCT LINKS FROM TRCU2 TO CM2

DESIG	JL101	JL103	JL105	JL107	JL102	JL104	JL106	JL108
NCT	0A		0B		1A		1B	
LINKS	XMTR	REC	XMTR	REC	XMTR	REC	XMTR	REC
TRCU2 CKT 1 G8C OR G12D	( )-022-132 982TR OR 982TRA		( )-030-132 982TR OR 982TRA		( )-138-132 982TR OR 982TRA		( )-146-132 982TR OR 982TRA	
TRCU2 CKT 2 G8C OR G12D	( )-038-132 982TR OR 982TRA		( )-046-132 982TR OR 982TRA		( )-154-132 982TR OR 982TRA		( )-162-132 982TR OR 982TRA	

CM2 PORTS

SM NBR	CM2 '0' SIDE 982TT				CM2 '1' SIDE 982TT			
	RA	TA	RB	TB	RA	TA	RB	TB
SM50	419-080-100				719-080-100			
SM51	419-072-132				719-072-132			
SM52	419-072-100				719-072-100			
SM53	419-064-132				719-064-132			
SM54	419-064-100				719-064-100			
SM55	419-056-132				719-056-132			
SM56	419-056-100				719-056-100			
SM57	419-048-132				719-048-132			
SM58	419-048-100				719-048-100			
SM59	419-040-132				719-040-132			
SM60	419-040-100				719-040-100			
SM61	419-032-132				719-032-132			
SM62	419-032-100				719-032-100			
SM63	336-088-132				836-088-132			
SM64	336-088-100				836-088-100			
SM65	336-080-132				836-080-132			
SM66	336-080-100				836-080-100			
SM67	336-072-132				836-072-132			
SM68	336-072-100				836-072-100			
SM69	336-064-132				836-064-132			
SM70	336-064-100				836-064-100			
SM71	336-056-132				836-056-132			
SM72	336-056-100				836-056-100			
SM73	336-048-132				836-048-132			
SM74	336-048-100				836-048-100			

*** CONTINUED ***

** CONTINUED **
TABLE H4

SINGLE FABRIC
ORM (HOST OFFICE ONLY)
ODL50 NCT LINKS FROM TRCU2 TO CM2

DESIG	JL101	JL103	JL105	JL107	JL102	JL104	JL106	JL108
NCT	0A		0B		1A		1B	
LINKS	XMTR	REC	XMTR	REC	XMTR	REC	XMTR	REC
TRCU2 CKT 1 G8C OR G12D	( )-022-132 982TR OR 982TRA		( )-030-132 982TR OR 982TRA		( )-138-132 982TR OR 982TRA		( )-146-132 982TR OR 982TRA	
TRCU2 CKT 2 G8C OR G12D	( )-038-132 982TR OR 982TRA		( )-046-132 982TR OR 982TRA		( )-154-132 982TR OR 982TRA		( )-162-132 982TR OR 982TRA	

CM2 PORTS

SM NBR	CM2 '0' SIDE 982TT				CM2 '1' SIDE 982TT			
	RA	TA	RB	TB	RA	TA	RB	TB
SM75	336-040-132				836-040-132			
SM76	336-040-100				836-040-100			
SM77	336-032-132				836-032-132			
SM78	336-032-100				836-032-100			
SM79	319-088-132				819-088-132			
SM80	319-088-100				819-088-100			
SM81	319-080-132				819-080-132			
SM82	319-080-100				819-080-100			
SM83	319-072-132				819-072-132			
SM84	319-072-100				819-072-100			
SM85	319-064-132				819-064-132			
SM86	319-064-100				819-064-100			
SM87	319-056-132				819-056-132			
SM88	319-056-100				819-056-100			
SM89	319-048-132				819-048-132			
SM90	319-048-100				819-048-100			
SM91	319-040-132				819-040-132			
SM92	319-040-100				819-040-100			
SM93	319-032-132				819-032-132			
SM94	319-032-100				819-032-100			

TABLE H5

DUAL FABRIC (ODD SM,TRCU2 1ST OR 2ND CKT)
ORM (HOST OFFICE ONLY)
ODL50 NCT LINKS FROM TRCU2 TO CM2

DESIG	JL101	JL103	JL105	JL107	JL102	JL104	JL106	JL108
NCT	0A		0B		1A		1B	
LINKS	XMTR	REC	XMTR	REC	XMTR	REC	XMTR	REC
TRCU2 CKT 1 G8C OR G12D	( )-022-132 982TR OR 982TRA		( )-030-132 982TR OR 982TRA		( )-138-132 982TR OR 982TRA		( )-146-132 982TR OR 982TRA	
TRCU2 CKT 2 G8C OR G12D	( )-038-132 982TR OR 982TRA		( )-046-132 982TR OR 982TRA		( )-154-132 982TR OR 982TRA		( )-162-132 982TR OR 982TRA	

CM2 PORTS

ODD SM NBR	CM2 '0' SIDE 982TT		CM2 '1' SIDE 982TT	
	RA	TA	RA	TA
SM1	536-088-132	519-088-132	636-088-132	619-088-132
SM3	536-080-132	519-080-132	636-080-132	619-080-132
SM5	536-080-100	519-080-100	636-080-100	619-080-100
SM7	536-072-132	519-072-132	636-072-132	619-072-132
SM9	536-072-100	519-072-100	636-072-100	619-072-100
SM11	536-064-132	519-064-132	636-064-132	619-064-132
SM13	536-064-100	519-064-100	636-064-100	619-064-100
SM15	536-056-132	519-056-132	636-056-132	619-056-132
SM17	536-056-100	519-056-100	636-056-100	619-056-100
SM19	536-048-132	519-048-132	636-048-132	619-048-132
SM21	536-048-100	519-048-100	636-048-100	619-048-100
SM23	536-040-132	519-040-132	636-040-132	619-040-132
SM25	536-040-100	519-040-100	636-040-100	619-040-100
SM27	536-032-132	519-032-132	636-032-132	619-032-132
SM29	536-032-100	519-032-100	636-032-100	619-032-100
SM31	436-088-132	419-088-132	736-088-132	719-088-132
SM33	436-088-100	419-088-100	736-088-100	719-088-100
SM35	436-080-132	419-080-132	736-080-132	719-080-132
SM37	436-080-100	419-080-100	736-080-100	719-080-100
SM39	436-072-132	419-072-132	736-072-132	719-072-132
SM41	436-072-100	419-072-100	736-072-100	719-072-100
SM43	436-064-132	419-064-132	736-064-132	719-064-132
SM45	436-064-100	419-064-100	736-064-100	719-064-100
SM47	436-056-132	419-056-132	736-056-132	719-056-132
SM49	436-056-100	419-056-100	736-056-100	719-056-100

*** CONTINUED ***

** CONTINUED **
TABLE H5

DUAL FABRIC (ODD SM,TRCU2 1ST OR 2ND CKT)
ORM (HOST OFFICE ONLY)
ODL50 NCT LINKS FROM TRCU2 TO CM2

DESIG	JL101	JL103	JL105	JL107	JL102	JL104	JL106	JL108
NCT	0A		0B		1A		1B	
LINKS	XMTR	REC	XMTR	REC	XMTR	REC	XMTR	REC
TRCU2 CKT 1 G8C OR G12D	( )-022-132 982TR OR 982TRA		( )-030-132 982TR OR 982TRA		( )-138-132 982TR OR 982TRA		( )-146-132 982TR OR 982TRA	
TRCU2 CKT 2 G8C OR G12D	( )-038-132 982TR OR 982TRA		( )-046-132 982TR OR 982TRA		( )-154-132 982TR OR 982TRA		( )-162-132 982TR OR 982TRA	

CM2 PORTS

ODD SM NBR	CM2 '0' SIDE 982TT		CM2 '1' SIDE 982TT	
	RA	TA	RA	TA
SM51	436-048-132	419-048-132	736-048-132	719-048-132
SM53	436-048-100	419-048-100	736-048-100	719-048-100
SM55	436-040-132	419-040-132	736-040-132	719-040-132
SM57	436-040-100	419-040-100	736-040-100	719-040-100
SM59	436-032-132	419-032-132	736-032-132	719-032-132
SM61	436-032-100	419-032-100	736-032-100	719-032-100
SM63	336-088-132	319-088-132	836-088-132	819-088-132
SM65	336-088-100	319-088-100	836-088-100	819-088-100
SM67	336-080-132	319-080-132	836-080-132	819-080-132
SM69	336-080-100	319-080-100	836-080-100	819-080-100
SM71	336-072-132	319-072-132	836-072-132	819-072-132
SM73	336-072-100	319-072-100	836-072-100	819-072-100
SM75	336-064-132	319-064-132	836-064-132	819-064-132
SM77	336-064-100	319-064-100	836-064-100	819-064-100
SM79	336-056-132	319-056-132	836-056-132	819-056-132
SM81	336-056-100	319-056-100	836-056-100	819-056-100
SM83	336-048-132	319-048-132	836-048-132	819-048-132
SM85	336-048-100	319-048-100	836-048-100	819-048-100
SM87	336-040-132	319-040-132	836-040-132	819-040-132
SM89	336-040-100	319-040-100	836-040-100	819-040-100
SM91	336-032-132	319-032-132	836-032-132	819-032-132
SM93	336-032-100	319-032-100	836-032-100	819-032-100
SM95	236-088-132	219-088-132	936-088-132	919-088-132
SM97	236-088-100	219-088-100	936-088-100	919-088-100

*** CONTINUED ***

COPYRIGHT @ 2001 LUCENT TECHNOLOGIES
ALL RIGHTS RESERVED

BT13

INTERCABINET CABLING
FOR
5ESS * SWITCH
*LUCENT TRADEMARK

DWG SIZE C2 | ISSUE 117

PRINTED IN U.S.A.

** CONTINUED **
TABLE H5

DUAL FABRIC (ODD SM,TRCU2 1ST OR 2ND CKT)
ORM (HOST OFFICE ONLY)
ODL50 NCT LINKS FROM TRCU2 TO CM2

DESIG	JL101	JL103	JL105	JL107	JL102	JL104	JL106	JL108
NCT	OA		OB		1A		1B	
LINKS	XMTR	REC	XMTR	REC	XMTR	REC	XMTR	REC
TRCU2 CKT 1 G8C OR G12D	( )-022-132 982TR OR 982TRA		( )-030-132 982TR OR 982TRA		( )-138-132 982TR OR 982TRA		( )-146-132 982TR OR 982TRA	
TRCU2 CKT 2 G8C OR G12D	( )-038-132 982TR OR 982TRA		( )-046-132 982TR OR 982TRA		( )-154-132 982TR OR 982TRA		( )-162-132 982TR OR 982TRA	

CM2 PORTS

ODD SM NBR	CM2 '0' SIDE 982TT				CM2 '1' SIDE 982TT			
	RA	TA	RA	TA	RA	TA	RA	TA
SM99	236-080-132		219-080-132		936-080-132		919-080-132	
SM101	236-080-100		219-080-100		936-080-100		919-080-100	
SM103	236-072-132		219-072-132		936-072-132		919-072-132	
SM105	236-072-100		219-072-100		936-072-100		919-072-100	
SM107	236-064-132		219-064-132		936-064-132		919-064-132	
SM109	236-064-100		219-064-100		936-064-100		919-064-100	
SM111	236-056-132		219-056-132		936-056-132		919-056-132	
SM113	236-056-100		219-056-100		936-056-100		919-056-100	
SM115	236-048-132		219-048-132		936-048-132		919-048-132	
SM117	236-048-100		219-048-100		936-048-100		919-048-100	
SM119	236-040-132		219-040-132		936-040-132		919-040-132	
SM121	236-040-100		219-040-100		936-040-100		919-040-100	
SM123	236-032-132		219-032-132		936-032-132		919-032-132	
SM125	236-032-100		219-032-100		936-032-100		919-032-100	
SM127	136-088-132		119-088-132		1036-088-132		1019-088-132	
SM129	136-088-100		119-088-100		1036-088-100		1019-088-100	
SM131	136-080-132		119-080-132		1036-080-132		1019-080-132	
SM133	136-080-100		119-080-100		1036-080-100		1019-080-100	
SM135	136-072-132		119-072-132		1036-072-132		1019-072-132	
SM137	136-072-100		119-072-100		1036-072-100		1019-072-100	
SM139	136-064-132		119-064-132		1036-064-132		1019-064-132	
SM141	136-064-100		119-064-100		1036-064-100		1019-064-100	
SM143	136-056-132		119-056-132		1036-056-132		1019-056-132	
SM145	136-056-100		119-056-100		1036-056-100		1019-056-100	
SM147	136-048-132		119-048-132		1036-048-132		1019-048-132	

*** CONTINUED ***

** CONTINUED **
TABLE H5

DUAL FABRIC (ODD SM,TRCU2 1ST OR 2ND CKT)
ORM (HOST OFFICE ONLY)
ODL50 NCT LINKS FROM TRCU2 TO CM2

DESIG	JL101	JL103	JL105	JL107	JL102	JL104	JL106	JL108
NCT	OA		OB		1A		1B	
LINKS	XMTR	REC	XMTR	REC	XMTR	REC	XMTR	REC
TRCU2 CKT 1 G8C OR G12D	( )-022-132 982TR OR 982TRA		( )-030-132 982TR OR 982TRA		( )-138-132 982TR OR 982TRA		( )-146-132 982TR OR 982TRA	
TRCU2 CKT 2 G8C OR G12D	( )-038-132 982TR OR 982TRA		( )-046-132 982TR OR 982TRA		( )-154-132 982TR OR 982TRA		( )-162-132 982TR OR 982TRA	

CM2 PORTS

ODD SM NBR	CM2 '0' SIDE 982TT				CM2 '1' SIDE 982TT			
	RA	TA	RA	TA	RA	TA	RA	TA
SM149	136-048-100		119-048-100		1036-048-100		1019-048-100	
SM151	136-040-132		119-040-132		1036-040-132		1019-040-132	
SM153	136-040-100		119-040-100		1036-040-100		1019-040-100	
SM155	136-032-132		119-032-132		1036-032-132		1019-032-132	
SM157	136-032-100		119-032-100		1036-032-100		1019-032-100	
SM159	036-088-132		019-088-132		1136-088-132		1119-088-132	
SM161	036-088-100		019-088-100		1136-088-100		1119-088-100	
SM163	036-080-132		019-080-132		1136-080-132		1119-080-132	
SM165	036-080-100		019-080-100		1136-080-100		1119-080-100	
SM167	036-072-132		019-072-132		1136-072-132		1119-072-132	
SM169	036-072-100		019-072-100		1136-072-100		1119-072-100	
SM171	036-064-132		019-064-132		1136-064-132		1119-064-132	
SM173	036-064-100		019-064-100		1136-064-100		1119-064-100	
SM175	036-056-132		019-056-132		1136-056-132		1119-056-132	
SM177	036-056-100		019-056-100		1136-056-100		1119-056-100	
SM179	036-048-132		019-048-132		1136-048-132		1119-048-132	
SM181	036-048-100		019-048-100		1136-048-100		1119-048-100	
SM183	036-040-132		019-040-132		1136-040-132		1119-040-132	
SM185	036-040-100		019-040-100		1136-040-100		1119-040-100	
SM187	036-032-132		019-032-132		1136-032-132		1119-032-132	
SM189	036-032-100		019-032-100		1136-032-100		1119-032-100	

TABLE H6

DUAL FABRIC (EVEN SM,TRCU2 1ST OR 2ND CKT)
ORM (HOST OFFICE ONLY)
ODL50 NCT LINKS FROM TRCU2 TO CM2

DESIG	JL101	JL103	JL105	JL107	JL102	JL104	JL106	JL108
NCT	OA		OB		1A		1B	
LINKS	XMTR	REC	XMTR	REC	XMTR	REC	XMTR	REC
TRCU2 CKT 1 G8C OR G12D	( )-022-132 982TR OR 982TRA		( )-030-132 982TR OR 982TRA		( )-138-132 982TR OR 982TRA		( )-146-132 982TR OR 982TRA	
TRCU2 CKT 2 G8C OR G12D	( )-038-132 982TR OR 982TRA		( )-046-132 982TR OR 982TRA		( )-154-132 982TR OR 982TRA		( )-162-132 982TR OR 982TRA	

CM2 PORTS

EVEN SM NBR	CM2 '0' SIDE 982TT				CM2 '1' SIDE 982TT			
	RB	TB	RB	TB	RB	TB	RB	TB
SM2	536-088-132		519-088-132		636-088-132		619-088-132	
SM4	536-080-132		519-080-132		636-080-132		619-080-132	
SM6	536-080-100		519-080-100		636-080-100		619-080-100	
SM8	536-072-132		519-072-132		636-072-132		619-072-132	
SM10	536-072-100		519-072-100		636-072-100		619-072-100	
SM12	536-064-132		519-064-132		636-064-132		619-064-132	
SM14	536-064-100		519-064-100		636-064-100		619-064-100	
SM16	536-056-132		519-056-132		636-056-132		619-056-132	
SM18	536-056-100		519-056-100		636-056-100		619-056-100	
SM20	536-048-132		519-048-132		636-048-132		619-048-132	
SM22	536-048-100		519-048-100		636-048-100		619-048-100	
SM24	536-040-132		519-040-132		636-040-132		619-040-132	
SM26	536-040-100		519-040-100		636-040-100		619-040-100	
SM28	536-032-132		519-032-132		636-032-132		619-032-132	
SM30	536-032-100		519-032-100		636-032-100		619-032-100	
SM32	436-088-132		419-088-132		736-088-132		719-088-132	
SM34	436-088-100		419-088-100		736-088-100		719-088-100	
SM36	436-080-132		419-080-132		736-080-132		719-080-132	
SM38	436-080-100		419-080-100		736-080-100		719-080-100	
SM40	436-072-132		419-072-132		736-072-132		719-072-132	
SM42	436-072-100		419-072-100		736-072-100		719-072-100	
SM44	436-064-132		419-064-132		736-064-132		719-064-132	
SM46	436-064-100		419-064-100		736-064-100		719-064-100	
SM48	436-056-132		419-056-132		736-056-132		719-056-132	
SM50	436-056-100		419-056-100		736-056-100		719-056-100	

*** CONTINUED ***

** CONTINUED **
TABLE H6

DUAL FABRIC (EVEN SM,TRCU2 1ST OR 2ND CKT)
ORM (HOST OFFICE ONLY)
ODL50 NCT LINKS FROM TRCU2 TO CM2

DESIG	JL101	JL103	JL105	JL107	JL102	JL104	JL106	JL108
NCT	OA		OB		1A		1B	
LINKS	XMTR	REC	XMTR	REC	XMTR	REC	XMTR	REC
TRCU2 CKT 1 G8C OR G12D	( )-022-132 982TR OR 982TRA		( )-030-132 982TR OR 982TRA		( )-138-132 982TR OR 982TRA		( )-146-132 982TR OR 982TRA	
TRCU2 CKT 2 G8C OR G12D	( )-038-132 982TR OR 982TRA		( )-046-132 982TR OR 982TRA		( )-154-132 982TR OR 982TRA		( )-162-132 982TR OR 982TRA	

CM2 PORTS

EVEN SM NBR	CM2 '0' SIDE 982TT				CM2 '1' SIDE 982TT			
	RB	TB	RB	TB	RB	TB	RB	TB
SM52	436-048-132		419-048-132		736-048-132		719-048-132	
SM54	436-048-100		419-048-100		736-048-100		719-048-100	
SM56	436-040-132		419-040-132		736-040-132		719-040-132	
SM58	436-040-100		419-040-100		736-040-100		719-040-100	
SM60	436-032-132		419-032-132		736-032-132		719-032-132	
SM62	436-032-100		419-032-100		736-032-100		719-032-100	
SM64	336-088-132		319-088-132		836-088-132		819-088-132	
SM66	336-088-100		319-088-100		836-088-100		819-088-100	
SM68	336-080-132		319-080-132		836-080-132		819-080-132	
SM70	336-080-100		319-080-100		836-080-100		819-080-100	
SM72	336-072-132		319-072-132		836-072-132		819-072-132	
SM74	336-072-100		319-072-100		836-072-100		819-072-100	
SM76	336-064-132		319-064-132		836-064-132		819-064-132	
SM78	336-064-100		319-064-100		836-064-100		819-064-100	
SM80	336-056-132		319-056-132		836-056-132		819-056-132	
SM82	336-056-100		319-056-100		836-056-100		819-056-100	
SM84	336-048-132		319-048-132		836-048-132		819-048-132	
SM86	336-048-100		319-048-100		836-048-100		819-048-100	
SM88	336-040-132		319-040-132		836-040-132		819-040-132	
SM90	336-040-100		319-040-100		836-040-100		819-040-100	
SM92	336-032-132		319-032-132		836-032-132		819-032-132	
SM94	336-032-100		319-032-100		836-032-100		819-032-100	
SM96	236-088-132		219-088-132		936-088-132		919-088-132	
SM98	236-088-100		219-088-100		936-088-100		919-088-100	

*** CONTINUED ***

COPYRIGHT @ 2001 LUCENT TECHNOLOGIES
ALL RIGHTS RESERVED

BT13

INTERCABINET CABLING
FOR
5ESS * SWITCH
*LUCENT TRADEMARK

DWG SIZE C2 | ISSUE 117

** CONTINUED **
TABLE H6

DUAL FABRIC (EVEN SM,TRCU2 1ST OR 2ND CKT)
ORM (HOST OFFICE ONLY)
ODL50 NCT LINKS FROM TRCU2 TO CM2

DESIG	JL101	JL103	JL105	JL107	JL102	JL104	JL106	JL108
NCT	OA		OB		1A		1B	
LINKS	XMTR	REC	XMTR	REC	XMTR	REC	XMTR	REC
TRCU2 CKT 1 G8C OR G12D	( )-022-132 982TR OR 982TRA		( )-030-132 982TR OR 982TRA		( )-138-132 982TR OR 982TRA		( )-146-132 982TR OR 982TRA	
TRCU2 CKT 2 G8C OR G12D	( )-038-132 982TR OR 982TRA		( )-046-132 982TR OR 982TRA		( )-154-132 982TR OR 982TRA		( )-162-132 982TR OR 982TRA	

CM2 PORTS

EVEN SM NBR	CM2 '0' SIDE 982TT				CM2 '1' SIDE 982TT			
	RB	TB	RB	TB	RB	TB	RB	TB
SM100	236-080-132		219-080-132		936-080-132		919-080-132	
SM102	236-080-100		219-080-100		936-080-100		919-080-100	
SM104	236-072-132		219-072-132		936-072-132		919-072-132	
SM106	236-072-100		219-072-100		936-072-100		919-072-100	
SM108	236-064-132		219-064-132		936-064-132		919-064-132	
SM110	236-064-100		219-064-100		936-064-100		919-064-100	
SM112	236-056-132		219-056-132		936-056-132		919-056-132	
SM114	236-056-100		219-056-100		936-056-100		919-056-100	
SM116	236-048-132		219-048-132		936-048-132		919-048-132	
SM118	236-048-100		219-048-100		936-048-100		919-048-100	
SM120	236-040-132		219-040-132		936-040-132		919-040-132	
SM122	236-040-100		219-040-100		936-040-100		919-040-100	
SM124	236-032-132		219-032-132		936-032-132		919-032-132	
SM126	236-032-100		219-032-100		936-032-100		919-032-100	
SM128	136-088-132		119-088-132		1036-088-132		1019-088-132	
SM130	136-088-100		119-088-100		1036-088-100		1019-088-100	
SM132	136-080-132		119-080-132		1036-080-132		1019-080-132	
SM134	136-080-100		119-080-100		1036-080-100		1019-080-100	
SM136	136-072-132		119-072-132		1036-072-132		1019-072-132	
SM138	136-072-100		119-072-100		1036-072-100		1019-072-100	
SM140	136-064-132		119-064-132		1036-064-132		1019-064-132	
SM142	136-064-100		119-064-100		1036-064-100		1019-064-100	
SM144	136-056-132		119-056-132		1036-056-132		1019-056-132	
SM146	136-056-100		119-056-100		1036-056-100		1019-056-100	
SM148	136-048-132		119-048-132		1036-048-132		1019-048-132	

*** CONTINUED ***

** CONTINUED **
TABLE H6

DUAL FABRIC (EVEN SM,TRCU2 1ST OR 2ND CKT)
ORM (HOST OFFICE ONLY)
ODL50 NCT LINKS FROM TRCU2 TO CM2

DESIG	JL101	JL103	JL105	JL107	JL102	JL104	JL106	JL108
NCT	OA		OB		1A		1B	
LINKS	XMTR	REC	XMTR	REC	XMTR	REC	XMTR	REC
TRCU2 CKT 1 G8C OR G12D	( )-022-132 982TR OR 982TRA		( )-030-132 982TR OR 982TRA		( )-138-132 982TR OR 982TRA		( )-146-132 982TR OR 982TRA	
TRCU2 CKT 2 G8C OR G12D	( )-038-132 982TR OR 982TRA		( )-046-132 982TR OR 982TRA		( )-154-132 982TR OR 982TRA		( )-162-132 982TR OR 982TRA	

CM2 PORTS

EVEN SM NBR	CM2 '0' SIDE 982TT				CM2 '1' SIDE 982TT			
	RB	TB	RB	TB	RB	TB	RB	TB
SM150	136-048-100		119-048-100		1036-048-100		1019-048-100	
SM152	136-040-132		119-040-132		1036-040-132		1019-040-132	
SM154	136-040-100		119-040-100		1036-040-100		1019-040-100	
SM156	136-032-132		119-032-132		1036-032-132		1019-032-132	
SM158	136-032-100		119-032-100		1036-032-100		1019-032-100	
SM160	036-088-132		019-088-132		1136-088-132		1119-088-132	
SM162	036-088-100		019-088-100		1136-088-100		1119-088-100	
SM164	036-080-132		019-080-132		1136-080-132		1119-080-132	
SM166	036-080-100		019-080-100		1136-080-100		1119-080-100	
SM168	036-072-132		019-072-132		1136-072-132		1119-072-132	
SM170	036-072-100		019-072-100		1136-072-100		1119-072-100	
SM172	036-064-132		019-064-132		1136-064-132		1119-064-132	
SM174	036-064-100		019-064-100		1136-064-100		1119-064-100	
SM176	036-056-132		019-056-132		1136-056-132		1119-056-132	
SM178	036-056-100		019-056-100		1136-056-100		1119-056-100	
SM180	036-048-132		019-048-132		1136-048-132		1119-048-132	
SM182	036-048-100		019-048-100		1136-048-100		1119-048-100	
SM184	036-040-132		019-040-132		1136-040-132		1119-040-132	
SM186	036-040-100		019-040-100		1136-040-100		1119-040-100	
SM188	036-032-132		019-032-132		1136-032-132		1119-032-132	
SM190	036-032-100		019-032-100		1136-032-100		1119-032-100	

TABLE MA

MTB CABLE GROUPS FOR DCTU FROM CSU

*** CONTINUED ***

COPYRIGHT @ 2001 LUCENT TECHNOLOGIES
ALL RIGHTS RESERVED

BT13

INTERCABINET CABLING
FOR
5ESS * SWITCH
*LUCENT TRADEMARK

DWG SIZE C2 | ISSUE 117

PRINTED IN U.S.A.

** CONTINUED **
TABLE MA

FROM CSU J5D003FS				TO DCTU J1P023AM			PMU ()			
MMSU (CSU) POS()				POS	POS	POS	POS ()	POS	POS	NOTE
MTB PORT	EQL			-	-	-	( )-178-146		-	
	UNIT POS	J1	TERM	-	-	-	J2		-	
0	( )	024	100	CABLE ASSEMBLY DWG ED5D502-18, GROUPS LISTED BELOW						1, 54, 55
1			103							
2			106							
3			109	-	-	-	GR200	-	-	
4			113							
5			116							
6			119							
7			122							
8			132							
9			135							
10			138							
11			141	-	-	-	GR200	-	-	
12			145							
13			148							
14			151							
-			-							
0		032	100							
1			103							
2			106							
3			109	-	-	-	GR200	-	-	
4			113							
5			116							
6			119							
7			122							
8			132							
9			135							
10			138							
11			141	-	-	-	GR200	-	-	
12			145							
13			148							
14			151							
-			-							
0		040	100							
1			103							
2			106							

*** CONTINUED ***

** CONTINUED **
TABLE MA

3			109	-	-	-	GR200	-	-	
4			113							
5			116							
6			119							
7			122							
8			132							
9			135							
10			138							
11			141	-	-	-	GR200	-	-	
12			145							
13			148							
14			151							
-			-							

TABLE MA1

FROM CSU J5D003FS				MTB CABLE GROUPS FOR LU2 FROM CSU TO LINE UNIT J5D004AC OR J5D004AE						
MMSU (CSU) POS ()				POS	POS	POS	POS ( )	POS	POS	NOTE
MTB PORT	MMSU (CSU) EQL						( ) 096-322 SG0 J2	( ) 096-322 SG1 J3		
	UNIT POS	J1	TERM							
0	( )	024	100	CABLE ASSEMBLY DWG ED5D502-22, GROUPS LISTED BELOW						1, 54
1			103							
2			106							
3			109	-	-	-	GR200	-	-	
4			113							
5			116							
6			119							
7			122							
8			132							
9			135							
10			138							
11			141	-	-	-	GR200	-	-	
12			145							
13			148							
14			151							
-			-							
0		032	100							
1			103							

*** CONTINUED ***

COPYRIGHT @ 2001 LUCENT TECHNOLOGIES
ALL RIGHTS RESERVED

BT13

INTERCABINET CABLING
FOR
5ESS * SWITCH
*LUCENT TRADEMARK

DWG SIZE C2 | ISSUE 117

PRINTED IN U.S.A.

** CONTINUED **
TABLE MA1

2			106								
3			109								
4			113	-	-	-	GR200	-	-		
5			116								
6			119								
7			122								
8			132								
9			135								
10			138								
11			141								
12			145	-	-	-	GR200	-	-		
13			148								
14			151								
-			-								
0		040	100								
1			103								
2			106								
3			109	-	-	-	GR200	-	-		
4			113								
5			116								
6			119								
7			122								
8			132								
9			135								
10			138								
11			141	-	-	-	GR200	-	-		
12			145								
13			148								
14			151								
-			-								

TABLE MA2

MTB CABLE GROUPS FOR LU3 FROM CSU											
FROM CSU J5D003FS				TO LINE UNIT J5D004AD							
MMSU (CSU) POS(0				POS	POS	POS	POS ( )		POS	POS	NOTE
MTB PORT	MMSU (CSU) EQL UNIT POS	J1	TERM				( ) 084-322 SG0 J2	( ) 084-322 SG1 J3		NOT AVAILABLE FOR LU -	
0	( )	024	100	CABLE ASSEMBLY DWG ED5D502-22, GROUPS LISTED BELOW							1,

*** CONTINUED ***

** CONTINUED **
TABLE MA2

1			103								
2			106								
3			109								
4			113	-	-	-	GR200	-	-		
5			116								
6			119								
7			122								
8			132								
9			135								
10			138								
11			141								
12			145	-	-	-	GR200	-	-		
13			148								
14			151								
-			-								
0		032	100								
1			103								
2			106								
3			109	-	-	-	GR200	-	-		
4			113								
5			116								
6			119								
7			122								
8			132								
9			135								
10			138								
11			141								
12			145	-	-	-	GR200	-	-		
13			148								
14			151								
-			-								
0		040	100								
1			103								
2			106								
3			109	-	-	-	GR200	-	-		
4			113								
5			116								
6			119								
7			122								

54

*** CONTINUED ***

COPYRIGHT @ 2001 LUCENT TECHNOLOGIES
ALL RIGHTS RESERVED

BT13

INTERCABINET CABLING
FOR
5ESS * SWITCH
*LUCENT TRADEMARK

DWG SIZE C2 | ISSUE 117

LUCENT TECHNOLOGIES INC | ED5D500-21 | SHEET D85 OF 292

PRINTED IN U.S.A.

** CONTINUED **
TABLE MA2

8			132								
9			135								
10			138								
11			141								
12			145	-	-	-	GR200	-	-		
13			148								
14			151								
-			-								

TABLE MA3

MTB CABLE GROUPS FOR TU FROM CSU										
FROM CSU J5D003FS				TO TRUNK UNIT J5D003AC OR J5D003AG						
MMSU (CSU) POS()				POS	POS	POS	POS	POS()	POS	POS	NOTE
MTB PORT	MMSU EQL UNIT POS	MMSU EQL J1	MMSU EQL TERM					( )-108-109 J2			
0	( )	024	100	CABLE ASSEMBLY DWG ED5D502-23, GROUPS LISTED BELOW							1, 54
1			103								
2			106								
3			109								
4			113					GR200			
5			116								
6			119								
7			122								
8			132								
9			135								
10			138								
11			141					GR200			
12			145								
13			148								
14			151								
-			-								
0		032	100								
1			103								
2			106								
3			109								
4			113					GR200			
5			116								
6			119								
7			122								

*** CONTINUED ***

** CONTINUED **
TABLE MA3

8			132								
9			135								
10			138								
11			141						GR200		
12			145								
13			148								
14			151								
-			-								
0		040	100								
1			103								
2			106								
3			109						GR200		
4			113								
5			116								
6			119								
7			122								
8			132								
9			135								
10			138								
11			141						GR200		
12			145								
13			148								
14			151								
-			-								

COPYRIGHT @ 2001 LUCENT TECHNOLOGIES
ALL RIGHTS RESERVED

BT13

INTERCABINET CABLING
FOR
5ESS * SWITCH
*LUCENT TRADEMARK

DWG SIZE C2 | ISSUE 117

LUCENT TECHNOLOGIES INC | ED5D500-21 | SHEET D86 OF 292

PRINTED IN U.S.A.

TABLE MA4

MTB CABLE GROUPS FOR TU TST TRK CIRCUIT PACK FROM CSU SN107, SN712

FROM CSU J5D003FS			TO (ONLY ONE CKT PACK POSITION) TST TRK CKT ON TU J5D003AC OR J5D003AG															
MMSU (CSU) POS ()			TU POS ( ) EQL ( )-(**)-104 (SEE REMARKS)															REMARKS
PORTS	EQL		TERM	SN107 CKT PACK POSITION														
	UNIT POS	J1		032 J2	040 J2	048 J2	056 J2	064 J2	072 J2	080 J2	088 J2	124 J2	132 J2	140 J2	148 J2	156 J2	164 J2	172 J2	180 J2	
0,1	( )	024	100	CABLE ASSY DWG ED5D502-24, GROUPS LISTED BELOW														
2,3			106															
4,5			113	GR200				GR200				GR200				GR200		
6,7			119															(**) DESIGNATE CKT PC POS (032-180) PER JOB SPEC. SEE NOTE 54.
8,9			132															
10,11			138	GR200				GR200				GR200				GR200		
12,13			145															
- -			-															
0,1		032	100															
2,3			106	GR200				GR200				GR200				GR200		
4,5			113															
6,7			119															
8,9			132															
10,11			138	GR200				GR200				GR200				GR200		
12,13			145															
- -			-															
0,1		040	100															
2,3			106	GR200				GR200				GR200				GR200		
4,5			113															
6,7			119															
8,9			132															
10,11			138	GR200				GR200				GR200				GR200		
12,13			145															
- -			-															

TABLE MA5

MTB CABLE GROUPS FOR ISLU2

FROM MMSU (CSU)J5D003FS				TO ISLU2 (4AL)		
MMSU (CSU) POS ( )				POS ( )		NOTE
MTB PORT	MMSU EQL			( ) 038-154	( ) 150-154	
	UNIT POS	J1	TERM	SG0 J2	SG1 J3	
0	( )	024	100	CABLE ASSEMBLY DWG ED5D502-21		1, 54

*** CONTINUED ***

** CONTINUED **
TABLE MA5

1			103		
2			106		
3			109	GR200	
4			113		
5			116		
6			119		
7			122		
8			132		
9			135		
10			138		
11			141	GR200	
12			145		
13			148		
14			151		
-			-		
0		032	100		
1			103		
2			106		
3			109	GR200	
4			113		
5			116		
6			119		
7			122		
8			132		
9			135		
10			138		
11			141	GR200	
12			145		
13			148		
14			151		
-			-		
0		040	100		
1			103		
2			106		
3			109	GR200	
4			113		
5			116		
6			119		
7			122		
8			132		

*** CONTINUED ***

** CONTINUED **
TABLE MA5

9			135	
10			138	
11			141	GR200
12			145	
13			148	
14			151	
-			-	
0		032	100	
1			103	
2			106	
3			109	GR201
4			113	
5			116	
6			119	
7			122	
8			132	
9			135	
10			138	
11			141	GR201
12			145	
13			148	
14			151	
-			-	
0		032	100	
1			103	
2			106	
3			109	GR201
4			113	
5			116	
6			119	
7			122	

*** CONTINUED ***

TABLE MA6

MTB CABLE GROUPS FOR ISLU

FROM MMSU (CSU)J5D003FS				TO ISLU (4AK)		
MMSU (CSU) POS ( )				POS ( )		NOTE
MTB PORT	MMSU EQL			( ) 036-145	( ) 146-145	
	UNIT POS	J1	TERM	SG0 J2	SG1 J3	
0	( )	024	100	CABLE ASSEMBLY DWG ED5D502-21		1, 54
1			103			
2			106			
3			109	GR201		
4			113			
5			116			
6			119			
7			122			
8			132			
9			135			
10			138			
11			141	GR201		
12			145			
13			148			
14			151			
-			-			
0		032	100			
1			103			
2			106			
3			109	GR201		
4			113			
5			116			
6			119			
7			122			
8			132			

*** CONTINUED ***

COPYRIGHT @ 2001 LUCENT TECHNOLOGIES
ALL RIGHTS RESERVED

BT13

INTERCABINET CABLING
FOR
5ESS * SWITCH
*LUCENT TRADEMARK

DWG SIZE C2 | ISSUE 117

LUCENT TECHNOLOGIES INC | ED5D500-21 | SHEET D87 OF 292

PRINTED IN U.S.A.

** CONTINUED **
TABLE MA6

8			132		
9			135		
10			138		
11			141	GR201	
12			145		
13			148		
14			151		
-			-		
0		040	100		
1			103		
2			106		
3			109		
4			113	GR201	
5			116		
6			119		
7			122		
8			132		
9			135		
10			138		
11			141	GR201	
12			145		
13			148		
14			151		
-			-		

TABLE N4

DUAL FABRIC ODL50
NCT LINKS FROM TSIU4-2(3NB-1) TO CM2

CABLE DESIG		JL113(EVEN) JL112(ODD)	JL111(EVEN) JL110(ODD)	JL113A(EVEN) JL112A(ODD)	JL111A(EVEN) JL110A(ODD)
NCT LINKS	PORT	TX	RX	TX	RX
		SIDE 0		SIDE 1	
SM ( ) SMC 0	2	00051-029-TX	00051-029-RX	00051-111-TX	00051-111-RX
TSIU4-2 J5D00 3NB-2 G13	3	00055-029-TX	00055-029-RX	00055-111-TX	00055-111-RX
	4	00043-037-TX	00043-037-RX	00043-119-TX	00043-119-RX
	5	00047-037-TX	00047-037-RX	00047-119-TX	00047-119-RX
	6	00051-037-TX	00051-037-RX	00051-119-TX	00051-119-RX
	7	00055-037-TX	00055-037-RX	00055-119-TX	00055-119-RX
	8	00043-045-TX	00043-045-RX	00043-127-TX	00043-127-RX
	9	00047-045-TX	00047-045-RX	00047-127-TX	00047-127-RX

*** CONTINUED ***

** CONTINUED **
TABLE N4

	10	00051-045-TX	00051-045-RX	00051-127-TX	00051-127-RX
	11	00055-045-TX	00055-045-RX	00055-127-TX	00055-127-RX
	12	00043-053-TX	00043-053-RX	00043-135-TX	00043-135-RX
	13	00047-053-TX	00047-053-RX	00047-135-TX	00047-135-RX
	14	00051-053-TX	00051-053-RX	00051-135-TX	00051-135-RX
	15	00055-053-TX	00055-053-RX	00055-135-TX	00055-135-RX
	16	00043-061-TX	00043-061-RX	00043-143-TX	00043-143-RX
	17	00047-061-TX	00047-061-RX	00047-143-TX	00047-143-RX
	18	00051-061-TX	00051-061-RX	00051-143-TX	00051-143-RX
	19	00055-061-TX	00055-061-RX	00055-143-TX	00055-143-RX
	20	00043-069-TX	00043-069-RX	00043-151-TX	00043-151-RX
	21	00047-069-TX	00047-069-RX	00047-151-TX	00047-151-RX
	22	00051-069-TX	00051-069-RX	00051-151-TX	00051-151-RX
	23	00055-069-TX	00055-069-RX	00055-151-TX	00055-151-RX
	24	00043-077-TX	00043-077-RX	00043-159-TX	00043-159-RX
	25	00047-077-TX	00047-077-RX	00047-159-TX	00047-159-RX
	26	00051-077-TX	00051-077-RX	00051-159-TX	00051-159-RX
	27	00055-077-TX	00055-077-RX	00055-159-TX	00055-159-RX
	28	00043-085-TX	00043-085-RX	00043-167-TX	00043-167-RX
	29	00047-085-TX	00047-085-RX	00047-167-TX	00047-167-RX
	30	00051-085-TX	00051-085-RX	00051-167-TX	00051-167-RX
	31	00055-085-TX	00055-085-RX	00055-167-TX	00055-167-RX
	32	00043-093-TX	00043-093-RX	00043-175-TX	00043-175-RX
	33	00047-093-TX	00047-093-RX	00047-175-TX	00047-175-RX
	34	00051-093-TX	00051-093-RX	00051-175-TX	00051-175-RX
	35	00055-093-TX	00055-093-RX	00055-175-TX	00055-175-RX
	36	00043-101-TX	00043-101-RX	00043-183-TX	00043-183-RX
	37	00047-101-TX	00047-101-RX	00047-183-TX	00047-183-RX
	38	00051-101-TX	00051-101-RX	00051-183-TX	00051-183-RX
	39	00055-101-TX	00055-101-RX	00055-183-TX	00055-183-RX

CM2 PORTS

SM NBR ( )	CM2 '0' SIDE BKF1 RA/RB	CM2 '0' SIDE BKF1 TA/TB	CM2 '0' SIDE BKF1 RA/RB	CM2 '0' SIDE BKF1 TA/TB	CM2 '1' SIDE BKF1 RA/RB	CM2 '1' SIDE BKF1 TA/TB	CM2 '1' SIDE BKF1 RA/RB	CM2 '1' SIDE BKF1 TA/TB
	EVEN PORTS		ODD PORTS		EVEN PORTS		ODD PORTS	
SM( )	536-080-100		519-080-100		636-080-100		619-080-100	
SM( )	536-072-100		519-072-100		636-072-100		619-072-100	
SM( )	536-064-100		519-064-100		636-064-100		619-064-100	
SM( )	536-056-100		519-056-100		636-056-100		619-056-100	
SM( )	536-048-100		519-048-100		636-048-100		619-048-100	

*** CONTINUED ***

** CONTINUED **
TABLE N4

SM( )	536-040-100	519-040-100	636-040-100	619-040-100
SM( )	536-032-100	519-032-100	636-032-100	619-032-100
SM( )	436-088-100	419-088-100	736-088-100	719-088-100
SM( )	436-080-100	419-080-100	736-080-100	719-080-100
SM( )	436-072-100	419-072-100	736-072-100	719-072-100
SM( )	436-064-100	419-064-100	736-064-100	719-064-100
SM( )	436-056-100	419-056-100	736-056-100	719-056-100
SM( )	436-048-100	419-048-100	736-048-100	719-048-100
SM( )	436-040-100	419-040-100	736-040-100	719-040-100
SM( )	436-032-100	419-032-100	736-032-100	719-032-100
SM( )	336-088-100	319-088-100	836-088-100	819-088-100
SM( )	336-080-100	319-080-100	836-080-100	819-080-100
SM( )	336-072-100	319-072-100	836-072-100	819-072-100
SM( )	336-064-100	319-064-100	836-064-100	819-064-100
SM( )	336-056-100	319-056-100	836-056-100	819-056-100
SM( )	336-048-100	319-048-100	836-048-100	819-048-100
SM( )	336-040-100	319-040-100	836-040-100	819-040-100
SM( )	336-032-100	319-032-100	836-032-100	819-032-100
SM( )	236-088-100	219-088-100	936-088-100	919-088-100
SM( )	236-080-100	219-080-100	936-080-100	919-080-100
SM( )	236-072-100	219-072-100	936-072-100	919-072-100
SM( )	236-064-100	219-064-100	936-064-100	919-064-100
SM( )	236-056-100	219-056-100	936-056-100	919-056-100
SM( )	236-048-100	219-048-100	936-048-100	919-048-100
SM( )	236-040-100	219-040-100	936-040-100	919-040-100
SM( )	236-032-100	219-032-100	936-032-100	919-032-100
SM( )	136-088-100	119-088-100	1036-088-100	1019-088-100
SM( )	136-080-100	119-080-100	1036-080-100	1019-088-100
SM( )	136-072-100	119-072-100	1036-072-100	1019-072-100
SM( )	136-064-100	119-064-100	1036-064-100	1019-064-100
SM( )	136-056-100	119-056-100	1036-056-100	1019-056-100
SM( )	136-048-100	119-048-100	1036-048-100	1019-048-100
SM( )	136-040-100	119-040-100	1036-040-100	1019-048-100
SM( )	136-032-100	119-032-100	1036-032-100	1019-032-100
SM( )	036-088-100	019-088-100	1136-088-100	1119-088-100
SM( )	036-080-100	019-080-100	1136-080-100	1119-080-100
SM( )	036-072-100	019-072-100	1136-072-100	1119-072-100
SM( )	036-064-100	019-064-100	1136-064-100	1119-064-100
SM( )	036-056-100	019-056-100	1136-056-100	1119-056-100
SM( )	036-048-100	019-048-100	1136-048-100	1119-048-100

*** CONTINUED ***

COPYRIGHT @ 2001 LUCENT TECHNOLOGIES
ALL RIGHTS RESERVED

BT13

INTERCABINET CABLING
FOR
5ESS * SWITCH
*LUCENT TRADEMARK

DWG SIZE C2 | ISSUE 117

PRINTED IN U.S.A.

** CONTINUED **
TABLE N4

SM( )	036-040-100	019-040-100	1136-040-100	1119-040-100
SM( )	036-032-100	019-032-100	1136-032-100	1119-032-100

TABLE N5

SM( )	536-080-100	636-080-100
SM( )	536-072-100	636-072-100
SM( )	536-064-100	636-064-100
SM( )	536-056-100	636-056-100
SM( )	536-048-100	636-048-100
SM( )	536-040-100	636-040-100
SM( )	536-032-100	636-032-100
SM( )	519-080-100	619-080-100
SM( )	519-072-100	619-072-100
SM( )	519-064-100	619-064-100
SM( )	519-056-100	619-056-100
SM( )	519-048-100	619-048-100
SM( )	519-040-100	619-040-100
SM( )	519-032-100	619-032-100
SM( )	436-088-100	736-088-100
SM( )	436-080-100	736-080-100
SM( )	436-072-100	736-072-100
SM( )	436-064-100	736-064-100
SM( )	436-056-100	736-056-100
SM( )	436-048-100	736-048-100
SM( )	436-040-100	736-040-100
SM( )	436-032-100	736-032-100
SM( )	419-088-100	719-088-100
SM( )	419-080-100	719-080-100
SM( )	419-072-100	719-072-100
SM( )	419-064-100	719-064-100
SM( )	419-056-100	719-056-100
SM( )	419-048-100	719-048-100
SM( )	419-040-100	719-040-100
SM( )	419-032-100	719-032-100
SM( )	336-088-100	836-088-100
SM( )	336-080-100	836-080-100
SM( )	336-072-100	836-072-100
SM( )	336-064-100	836-064-100
SM( )	336-056-100	836-056-100

*** CONTINUED ***

** CONTINUED **
TABLE N5

SM( )	336-048-100	836-048-100
SM( )	336-040-100	836-040-100
SM( )	336-032-100	836-032-100
SM( )	319-088-100	819-088-100
SM( )	319-080-100	819-080-100
SM( )	319-072-100	819-072-100
SM( )	319-064-100	819-064-100
SM( )	319-056-100	819-056-100
SM( )	319-048-100	819-048-100
SM( )	319-040-100	819-040-100
SM( )	319-032-100	819-032-100

TABLE N6

SM( )	( )19-088-132	( )19-100-132
SM( )	( )28-088-132	( )28-100-132
SM( )	( )45-088-132	( )45-100-132
SM( )	( )53-088-132	( )53-100-132
SM( )	( )62-088-132	( )62-100-132

TABLE N7

[782,783]

PCT LINKS FROM TSIU4 (3NB-1) TO PSU2

CABLE DESIG		JL113	JL111	JL113A	JL113A
NCT	PORT	TX	RX	TX	RX
LINKS		SIDE 0		SIDE 1	
SM( ) SMC 0 TSIU4 J5D00 3NB-1 G17	2	00051-018-TX	00051-018-RX	00051-106-TX	00051-106-RX
	3	00055-018-TX	00055-018-RX	00055-106-TX	00055-106-RX
	4	00043-026-TX	00043-026-RX	00043-114-TX	00043-114-RX
	5	00047-026-TX	00047-026-RX	00047-114-TX	00047-114-RX
	6	00051-026-TX	00051-026-RX	00051-114-TX	00051-114-RX
	7	00055-026-TX	00055-026-RX	00055-114-TX	00055-114-RX
	8	00043-034-TX	00043-034-RX	00043-122-TX	00043-122-RX
	9	00047-034-TX	00047-034-RX	00047-122-TX	00047-122-RX
	10	00051-034-TX	00051-034-RX	00051-122-TX	00051-122-RX
	11	00055-034-TX	00055-034-RX	00055-122-TX	00055-122-RX
	12	00043-042-TX	00043-042-RX	00043-130-TX	00043-130-RX
	13	00047-042-TX	00047-042-RX	00047-130-TX	00047-130-RX
	14	00051-042-TX	00051-042-RX	00051-130-TX	00051-130-RX
	15	00055-042-TX	00055-042-RX	00055-130-TX	00055-130-RX

*** CONTINUED ***

** CONTINUED **
TABLE N7

	16	00043-050-TX	00043-050-RX	00043-138-TX	00043-138-RX
	17	00047-050-TX	00047-050-RX	00047-138-TX	00047-138-RX
	18	00051-050-TX	00051-050-RX	00051-138-TX	00051-138-RX
	19	00055-050-TX	00055-050-RX	00055-138-TX	00055-138-RX
	20	00043-060-TX	00043-060-RX	00043-148-TX	00043-148-RX
	21	00047-060-TX	00047-060-RX	00047-148-TX	00047-148-RX
	22	00051-060-TX	00051-060-RX	00051-148-TX	00051-148-RX
	23	00055-060-TX	00055-060-RX	00055-148-TX	00055-148-RX
	24	00043-068-TX	00043-068-RX	00043-156-TX	00043-156-RX
	25	00047-068-TX	00047-068-RX	00047-156-TX	00047-156-RX
	26	00051-068-TX	00051-068-RX	00051-156-TX	00051-156-RX
	27	00055-068-TX	00055-068-RX	00055-156-TX	00055-156-RX
	28	00043-076-TX	00043-076-RX	00043-164-TX	00043-164-RX
	29	00047-076-TX	00047-076-RX	00047-164-TX	00047-164-RX
	30	00051-076-TX	00051-076-RX	00051-164-TX	00051-164-RX
	31	00055-076-TX	00055-076-RX	00055-164-TX	00055-164-RX
	32	00043-084-TX	00043-084-RX	00043-172-TX	00043-172-RX
	33	00047-084-TX	00047-084-RX	00047-172-TX	00047-172-RX
	34	00051-084-TX	00051-084-RX	00051-172-TX	00051-172-RX
	35	00055-084-TX	00055-084-RX	00055-172-TX	00055-172-RX
	36	00043-092-TX	00043-092-RX	00043-180-TX	00043-180-RX
	37	00047-092-TX	00047-092-RX	00047-180-TX	00047-180-RX
	38	00051-092-TX	00051-092-RX	00051-180-TX	00051-180-RX
	39	00055-092-TX	00055-092-RX	00055-180-TX	00055-180-RX

PSU2 PORTS

PSU2 '0' SIDE 982TN				PSU2 '1' SIDE 982TN			
EVEN PORTS		ODD PORTS		EVEN PORTS		ODD PORTS	
RA	TA	RB	TB	RA	TA	RB	TB
SM( )	( )19-088-132			( )19-100-132			
SM( )	( )28-088-132			( )28-100-132			
SM( )	( )45-088-132			( )45-100-132			
SM( )	( )53-088-132			( )53-100-132			
SM( )	( )62-088-132			( )62-100-132			

COPYRIGHT @ 2001 LUCENT TECHNOLOGIES
ALL RIGHTS RESERVED

BT13

INTERCABINET CABLING
FOR
5ESS * SWITCH
*LUCENT TRADEMARK

DWG SIZE C2 | ISSUE 117

LUCENT TECHNOLOGIES INC | ED5D500-21 | SHEET D89 OF 292

PRINTED IN U.S.A.

TABLE T

THIS TABLE REPLACED ALL STOCKLIST ITEMS WITH AN 'S' IN THE NOTE SYS COL [1400]*

ED5D500-21 GROUP	PRODUCT IDENTIFIER	COMCODE	DESCRIPTION	QTY'S	BULK CABLE
4B	ED5D518-30,G2		CABLE ASSEMBLY	4	
5A	ED5D518-30,G3		CABLE ASSEMBLY	4	
	ED5D518-30,G4			4	
5B	ED5D518-30,G3		CABLY ASSEMBLY	4	
	ED5D518-30,G4			4	
6	ED5D518-30,G5		CABLE ASSEMBLY	4	
	ED5D518-30,G6			4	
6B	ED5D518-30,G5		CABLE ASSEMBLY	4	
	ED5D518-30,G6			4	
7	ED5D518-30,G5		CABLE ASSEMBLY	4	
	ED5D518-30,G6			4	
8A	ED5D518-30,G3		CABLE ASSEMBLY	4	
	ED5D518-30,G4			4	
9A	ED5D518-30,G3		CABLY ASSEMBLY	4	
	ED5D518-30,G4			4	
24A		105412530	812A-4/26	1	X-DIM
27A		105412498	808A32/26	1	X-DIM
28		105412522	811A8/26	1	X-DIM
28B		107237984	A25W	1	
28E		105419535	820AS-10/26	1	X-DIM
		106557077	750A	1	X-DIM
29B		105412530	812A-4/26	1	X-DIM
30		105412530	812A-4/26	1	X-DIM
36A		105412530	812A-4/26	1	X-DIM
39A		105412530	812A-4/26	1	X-DIM
39B		105412498	808A32/26	1	X-DIM
41A		105412530	812A-4/26	1	X-DIM
52		105412530	812A-4/26	1	X-DIM
53		105412530	812A-4/26	1	X-DIM
58		101963239	A25B	1	
59		106914658	A25W	1	
62		105412530	812A-4/26	1	X-DIM
72A		105412530	812A-4/26	1	X-DIM
87		180009185	LS1A-A	1	X-DIM
		103884904	2000A	1	X-DIM
	ED5D518-30,G21		CABLE ASSEMBLY	2	

*** CONTINUED ***

** CONTINUED **

TABLE T

THIS TABLE REPLACED ALL STOCKLIST ITEMS WITH AN 'S' IN THE NOTE SYS COL [1400]*

ED5D500-21 GROUP	PRODUCT IDENTIFIER	COMCODE	DESCRIPTION	QTY'S	BULK CABLE
87A (DA)		180009185	LS1A-1	1	X-DIM
		103884904	2000A	1	X-DIM
87B (DA)	ED5D518-30,G21		CABLE ASSEMBLY	2	
88		180009185	LS1A-1	2	X-DIM
		103884904	2000A	1	X-DIM
89 (DA)	ED5D518-30,G10		CABLE ASSEMBLY	2	
90		106469794	LS1A-SC	1	X-DIM
		106704703	9000A3	1	X-DIM
91		106470834	FS1E-A	1	X-DIM
		106704703	9000A3	1	X-DIM
92		106469588	LL1A-SC	2	X-DIM
		106762362	9860A3	2	X-DIM
93		106471527	FL1E-A	2	X-DIM
		106762362	9860A3	2	X-DIM
94		106199987	LL1A-A	2	X-DIM
		106762362	9860A3	2	X-DIM
95		106471527	FL1E-A	2	X-DIM
		106762362	9860A3	2	X-DIM
128A		105412530	812A-4/26	1	X-DIM
156D		105412514	810A128/26	2	X-DIM
157D		105412514	810A128/26	3	X-DIM
158D		105412514	810A128/26	4	X-DIM
159D		105412514	810A128/26	5	X-DIM
175A		105412514	810A128/26	4	X-DIM
176A		105412514	810A128/26	6	X-DIM
177A		105412514	810A128/26	8	X-DIM
460		105412530	812A-4/26	1	X-DIM
461		106989106	606C	1	X-DIM
461A		107798142	1249002C	1	X-DIM
462		107259046	1249002A	1	X-DIM

TABLE Z

FIGURE INDEX,INCL EQPT,FUNCTION AND DESCRIPTION

FIG.	EQPT	FUNCT	ED5D500-21 GROUPS	DESCRIPTION	NOTE
A	LU2 TU RES PNL LNI	T,R	G180-182 (LU2) G120 (TU) G22 (RES PNL) G22B (RES PNL) G23 (RES PNL) G180B-182B (LNI) G156C-158C (LNI)	711 CONN DF 711 CONN DF 711 CONN 89M DF BLK TRW CONN 89M DF BLK 711 CONN DF SWC LNI 711 CONN DF	SEE TBL A1
A1	LU2 TU RES PNL LNI	T,R	G180A-182A (LU2) G120A (TU) G23A (RES PNL) G180B-182B (LNI) G156D-158D (LNI)	SWC DF SWC DF SWC DF SWC LNI SWC DF	
A2	LU2	T,R	G180D-182D G180E-182E	TRW TELZON DF TRW CONN DF	
A3	LU3	T,R	G183-186 G183E-186E G183A-186A G183D-186D	711 CONN DF TRW CONN DF SWC DF TRW TELZON DF	
A4	LU3/LNI	T,R	G183B-186B G156C-159C G156D-159D	SWC LNI 711 DF SWC DF	
A5	LU2	T,R	G201-203 G201B-203B	711 CONN DF TRW CONN DF	
A6	LU3	T,R	G204-207 G204B-207B	711 CONN DF TRW CONN DF	
A7	LU2 (64 PRS)	T,R	G211B-213B G211A-213A	TRW CONN DF SWC DF	
A8	LU3 (64 PRS)	T,R	G214B-217B G214A-217A	TRW CONN DF SWC DF	
B	DLTU 3AD-1 DCLU 3AR-1 DCLUS 3AS-1	T1	G130 G134 G135	KS CONN 607C CABLE	(655' MAX)
B1	DLTU J5D003AD-2 DCLU J5D003AR-2 DCLUSJ5D003AS-2 DLTU2J5D024AA-1 DLTU2J5D024AA-1 DLTU3J5D003FN-1 DLTU3J5D003FN-1 DLTU3J5D003FN-1 DLTU3J5D003FN-1 DLTU3J5D003FN-1	T1	130A 134A 135A 145 145A 146 146A 147 147A	982AE CONN 607C CABLE 982AE CONN 609C CABLE 982AE CONN 124920A CABLE 982AE CONN 609C CABLE 982AE CONN 124920A CABLE 982AE CONN 609C CABLE 982AE CONN 124920A CABLE	
C	PPMU	T,R	G170	711 CONN DF	
C1	PPMU	T,R	G170A	SWC DF	
D	DCTU	MTB	G141 G142 G143	MTB (0-7) MTB (8-14) GRD WINDOW	
E	MMSU	MTB		TYPICAL CABLING REAR VIEW	
F	MMSU	MTIB		TYPICAL CABLING	
G	MMSU/MSU	GRD WN	G103	GROUND WINDOW	
H	CABLE RACK			SIDE VIEW	
J	OAU	SC,SD	G35,36,35B,24, G45 G44 G20 G52,53	SC,SD TERMINAL FIELD TBL (UN33) TN137(SD) TN867(SA)	

*** CONTINUED ***

COPYRIGHT @ 2001 LUCENT TECHNOLOGIES
ALL RIGHTS RESERVED

BT13

INTERCABINET CABLING
FOR
5ESS * SWITCH
*LUCENT TRADEMARK

DWG SIZE C2 | ISSUE 117

PRINTED IN U.S.A.

** CONTINUED **
TABLE Z

FIGURE INDEX,INCL EQPT,FUNCTION AND DESCRIPTION

FIG.	EQPT	FUNCT	ED5D500-21 GROUPS	DESCRIPTION	NOTE
J1	AUDIBLE PNL LAMPS	ALARM	G35A,35B, G52,53 G36,36A	REPLC'D BY FIG. J2,J3 & J4	
J2	AUDIBLE PNL LAMPS	ALARM	G36 G35B G52 G53	AUDIBLE AND VISUAL ALARM WITHOUT RARU (J5D005CB)	
J3 (DA)	AUDIBLE PNL LAMPS	ALARM		REPLC'D WITH FIG. J4	
J4	AUDIBLE PNL LAMPS	ALARM	G35A,36A, G35C,36C G36 G52,53	AUDIBLE AND VISUAL ALARMS WHEN RARU (J5D005CB) IS SPECF'D	
K	CM2 INTERCOMM BUS	COMM BUS	G41A,41C,42A,42B G42C,42D,137	CM2 COMM BUS MULT (MULT STARTS AT SM)	SEE TBL KA1,KA2
	CM2 INTERCOMM BUS	COMM BUS	G42B,41D,42D 42A,41A	CM2 COMM BUS MULT (MULT STARTS AT CM2)	
M2	SM,ORM (HOST)	NCT	G5A G5B G8A,9A	MCTU,MCTU2,TRCU TO CM2 (SINGLE FABRIC)	ODL40
M3	SM,ORM (HOST)	NCT	G5A G5B G8A,9A	MCTU,MCTU2,TRCU TO CM2 ('0'SIDE) (DUAL FABRIC)	ODL40
M3 CONT	SM,ORM (HOST)	NCT	G5A G5B G8A,9A	MCTU,MCTU2,TRCU TO CM2 ('1'SIDE) (DUAL FABRIC)	ODL40
M4	TRM (HOST)	NCT	G6 G6B G7	MCTU,MCTU2 TO CM2 (SINGLE FABRIC)	ODL40
M5	TRM (HOST)	NCT	G6 G6B G7	MCTU,MCTU2 TO CM2 ('O'SIDE) (DUAL FABRIC)	ODL40
M5 CONT	TRM (HOST)	NCT	G6 G6B G7	MCTU,MCTU2 TO CM2 ('1'SIDE) (DUAL FABRIC)	ODL40
M6	SM,ORM (HOST)	NCT	G10 G10A G8C	MCTU TO CM2 SINGLE FABRIC MCTU2 TO CM2 TRCU2 TO CM2	ODL50
M7	SM,ORM (HOST)	NCT	G10 G10A G8C	MCTU TO CM2 DUAL FABRIC-'O' MCTU2 TO CM2 ORM TO CM2	ODL50
M7 CONT	SM,ORM (HOST)	NCT	G10 G10A G8C	MCTU TO CM2 DUAL FABRIC-'1' MCTU2 TO CM2 ORM TO CM2	ODL50 1
N	RCU	SC,SD T1 REF	G80 G80A,80B G80C,80D		
N1	ASU ED5D586-10	ALARM	G190,191,193 198,199	ALARMS FOR MMRSM,ORM,TRM (WITHOUT AUDIBLE PNL)	
N2	ASU ED5D586-10	ALARM	G190-199	ALARMS FOR MMRSM,ORM,TRM (WITH AUDIBLE PNL)	
N3	ASU2	SCSD	G189,191,193	ALARMS FOR MMRSM,ORM,TRM	

*** CONTINUED ***

** CONTINUED **
TABLE Z

FIGURE INDEX,INCL EQPT,FUNCTION AND DESCRIPTION

FIG.	EQPT	FUNCT	ED5D500-21 GROUPS	DESCRIPTION	NOTE
	ED5D678-10	ALARM	198,199	(WITHOUT AUDIBLE PNL)	
N4	ASU2 ED5D678-10	SCSD ALARM	G189,191-199	ALARMS FOR MMRSM,ORM,TRM (WITH AUDIBLE ALM PNL)	
R	ORM TRCU1	IN,OUT	G85A	DSX3 COAX CABLING COAX-FEED THRU BUS BAR	
S	ORM TRCU2	IN,OUT	G86	DSX3 45MB COAX CABLING (ELECTRICAL OPTION)	COAX
S1	ORM TRCU2	IN,OUT	G887	LGX (NON-AT&T) 90MB OPTION (OPTICAL OPTION)	FIBER OPTICS
S2	ORM TRCU2	IN,OUT	G88 G89	LGX (AT&T) 90MB OPTION (OPTICAL OPTION)	FIBER OPTICS
T	TU	T,R	G121 G121B	711 CONN DF(89M1GE11-128) TRW CONN DF(89M1HE21-128)	
T1	TU	T,R		BLOCK ASSIGNMENT	
T2	TU	T,R		BLOCK ASSIGNMENT	

COPYRIGHT @ 2001 LUCENT TECHNOLOGIES
ALL RIGHTS RESERVED

BT13

INTERCABINET CABLING
FOR
5ESS * SWITCH
*LUCENT TRADEMARK

DWG SIZE C2 | ISSUE 117

LUCENT TECHNOLOGIES INC | ED5D500-21 | SHEET D91 OF 292

PRINTED IN U.S.A.