STOCKLIST

GROUP	PL. QUAN.	NO.	DESCRIPTION	NOTE	
3	2	ED-50119-12	GP 2 ANCHOR BOLT ASSEMBLY		
1	1	P-490684	SLOTTED FITTING		05
2	2	P-490684			
1,2	4	P-496644	END CAP		
A	2	P-496644	END CAP		3
1,2	2	P-404113	"U" FITTING		
1	2	P-450291	SUPPORT (CHANNEL)		
2	2	P-450291	SUPPORT (CHANNEL)		
D	OMIT 2	P-68227			
C	OMIT 1	P-68227			20
2	2	P-68227			
1	1	P-68227	THREADED ROD 5/8-11 X 1-0		
1	1	P-468821	THREADED ROD (LH) 5/8-11 X 0-8		
2	2	P-468821			
C	1	P-267576	THREADED ROD 5/8-11 X 0-8		125
D	2	P-267576			
1	1	KS-19990	L-5 SHOCK MOUNT(VARIABLE STIFFNESS)		
2	2	KS-19990			
C	OMIT 1	KS-19990			
D	OMIT 2	KS-19990			13
3	1	KS-20009	L-1 RESTRAINER		
C	1	KS-20245	L-1 SHOCK MOUNT (VERIABLE LOAD)		
D	2	KS-20245			
1	1		G-2570 TURNBUCKLE GALVANIZED 5/8X	3A	35
2	2		(BODY ONLY)		
1	2		G-4061 HEX NUT 5/8-11 UNC-LH-GALV	3A	
2	4				
					40
1	6		K-5570 NUT 1/2-13	3B	
2	10				
					145
B	1	P-422793	HEX H CAP SCREW 1/4-20 X 1 1/4		
3	2	P-127312	3/8-16 X 1		
1,2	8	P-170293	1/2-13 X 1 1/2		
					50
1	6	P-290192	HEX SKT H CAP SCREW 3/8-16 X 1 1/4		55
2	12	P-290192	HEX SKT H CAP SCREW 3/8-16 X 1 1/4		
					180
1	12	P-284163	WASHER .367 X .734 X .071		
2	24	P-284163	.367 X .734 X .071		
3	2	P-284163	.367 X .734 X .071		
1	8	P-284169	.531 X 1.000 X .090		67
1	4	P-284175	.642 X 1.250 X .112		
2	10	P-284169	.530 X .000 X .090		
					75
B	1	P-367748	LOCKWASHER (1/4)		
1	6	P-182959	(3/8)		
2	12	P-182959	(3/8)		
3	2	P-182959	(3/8)		75
1	4	P-210443	(5/8)		
					180
B	1	P-230756	HEX NUT 1/4-20		
1	6	P-182907	3/8-16		
2	12	P-182907	3/8-16		
3	2	P-182907	3/8-16		185
1	7	P-205261	5/8-11		
2	14	P-205261	5/8		
					190
					195
					200
					205
					210
					215
					220

ED-82305-10

SHEET INDEX

TABLE A (ENGINEERING INFORMATION)

MATERIAL	REMARKS
	FROM WP PART OF AC SWBD KS-5697 SL96 SL-96E
SLOPING BAY FLOOR WITH	
BACK TO BACK LINEUP	
ONE RESTRAINER	(7,10,6)
	END CAP END CAP
	ANC. BOLT SHEET
SINGLE LINEUP	USE WITH GP 1
BACK TO BACK LINEUP	USE WITH GP 2

NOTES:

A1. THESE ITEMS MAY BE OBTAINED FROM SUPPLIES LISTED BELOW OR APPROVED EQUAL.

A2. DIMENSIONS IN BRACKETS ARE FOR INFORMATION ONLY.

A3. THE FLOOR SHALL BE DRILLED TO THE ANCHORAGE DEPTH SHOWN IN SECTION FOR THE MOUNTING FASTENING FURNISHED.

A4. THE SHOCK MOUNT SHALL BE ADJUSTED TO MEET THE ALLOWABLE DEFLECTION FOR THE ACTUAL WEIGHT OF THE BAY, SEE ED-82305-14 AND ED-97315-12.

A5. THE CABINET SHALL BE DRILLED TWO SIX 7/16 INCH HOLES IN THE TOP FOR 2 PIECE CHANNEL AND THE 7/16 INCH HOLES IN THE BOTTOM FOR RESTRAINER, SEE FIG. A(B)(C).

A6. THESE DIMENSIONS MAY BE CHANGED TO BALANCE HAT OR LINEUP.

A7. ADJUST THE BUCKLE INTO THE RESTRAINER TO 6 INCHES FROM THE FLOOR.

A8. THIS SUPPORT MAY BE FABRICATED FOR ONE BAY OR CUT TO LENGTH OF LINEUP TO SIMPLIFY OVERFRAME CHANGE ARRANGEMENT WHEN EQUIPMENT IS THE SAME.

A9. WHEN NECESSARY TO DRILL ADJOINING SHEET METAL CABINETS LOCATE SITE INCH HOLES AS SHOWN TO CORNER OF PEDESTAL.

DRAWING BASE	
SCREEN ATTN	
	SS SWBD

S2. ASSOCIATED DRAWINGS:

ED-50119-12	ANCHOR BOLT ASSEMBLY
KS-15697	AC SWBD
ED-82114-80	BA MET GUB FRWK
M-341-00	CABLING PLAN FWD
KS-20-503	ARRANGEMENT FOR HARDENED OFFICE, SUPPORTING SYSTEM
KS-20-499	SUPPORTING CHANNEL
KS-20-501 OR KS-20-12	POWER CABLING AND CABLE RACK IN ACCORDANCE WITH BSP AA 612
ED-97315-12	HARDENED OFFICE ARMORTAXT SUSPENDED FROM CEILING CHANNEL
ED-50282-84	HARDENED RELAY RACK

S3. GIVEN MATERIAL PROPERTIES SHOWN IN TABLE A.

S4. FOR GENERAL REQUIREMENTS OF THE SHOCK MOUNT ON THE RESTRAINER SEE ED-97315-12 AND ED-82305-14.

S5. FOR HARDENED OFFICE SUPERSTRUCTURE SEE ED-97315-12.

S6. THE CABLES SHALL BE RESHUNTED FROM THE CABLE RACK TO THE TOP OF THE BAY WITH SUFFICIENT SLACK TO MEET THE REQUIREMENTS OF BSP AA 612.01.

S7. FURNISH THE FOLLOWING MATERIAL:

GR 1 P-	THREADED ROD 5/8-11
GR 2 P-	(LENGTH AS REQ'D)
P-450291	CHANNEL 2-6 (GIAS REQ'D)
P-450291	CHANNEL 1-2 (GIAS REQ'D)
P-450291	CHANNEL 2-0 (GIAS REQ'D)
GR 3 ED-50119-12	ANCHOR BOLT ASSEMBLY (GROUP 2 FOR WATERPROOFING WHEN REQ'D)

S8. THE AC SWITCHBOARD SHALL BE ORDERED AS KS-15697 AC MODIFIED FOR HARDENED SITE APPLICATION PER FRANK ADAM ELECTRIC CO. DRAWING NO. 2-4296-A CABINET REINFORCING, RE-1553-1 CABINET REINFORCING, RE-1001 SWITCH PANEL ASSEMBLY.

S9. THE FLOOR SHALL BE DRILLED AS SHOWN IN SECTION 2 AND B AND ON ED-50119-12.

S10. FOR ISOLATED (INDIVIDUAL) BAY A SECOND RESTRAINER (GP 3) SHALL BE ORDERED AND THE INSTALLER INSTRUCTED TO DRILL THE FLOOR IN LIEU OF FRAMEWORK PER SECTION A AND FIGURE C. FRAMEWORK SHOULD BE RAN TO THE NEXT ADJACENT POSITION.

SHEET INDEX NOTES

1. WHEN CHANGES ARE MADE IN THIS DRAWING ONLY THOSE SHEETS AFFECTED WILL BE REISSUED.
2. THIS SHEET INDEX IS ONLY ISSUED WHEN BROUGHT UP TO DATE EACH TIME ANY SHEET OF THE DRAWING IS REISSUED OR A NEW SHEET IS ADDED.
3. THE ISSUE NUMBER ASSIGNED TO A CHANGED OR A NEW SHEET WILL BE THE SAME ISSUE NUMBER AS THAT OF THE SHEET INDEX.
4. SHEETS THAT ARE NOT CHANGED WILL RETAIN THEIR EXISTING ISSUE NUMBER.
5. THE LAST ISSUE NUMBER OF THE SHEET INDEX IS RECOGNIZED AS THE LATEST ISSUE NUMBER OF THE DRAWING AS A WHOLE.

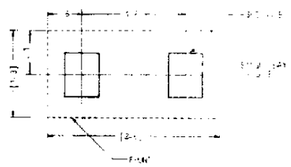

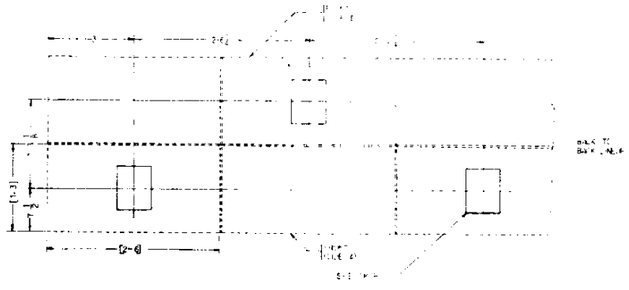

TYPICAL FLOOR PLAN LAYOUT OF RESTRAINER

SK A

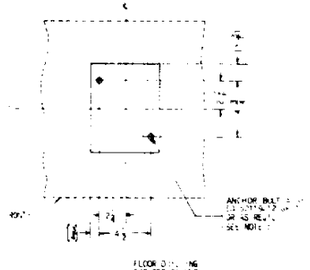

FLOOR DRILLING FOR RESTRAINER

SK B

ED-82305-10

POWER SYSTEMS
SHOCK ISOLATION SYSTEM
TYPICAL CABINET LINEUP
ASSEMBLY AND STOCKLIST
SHOCK MOUNT-VARIABLE STIFFNESS
FOR AC SWITCHBOARD
IN HARDENED OFFICE

WESTINGHOUSE ELECTRIC CORPORATION

125

A T & T CO RATING
A T & T CO STANDARD
W E CO RATING
STANDARD

ED 82305-10
2 SHEETS SHEET 2

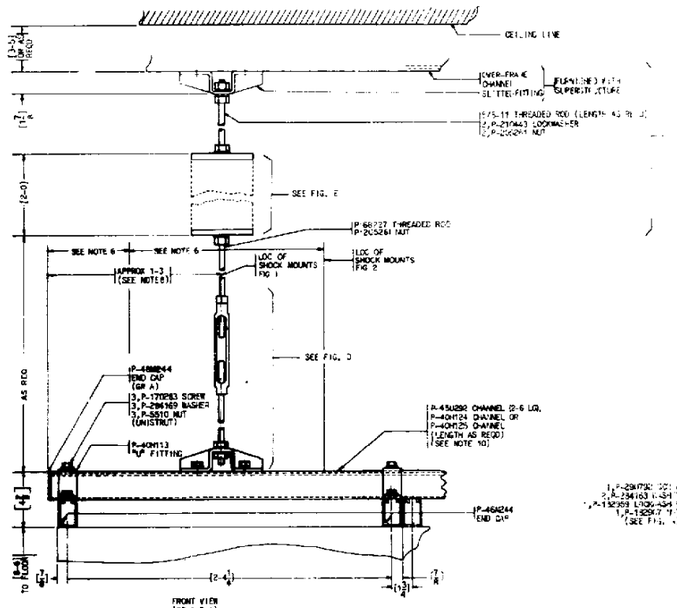

FRONT VIEW
(GR 1,2,A)
FIG. 1 & 2

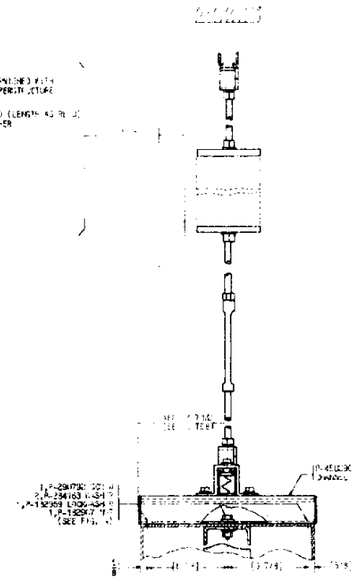

END VIEW
FIG. 1

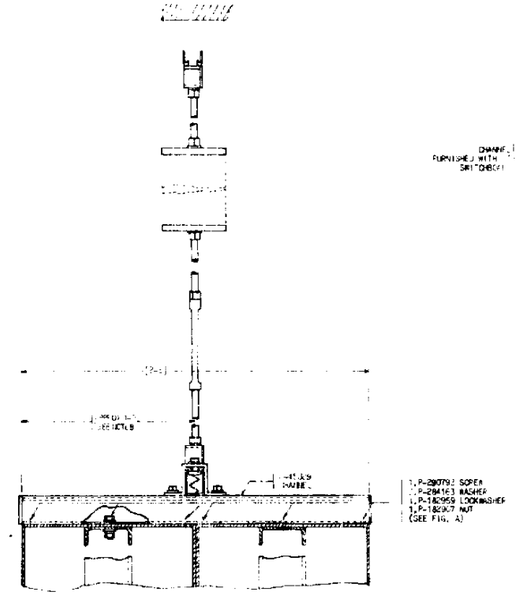

FIG. 2

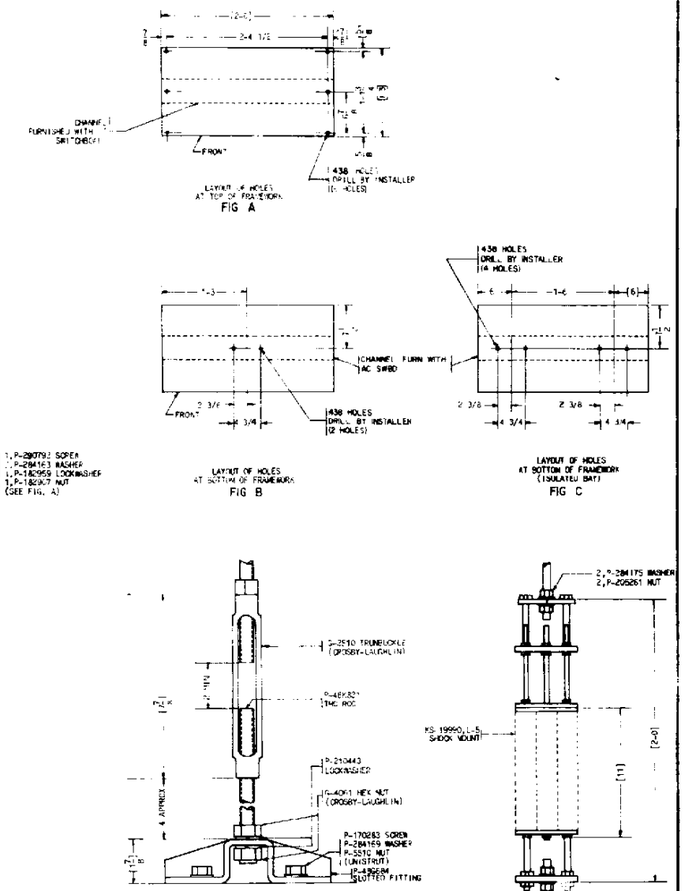

FIG A

FIG B

FIG C

FIG D

SHOCK MOUNT ASSEMBLY
FIG. E

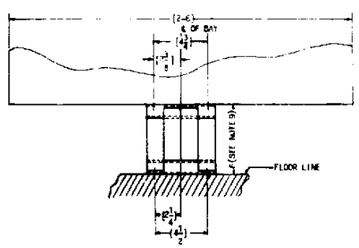

(GR 3)
FIG. 3

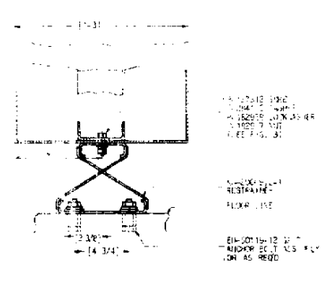

END VIEW

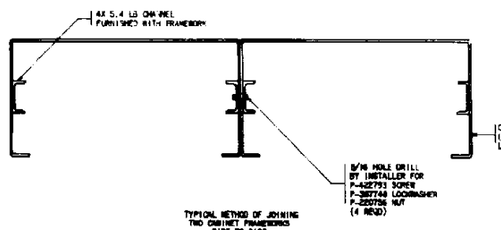

TYPICAL METHOD OF JOINING
TWO CABINET FRAMEWORKS
SIDE TO SIDE
(GR B)
FIG. 4

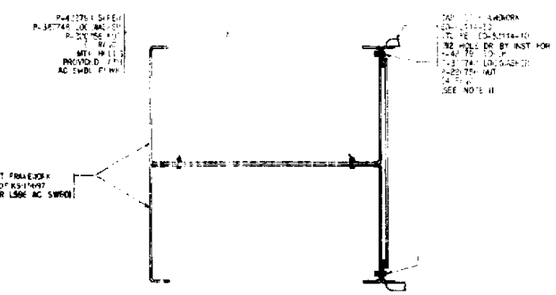

TYPICAL METHOD OF JOINING
DISSIMILAR CABINET FRAMEWORKS
SIDE TO SIDE
(GR B)
FIG. 5

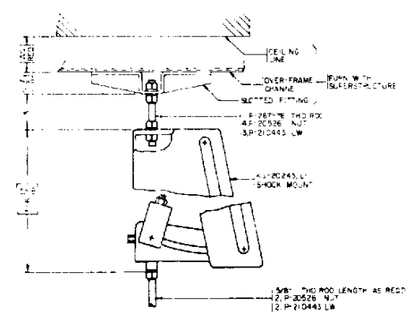

(GR C,3)
FIG. F

ED-82305-10 PORIZ SYSTEM SHOCK ISOLATION SYSTEM TYPICAL CABINET LINEUP ASSEMBLY & STOCKLIST SHOCK MOUNT-VARIABLE LOAD FOR AC SWITCHBOARD (KS-15697) IN HARDENED AREA WESTERN ELECTRIC COMPANY INC	ED-82305-10 SHEET 2

ED-82306-10