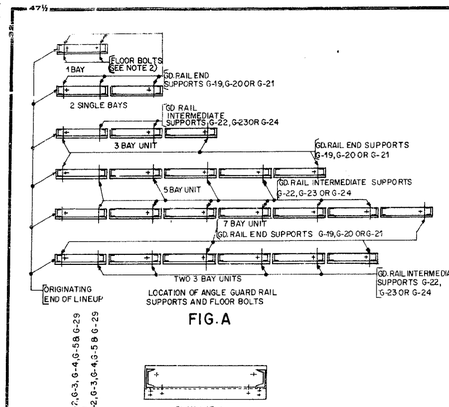

FIG.A

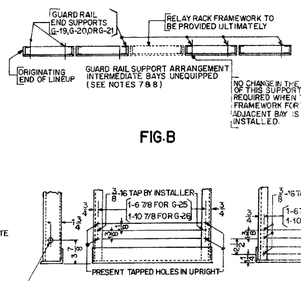

FIG.B

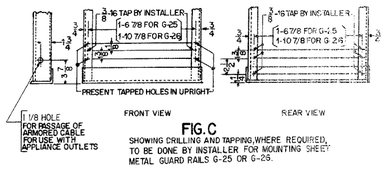

FIG.C

SHOWING DRILLING AND TAPPING, WHERE REQUIRED, TO BE DONE BY INSTALLER FOR MOUNTING SHEET METAL GUARD RAILS G-25 OR G-26.

ENGINEERING NOTES (CONT'D)

(IN ADDITIONS TO SUCH LINEUPS, ORDER 1 G-19, G-20 OR G-21 FOR EACH UNIT AND 1 G-22,G-23 OR G-24 FOR EACH BAY, LESS THE NUMBER OF UNITS IN THE ADDITION. WHERE ONE OR MORE BAYS ARE OMITTED BETWEEN INITIALLY EQUIPPED BAYS, CONSIDER THE EQUIPPED BAYS AS SEPARATE LINEUPS AND FURNISH GUARD RAIL SUPPORTS ACCORDINGLY.

WHEN PARTIALLY EQUIPPING A RESERVED GAP IN A LINEUP, ORDER GUARD RAIL SUPPORTS IN ACCORDANCE WITH FORMULA FOR ADDITIONS. WHEN FULLY EQUIPPING A RESERVED GAP IN A LINEUP, ORDER GUARD RAIL SUPPORTS IN ACCORDANCE WITH FORMULA FOR ADDITIONS EXCEPT OMIT 1 G-19,20 OR 21 FOR THE LAST BAY BEING ADDED.

64. ORDER CABLE BRACKET PER ED-90674-70 G-NO. AS REQ'D
65. WHEN FURNISHING RELAY RACKS PER THIS DRAWING FOR
MFR. FOUR WIRE VOICE FREQUENCY BAYS, MODIFY SAME PER
DISC ED-61594-70 SK. A. ALSO FURNISH AS REQUIRED END GUARDS & CA. BRACKETS PER ED-61594-70, & GUARD RAILS & JUNCTION MATERIAL BETWEEN BAYS PER ED-61465-51.
66. ORDER TERM LUG PER ED-90484-72 (COMMON SYS) WHEN REQ'D.
67. PROVIDE FUSE GUARD PER ED-90335-70 WHEN BAY IS EQUIPPED WITH FUSE OR LAMP PANELS LOCATED 4'-3" OR LESS FROM FLOOR.
68. FOR EACH ISOLATED BAY FURNISH ONE ANCHOR BOLT ASSEM. G-3 PER H-555-120 IN ADDITION TO THOSE IN STOCKLIST.

ENGINEERING NOTES

51. MADE FROM ED-90679-01 ISSUE 2).
52. END GUARDS ED-90938-70 FOR BAYS EQPD WITH 1-0 ANGLE GUARD RAILS ED-91659-70 FOR 11-6 BAYS EQPD 1-0 SHEET METAL GUARD RAILS END GUARDS ED-90670-71 FOR 11-6 BAYS EQPT WITH 1-3 OR 1-8 ANGLE GD RAILS. END GUARDS ED-64356-30 FOR TOLL TEST BOARD BAYS.
53. ALARM EQUIPMENT AND DISTRIBUTING POWER TERMINAL STRIP SUPPORTS ED-30006-10 (S.X.S. SYSTEM) (A & M ONLY)
54. PROVIDE ONE SET OF ANGLE GUARD RAILS AND PIPE DETAILS PER G15 OR G16, AS REQUIRED FOR CLOSING THE SPACE OF ANY SINGLE UNEQUIPPED BAYS HAVING ANGLE GUARD RAILS WITHIN A LINEUP.
55. PROVIDE ONE SET OF CLOSING DETAILS PER ED-91804-70 AS REQUIRED, FOR CLOSING THE SPACE OF ANY SINGLE UNEQUIPPED BAY BETWEEN BAYS HAVING SHEET METAL GUARD RAILS.
56. TERMINAL STRIP SUPPORT ASSEMBLY ED-90458-50 (COMMON SYSTEMS)
57. FUSE PANEL ADAPTERS ED-90335-70 (COMMON SYSTEMS)
58. BUS BAR CONNECTIONS AND METHOD OF MOUNTING POWER FEEDERS ED-50193-12 (S.X.S. SYSTEM) (A & M ONLY)
59. APP. UNIT FOR S.O. EQUIPMENT T-590200 (S.X.S. SYSTEM)
60. KEY AND LAMP PANEL T-590243 (S.X.S. SYSTEM)
61. KEY AND LAMP PANEL H-908-115 (S.X.S. SYS. COMMUNITY DIAL OFFICES)
62. APP. MTG. BOARD H-909-366 49 TYPE REPEATING COILS LOCAL TEST DESK HOWLER CKT.(S.X. SYSTEM).
63. ANGLE GUARD RAILS ARE PROVIDED IN LENGTHS TO ACCOMMODATE UNITS OF 1,3,5,& 7 BAYS OF RELAY RACK, GUARD RAIL SUPPORTS SHALL BE ORDERED IN ACCORDANCE WITH THE FOLLOWING FORMULA:

FOR EACH NEW LINEUP CONSISTING OF ONE OR MORE UNITS, AND REQUIRING OPEN ANGLE GUARD RAILS, ORDER AS MANY END GUARD RAIL SUPPORTS G-19,G-20 OR G-21 AS THERE ARE UNITS IN THE LINEUP, PLUS ORDER AS MANY INTERMEDIATE GUARD RAIL SUPPORTS G-22,G-23 OR G-24 AS THERE ARE BAYS IN THE LINEUP, LESS THE NUMBER OF UNITS.

(CONT'D)

PARTS TO BE WELDED	SHOP	INST.
P-421865		
P-421866		
P-404524	X	
P-404488		
P-406941		
P-406942	X	
P-258050	X	
P-258051	X	
P-404503	X	
P-404504		
P-426896		
P-426897		
P-408399		
P-408400		
P-476932		
P-476933		

MANUFACTURING NOTES (CONT'D)

SECT. A-A. COVER PLATE P-450389 SHALL BE MODIFIED ON INSTALLATION AS REQUIRED TO ALLOW FOR THIS EXTRA WEB THICKNESS.

12. UPRIGHTS TO BE TAPPED PER FIG. C FOR MOUNTING SHEET METAL GUARD RAILS ON RELAY RACK ON INSTALLATION.
13. P-428403 LEVELING SCREWS SHALL BE LEFT IN PLACE ON INSTALLATION.
14. TWO GUARD RAIL SUPPORTS ARE REQUIRED IN THE ORIGINAL BAY & ONE AT THE GROWING END OF EACH SUPPLEMENTARY BAY.
15. IN THE ORIGINATING BAY OF A LINEUP CONSISTING OF TWO OR MORE BAYS THE ANCHOR BOLT SHALL BE INSTALLED IN THE FLOOR BOLT HOLE CLOSEST TO THE ORIGINATING END OF THE LINEUP. IN EACH SUPPLEMENTARY BAY THE ANCHOR BOLT SHALL BE INSTALLED IN THE HOLE CLOSEST TO THE GROWING END OF THE LINEUP.

MANUFACTURING NOTES

SHOP	INST.	
		1. IN STOCK LIST: ITEMS NOT MARKED TO BE ASSEMBLED FOR SHIPMENT, *S* ITEMS NOT ASSEMBLED, SHIPPED SEPARATELY *SH* ITEMS TO BE ASSEMBLED FOR SHIPMENT FOR SHOP EQUIPPED BAYS, BUT TO BECOME *S* OR *SSH* ITEMS WHEN EQUIPMENT IS TO BE MOUNTED ON INSTALLATION *SS* = MISC. ITEMS REQ. FOR INSTALLATION
X		2. TWO FLOOR BOLTS SHALL BE USED TO FASTEN ISOLATED BAY FLOOR ANGLES AND ONE BOLT PER BAY IN LINES OF BAYS LOCATED AS SHOWN IN FIG. A (SEE NOTE 15).
X		3. 11/32 END GUARD MOUNTING HOLES SHALL BE PROVIDED IN WEB OF CHANNEL UPRIGHT ON INSTALLATION WHEN OLD TYPE END GUARDS ARE REUSED ON THIS RACK.
X		4. 11/32 JUNCTION HOLES SHALL BE PROVIDED ON INSTALLATION WHEN G1,G2,G3,G4,G5,G-6,G-28 & G-29 IS ADDED IN LINEUP ADJACENT TO CHANNEL RELAY RACK HAVING JUNCTION HOLES SPACED OTHER THAN SHOWN IN TABLE OF DIMENSIONS.
X		5. 29x24 NC-28 HOLES SHALL BE PROVIDED IN 8'-8" RELAY RACKS ON INSTALLATION WHEN NECESSARY TO LOCATE CABLE DROP SUPPORT 6 1/8" INSTEAD OF 4 1/8 FROM TOP OF RACK.
X		6. PARTS SPECIFIED OF OUTSIDE MANUFACTURE OR THEIR APPROVED EQUIVALENTS SHALL BE USED.
X		7. INITIALLY EQUIPPED BAYS SEPARATED BY FUTURE BAYS IN THE SAME LINE-UP SHALL BE CONSIDERED AS SEPARATE LINE-UPS.
X		8. ARRANGE GUARD RAIL SUPPORTS PER FIG. B IN LINEUP HAVING UNEQUIPPED BAYS BETWEEN INITIALLY EQUIPPED BAYS
X		9. WELDING PER SPEC. 51068.
X	1Q	FRAME TO HAVE A 395-4 OR 525-A (.0004) FINISH AFTER WELDING.
X	1T.	ON BAYS WITH SUBSTITUTE UPRIGHTS HAVING A WEB THICKNESS OF 1/4 OR 3/8, THE INSTALLER SHALL PROCURE LOCALLY OR REQUISITION 5/16-18 X 1 1/4 HH CAP SCREWS P-160126 SCREWS SHOWN IN (CONT'D)

ORIGINAL ISSUE	6-8-71
210229-B	212051-C
210411-B	212426-B
210520-B	213123-B
211257-C	213701-B
211524-B	375760-B1
211824-A	376801-B1
DWG REDRAWN DUE TO POOR CONDITION OF TRACING. 10-9-69	CL.D
R.A.B. R.W.B.	47
IN TBL OF DIM. GR 3 COL C 1-8 3/8 READ 1-9 3/8. 4-27-71	377390-01
D.J.T. NMC E.P.M.	48
IN FIG. C DRILL POS READ 3 7/8 RESP. E HOLE WAS DRILLED BY INSTALLER. 8-2-72	377658-B1
C.A. R.W.B.	49
IN NOTE 52 "END GUARDS ED-64356-30 FOR TOLL TEST BOARD BAY ADDED 1-26-73	A T & T CO NONE WE CO CL B
R.C. W.W. R.W.B.	50
IN SL LINES 53 & 54 NON-STD FASTENERS WERE SPECIFIED. 8-21-75	TSRW 0021-B1C
W.S.M. R.W.B.	51

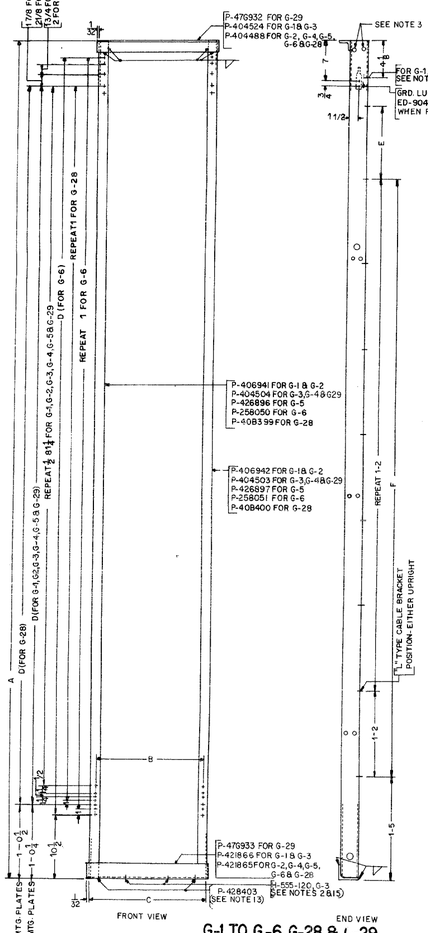

G-1 TO G-6, G-28 & G-29

G-25 & G-26

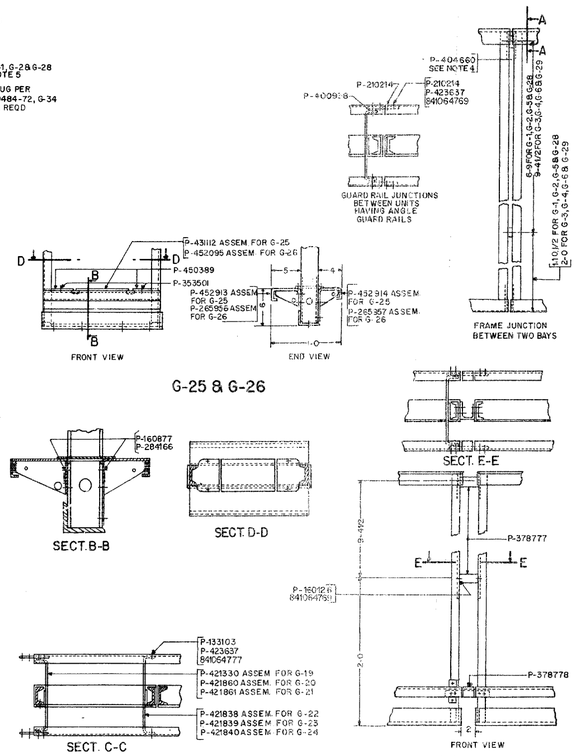

G-27

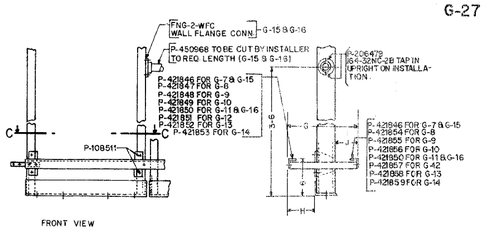

G-7 TO G-16 & G-19 TO G-24

TABLE OF DIMENSIONS								
GROUP	NO. OF 1 3/4" MTG PLTS	NO. OF 2" MTG PLTS	A	B	C	D	E	F
G-1	48	-	8-8	1-6 3/8	1-8 3/8	6-11 1/2	10	5-10
G-2	48	-	8-8	1-10 7/8	2-0 1/2	6-11 1/2	10	5-10
G-3	68	-	11-6	1-6 3/8	1-8 3/8	9-10 1/2	1-0	8-2
G-4	68	-	11-6	1-10 7/8	2-0 1/2	9-10 1/2	1-0	8-2
G-5	50	-	9-0	1-10 7/8	2 0 5	7-3	-	7-0
G-6	-	62	11-6	1-10 7/8	2-0 1/2	10-3	1-0	8-2
G-28	-	42	8-8	1-0 3/4	2-0 1/2	6-11	10	5-10

TABLE OF DIMENSIONS (CONTINUED)									
GROUP	NO. OF 1 3/4" MTG. PLTS	NO. OF 2" MTG. PLTS	A	B	C	D	E	F
G-29	68	-	11-6	2-5 15/16	2-7 7/8	9-10 1/2	1-0	8-2

ANGLE GUARD RAIL DIMENSIONS		
G	H	J
1-0	4 5/8	4
1-3	5 3/8	6
1-8	6 1/8	10 1/2

ED-90672-70

| | | | | | | | | |