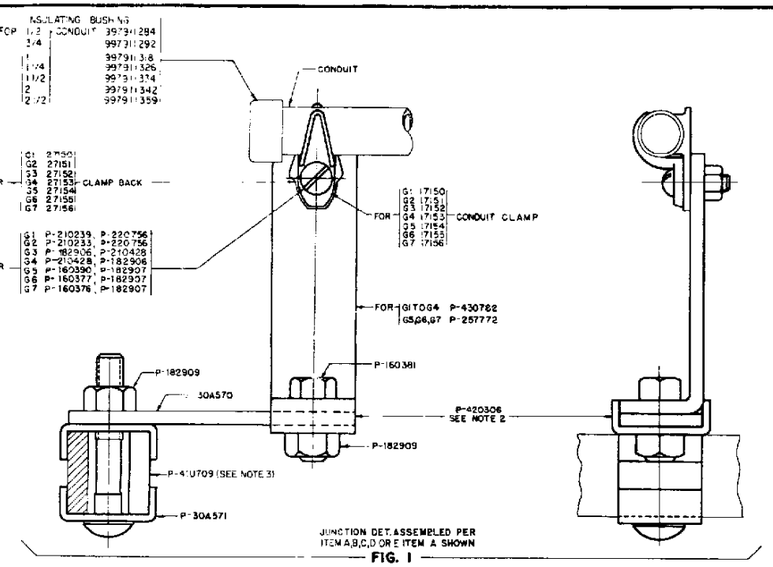

FIG. 1

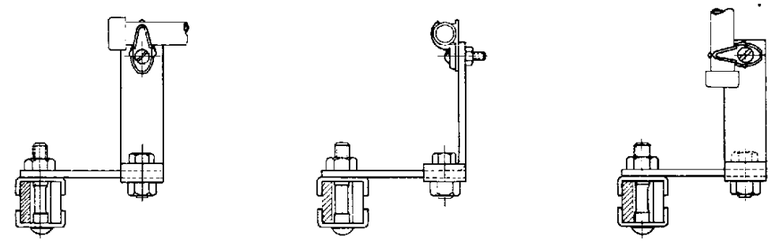

CONDUIT AT RIGHT ANGLES TO CABLE RACK

ITEM A

CONDUIT PARALLEL TO CABLE RACK

ITEM B

CONDUIT COMING FROM ABOVE CABLE RACK

ITEM C

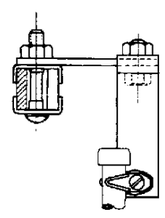

CONDUIT COMING FROM BELOW CABLE RACK

ITEM D

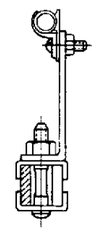

CONDUIT PARALLEL TO CABLE RACK

ITEM E

ENGINEERING NOTES (CONTINUATION)

54-ENGINEER SHALL ORDER CONDUIT PER KS-5359 TOGETHER WITH ASSOCIATED FITTINGS, COUPLINGS AND SUPPORTS ON A JOB BASIS.

SHOP INST.

MANUFACTURING NOTES

1 ALL PARTS SHALL BE SHIPPED SEPARATE. ☒ MISC ITEMS REQUIRED FOR INSTALLATION.

X 2. P-420306, CLIP SHALL BE FORCED ON OVER P-30A570, BAR ASSEMBLY IF NECESSARY.

X 3-SPACER P-41U709 (1 1/2 X 2 X 3/8) SHALL BE MOUNTED TO SUIT 1 1/2 OR 2 STRINGER.

6-2-81 1

NOTE 3 READ "INST SHALL CUT THE 1 1/4 X 3/8 X 1 1/2 LG. OUT THE 1 1/2 X 3/8 X 2 LG. BAR AS REQD FROM MAT'L ON HAND" IN S.L. LINES 42, 43 & 44 & 45, P.182906, P.182907, P.182947 & P.182997 READ P.182907, P.154248, P.160376, P.125614 & P.125615 ON LINE 36, P.160376 READ P.160377, QUAN. 1 WAS SHOWN FOR G-5 ON LINE 33 P.210428 READ P.182828, ON LINE 32, P.210233 READ P.210232, QUAN. 1 WAS SHOWN FOR G-1, ON LINE 31 QUAN. 1 WAS SHOWN FOR G-2 & 3, ON LINE 30 QUAN. 1 WAS SHOWN FOR G-7, ON LINE 29 QUAN. 1 WAS SHOWN FOR G-7. LINE 6, 6, 28 ADDED. VIEWS CHKD ACCORD. L.T.-6Z CA657127-D

2

NOTE 3 ADDED. 7-12-84 CA 958844-D

3

IN S.L. G-3 LINE 28 RNO B READ 1, P-210200 R.H.M. SCR. 1/4-20X1 1/4, X. LINE 42 QUAN. RNO READ 1. LINES 33 & 43 QUAN 1 ADDED RESP. VIEWS CHKD ACCORD. 10-19-88 CL D

4

NOTE 54 ADDED. 3-14-73 CL D

5

IN SL LINES 46 THRU 52 ADDED, FIG 1 CHKD ACCORD. IN NOTE 54 REF TO "FITTINGS, COUPLINGS ETC" READ "FITTINGS, BUSHINGS COUPLINGS ETC." 2-[illegible]-89 CL D

6

ITEM E ADDED. 2-16-81 CL D

7

								997911359	2 1/2-KS-5359 INSULATING BUSHING PET TYPE				
	1							997911342	2				
		1						997911334	1 1/2			50	
			1					997911326	1 1/4				
				1				997911318	1				
					1			997911292	3/4				
						1		997911284	1/2				
2	2	2	2	2	2	2		P-182909	1/2-13			45	
1	1	1						P-182907	HEX NUT 3/8-16				
			1	1				P-182906	5/16-18				
					1	1		P-220756	1/4-20				
												40	
1	1	1	1	1	1	1		P-160381	HEX. HD. CP. SCR. 1/2-13X1 1/8				
1								P-160376	3/8-16X1 3/4			35	
			1	1				P-210428	5/16-18X1 1/4				
						1		P-210233	R.H.M. SCR. 1/4-20X1 1/4				
							1	P-210239	1/4-20 X 1				
		1						P-160390	3/8-16 X 1 3/8			30	
	1							P-160377	3/8-16 X 1 1/2				
1								27156				25	
	1							27155					
		1						27154					
			1					27153	GLAMP BACKS-APPLETON ELECTRIC CO				
				1				27152	OR APPROVED EQUIVALENT				
					1			27151				20	
						1		27150					
1								17156	2 1/2			15	
	1							17155	2				
		1						17154	1 1/2				
			1					17153	1 1/4 - ONE HOLE CONDUIT CLAMP				
				1				17152	1 MALLEABLE IRON, CADMIUM				
					1			17151	3/4 APPLETON ELECTRIC CO.			10	
						1		17150	1/2 OR APPROVED EQUIVALENT				
1	1	1	1	1	1	1	1	P-41U709	SPACER				
1	1	1						P-257772	CONDUIT SUPPORT			5	
			1	1	1	1	1	P-430782					
1	1	1	1	1	1	1	1	P-30A570	BAR ASSEMBLY				
1	1	1	1	1	1	1	1	P-420306	CLIP				
1	1	1	1	1	1	1	1	P-30A571	"T" BOLT ASSEMBLY			1	
G7	G6	G5	G4	G3	G2	G1		CODE	DESCRIPTION			NOTE	LINE

2 1/2 CONDUIT	2 CONDUIT	1 1/4 CONDUIT	1 1/4 CONDUIT	1 CONDUIT	3/4 CONDUIT	1/2 CONDUIT

NOTICE
NOT FOR USE OR DISCLOSURE OUTSIDE THE BELL SYSTEM EXCEPT UNDER WRITTEN AGREEMENT

ENGINEERING NOTES

51. THIS DRAWING AGREES WITH ISSUE 1, ED-90977-01 9

52. FOR CONDUIT CONSTRUCTION AND ARRANGEMENT OF CONDUIT FITTINGS AT DESKS, CABINETS, ETC., SEE N-253-129.

53. SPECIFY ED-90977-72 FIG. 1 ON THE JOB CABLING PLAN WHERE APPLICABLE.

(CONTINUED)

ONE CONDUIT SUPPORT FOR CONDUIT ATTACHED TO CABLE RACK PER FIG 1 AND ITEMS A,B,C OR D

ED-90977-72 4N99

COMMON SYSTEMS
METHODS OF TERMINATING CONDUIT CARRYING SWBD. CABLE AT CABLE RACK

WESTERN ELECTRIC COMPANY, INC.

STANDARD

R

ED-90977-72

ED-90977-72