GUYING

INSTALLING GUYS

EYE BOLT METHOD

NOTES CONCERNING THIS ADDENDUM

This addendum supplements Section G23.150. It includes the local clearance requirements for guys attached to poles by grounded through bolts. It also includes information regarding the L Guy Strap and the C Guy Shield and methods of placing shields in order to give more protection to guys. It has been reissued primarily to supplement the instructions on serving guys, to provide for the use of the local standard wooden guy guard, and to include a method of spacing adjacent guys to obtain the required clearance.

The cross-reference, "See Addendum," should be marked in Section G23.150 at Paragraphs 1.01, 3.01, 4.01, 5.01, 6.01, 8.01, 11.03, 13.01 and 13.02 (a), (b) and (c) to indicate the addition of supplementary and new instructions.

1. SIZE OF EYE BOLTS AND WASHERS

1.01 Substitute L Guy Strap for the B Guy Strap given in the table for a 25,000-pound anchor guy.

3. USE OF GUY STRAPS

3.01 Use L Guy Straps with 25,000-pound anchor guys and S Guy Straps with all other anchor guys larger than 6,000-pound strand. Attach the straps as shown in Paragraph 5.01.

Copyright, 1942, by the
Southern California Telephone Company

4. SERVING ENDS OF GUYS

4.01 Secure end of tail of guy by means of 083 steel tie wire for 2,200-pound strand and 109 steel construction wire for all larger sizes of strand.

NOTE: If desired, the tails of 2,200 and 6,000-pound guys can be served by one wire of the strand.

5. ATTACHING GUYS TO POLES AND STUBS

5.01(1) 16,000-pound Guys and smaller.
(Change Note below drawing to read:)
NOTE: If the eye bolt is located within 16 inches of the top of the pole, the S guy strap should be attached by means of a 5/8-inch crossarm bolt. Place head of bolt against guy strap.

(2) Install 25,000-pound guys as follows:

(a) Cut a gain 7 inches long to a depth of 3/4 inch in the pole, so that the base of the strap will be supported on a square shoulder of timber, as shown in the following figure.

(b) Place the L Guy Strap in the gain with the turned over base toward the pole and resting on the shoulder of the gain.

(c) Where the upper edge of the strap is located more than 16 inches from the top of the pole, secure the strap to the pole with two 1/2-inch by 4-1/2-inch Drive Screws.

(d) Where the upper edge of the strap is located 16 inches or less from the top of the pole, secure the strap to the pole with a 5/8-inch Crossarm Bolt, placed so that the head of the bolt is against the guy strap.

(e) Place a 1-inch Bent Thimble Eye Bolt and attach 25,000-pound guy as shown in the following.

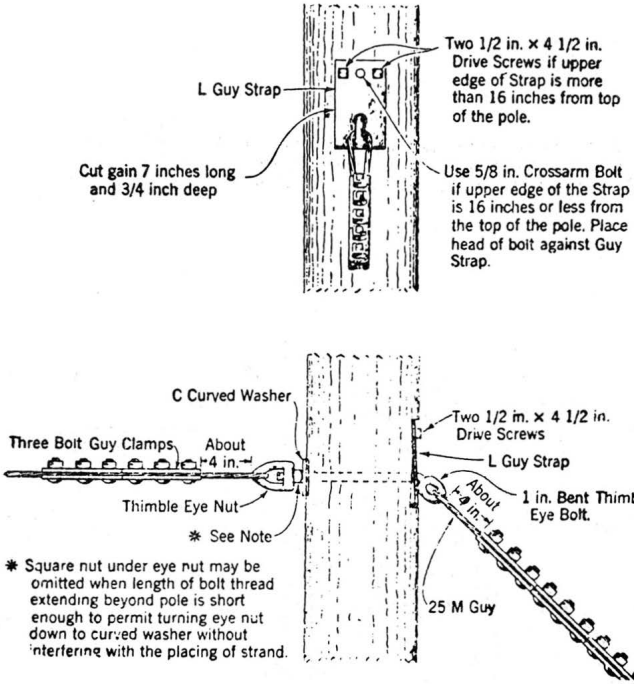

6. ATTACHING GUY TO ROD

6.01 The drawings on Page 6, Section G23.150, shall be changed as follows:

NOTE 1: Where Galv. Wire is specified for a guy, this wire should be 203 Steel Construction Wire.

NOTE 2: The reference to * should read: "Approximately 12 in. for all guys attached to guy rods."

NOTE 3: The reference to "5 wraps 109 Galv. B.B. Wire" should read: "5 wraps 083 Steel Tie Wire for 2,200-pound guy and 5 wraps 109 Steel Construction Wire for larger sizes of guys."

INSTALLING GUYS
EYE BOLT METHOD

8. POSITION OF GUYS IN AERIAL CABLE LINES

8.01 Place strain insulators in all guys in accordance with Section G23.140-P. On jointly used poles, where the suspension strand is less than 6 feet from the supply conductors, provide a four-inch electrical separation between guys and suspension strand, wherever practicable. Where guys are attached to a grounded cable messenger, the clearances as specified in the following illustrations and notes must be maintained.

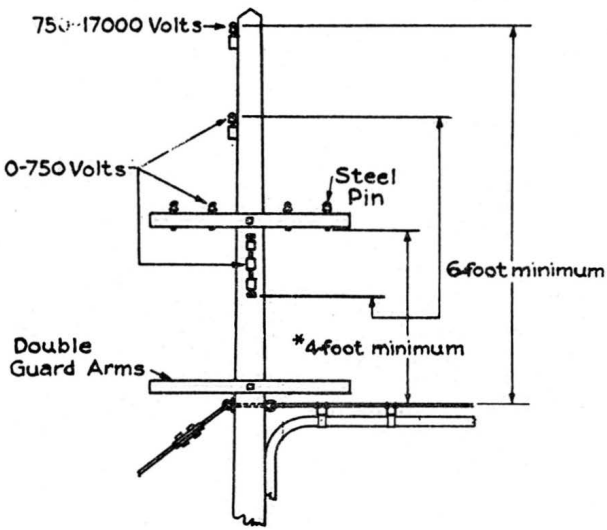

NOTE:
*Double Guard Arms may be omitted if separation of 6 feet, or more, can be maintained between cable messenger and supply conductors or secondary distribution racks.

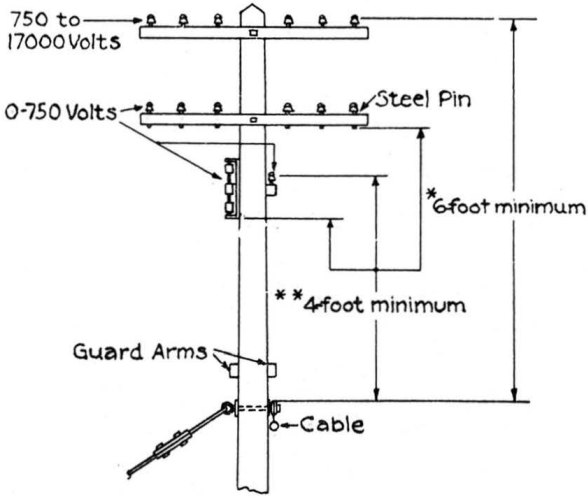

NOTES:

*(a) A separation of not less than 6 feet shall be maintained between a cable messenger and supply conductors carrying more than 750 volts, on poles where a guy is attached to a cable suspension bolt.

**(b) Both Guard Arms may be omitted if separation of 6 feet, or more, can be maintained between cable messenger and supply conductors or secondary distribution racks.

(c) Omit Guard Arm on side of pole opposite to cable if a 4-inch separation can be maintained between guy and cable suspension bolt. (See G23.140P.)

INSTALLING GUYS
EYE BOLT METHOD

11. PULL UP ANCHOR GUYS AS SHOWN

11.02 and 11.03 NOTE: The note reference to the tail of the guy as given in the drawings in Paragraphs 11.02 and 11.03, Section G23.150, should be changed to read: "Approx. 1 ft. for all guys attached to guy rods."

11.03 When using the chain hoist for pulling up anchor guys, the position of the tool should preferably be that shown in Part 3 of Section G82.440 on the "Operation of the Chain Hoist."

13. INSTALLING GUY PROTECTORS

13.01(a) The methods described in the following paragraphs provide for adequately guarding every guy that is exposed to vehicular or pedestrian traffic. In some cases, where two or more guys are attached to the same pole, an individual shield will be required for each guy. In other cases, guys will be found with sufficiently low tensions and separations such as to enable them to be drawn together and the group protected by a single shield. Guys of different ownership may be grouped in this manner, if such grouping is practicable and is agreeable to the utility affected. The Appendix to Section G23.145 carries a list of utilities that have approved this plan. The list will be retained until such time as full agreement has been reached by all utilities involved.

Where it is found, during inspection or when working on joint poles, that guys belonging to other users are not adequately protected and cannot be protected by grouping, a report should be made to the Plant Engineer regarding the case. This report shall be forwarded by the Plant Engineer to the owner of the guys in question under the established routine for handling joint pole problems.

(b) The California requirements specify a minimum distance of three inches between a guy and the surface of a strain insulator in an adjacent guy. Individual shields, therefore, would be required for each guy if this distance could not be maintained after drawing two or more guys together.

13.02 When guys are exposed to heavy vehicular traffic, Type C Guy Shields should be used for replacements and for new installations. Type B Guy Shields or other approved guards will be adequate where the guy to be protected is exposed to light or pedestrian traffic only.

(a) Install the guy shields as follows:

B Guy Shield

(1) With the shield at an angle of about 30° with the guy strand, fasten the hook at the lower end of the guy shield around the guy rod, as shown in the figure on the next page.

(2) Press the shield down to the guy strand and place the bolt for the lower clamping device in the hole above the eye of the strand at the guy rod. Place washer and tighten nut.

(3) Secure the upper clamping device with the clamping plate turned to the position indicated for the size of strand.

B GUY SHIELD

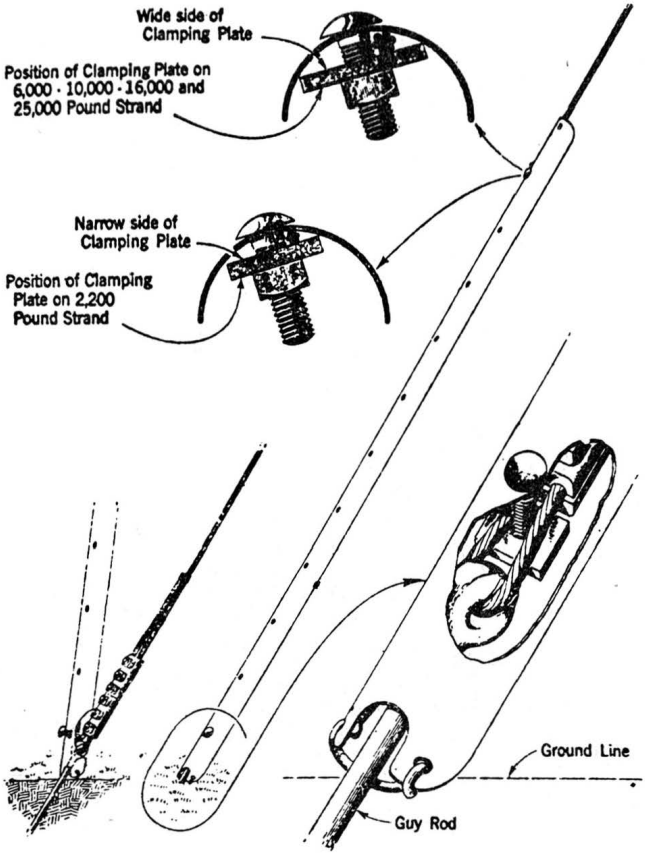

C Guy Shield

(1) Place the lower end of the guy shield under the guy rod and fasten the hook over the rod as shown below.

(2) Rotate guy shield around the rod and place the shield over the guy strand.

(3) Slide the lower clamping device to a point over the eye of the guy strand at the guy rod, place bolt of the clamping device through the eye, place washer and tighten nut.

(4) Secure the upper clamping device as shown.

C GUY SHIELD

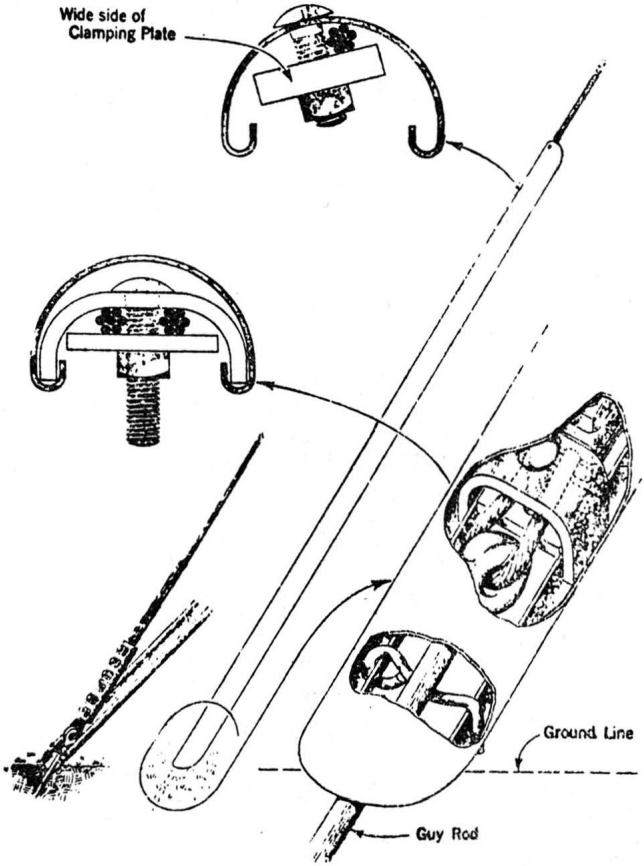

(b) Where appearance will permit and the guys will not be exposed to heavy vehicular traffic, wooden guy guards (Dwg. L-3764) or old crossarms not less than 8 feet long may be used. Attach the guards to the guy strand by means of the two J bolts with which they are equipped. If old crossarms are used, they may be attached in the same manner with two 4-1/8-inch J bolts or lashed in place with 109 steel construction wire. They should preferably be painted white.

(c) Installing Protection for Guys on Communication Poles

Two or more guys attached to the same rod:

(1) Where the tension is sufficiently low and the distance between the guys at the top of the guy shield is less than 18 inches, a rope shall be passed around the guys to draw them together in the manner shown below, after which they shall be clamped together by means of a three-bolt guy clamp near the top of the guy shield. This clamp should be protected by the guy shield if such protection is practicable and does not interfere with the tightening of the bolts on the clamp or shield.

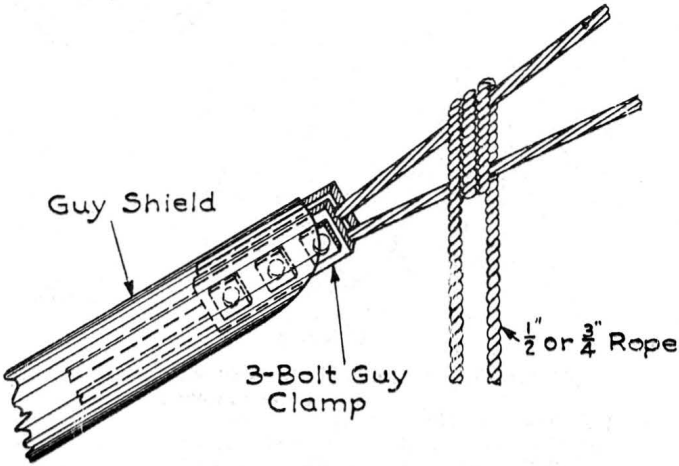

The following drawings show typical cases where this method of protection may be obtained.

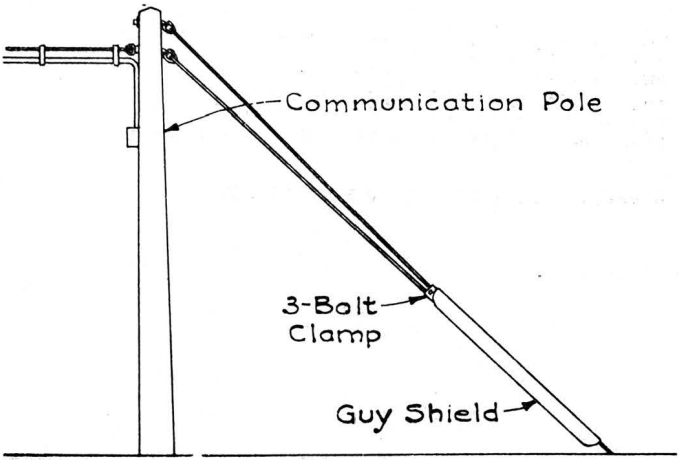

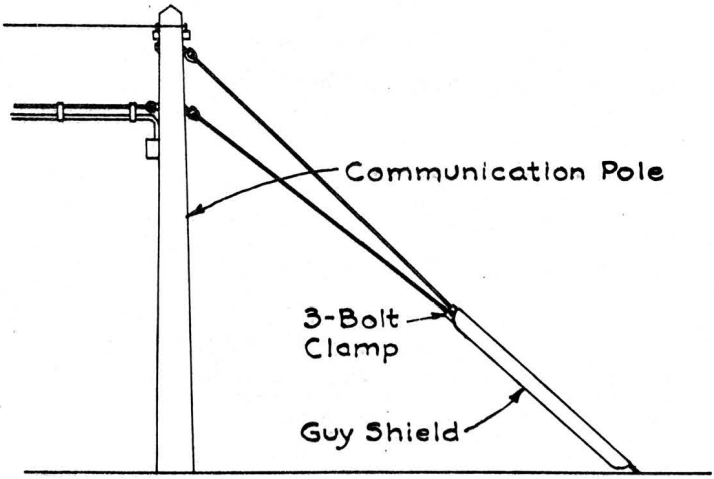

INSTALLING GUYS
EYE BOLT METHOD

(2) Where the tension in the guys or the separation between the guys at the top of the guy shield is too great to allow the guys to be pulled together by means of the looped rope, an individual guy shield shall be placed over each guy. Blocks, or similar devices, shall never be used for drawing the guys together. The following illustration shows a typical case where individual shields will be required.

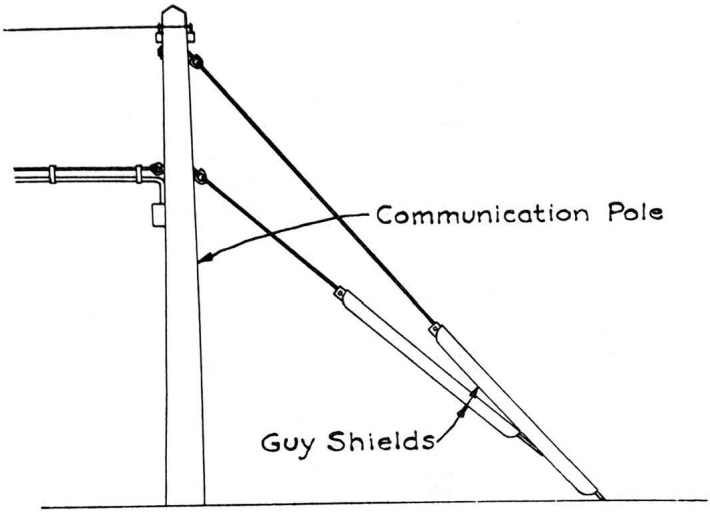

Two or more guys attached to separate rods:

Individual guy shields will be required in most cases where two or more guys are attached to separate rods, as it will not be practicable to group such guys unless the eyes of the different rods are very close together. This condition is illustrated below.

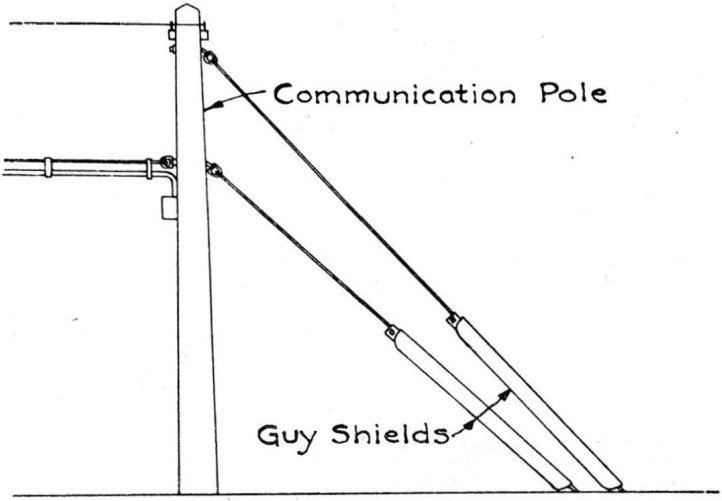

13.02(d) <u>Installing Protection for Guys on Jointly Used Poles</u>

<u>Two or more guys attached to the same rod:</u>

(1) Where the tension is sufficiently low and the separation between the guys at the top of the guy shield is less than 18 inches, the protection of guys on joint poles may be obtained by drawing and clamping the guys together in the manner described in Paragraph 13.02(c) for guys on communication poles, if the three-inch separation between strain insulators and guys can be obtained. See Paragraph 13.01(b).

INSTALLING GUYS
EYE BOLT METHOD

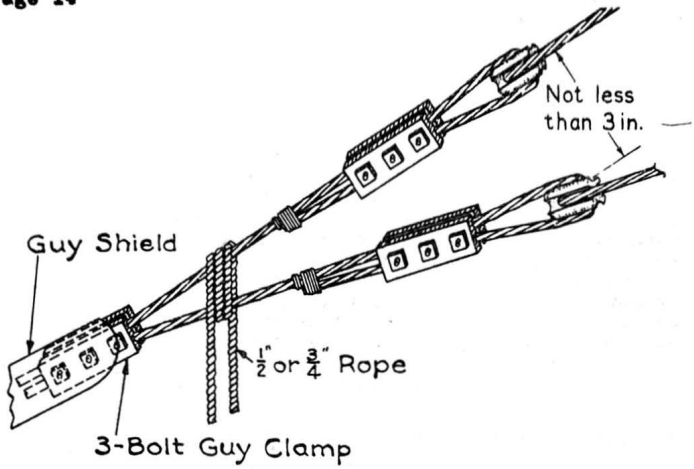

The figure shown below is representative of the cases where it will be found practicable to group guys of different ownership under a single guard.

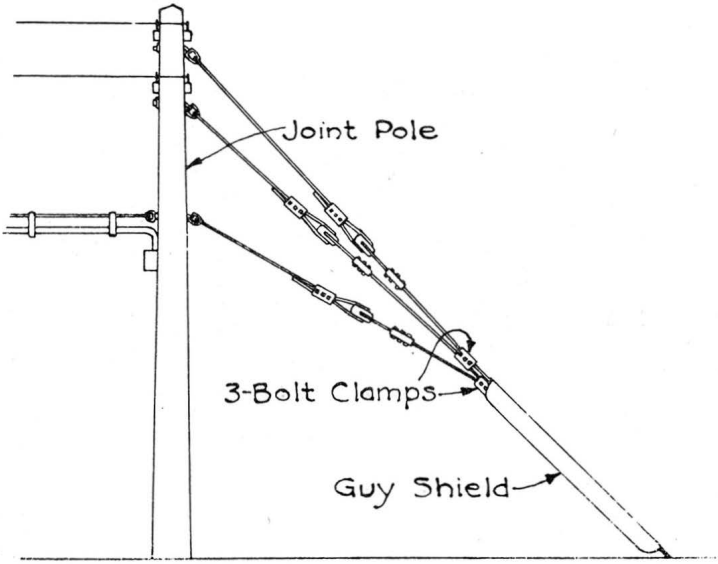

Where guys are being clamped together for protection by a single shield, as illustrated above, a shield previously in place may be used to protect the group of guys if it is in good condition. The use of the round or square box guards that may be found in some locations is permissible if such shields are in good condition. The following illustration shows how guys may be grouped when wooden guards are employed.

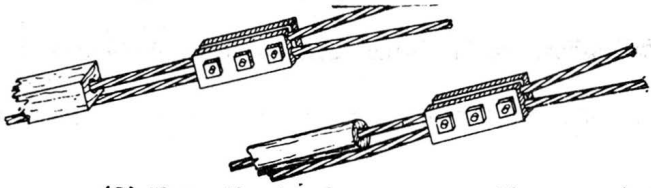

(2) Where the tensions or separations are too great to make the grouping of the guys practicable, an individual shield shall be placed over the telephone guy. In some cases, two telephone guys may be placed under one shield with the guys in the upper positions carrying their own protection, as shown in drawing below. Blocks, or similar devices, shall never be used to draw the guys together.

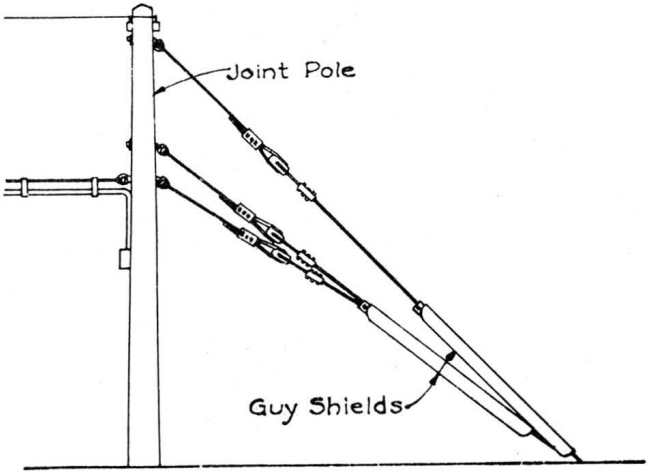

INSTALLING GUYS
EYE BOLT METHOD

Two or more guys attached to separate rods:

Individual guy shields will be required in most cases where two or more guys are attached to separate rods, as it will not be practicable to group such guys unless the eyes of the different rods are very close together.

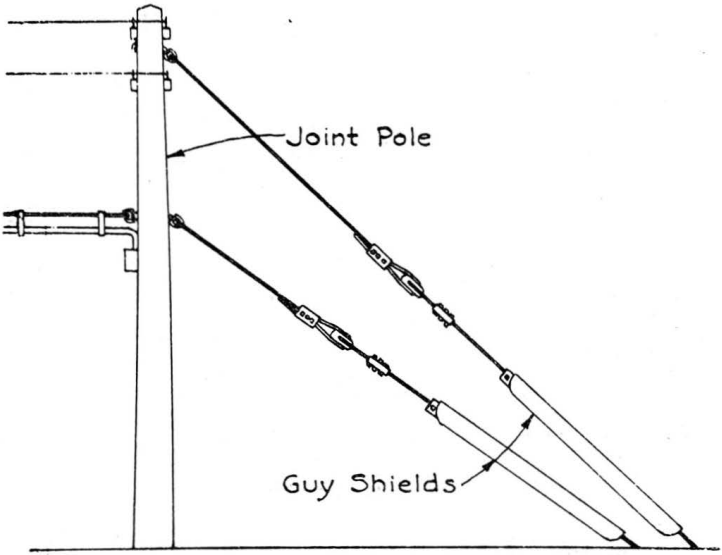

14. CLEARANCES FROM FOREIGN GUYS, RISER CABLES AND GROUND WIRES

14.01 Where two or more pole-to-anchor guys are so located that the required separation of not less than 3 inches between one of the guys and the surface of the strain insulator in the adjacent guy is not obtained, the separation may be secured by installing a spacer in the following manner:

Place a 3-bolt cable suspension clamp on the grounded side of each guy, near the strain insulators, with the flat sides of the clamps facing each other. Insert a 5/8-inch B cable suspension bolt of sufficient length through the center holes of the clamps, using the nuts, to make a spacer like the bolt spacer used in double crossarm construction. No washers will be required in this assembly.

14.02 Where guys are to be attached to poles on which are located vertical runs, risers, ground wire or hardware of a foreign company, it may be necessary to arrange for the relocation of some of the foreign equipment in order to secure the minimum separation of 1-1/2 inches from such equipment as specified in Section G10.301S.