OPEN WIRE

STRINGING WIRE FROM MOVING REELS GENERAL

Contents **Page**

1. GENERAL

1.01 This section and Sections G31.114.2 and G31.114.3 describe a method of stringing line wire from payout reels carried along the line on a trailer or truck.

1.02 This section gives a general description of the method.

2. GENERAL DESCRIPTION OF METHOD

2.01 In the moving reel method of stringing wire, the wire is payed out on the ground, along the line, from payout reels carried on a trailer or truck. The wires are tied to the base of a pole at the beginning of the run. In certain cases it may be found advantageous to dead-end the wires permanently on their correct pin positions initially. In such cases, if joint use or a power crossing is involved, the wires shall be tied securely to the base of the next pole in line to prevent whipping up and the possibility of contacts with power wires. When the reel carrier has advanced several span lengths, the wire is laid up on the pole line with wire raising tools, or it is pulled up with hand-lines. After crossing roads, driveways, or other places where wire lying on the ground, or sagging excessively between poles, might be a hazard, the wires are pulled up to provide satisfactory clearance and snubbed at a pole with wire grips. However, if traffic prevents or interferes, terminate the wire on the near side of a crossing and place the wire in the crossing span by methods outlined in other sections of practices covering wire stringing.

2.02 The moving reel method greatly reduces the need for passing signals along the section of line being worked, as is required in pulling wire from stationary reels. Another advantage of this method is that it concentrates most of the work operations near the truck and trailer carrying the reels; thus closer supervision is possible and the chances of accidents accordingly reduced. The fact that the payed out wire may be pulled up to provide clearance over roads and driveways as soon as such locations have been passed should also help to make the job safer.

2.03 The use of the moving reel method will be determined by job conditions, such as accessibility of the route to motor vehicles, whether wires are to be placed on the road or field side of the poles, the presence of interfering fences or trees, and traffic conditions along the route being worked.

3. REEL SETUP

3.01 Details of a suggested reel setup to be carried on a P3T trailer are shown in the following sketches:

(a) Suggested arrangement for six wires.

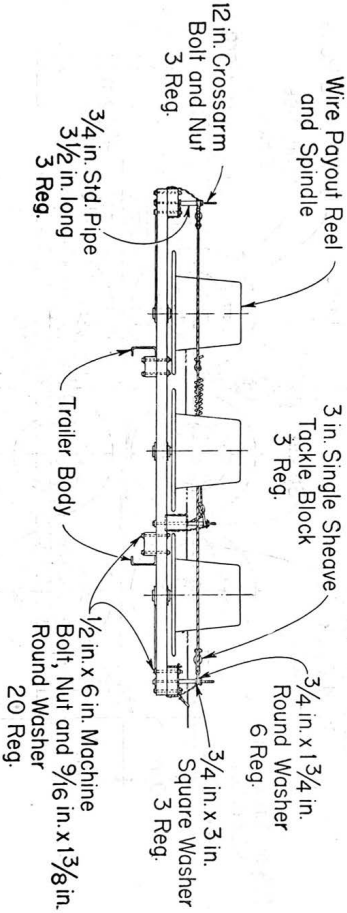

OPEN WIRE STRINGING WIRE FROM MOVING REELS— GENERAL

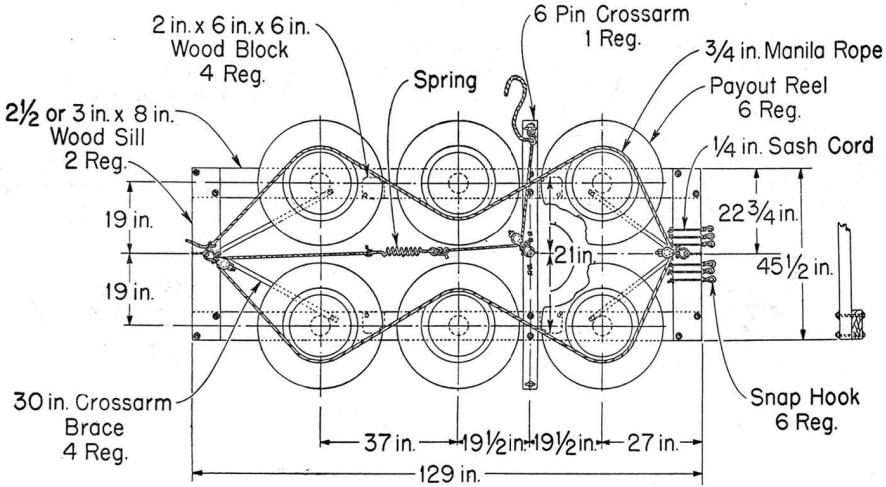
2 in. x 6 in. x 6 in.
Wood Block
4 Reg.
6 Pin Crossarm
1 Reg.
3/4 in. Manila Rope
Spring
Payout Reel
6 Reg.
2 1/2 or 3 in. x 8 in.
Wood Sill
2 Reg.
1/4 in. Sash Cord
19 in.
22 3/4 in.
21 in.
45 1/2 in.
19 in.
30 in. Crossarm
Brace
4 Reg.
Snap Hook
6 Reg.
37 in.
19 1/2 in.
19 1/2 in.
27 in.
129 in.

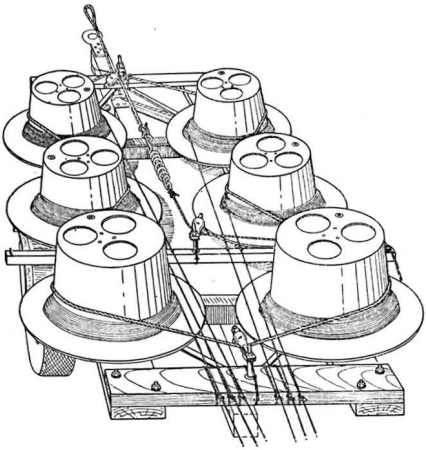

(b) Four wires using same rack as for six wires.

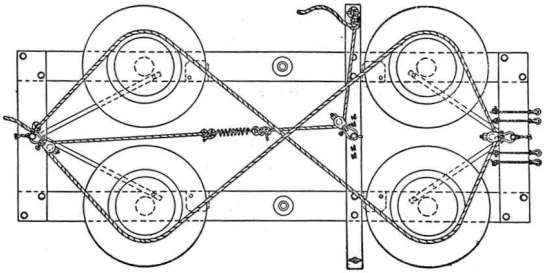

3.02 The reel rack is placed on the trailer body and fastened with four 1/2-inch bolts. The trailer should be used with an extensible tongue. The rope brake is tightened by pulling the free end of the rope and securing it to a cleat; the extra length of rope provides a means of applying additional braking when it becomes necessary to tension and snub wires at road crossings and other locations.