ISSUE NOTES (CONTINUED)

CHANGE TAG H6605= LIST BH ADDED TO TABLE A AND TO STOCKLIST.
CHANGE TAG PI66= NOTE 38 REVISED. SL ITEMS 2011 READ QTY 2, 2017 READ QTY 4, 2018 READ QTY 4. (PI65.1)

ORIG ISS: 03/04/83 CHANGE CLASS: M

DRAFT: GLF	ENGR: GLF	SUPV:	CERTIFIED: 11/05/90	ISSUE: 66

CHANGE TAG H6657= LISTS BJ,BK AND BL ADDED TO TABLE A. SL ITEMS 1181,1761 AND 1876 ADDED.
CHANGE TAG PI67= SL ITEMS 1861 AND 1870 REMOVED, READ: 1861 LIST 4,22,23 OMIT 1 ED5D088-10 G47 LABEL,FUSE; 1870 LIST 4,22,23 QTY 1 ED5D088-10 G122 LABEL FUSE. SL ITEMS 1306,1335,1345 AND 2350 READ LIST 23. ITEM 1871 READ LIST 22,23. ITEMS 2341,2351,2352 4065,4075 ADDED. ITEM 2870 READ 20,20A.(PI 65.1, 66.1-66.4).
CHANGE TAG H6676= LISTS 24,25,40 AND BG WERE RATED STD. LISTS 24A,25A AND 40A ADDED. NOTE 74 REVISED. STOCKLIST ITEMS 1251, 3001 AND 3011 ADDED.

ORIG ISS: 03/04/83 CHANGE CLASS: B

DRAFT: GLF	ENGR: GLF	SUPV:	CERTIFIED: 02/22/91	ISSUE: 67

CHANGE TAG H6676= LISTS 24, 25, 40 AND BG WERE RATED STD.LISTS 24A,25A, AND 40A ADDED. NOTE 74 REVISED. STOCKLIST ITEMS 1251, 3001 AND 3011 ADDED.

ORIG ISS: 03/04/83 CHANGE CLASS: B

DRAFT: GLF	ENGR: GLF	SUPV:	CERTIFIED: 02/22/91	ISSUE: 68

CHANGE TAG H6683=LISTS 1,10,29,42,Y,AB,AE,AY,BF AND BH WERE RATED STD. LISTS 1A,10A,28A,42A,BA,AND BN ADDED. ENGINEERING NOTES 89& 90 ADDED. MFG. NOTE 39 ADDED. CHANGE TAG NOTE H6676 SHOWN IN ISS NOTE 67 IS FOR ISS. 68 ONLY.

ORIG ISS: 03/04/83 CHANGE CLASS: B

DRAFT: PKK	ENGR: GLF	SUPV:	CERTIFIED: 04/08/91	ISSUE: 69

ISSUE NOTES (CONTINUED)

LIST BG AND SL ITEM 3015 ADDED. LIST A CHGD TO ALWAYS REQUIRED.

ORIG ISS: 03/04/83 CHANGE CLASS: B

DRAFT: PEW	ENGR: PEW	SUPV:	CERTIFIED: 11/21/89	ISSUE: 60

SL ITEM 4310 READ GROUP 20.

ORIG ISS: 03/04/83 CHANGE CLASS: A

DRAFT: GLF	ENGR: GLF	SUPV:	CERTIFIED: 01/09/90	ISSUE: 61

CHANGE TAG: PI1 - NOTE 63 LINED OUT. MFG. NOTE 38 ADDED. REF NOTE 38 ADDED TO SL ITEM 2011. REF. NOTE S ADDED TO SL ITEM 3251. 'A' BUS AND GRD BAR NUMBERING ADDED TO FIGURES 5 & 6 REAR VIEW. FIG. N ADDED. LIST 41 AND 44 REMOVED FROM SL ITEM 1104, ITEM 1125 READ 38 INCHES. NOTES 60,61 AND 76 REVISED. 13TH THRU 18TH L27 ADDED TO TABLE AD.

ORIG ISS: 03/04/83 CHANGE CLASS: B

DRAFT: PKK	ENGR: GLF	SUPV:	CERTIFIED: 03/14/90	ISSUE: 62

CHANGE TAG H6542:= IN TBL A LIST 46 & 47ADDED. SL ITEMS 4330 THRU 4430 ADDED. NOTES 86,87 & 88 ADDED. FIG P AND DETAIL B ADDED FIG L READ 401012604 CONN 90 DEGREES.

ORIG ISS: 03/04/83 CHANGE CLASS: B

DRAFT: GLF	ENGR: GLF	SUPV:	CERTIFIED: 03/29/90	ISSUE: 63

CHANGE TAG: PI1= SL ITEM 1510 LINED OUT, ITEM 1511 ADDED. X ADDED TO SHOP AND INST. COLUMN OF MFG NOTE 18. TABLE AE ADDED.

ORIG ISS: 03/04/83 CHANGE CLASS: M

DRAFT: PKK	ENGR: GLF	SUPV:	CERTIFIED: 06/06/90	ISSUE: 64

CHANGE TAG PI1= IN SL ITEM 2862 QTY READ 4,ITEM 2863 QTY READ 8. ITEMS 4400 AND 4430 REMOVED. SL ITEM 4400 READ: LIST 46,QTY1, ED5D500-21,G46,G46B,CABLING,INTER CABINET S. SL ITEM 4430 READ: LIST 47,QTY1,ED5D500-21,G46A,G46C,CABLING,INTER CABINET S. SL ITEM 2968 ADDED.
CHANGE TAG: H6625= IN TBL A LIST 20 RATED DA, LIST 20A ADDED. SL ITEM 2868 ADDED. LIST 20A ADDED TO SL ITEMS 2861,2862,2863,2870, 2880,2890.2930,2945,2950 AND 2961.

ORIG ISS: 03/04/83 CHANGE CLASS: B

DRAFT: PKK	ENGR: GLF	SUPV:	CERTIFIED: 09/07/90	ISSUE: 65

ISSUE NOTES

DESCRIPTION OF LISTS AB & AE REVISED TO INCLUDE PALLETIZED OFFICES. NOTE 84 ADDED. IN TABLE A LIST 20, REF TO LIST 6, 17 AND 7 REMOVED. IN SL ITEM 1041 READ 'ED5D505-15,G20'. ITEMS 1500, 3420, 3430, 3710, 3720, 3770, & 3780 REF TO LIST 42 ADDED. ITEM 2040 REF TO LIST 16 ADDED. ITEMS 3180, 3190, 3200, 3230, 3241, 3250, & 3260 NOTE READ '*/". ITEMS 3210 & 3220 REMOVED. ITEM 3280 REF TO LIST 16 REMOVED. ITEM 4180 READ 'J5D003BE-2,L2'. ITEMS 4270 THRU 4290 ADDED.

ORIG ISS: 03/04/83 CHANGE CLASS: M

DRAFT: PEW	ENGR: PEW	SUPV:	CERTIFIED: 01/16/89	ISSUE: 54

NOTES 17, 53, AND 75 LINED-OUT. NOTE 85; TBL A, LISTS 41, 44 AND 45; SL ITEMS 1060, 1065, 1125, 1135, 1255, 4300 AND 4310; FIGS L AND M ADDED. TBL A, LISTS 2 AND 21; FIG A RATED 'DA'. IN SL ITEMS 1070, 1084, 1094, 1100, 1104 REF TO LISTS 41 AND 44 ADDED. TBL A LIST Z, AND NOTE 83 CHANGED TO REFLECT JULY 1,1989 RESTRICTION DATE. SL ITEM 4290 QTY READ 'OMIT 2'.

ORIG ISS: 03/04/83 CHANGE CLASS: M

DRAFT: PEW	ENGR: PEW	SUPV:	CERTIFIED: 01/26/89	ISSUE: 55

SL ITEMS 1065 & 4270 REMOVED. TBL A, LIST BC; SL ITEMS 1015, 1925, & 3281 ADDED. NOTES 32, 61, & 74; TBL A, LIST A; GRAPHICS FIGS 1, 6, C, L, & M CHANGED. SL ITEMS 3730, 3740, 4060, & 4070 REF TO LIST 42 ADDED. SL ITEM 1051 REF TO LIST 41 ADDED. SL ITEM 1125 REF TO DIMENSION ADDED. SL ITEM 1135 READ '401504915'. SL ITEM 3770 REF TO LIST 42 REMOVED. LIST T, RATING CHANGED TO 'DA'. NOTE 84 LINED-OUT. SL ITEM 4070 QUANTITY READ '4'.

ORIG ISS: 03/04/83 CHANGE CLASS: M

DRAFT: PEW	ENGR: PEW	SUPV:	CERTIFIED: 03/30/89	ISSUE: 56

NOTE 85 CHGD. TBL A, LIST 20, NOTE 37 ADDED TO DESCRIPTION. SL ITEM 2005 REMOVED. SL ITEMS 2010, 2015, AND 2016 REF TO LISTS 24 & 40 REMOVED. SL ITEM 4050 REF TO LIST 42 REMOVED. TABLE A LIST BE; SL ITEMS 2011, 2017, AND 2018 ADDED.

ORIG ISS: 03/04/83 CHANGE CLASS: M

DRAFT: PEW	ENGR: PEW	SUPV:	CERTIFIED: 05/05/89	ISSUE: 57

NOTE 60 REF TO L40; TBL A, L40 REF TO NOTE 60; LIST BD; NOTE 37; SL ITEMS 1871,2861,2862,2863,2965 & 2967; ITEM 3051 REF TO L40 ADDED. TBL A, L20 REF TO NOTE 37; SL ITEM, 4050 REF TO L42; ITEM 4170 REMOVED. TBL A, LZ RATED 'DA'. SL ITEM 3410 & 3420 LINED-OUT. GRAPHICS SHEETS, FIG'S 3,5 & 6 CHGD TO SHOW POSITION OF PDCP COVER ASSY.

ORIG ISS: 03/04/83 CHANGE CLASS: A

DRAFT: PKK	ENGR: PEW	SUPV:	CERTIFIED: 08/16/89	ISSUE: 58

TBL A LIST BF; SL ITEMS 3251 & 4320 ADDED. ITEM 3250 & 1830 LINED-OUT. ITEMS 1570, 1580, & 1590 QTY READ '8'. ITEM 2863 IDENT READ '403404536'.

ORIG ISS: 03/04/83 CHANGE CLASS: M

DRAFT: PEW	ENGR: PEW	SUPV:	CERTIFIED: 09/22/89	ISSUE: 59

SHEET INDEX

SHT NBR	A1 THRU A28 ISSUE 117										
SHT NBR	D1 THRU D21 ISSUE 117										
SHT NBR	B1	B2	B3	B4	B5	B6	B7	B8	B9	B10	B11
ISSUE	113	113	113	113	113	113	113	113	113	113	113
SHT NBR	B12	B13	B14	B15	B16	B17					
ISSUE	113	113	113	113	113	115					
SHT NBR	C1	C2	C3	C4	C5	C6	C7	C8	C9	C10	C11
ISSUE	113	113	113	113	113	113	113	113	113	113	113
SHT NBR	C12	C13	C14	C15	C16	C17	C18	C19	C20		
ISSUE	113	113	113	113	113	113	113	113	113		
SHT NBR											
ISSUE											
SHT NBR											
ISSUE											
SHT NBR											
ISSUE											
SHT NBR											
ISSUE											
SHT NBR											
ISSUE											
SHT NBR											
ISSUE											
SHT NBR											
ISSUE											
SHT NBR											
ISSUE											
SHT NBR											
ISSUE											

TABLE OF CONTENTS

DESCRIPTION	SHT
SHEET INDEX	A1
ISSUE NOTES	A1
ENGINEERING-NOTES	A5
TABLE A	A8
B SECTION GRAPHICS	B1
C SECTION GRAPHICS	C1
MANUFACTURING NOTES	D1
STOCKLIST	D3
MISCELLANEOUS TABLES	D19

COPYRIGHT @ 2001 LUCENT TECHNOLOGIES
ALL RIGHTS RESERVED

BT13

5ESS SWITCHING EQUIPMENT
SPECIFICATION FOR
MISCELLANEOUS CABINET

DWG SIZE C2 | ISSUE 117

LUCENT TECHNOLOGIES INC | J5D005C-1 | SHEET A1 OF 86

PRINTED IN U.S.A.

ISSUE NOTES (CONTINUED)

CHANGE TAG H6920=IN TA & SL ADDED LCB.ADDED EN 99,100.ADDED ITEM
4960 TO SL.LIST BN & BR READ STANDARD.
CHANGE TAG PI80=EN 92 ADDED "BN".IN TA L10A ADDED 1 ED5D184-74 7
L29A ADDED "WITHOUT BN" & 1ED5D503-15 1284,1 ED5D694-30 G2,G3.
LAD REMOVED -1 ED5D184-70 2,ADDED OMIT TO 1 ED5D184-73 1,ADDED
OMIT 1 ED5D184-74 7 & ADDED 1 ED5D184-74 10. LBN IN EQPT COLUM
ED5D184-74 GROUP READ 3.IN SL ITEM 2700 REMOVED LIST AD.
ITEM 2722 ED5D184-74 READ G3.ITEM 2730 ADDED OMIT 1.
ITEMS 2705,2731,2733,2735,2737 & 3725 ADDED. EN 98 ADDED.

ORIG ISS: 03/04/83 CHANGE CLASS: B

DRAFT: SEH	ENGR: SEH	SUPV:	CERTIFIED: 08/10/92	ISSUE: 80

CHANGE TAG H6878=IN TA & SL LIST'S 1A,5A,7A,9B,16A,17A,20B,22A,
23A,24C,25C,27A,28A,29B,40B,42B,42C,46B,54,55,55A,BY,BZ,CA,CB,
CC,CD & CE ADDED.LIST 1A,42A READ STANDARD.
EN 60,62,65,92,97 & 151 MODIFIDE OR ADDED.
MN 41 ADDED.TJ ADDED.SHEET B1 & C10 EQL READ 21.B5 & B6
POWER FEEDER LAYOUT CHANGE.ITEMS 4650 THUR 5110 ADDED.
CHANGE TAG PI81=ITEM 2730 WAS OMIT 1.ITEM 2731 & 2738 ADDED.
ITEM 2660 REMOVE, READ 1A,Z,AB,AC,AE,AF,QTY 4,843077942 BRACKET
2670 REMOVED, READ 1A,Z,AB,AC,AE,AF,QTY 8,840009042 SCREW .164-32
SHEET B2 EQL READ 27,37,47,57 ON FIG 2.TABLE AF REVISED ADDED 0
TO ITEM 1 THUR 9.EN 70 MODIFIDE & MN 41 ADDED & ITEM 1060 ADDED
REF #40(EFG 4565).

ORIG ISS: 03/04/83 CHANGE CLASS: B

DRAFT: SEH	ENGR: SEH	SUPV:	CERTIFIED: 01/15/93	ISSUE: 81

CHANGE TAG H7010=LIST 1B,(5&5A),(28&28A), READ GROUP 7,(8),21
RESP.LIST AS,BJ,BK,(BL),BW ADDED 8A,5A,8A,(9A&9B),5A RESP TO
DESC.LIST C & D READ ADDITION TO 1,1A OR 1B.LIST AN & CA MOD DESC
MANF NOTES 42,43,44 & 45 ADDED. EN 59,60,74,92,93 & 97 MOD.
ADDED LISTS TO ASSOCIATED ITEMS IN SL.

ORIG ISS: 03/04/83 CHANGE CLASS: B

DRAFT: SEH	ENGR: SEH	SUPV:	CERTIFIED: 02/10/93	ISSUE: 82

CHANGE TAG H7033=IN TA & SL LIST 60,61,62,63,64,65,66,67,68,69,CJ
ADDED. ITEMS 5200 THUR 5795 ADDED.LIST BY READ STANDARD.
CHANGE TAG PI83=IN TA AD READ OMIT 1 FOR 1 ED5D184-74,G10
EN 68,80 MODIFIDE.L27 & 27A DESC MOD.L29B READ ED5D694-20.
LIST AR,BA,BB,BC,BE ADDED,OR 16A,28A,28A,20B,24C RESP.
ITEM 1015 ADDED 42C.1180 READ 8A,1810 LINE OUT.2380 ADDED LW.
2395 REMOVED 7,7A.ITEM 2396 ADDED.3710,3725,3730,3740 ADDED 42B.
4770 READ 42B.4780 ADDED 42C.ON L54 ADDED 1 J5D003FJ-1,AQ & ITEM
5130.LIST CE ADDED TO ITEMS 2610,2621,2630,2731,2733,2735,2737.
LIST CE ADDED OMIT G7A & ITEM 2702.

ORIG ISS: 03/04/83 CHANGE CLASS: B

DRAFT: SEH	ENGR: SEH	SUPV:	CERTIFIED: 04/01/93	ISSUE: 83

CHANGR TAG 34519=IN TA & SL L9C ADDED.LIST 9A READ STD.
CHANGE TAG PI84=IN TA LIST 63 ED5D724-14 READ G16 & ITEM 5700
ADDED S NOTE.IN TA LIST 5A & ITEM 1185 ADDED 1 ED5D734-14,G21.
4732 ADDED.ITEM 4730 READ 23A,ITEM 4780 ADDED 23A,4790 READ
406693895 3 AMP.ITEM 4900 READ 23A.ITEM 5300 READ QTY 1 NOW 2.
ITEM 5480 READ 65 QTY 5.ITEM 5485 ADDED LIST 65.ITEM 5690 READ
LIST 69.ITEM 2380 READ W.ITEMS 2615 & 4190 ADDED L42B.LAN ADDED
"OR 27A".

ORIG ISS: 03/04/83 CHANGE CLASS: AC

DRAFT: SEH	ENGR: SEH	SUPV:	CERTIFIED: 05/17/93	ISSUE: 84

ISSUE NOTES (CONTINUED)

CHANGE TAG PI73=IN TABLE A LIST 29A,42A & BM EQUIPMENT READ
ED5D505-15,G1250.IN TABLE A LIST 1A NOTE COLUM READ 89.
SHEET C2 VIEW B-B READ 00 & UP AND SHEET C6 FIG G COMCODE READ
101753044 FRAME MOUNT BAR. (PI 71.1,72.1)
CHANGE TAG H6756- LIST BT ADDED.

ORIG ISS: 03/04/83 CHANGE CLASS: B

DRAFT: GLF	ENGR: GLF	SUPV:	CERTIFIED: 09/27/91	ISSUE: 73

CHANGE TAG H6774 - LIST BU ADDED.

ORIG ISS: 03/04/83 CHANGE CLASS: B

DRAFT: GLF	ENGR: GLF	SUPV:	CERTIFIED: 09/27/91	ISSUE: 74

CHANGE TAG H6727= IN TABLE A & ST LIST BS ADDED.
ENG NOTE 94 ADDED.

ORIG ISS: 03/04/83 CHANGE CLASS: B

DRAFT: SEH	ENGR: SEH	SUPV:	CERTIFIED: 09/27/91	ISSUE: 75

CHANGE TAG H6714= LISTS 48 AND 49 ADDED TO TABLE A AND STOCKLIST.
LIST AS DESCRIPTION READ "8" AND LIST X DESCRIPTION READ
"8 OR 8A".
CHANGE TAG PI76= IN STOCKLIST LINE OUT ITEMS 1200,1205 AND 2721.
ADDED ITEM 2723. IN TABLE A LIST 1A EQPT LIST READ ED5D184-74 G3.
LIST 25B DESCRIPTION READ IN ADDITION TO LIST 25B. LIST BE READ
IN ADDITION TO LIST 24,24A,40 AND 40A. GRAPHS SHEET B1 REVISED.
IN SL ITEM 3070,S ADDED TO NOTE COL.(PI 73.1,74.1,.2)

ORIG ISS: 03/04/83 CHANGE CLASS: B

DRAFT: SEH	ENGR: SEH	SUPV:	CERTIFIED: 12/06/91	ISSUE: 76

CHANGE TAG 14069=IN TABLE A LISTS 50,51,BW & BX.STOCKLIST ITEMS
4600,4610,4620,4630 & 4640 ADDED.

ORIG ISS: 03/04/83 CHANGE CLASS: AC

DRAFT: GLF	ENGR: SEH	SUPV:	CERTIFIED: 03/04/92	ISSUE: 77

CHANGE TAG 14069.1=IN TA LIST 50 READ LIST WC FOR J5D005AD-1 AND
1,SD5D130-01,(7),ZT,ZT.LIST 51 WRG AND APP READ ZT,ZT.LIST BX
READ "ONLY WHEN BK IS NOT SPECIVED".ADDED () TO NOTE 65.

CHANGE TAG PI77 PI78=IN EN 68 READ "OR 14A".IN TA LIST BP READ
"1A AND 10A".

CHANGE TAG H6847=IN TA LIST 48 READ STANDARD.LIST 48A ADDED TO
TA AND STOCKLIST ITEMS 4490,4501,4510 & 4515. (CLASS M)

ORIG ISS: 03/04/83 CHANGE CLASS: AC

DRAFT: SEH	ENGR: SEH	SUPV:	CERTIFIED: 03/25/92	ISSUE: 78

CHANGE H6891=IN TA LIST 7 ADDED "OR 13A+" & "FUSES,FUSE LABELS
AND FASTENERS ONLY TO DESCRIPTION COLUMN.
AND LIST 6 READ STANDARD. ENGINEERING NOTES 57,60,61,68,76 AND 90
REVISED.
CHANGE TAG PI79=IN SL ITEM 1011 LIST 10A ADDED.

ORIG ISS: 03/04/83 CHANGE CLASS: B

DRAFT: SEH	ENGR: SEH	SUPV:	CERTIFIED: 06/05/92	ISSUE: 79

ISSUE NOTES (CONTINUED)

CHANGE TAG H6714= IN TA LIST 46 WAS RATED STD. LIST 46A, 48
AND 49 ADDED TO TA AND STOCKLIST.
CHANGE TAG PI70= MANUFACTURE NOTE 28 HEADING READ 24,25 OR 40
LIST COLUM READ "L24 OR L40" AND "L25".
SL 3100 PROD IDENT COL G192 ADDED.
CHANGE TAG PI70.1= EN 74 "AND MAY BE SHOP MOUNTED" ADDED.
NOTE 89 READ "THE CABINET DESIGNATION LABELS ED5D695-10 ( ) ARE
TO BE JOB ENGINEERED. THE GROUP NUMBERS ARE TO BE ASSIGNED USING
TABLE AF." LEFT RESERVED.
IN TA L40A DESCRIPTION "OR 1A" ADDED.
IN TA LBM DESCRIPTION "FAN" ADDED.
IN TA LBN EQPT LIST FOR ED5D184-74 READ LIST 4.
MANUFACTURE NOTE 39 ADDED "X" IN SHOP & INST COLS.
IN 69 LIST 28A & BA SHOULD HAVE READ 29A & BM.
CHANGE TAG PI70.2= IN TA LBE DESCRIPTION "24A & 40A" ADDED.
CHANGE TAG 14040=IN TA & SL LISTS 24B & 25B ADDED.LISTS 24A & 25A
WERE RATED STD. NOTE 60 REVISED.
CHANGE TAG H6598=
PI70=IN TA LIST 1A EQPT READ QTY 1,EQPT J5D003AU-2,L SG & E
NOW ADDED L 1A EQPT READS QTY 2, EQPT J5D003AU-2, L E.

ORIG ISS: 03/04/83 CHANGE CLASS: B

DRAFT: SEH	ENGR: SEH	SUPV:	CERTIFIED: 07/02/91	ISSUE: 70

CHANGE TAG 14045= IN TABLE A LIST 9 WAS RATED STD. LIST 9A AND
ITEM 4550 ADDED. LIST 9A ADDED TO ITEMS 1180,1875,1890,1931,
1940,1950,2010,2015,2016 & 2611.
CHANGE TAG PI71= ENG NOTE 68 REVISED TO REMOVE "WITH 13A OR 14A-
RA UNIT" VERT EQL 60,56,52 AND IDENT 0,1,2 RESP.
STOCKLIST ITEM 2615 ADDED.NOTE 92 ADDED.
L42A DESC RMD "OR WHEN FOUR 13A RECORDED ANNOUNCEMENT UNITS ARE
MOUNTED IN ONE MISCELLANEOUS CABINET"
MANUFACT NOTE 31 READ "1ST L28 19 1T-4T 7T-12T OR 1B-4B 7B-12B"
"2ND L28 28 13T-16T 19T-24T OR 13B-16B 19B-24B"
IN TABLE A,LIST 1A REMOVED ED5D503-16,G5,FROM EQUIPMENT COLUM
IN TABLE A,LIST 29A OMIT "L41 OR L41A" FROM DESCRIPTION,NOTE 92
AND QTY 1 ED5D505-16 G1250 ADDED.
LIST 42A NOTE 92 AND QTY 1 ED5D505-16 G1250 ADDED.
LIST BM NOTE 92 AND QTY 1 ED5D505-16 G1250 ADDED;CORRECT
ED5D691-30 TO READ ED5D694-30. LIST X ADDED "OR 8A" IN DESC.
LIST BN ED5D505-16,L5 ADDED TO EQPT COLUM.
IN SL: ITEM 1015 L42A ADDED. ITEM 1051 L44 ADDED.ITEM 2615 ADDED.
ITEM 1701 L1A ADDED. ITEM 4065 L42A ADDED.
ITEM 2609 LBN ADDED & L1A REMOVED.
ITEM 3100 G192 ADDED TO PRODUCT COLUM. (PI 70.0 - 70.8)

ORIG ISS: 03/04/83 CHANGE CLASS: A

DRAFT: SEH	ENGR: GLF	SUPV:	CERTIFIED: 08/16/91	ISSUE: 71

CHANGE TAG H6714 SHOWN IN ISS NOTE 70 DOES NOT APPLY TO THAT
ISSUE.
CHANGE TAG H6598- ENG NOTES 91 & 93 ADDED. IN TABLE A DESCRIPTION
FOR LIST 5 READ "FOR OFFICES WITH SINGLE MODULE INVIROMENT";
LISTS 8,26,46, AND AZ WERE RATED STD;LIST 8A,26A,46A,BP AND BR
ADDED; LISTS BN READ "CABINET BEZELS AND IMPROVED DOORS FOR EMI
OMIT1 ED5D184-74 GROUP 4. 105389548 ADDED TO MANUF NOTE 26.
LIST 26A ADDED TO S/L ITEMS 1250,3070,3080,4520,4530 AND 4540.
ITEM 2791 READ "LIST 1A,10A; ITEM 2799 REMOVED-READ "BN OMIT2,
845622976, ASSY DOOR. ITEMS 2810 AND 2820 READ AE,BN; LIST
BR ADDED TO ITEM 4260. LIST 46A ADDED TO ITEMS 4330,4340,
4350;4360,4370,AND 4380. ITEM 4395 ADDED FOR LIST 26A.
CHANGE TAG 72PI- IN TABLE A LISTS 29A,42A AND BM READ
ED5D505-16; ED5D505-16 G5 ADDED TO LIST BN.

ORIG ISS: 03/04/83 CHANGE CLASS: B

DRAFT: GLF	ENGR: GLF	SUPV:	CERTIFIED: 09/04/91	ISSUE: 72

COPYRIGHT @ 2001 LUCENT TECHNOLOGIES
ALL RIGHTS RESERVED

BT13

5ESS SWITCHING EQUIPMENT
SPECIFICATION FOR
MISCELLANEOUS CABINET

DWG SIZE C2 | ISSUE 117

LUCENT TECHNOLOGIES INC | J5D005C-1 | SHEET A2 OF 86

PRINTED IN U.S.A.

ISSUE NOTES (CONTINUED)

ADDED NOTE 165.
IN TABLE A MODIFIED DESCRIPTION OF LISTS 64,66,66A,71,72,DC,DD, DE,DF,DL,DM,DN & DO.
ADDED LISTS 66B AND 72A.
REMOVED LINEOUT FROM STOCKLIST ITEMS 5400,5410,5420,5470,6070, 6090 & 6100.
REMOVED REFERENCE TO LISTS DN & DO, DL & DM, DE & DF FROM ITEMS 5450, 5460 & 6110 RESPECTIVELY.
ADDED REFERENCE TO LISTS 66B & 72A TO ITEMS 5570 THROUGH 5660 6140 & 6150.
ADDED REFERENCE TO LIST 71A TO ITEM 6110 AND LIST 72A TO ITEM 6130.
REMOVED ITEMS 6071 AND 6091.
INCORPORATED POINT CHANGES.

ORIG ISS: 03/04/83 NDD NBR: NDD5D005NW-63 CHANGE CLASS: B

DRAFT: ALK	ENGR: ALK	SUPV: FNG	CERTIFIED: 03/23/95	ISSUE: 99

MISCELLANEOUS CHANGE TAGS INCORPORATED; ENG NOTE 169 ADDED; LISTS 25F, 25G, 46B, 47, 48A, 49, 69, 71A, CM & CU RATING WAS "STD", LISTS 25H, 25I, 81, CV & GA ADDED, LIST 27 RATING CHGD FROM "DA" TO "LA", LIST 60C REF TO NOTES 153 & 159 ADDED, LIST FA REF TO LISTS FH & FW ADDED, LISTS FH & FW REF TO LISTS 20C, 41A & 44A ADDED, LIST FX REF TO LISTS 1 - 1B ADDED, LIST FY DESC. CHGD; MFG NOTES 49 & 50 ADDED; STOCKLIST ITEMS 3007, 5203, 5205, 6181, 7230 7240, 7265, 7270 & 7290 ADDED, ITEMS 5620 & 6800 REF TO NOTE "S" ADDED, ITEMS 5202 & 5206 LINED OUT, ITEM 5210 REF TO LISTS 41A, 44A, 65A & 67 ADDED, ITEMS 5220, 5245, 5290 & 5310 REF TO LIST 60C ADDED, ITEM 5495 REF TO NOTE 50 ADDED, ITEMS 7170 & 7180 REMVD, ITEMS 7200, 7210 & 7220 REF TO NOTE "46" READ "49", SHEETS B1 - B6, B8, C3, C10 - C14 & C16 - C18 MISC GRAPHIC CHANGES MADE.

ORIG ISS: 03/04/83 CHANGE CLASS: ME

DRAFT: TMR	ENGR: TMR	SUPV: FNG	CERTIFIED: 06/09/95	ISSUE: 100

NOTES 166, 167 & 168 ADDED; LISTS 80, 82 & REF TO ADDED TO PROVIDE A REMOTE ALARM FEATURE.

ORIG ISS: 03/04/83 NDD NBR: NDD5D005NW-64 CHANGE CLASS: B

DRAFT: TMR	ENGR: TMR	SUPV: FNG	CERTIFIED: 07/07/95	ISSUE: 101

IN TABLE A LIST 5C "J5D005AD-1,L1C" READ "L1B"; LISTS 27, 60A, 60B, 62, 62A, 63, 64, 70 & 71 RATING WAS "LA"; LISTS 29A, 29B, 29C & 68 RATING WAS "STANDARD"; LIST 67 DESCRIPTION READ "IN ADDITION TO LIST 60"; LIST CU RATING WAS "DA"; LIST FO QUANTITY READ "14"; IN STOCKLIST ITEM 1183 LINED OUT, ITEM 1184 ADDED; ITEM 5204 REF TO LIST "60C" ADDED; ITEM 5410 REF TO LIST "41A, 44A" REMVD; ITEM 5245 PROD ID READ "846917300"; ITEM 5310 QTY READ "2"; ITEM 5470 REF TO L66B ADDED; ITEM 6188 REF TO NOTE 25 ADDED.

ORIG ISS: 03/04/83 CHANGE CLASS: MF

DRAFT: TMR	ENGR: TMR	SUPV: FNG	CERTIFIED: 10/11/95	ISSUE: 102

CHANGED LISTS 16A, AND 20B TO DA. CHANGED LIST 27 FROM DA TO LA. ADDED LISTS 16B, 20C AND 83. CHANGED LISTS 81 AND BE. UPDATED TABLE A DESCRIPTIONS FOR LISTS 80, X, AG, AP, AR, AS, AX, BD, DN AND DO. CHANGE ENGINEERING NOTES 59, 80, 85, 97, 152, 155 AND 165 AND ADD NOTES 170 AND 171. CHANGE GRAPHIC SHEETS C10, C11, C14, C15, AND C16. CHANGED STOCKLIST ITEMS 1846, 1850, 2000, 2011, 2040, 2621, 2861, 2862, 2863, 2880, 2890, 2930, 2935, 2945, 2950, 2961, 3170, 5030, 5680, 5690, 5710, 5730, 5740, 5940, 5955, 6000, 6010, 6020, 6050, 6060, AND 6480. ADDED STOCKLIST ITEMS 2001, 2012, 2868, 2869, 2870, 2871, 3190, 3230, 3241, 4967, 4970, 5471, 5900, 5910, 5941, 5031, 5061, 6090, 6100, 6128, 6131, 6492, 6494, 7231, AND 7232. ADD SHEET C19. LIST 9D CHANGED TO DA AND ADD LIST 9E. CHANGE STOCKLIST ITEMS 2010, 2015, 2016, AND 4840. ADD STOCKLIST ITEM 1878. CORRECTED STOCKLIST ITEM 5061 TO SHOW G30A. ADDED SHEET C20. ADD LISTS GB, GC, AND GD. ADDED STOCKLIST ITEMS 5035, 5036, 5465, 5466, 6115, AND 6116. UPDATED TABLE A DISCRIPTION FOR LIST W.

ORIG ISS: 03/04/83 NDD NBR: NDD5D005NW-68 CHANGE CLASS: B

DRAFT: PEM	ENGR: PEM	SUPV: FNG	CERTIFIED: 06/12/96	ISSUE: 103

ISSUE NOTES (CONTINUED)

H7263, PTISS, ISS92 - IN TABLE A LIST 9D REF TO LIST 1A REMVD REF TO DEAD SYSTEM ALARM LINED OUT, LISTS 29A, 29B & 29C REF TO 'ALWAYS' REQUIRED REMVD, LIST BW REF TO LIST 5B ADDED, LIST BX RATING WAS 'STANDARD', LIST CP ADDED;LIST CN ADDED; STOCKLIST ITEM 1182 REF TO L8A & 9D REMVD, ITEM 1251 QTY READ '6', ITEM 6200 ADDED.

ORIG ISS: 03/04/83 CHANGE CLASS: B

DRAFT: TMR	ENGR: TMR	SUPV: FNG	CERTIFIED: 06/24/94	ISSUE: 92

H7238 - NOTES 159 - 162 ADDED; LISTS 5,7,9C,16,17,20A,22,23,27, 28,29A,40A,42B,46A,55,60A,60B,62,62A,63,64,70,71,A,H,J,V,AJ,BM, CQ & CN RATING WAS "STANDARD",LISTS 60C,62A, DA THRU DO & FA THRU FY AND REF TO ADDED. STOCKLIST ITEMS 1250,1251,1255,1845,1960, 2630,2640,2968,3180,4070,4380,4420,4590,5410,5560,5720,5760 & 6100 LINED OUT.

ORIG ISS: 03/04/83 CHANGE CLASS: B

DRAFT: TMR	ENGR: TMR	SUPV: FNG	CERTIFIED: 07/18/94	ISSUE: 93

H7307 - LISTS 60A AND 60B RATING WAS "DA".

ORIG ISS: 03/04/83 CHANGE CLASS: ME

DRAFT: TMR	ENGR: TMR	SUPV: FNG	CERTIFIED: 08/05/94	ISSUE: 94

H7320 - LIST 60A & 60B RATING WAS "STD" LISTS 62, 62A, 63, 64, 70 & 71 RATING WAS "DA", DA EFF: DATE WAS "07/18/94", LISTS DA & DB DESCRIPTION READ "LIST 60, 60A OR 60C".

ORIG ISS: 03/04/83 CHANGE CLASS: MF

DRAFT: TMR	ENGR: TMR	SUPV: FNG	CERTIFIED: 08/19/94	ISSUE: 95

H7216 - NOTES 157 & 164 ADDED; LISTS 56, 57, 58, 59, 73, 74, 75, 76, 77, 78, CQ, CR, CS, CT, CU, FK & FO ADDED.
PTISS - LISTS 25F & 25G REF TO "J5D003ED-2,L5" READ "L3", LISTS 41A & 44A REF TO "ED5D621-20,G24" ADDED, LIST 52 "FE" INFO ADDED, LISTS 54 & 67 RATING WAS "STANDARD, NOTES 95 & 96 ADDED, SL ITEM 5385 LINED OUT, 5386 ADDED.

ORIG ISS: 03/04/83 CHANGE CLASS: B

DRAFT: TMR	ENGR: TMR	SUPV: FNG	CERTIFIED: 09/13/94	ISSUE: 96

LIST 5B RERATED TO DA
LIST 5C ADDED.
LISTS 8A,16A,W,X,AS,BJ,BW,CP,FC AND FR HAD LIST 5C ADDED.
STOCKLIST ITEM 1183 ADDED.
STOCKLIST ITEMS 1185,2010,2015,2016 AND 4820 HAD LIST 5C ADDED.

ORIG ISS: 03/04/83 CHANGE CLASS: AU

DRAFT: ALK	ENGR: ALK	SUPV: FNG	CERTIFIED: 12/22/94	ISSUE: 97

TABLE A LIST 23A RERATED TO DA
TABLE A LIST 79 ADDED.
TABLE A LISTS FH AND FW CHANGED TO INCLUDE LIST 79.
MANUFACTURING NOTE 49 ADDED.
TABLE A LIST 56 CHANGED TO INCLUDE LISTS 1B,60A-60C.
TABLE A LIST 58 CHANGED TO INCLUDE LIST 78.
TABLE A LIST 78 CHANGED TO INCLUDE LISTS 1B,60A-60C.
TABLE A LIST DL CHANGED TO INCLUDE LIST 60C.
LIST DM CHANGED TO ADD NOTE 165 AND ADD LIST 60C.
LIST DN CHANGED TO INCLUDE NOTE 165.
LIST DO CHANGED TO INCLUDE NOTE 165.

ORIG ISS: 03/04/83 NDD NBR: NDD5D005NW-60 CHANGE CLASS: B

DRAFT: ALK	ENGR: ALK	SUPV: FNG	CERTIFIED: 02/14/95	ISSUE: 98

ISSUE NOTES (CONTINUED)

CHANGE TAG H7034=IN TA & SL LIST CF,CG & CH ADDED.
CHANGE TAG PI85=5480,5510,5710,5760 QTY READ 2.5720,5730,5740 QTY READ 3.ITEMS 5480,5680,5690,5710,5720,5730,5740,5750,5760, 5770,5780 READ S.ITEM 5550 READ L65,67 QTY 1 843068222 BUSHING. ITEM 5700 READ L68 QTY 1 FITTING.ITEM 5730,5770 READ 840059042. ITEMS 2935,5960 THRU 6060 ADDED.MANF NOTE 46 & 47 ADDED.2930 LINE OUT.ITEM 4910 ADDED S NOTE.LIST 42B ADDED ED5D503-15 G1272 & ITEM 4460.

ORIG ISS: 03/04/83 CHANGE CLASS: B

DRAFT: SEH	ENGR: SEH	SUPV:	CERTIFIED: 05/27/93	ISSUE: 85

CHANGE TAG H7034=IN TA & SL LIST 70,71,72 ADDED.ENG NOTE 155 ADDED. LIST 63,64,66 MODIFIDE.LISTS AD & CE READ STANDARD.LIST CH MODIFIDE DESCRIPTION READ ADDITION TO AD OR CE AND REMOVED ITEM 5840 READ -1 ED5D184-74 G10.ITEM 5420 & 6070 READ 847033966 ITEMS 5425 & 6075 ADDED.
CHANGE TAG PI86=ITEMS 4732 & 4900 READ 22A.
ITEM 5480 READ 5.ENG 90 MOD.

ORIG ISS: 03/04/83 CHANGE CLASS: B

DRAFT: SEH	ENGR: SEH	SUPV:	CERTIFIED: 06/11/93	ISSUE: 86

CHANGE TAG H7041=IN TA & SL ADDED LISTS 29C,42D & CK.
CHANGE TAG PI87=SL ITEM 5520 READ 1.IN TA & SL ADDED ED5D693-15 G3 & G4 TO LIST 66 & 72.MOD DESCRIPTION ON L29A,29B,42C,BM,CD IN TA.

ORIG ISS: 03/04/83 CHANGE CLASS: B

DRAFT: SEH	ENGR: SEH	SUPV:	CERTIFIED: 08/05/93	ISSUE: 87

CHANGE TAG H6877=IN TA & SL LISTS 25D,25E,25F,25G, CL,AND CM ADDED.LISTS 24B,24C,25B,25C DA'ED.
CHANGE TAG PI88=SHEET INDEX UPDATED,IN TA L9B REFERENCE TO J5D003AU-2 REMOVED,PT ISSUE INCLUDED (87.1).
IN SL:ITEMS 3005,4675&5201 ADDED. ENGINEERING NOTE 156 ADDED.

ORIG ISS: 03/04/83 NDD NBR: NDD5D005NW-38 CHANGE CLASS: B

DRAFT: MAL	ENGR: MAL	SUPV: PK	CERTIFIED: 12/08/93	ISSUE: 88

CN44511NW - LISTS 41,44 & 65 RATING WAS "STANDARD"; LISTS 41A, 44A,65A,66A & 67A AND REF. TO ADDED.

ORIG ISS: 03/04/83 CHANGE CLASS: AU

DRAFT: TMR	ENGR: TMR	SUPV: FNG	CERTIFIED: 04/08/94	ISSUE: 89

H7192 - LISTS 5A & 9B RATING WAS "STANDARD", LISTS 5B, 9D, 65A & 67A ADDED. LIST 66A, ADDED IN ERROR ON ISSUE 89 REMOVED.

ORIG ISS: 03/04/83 CHANGE CLASS: B

DRAFT: TMR	ENGR: TMR	SUPV: FNG	CERTIFIED: 04/14/94	ISSUE: 90

H7179 - NOTES 92,152,155 & 156 MODIFIED, NOTE 158 ADDED; LIST 10A 11,12,13,14,15,60,61,E,F & G RATING WAS "STANDARD", LISTS 60A,60B 62 & 62A AND REFERENCE TO ADDED.

ORIG ISS: 03/04/83 CHANGE CLASS: B

DRAFT: TMR	ENGR: TMR	SUPV: FNG	CERTIFIED: 05/11/94	ISSUE: 91

COPYRIGHT @ 2001 LUCENT TECHNOLOGIES
ALL RIGHTS RESERVED

BT13

5ESS SWITCHING EQUIPMENT
SPECIFICATION FOR
MISCELLANEOUS CABINET

DWG SIZE C2 | ISSUE 117

LUCENT TECHNOLOGIES INC | J5D005C-1 | SHEET A3 OF 86

PRINTED IN U.S.A.

ISSUE NOTES (CONTINUED)

(H8646) ADDED:L93,94,96,97,98,99,GM,GN,GO,GP,GQ,GR,GS,GT,GU,GV, GW,GX,GY,GZ,HA,HB,HC,HD, SL ITEMS 6411,9221,9222, 9460,9470,9480,9490,9500,9510,9520,9530,9540,9550, 9560,9570,9580,9590,9600,9610,9620,9630,9640,9650, 9660,9670,9680,9690,9700,9710,9720,9730,9740,9750, 9760,9770,9780,9790,9800,9810,9815,9816,9817,9818; NOTE 184,185,186,187,188.
CHGD:L22A,56,58,59,73,74,75,78,86,M,BZ,CD,CQ,CS,CT,GE DESC CHGD; L5D,8B,22A,42E,42F,66,72B EQPT REF CHGD; L87,AK,BU,CJ,FS RATING WAS STD; NOTE 179 LINED OUT; L88,91 RMVD NOTE 179 REF; SL ITEMS 2990,4580,4760, 4965,9035 LINED OUT; LGP,GQ ADDED TO SL ITEM 2019; LGZ ADDED TO SL ITEM 4740; SL ITEM 5052,5053 WAS LINED OUT; SL ITEM 9140 CC WAS 401814785; SL ITEM 9380 THRU 9430 ADDED NOTE SYM "X"; SL ITEM 9450 QTY WAS 4; SL ITEM 6310 LIST GRP WAS 86; SL ITEM 6420 LIST GRP WAS 87; ADDED LGR TO SL ITEM 6430; ADDED LGS TO SL ITEM 6450; ADDED LGP TO SL ITEM 6960; ADDED L99,GQ TO SL ITEM 7110; ADDED L91 TO SL ITEM 7120; SL ITEM 9030 LIST GRP WAS 79A,84,85; SL ITEM 9140 CC WAS 401814785; SL ITEM 6470 WAS LINED OUT AND ADDED LIST GRP 91,93,94,97,98,GZ; SL ITEM 6480 WAS LINED OUT AND LIST GRP 93,94,96,97,98,GZ ADDED; REF TO L88,91,GA,GT,GU,GV,GW,GX,GY ADDED TO NOTE 178; NOTE 157 REF WAS L57; REF TO NOTE 500 ADDED TO LISTS 16B,17A,20C,25J,25K,25L,25M,40B,43,45,54, 55A,79A,81,83,84,85,C,D,L,AG,AR,AX,BC,BD,BE,BT,CH, CK,CL,CQ,CR,CS,CT,CV,DJ,DK,DQ,DR,DS,DT,DU,DV,DW,FA, FB,FC,FE,FH,FK,FP,FQ,FR,FS,FW,GA,GB,GF,GG,GH,GJ; REF NOTE 186 ADDED TO LISTS 56,59,73,74,75,78,86, 97,98,GZ; NOTE 178 LINED OUT; L8B RMVD FROM SL ITEM 2013; REF TO NOTR 187 ADDED TO LISTS 1B,60C; LINED OUT NOTE 164; ADDED NOTE 186 REF TO L86; L79A,DT,DU,GY - RATING WAS STD; LGE - REF L79B WAS L79A; LFK - REF L79A RMVD; IN SL ITEMS 9060,9070, 9090,9100,9110,9120,9140,9210 REF L79B WAS L79A; IN SL ITEM 7010,9230 REF LDT RMVD; IN SL ITEM 7160, 9230 REF LDU RMVD; SL ITEM 9220 LINED OUT; L17A REF TO L500A WAS L500, LF6 ADDED; IN SL ITEM 1146,L500A WAS L500, LF6 ADDED; SL ITEM 9690 LINED OUT; L96 DESC REV TO INCLUDE 300' CABLE; LDS,DW - ADDED MAX 7 PER L60C; SL ITEMS 1151,1160,1170,5080,5090,5100, 5110,5630,5640,5650,5660 LINED OUT; LGF,GG,GH,GJ, DESC REV.

ORIG ISS: 03/04/83 CHANGE CLASS: B

DRAFT: DRH	ENGR: DRH	SUPV: FNG	CERTIFIED: 02/17/00	ISSUE: 111

(H09020) ADDED: L100; SL ITEM 9819,9820; EN189.
CHGD: REF TO L100 ADDED TO SL ITEM 7120; LINED OUT SL ITEMS 1140,1900,2370.

ORIG ISS: 03/04/83 CHANGE CLASS: B

DRAFT: DRH	ENGR: DRH	SUPV: FNG	CERTIFIED: 03/02/00	ISSUE: 112

(H09075) ADDED: L101; SL ITEMS 9821 THRU 9834; EN 190; DN 104 105,106; SHT B16; NOTE 500 TO L96,97,98.
CHGD: L55A,66C,72B,CL,CV,GA,GB, RMVD NOTE 500; SL ITEM 9660 READ L96; SL ITEMS 9060,9070,9090,9100,9120, 9140 RMVD L79B; SL ITEM 9140 RMVD L84,85; SL ITEM 9140 ADDED LGE; REV SH B1 THRU B16 AND C1 THRU C20 HEADER PROPRIETARY CODE TO READ LUCENT.

ORIG ISS: 03/04/83 CHANGE CLASS: B

DRAFT: DRH	ENGR: DRH	SUPV: FNG	CERTIFIED: 06/28/00	ISSUE: 113

(H09153) ADDED: L90A; SL ITEM 9361.
CHGD: L90 RATING WAS GA; LINED OUT SL ITEM 9360; SL ITEM 9110 & 9210 RMVD L79B.

ORIG ISS: 03/04/83 CHANGE CLASS: ME

DRAFT: DRH	ENGR: DRH	SUPV: FNG	CERTIFIED: 07/21/00	ISSUE: 114

ISSUE NOTES (CONTINUED)

ADDED TRANSMISSION RATE CONVERTER UNIT MODEL 3 (TRCU3) ORDERING INFORMATION AND MOUNTING PLATE BRACKET SUBSTITUTION INFORMATION IN ENGINEERING NOTE #174.

ORIG ISS: 03/04/83 NDD NBR: NDD5D003NW-825 CHANGE CLASS: B

DRAFT: DRH	ENGR: DRH	SUPV: FNG	CERTIFIED: 08/27/98	ISSUE: 107

CHANGE TAG H8602 -
ADDED : L92,LGK,LGL; SL ITEMS 7300,7310,7320,7330,7340; ENG NOTES 180,181,182,183; SHT B15.
MODIFIED : SL ITEM 6000 WAS LINED OUT & USED ON L68 & L83; SHT B13.
DA'ED : LDO,LCB.

ORIG ISS: 03/04/83 NDD NBR: NDD5D005NW-89 CHANGE CLASS: B

DRAFT: DRH	ENGR: DRH	SUPV: FNG	CERTIFIED: 03/15/99	ISSUE: 108

THIS ISSUE NOTE REPLACES THE PREVIOUS ISSUE NOTE FOR WORK DONE ASSOCIATED WITH CASE #H8485.
ADDED : EN NOTES 175,176,177,178,179,499,500; LISTS 5D,8B,86, 87,88,89,90,91,AQ,DQ,DR,DS,DT,DU,DV,DW,GF,GG,GH,GJ; SL ITEMS 1146,1152,2394,5054,5055,9240,9250,9260,9270, 9280,9290,9300,9310,9320,9330,9340,9350,9360,9370,9380, 9390,9400,9410,9420,9430,9440,9450; MFG NOTE 103.
LINED OUT : SL ITEMS 1012,1013,1015,1145,1150,1181,1184,1760, 1761,1876,1878,2230,2240,2280,2393,2500,2505,2737,2760, 2770,2791,3070,3080,3130,3140,3150,3160,3170,3190,3200, 3230,3231,3241,3251,3270,3282,3325,3326,3350,3360,3380, 3460,3470,3870,3880,4080,4090,4100,4250,4260,4330,4340, 4350,4360,4370,4390,4395,4410,4490,4500,4501,4510,4515, 4521,4530,4540,4570,4600,4610,4620,4640,4740,4745,4800, 4810,4840,4910,4920,4940,4950,4960,5050,5051,5052,5053, 5061,5210,5220,5380,5386,5390,5620,5670,5790,5795,6190, 6200,6390,6400,6470,6480,6490,6492,6494,6510,6520,6530, 6540,6550,6580,6590,6600,6800,6810,6820,6830,6840,6850, 6860,6870,6900,6910,6920,6930,6990,7000,7020,7030,7080, 7130,7140,7150,7231,7232,7265,7270,7280.
DA'ED : LISTS 5C,8A,9E,26A,27A,28A,50,51,52A,53A,57,76,77,80, 82,X,AN,AP,AS,BA,BB,BJ,BK,BL,BP,BS,BW,CA,CB,CP,CU,DA, DB,DC,DD,DE,DF,DL,DM,DN,DO,DP,FD,FF,FG,FI,FJ,FO,FT,FU, FV,FX,FY.
MODIFIED : SL ITEMS 6300,6330,6340,6350,6360,6370,6380,6410, RMVD "S" NOTE; SL ITEM 2013 READ 5C,8A,9E; SL ITEMS 1185,4760,4820 READ L5C; SL ITEM 5450 READ L63,DC,DD; SL ITEM 5466 READ LDE,DF,GC; SL ITEM 6116 READ LDL,DM, GD; SL ITEM 6080 READ L70,DN,DO; SL ITEM 2040 MFG NOTE 103 REF ADDED; SL ITEM 9030 MFG NOTE 102 REF ADDED; SL ITEM 7010 ADDED LDT; SL ITEM 7120 READ LFS; SL ITEM 7160 ADDED LDU; SL ITEM 9230 READ L79A; SL ITEM 6330 READ L57; SL ITEM 6310 READ L56; SL ITEM 6970 READ LFD; SL ITEM 6420 READ L78; LISTS 16B,BU,CQ,CR,CS,CT,GB DESC REV.

ORIG ISS: 03/04/83 NDD NBR: NDD5D005NW-86 CHANGE CLASS: ME

DRAFT: DRH	ENGR: DRH	SUPV: FNG	CERTIFIED: 03/18/99	ISSUE: 109

(H8602)ADDED:L92,GK,GL; SL ITEMS 7300,7310,7320,7330,7340; ENG NOTES 180,181,182,183; SHT B15.
CHGD:SL ITEM 6000 DESC REV AND REF ADDED TO L68,83; SHT B13 REV; LDO,CB RATING WAS STANDARD.

ORIG ISS: 03/04/83 NDD NBR: NDD5D005NW-89 CHANGE CLASS: B

DRAFT: DRH	ENGR: DRH	SUPV: FNG	CERTIFIED: 06/21/99	ISSUE: 110

ISSUE NOTES (CONTINUED)

CHANGE NAME FROM AT&T TO LUCENT TECHNOLOGIES. CHANGE NOTE 51 TO REFERENCE LUCENT PRACTICES. ADD SL ITEMS 2872, 2873, 2874, 1062, 1063, AND 4481. CHANGE NOTE 165 BY ADDING DC, DM, DJ, AND DK. CORRECT SPELLING IN NOTE 169. ADD LISTS 41B, 44B, 65B, AND 67B TO TABLE A. LISTS 41A, 44A, 65A, AND 67A CHANGED TO DA. CHANGE PDP/FAN TO FAN/FUSE IN TABLE A DESCRIPTION OF LIST CK. ADD LIST 83 TO TABLE A DESCRIPTION FOR LIST FC, FR. ADD LIST 20C TO TABLE A DESCRIPTION OF LIST FP. SL ITEMS 5730 AND 5740 QTY WAS 2. LINE OUT SL ITEM 5290. REMOVE LIST 20C FROM SL ITEMS 2861, 2862, 2863, 2945, 2950, 2961. ADD LIST 41B AND 65B TO SL ITEMS 1015, 1051, 1070, 1084, 1094, 1100, 1125, 1135, 5960, 5970, 5980, 5990, 6030. ADD LIST 44B AND 67B TO SL ITEMS 1135, 5485, 5500, 5510, 5520, 5530, 5540, 5570, 5770, 5780, 5960, 5970, 5980, 5990, 6030. ADD LIST 79 TO SL ITEM 6030. ADD LIST GB TO SL ITEM 4480. LINE OUT SL ITEMS 5031 AND 5035. ADD LIST CK TO SL ITEM 5030. ADD SL ITEM 5037. ADD SHEETS B9, B10, AND B11. CHANGE NOTE 71. ADD SL ITEM 5781, 5782. SL ITEM 5780 QTY WAS 2. LINE OUT SL ITEM 5120. ADD SL ITEM 5121.

ORIG ISS: 03/04/83 NDD NBR: NDD5D005NW-75 CHANGE CLASS: B

DRAFT: PEM	ENGR: PEM	SUPV: FNG	CERTIFIED: 09/30/96	ISSUE: 104

ADD AD-FREE FEATURE AS LIST 84. ADD STOCKLIST ITEMS 9000 THROUGH 9230. ADD SHEETS B12 - B14. DA ALL VIEWS ON SHEET C19. INCORPORATE POINT ISSUES. ADD STOCKLIST ITEMS 2013, 2019, AND 3282. LINE OUT STOCKLIST ITEMS 2001, 2010, 2012, 4075, 2015, 2016, 2017, 2018, AND 3281. ADD */ NOTE TO STOCKLIST ITEM 2873. REMOVE LINE OUT ON STOCKLIST ITEM 2000. CHANGE NOTE 165. ADD NOTES 172 AND 173. CHANGE LIST W TO DA. ADD NOTE REFERENCE TO TABLE A LISTS DG, DH, DJ, AND DK. ADD LIST BE TO TABLE A DESCRIPTIONS FOR LISTS FA AND FP. CHANGE LISTS 7A, 41B, 44B,65B, 67B, AND 79 TO DA. ADD LISTS 79A AND 85. UPDATE TABLE A DESCRIPTIONS FOR LISTS FC, FE, FH, FK, FR, AND FW. LISTS 25D, 25E, 25H, AND 25I CHANGED TO DA. ADDED LISTS 25J, 25K, 25L, AND 25M. ADDED STOCKLIST ITEMS 3008 AND 3009. CHANGE DRAWING REF IN NOTE 80. MODIFY TABLE A DESCRIPTION AND DRAWING REFERENCES FOR LISTS 20C, DA, DB, DC, DD, DE, DF, DG, DH, AND 83. LISTS 42C,42D,66,66B,72,72A,GC, AND GD ARE CHANGED TO DA. ADD LISTS 42E,42F,66C, AND 72B. MODIFIED NOTES 19, 43, AND 44. ADD SL ITEMS 5051, 5052, 5053, 5062, 5071, 6132, AND 6151. MODIFIED SL ITEMS 1015, 1185, 4060, 4065, 4440, 4450, 5020, 5030, 5036, 5061, 5450, 5460, 5466, 5580, 5590, 5870, 5890, 5920, 5941, 6080, 6110, 6116, 6128, 6860, AND 6870. CHANGE NOTE 46. LINE OUT SL ITEM 3260. ADD SL ITEMS 6152 AND 5072. ADD NOTES 101 AND 102. ADD NOTE REFERENCE TO SL ITEM 3005 AND 3008. LINE OUT SL ITEM 6000. CHANGE LIST CF TO DA. ADD LIST GE TO TABLE A AND ADD SL ITEM 9035.

ORIG ISS: 03/04/83 NDD NBR: NDD5D005NW-77 CHANGE CLASS: B

DRAFT: PEM	ENGR: PEM	SUPV: FNG	CERTIFIED: 03/25/97	ISSUE: 105

INCORPORATE POINT ISSUES 105.1, 105.2, 105.3, 105.4, AND 105.5.
105.5 REMOVED L8A FROM LIST COLUMN ON SL ITEMS 1961 AND 1970. ADD L5B & 5C TO LIST COLUMN ON SL ITEM 4760.
105.4 ADD SL ITEM 6133, 6134, AND 6135. REMOVED L66C FROM LIST COLUMN ON SL ITEM 6132. ADD L42E, 42F, 66C, & 72B AS MUTUALLY EXCLUSIVE IN ENG NOTE 92. UPDATED TABLE A REFERENCES FOR L66C, DL, DM, DN, AND DO.
105.3 CHANGE TABLE A REFERENCES FOR L42E, 42F, 66C, AND 72B. MODIFY SL ITEMS 4060, 5052, 5053, 5580, AND 9170.
105.2 CHANGE TABLE A REFERENCES FOR L42E, 42F, 66C, 72B, 1B, 51, AND AG. MODIFY SL ITEM 5051.
105.1 MODIFY TABLE A DESCRIPTION FOR LIST FW.
CHANGED LIST 27 TO DA. ADDED CO-LOCATED WIRELESS APPLICATIONS TO TABLE A DESCRIPTION FOR L55A.

ORIG ISS: 03/04/83 NDD NBR: NDD5D005NW-81 CHANGE CLASS: MF

DRAFT: PEM	ENGR: PEM	SUPV: FNG	CERTIFIED: 09/08/97	ISSUE: 106

COPYRIGHT @ 2001 LUCENT TECHNOLOGIES
ALL RIGHTS RESERVED

BT13

5ESS SWITCHING EQUIPMENT
SPECIFICATION FOR
MISCELLANEOUS CABINET

DWG SIZE C2 | ISSUE 117

LUCENT TECHNOLOGIES INC | J5D005C-1 | SHEET A4 OF 86

PRINTED IN U.S.A.

ENGINEERING NOTES

***** CONTINUED *******

EQUIPPED ON THAT CABINET.

67. THE LOCATION OF THE REMOTE ALARM RELAY UNIT(S) IS TO BE SPECIFIED BY THE LINE ENGINEER PER JOB CONDITIONS.

68. THE RESISTOR PANELS SHALL BE IDENTIFIED AS 0,1,2 OR 3 IN ACCORDANCE WITH THE QUANTITY OF PANELS SPECIFIED: WITHOUT 13A OR 13A+.

VERT EQL	IDENT
64	0
60	1
56	2
52	3.

AS ILLUSTRATED ABOVE, IF FOUR RESISTOR PANELS ARE EQUIPPED ON A CABINET, NO 13A OR 14A UNIT MAY BE MOUNTED. THIS CONDITION EXISTS DUE TO FUSE LIMITATIONS. SEE TABLE AD OR AG FOR 14A FUSE ASSIGNMENTS.

69. LISTS Z THRU AF ARE MUTUALLY EXCLUSIVE LISTS.

70. ADDITIONAL INVERTERS SHALL BE MOUNTED IN SUCCEEDING MISCELLANEOUS CABINETS, THE LOCATIONS ARE TO BE SPECIFIED BY THE LINE ENGINEER PER JOB CONDITIONS. TWO INVERTORS CAN BE MOUNTED IN A SINGLE MISCELLANEOUS CABINET. HOWEVER, 5ESS(R) GROUNDING RULES MUST BE FOLLOWED. OFFICE ALARM SCAN POINTS FOR THE SECOND INVERTOR ARE WIRED PER ED5D500-15,FIG 10,SHEETS C86 & C86A.

71. THERE ARE 24 FUSE POSITIONS PER BUS (A & B) AVAILABLE ON THE POWER DISTRIBUTION PANEL (ED83133-30,G1) THE FIRST 2 POSITIONS PER BUS ARE ASSIGNED TO THE MISCELLANEOUS CABINET, THE REMAINING 22 POSITIONS ARE TO BE JOB ASSIGNED. SEE DETAIL E FOR DESIGNATION CARD STAMPING INFORMATION.

72. LISTS AJ AND AK ARE MUTUALLY EXCLUSIVE.

73. A MAXIMUM OF 3 TRM'S MAY BE CONNECTED TO A LSCIM (ED8C010-50) MODULE.

74. THE TRCU AND /OR TRCU2 UNITS SHOULD BE MOUNTED FROM THE LOWEST POSITION (019-000) UP TO THE HIGHEST POSITION. A 3-FAN FAN UNIT IS REQUIRED FOR EITHER THE TRCU OR TRCU2 UNITS. LISTS 24 AND 40, 24A AND 40A,24B AND 40B,24C AND 40B ARE MUTUALLY EXCLUSIVE AND MAYBE SHOP MOUNTED.
FUSE WIRING WILL BE MADE BY THE SHOP WHEN TRCU'S ARE SHOP MOUNTED AND NEED NOT BE ASSIGNED BY THE LINE ENGINEER.
THE TRCU2 UNIT IS TO BE ORDERED ON A PER JOB BASIS.
(SEE J5D003ED-2 FOR CIRCUIT PACK AND LABING CONFIGURATION).

75. $A TWO INCH SPACE IS REQUIRED BELOW THE INVERTER FOR AIRFLOW AND MOUNTING CONSTRAINTS. A THREE INCH SPACE IS REQUIRED AT THE TOP OF THE INVERTER TO ALLOW FOR THE INPUT OF POWER WIRING.$

76. 14A ANNOUNCEMENTS MAY BE USED IN PLACE OF 13A'S OR 13A+'S IN CONJUNCTION WITH 13A'S OR 13A+'S. A ONE INCH SPACE IS REQUIRED BETWEEN 14A UNITS AND TWO INCHES BETWEEN OTHER EQUIPMENT THE UNITS THEMSELVES ARE TWO INCHES.

77. DOLLAR SIGNS ($) IN FRONT OF AND BEHIND WORDS, SENTENCES, PARAGRAPHS AND/OR CHARACTERS INDICATE HORIZONTALLY LINED OUT INFORMATION.

78. TO FULLY COMPLEMENT ONE ME922 MODEM ELIMINATOR, WHICH CONTAINS TWO CIRCUITS PER PACK, TWO MC5D109A1 (TN1087) CIRCUIT PACKS ARE REQUIRED.

79. IN TABLE A DESCRIPTION FIELD INFORMATION ENCLOSED IN < > IS FOR REPORT PURPOSES ONLY.

80. FOR INFORMATION REQUIRED BY INSTALLATION AND/OR MANUFACTURING FOR INSTALLATION OF POWER WIRING FOR UNITS, REFER TO ED5D505-10.

81. FOR POWER FEEDER CABLES AND TERMINALS REQUIRED AT THE ED83024-30 DISTRIBUTION PANEL, SEE ED5D073-11, TABLES J AND R AS REQUIRED.

82. AN ED5D669-30 RETROFIT KIT IS AVAILABLE FOR MISCELLANEOUS CABINETS WHICH ARE NOT CURRENTLY EQUIPPED WITH REMOVABLE BRACKETS TO ACCOMODATE A 3-FAN FAN UNIT. THIS KIT MAY BE USED FOR ALL EXISTING CABINETS ORDERED PRIOR TO ISSUE 52, EXCEPT THOSE EQUIPPED WITH LISTS 2,20,26 OR 27.

83. IF OFFICE IS ORDERED AFTER SEPTEMBER 27, 1986, LIST Z SHOULD NOT BE SPECIFIED FOR OFFICE GROWTH SINCE ALL OFFICES SHIPPING AFTER THE ABOVE DATE WILL BE EQUIPPED WITH IMPROVED CABINETS.
LIST Z WILL BE RERATED TO 'DA' ON JULY 1, 1989.

84. $AT THE START OF ACCEPTANCE TESTING, THE UAF233 AIR FILTER, EQUIPPED ON THE J5D003BE FAN UNIT, IF SPECIFIED, MUST BE REPLACED. THIS AIR FILTER IS ORDERED ON THE SFM392X SPEC.$

---------- CONTINUED ON NEXT SHEET ----------

ENGINEERING NOTES

51. INFORMATION FURNISHED PER THIS DRAWING IS IN ACCORDANCE WITH LUCENT PRACTICES - NONE.

52. THIS DOCUMENT CONTAINS COMPLETE ENGINEERING INFORMATION FOR THE SUBJECT EQUIPMENT. JOB INFORMATION SHALL BE RECORDED BY LIST OR GROUP. LINE ENGINEERING MAY DEVIATE FROM LISTS SHOWN HEREIN AND SPECIFY A MINIMUM BARE CABINET EQUIPPED WITH ONLY A FUSE/FILTER UNIT. REMAINDER OF CABINET MAY BE LINE ENGINEERED PER JOB CONDITION.

53. $THE KS-20816,LIST 1,A INVERTER IS REQUIRED TO PROVIDE EMERGENCY 120V AC SUPPLY. IT WILL BE MOUNTED IN THE FIRST MISCELLANEOUS CABINET IN AN OFFICE. IF GREATER CAPACITY IS REQUIRED, ADDITIONAL INVERTERS MAY BE SPECIFIED. THE EMERGENCY AC IS REQUIRED FOR THE DATA SET CABINET AND TELETYPEWRITER EQUIPMENT LOCATED AT THE MCC$

54. SEE ED-5D021-12 FOR AC POWER DISTRIBUTION.

55. ONE DIAL TONE DELAY CIRCUIT IS REQUIRED PER SYSTEM.

56. ONE ALARM UNIT IS REQUIRED PER SYSTEM.

57. THE FUSE POSITION SUPPLYING -48V FILTERED POWER TO THE 13A,13A+, 14A ANNOUNCEMENT SYSTEMS UNITS MUST BE ISOLATED FROM OTHER FUSES. THE 13A & 13A+ & 14A HAS BUILT IN FILTER CAPABILITY.
$AND DOES NOT REQUIRE THE J5D005CA-1 FILTER UNIT.$
ADDITIONAL FUSES MUST BE USED FOR EACH ADDITIONAL 13A OR 13A+ ANNOUNCEMENT SYSTEM, ALONG WITH A SEPERATE FUSE FOR EACH ADDITIONAL 14A CHANNEL AND LINE UNIT INTERFACE.

58. SEE ED-5D500-11 & ED5D500-21 FOR SYSTEM INTERCABINET CABLING AND ED5D505-10 FOR INTRA CABLING CONNECTING INFORMATION.

59. ONE J5D005C-1,L16,16A OR 16B UNIT IS REQUIRED FOR VISUAL ALARM CONDITIONS,AN ADDITIONAL J5D005C-1,L16,16A OR 16B UNIT IS REQUIRED FOR AUDIBLE ALARM CONDITIONS.

60. 13A OR 13A+ RECORDED ANNOUNCEMENT UNITS MAY BE EQUIPPED ON ANY MISCELLANEOUS CABINET EXCEPT THOSE CABINETS TO BE EQUIPPED WITH LISTS 2,4,5,5A,8,8A,24,24A,24B,25,25A,25B,26,26A OR 40,40A,40B.
MAXIMUM OF FOUR RECORDED ANNOUNCEMENT UNITS CAN BE EQUIPPED PER MISCELLANEOUS CABINET.
LINE ENGINEER MUST DETERMINE TYPES AND QUANTITY OF CHANNELS REQUIRED AND SPECIFY LISTS AS REQUIRED PER J1C121A-2. IF FEWER THAN FOUR 13A RECORDED ANNOUNCEMENT UNITS ARE REQUIRED, RESISTOR PANELS MAY ALSO BE EQUIPPED. MOUNT 13A OR 13A+ ANNOUNCEMENT AT EQL 20 OR LOWEST POSSIBLE EQL.

RESISTOR PANEL (LIST 3 OR 17 OR 17A) QTY	VERT EQL	QTY	13A OR 13A RA UNIT (LIST 7 OR 7A) VERT EQL
0	-	4	20,30,40,50
1	60	3	20,30,40
2	60,56	2	20,30
3	60,56,52	1	20
4	64,60,56, 52.	0	--

$A J5D005CA-1 UNIT IS REQUIRED FOR ANY MISCELLANEOUS CABINET WHICH IS EQUIPPED WITH 13A RECORDED ANNOUNCEMENT UNITS AND SHALL BE MOUNTED AT VERTICAL EQL 64.$

61. 14A RECORDED ANNOUNCEMENT UNITS MAY BE EQUIPPED ON ANY MISCELLANEOUS CABINET EXCEPT THOSE CABINETS TO BE EQUIPPED WITH LISTS 2,4,8,24,25,26 OR 40. THERE IS A MAXIMUM OF EIGHTEEN 14A'S THAT CAN BE EQUIPPED PER CABINET. FUSING FOR 13A AND 13A+ AND 14A ANNOUNCEMENTS MAY BE INTERMIXED.

62. SEE SD-5D044-01 EQUIPMENT NOTES AND SD-5D007-01 FOR RESISTOR NETWORK REQUIREMENTS AND ASSIGNMENT RULES. LINE ENGINEER WILL DETERMINE QUANTITIES OF RESISTOR NETWORKS. THE INSTALLER WILL DETERMINE THE RESISTANCE VALUE AND PURCHASE THE RESISTORS FROM A LOCAL SOURCE FOR THE NETWORKS THAT ARE REQUIRED AT THE TIME OF INSTALLATION PER LOCAL OFFICE REQUIREMENTS.

63. $THE LINK ADAPTER UNIT (LAU, J5D003FG-1) SHALL BE LIMITED TO A MAXIMUM OF 2 PER CABINET, AND IS MUTUALLY EXCLUSIVE TO ALL LISTS EXECPT LISTS 1, T, Y, AA THRU AF, AND AM. THESE RESTRICTIONS ARE DIRECTLY RELATED TO THE AMOUNT OF HEAT GENERATED BY THESE UNITS AND THE FACT THAT THE MISCELLANEOUS CABINET DOES NOT HAVE A FAN UNIT AT THIS TIME.$

64. $FOR RSM OFFICES, FIG 3 INDICATES A TYPICAL MISCELLANEOUS CABINET LAYOUT. ONE EACH OF LISTS 1,6,7,9,17 AND 20 IS REQUIRED. HOWEVER, LIST 9 IS NOT REQUIRED FOR MULTI-MODULE RSM OFFICES. AN ALARM STATUS PANEL, ED-5D586-10 WILL BE EQUIPPED ON THE SMC CABINET.$

65. LISTS 5,8,8A AND 9,9A,9B,9C ARE MUTUALLY EXCLUSIVE.

66. WHEN FOUR RESISTOR PANELS ARE PROVIDED, NO OTHER UNITS MAY BE

------ CONTINUED TO THE LEFT ------

ISSUE NOTES (CONTINUED)

(V00055) ADDED: EN NOTE 191; TBL AJ; SL ITEMS 9835 THRU 9878; L83A,91A,93A,102 THRU 107,HE; SHT B17.
CHGD: ADDED L83A TO SL ITEM 7120; ADDED L91A TO SL ITEMS 6420,7090,9380,9390,9400,9410,9420,9824, 9430,9825; ADDED L93A TO SL ITEMS 6411,6420, 7090,9530,9824,9825; ADDED L102 TO SL ITEMS 7090,9824,9825; ADDED L104 TO SL ITEM 7110; ADDED EN191 REF TO L107; RMVD EN500 FROM LGO; L83,91,93 RATING WAS STANDARD; ADDED L100 TO LGJ DESC; LINED OUT SL ITEMS 9440,9450; L91,93 RMVD FROM SL ITEM 6470; L93 RMVD FROM SL ITEM 6480.

ORIG ISS: 03/04/83 NDD NBR: WS0000213 CHANGE CLASS: B

DRAFT: DRH	ENGR: DRH	SUPV: FNG	CERTIFIED: 09/13/00	ISSUE: 115

THIS ISSUE INCORPORATES THE FOLLOWING WORK THAT WAS PREVIOUSLY STATED IN ISSUE NOTE 115 BUT NOT TRANSFERED FROM FOCUS PDD TO J MANAGER.
(V00055) ADDED: SL ITEM 9878.
CHGD: ADDED L91A TO SL ITEM 9824; ADDED EN191 REF TO L107; RMVD EN500 FROM LGO; ADDED L100 TO LGJ DESC.

ORIG ISS: 03/04/83 NDD NBR: V00055 CHANGE CLASS: B

DRAFT: DRH	ENGR: DRH	SUPV: FNG	CERTIFIED: 09/14/00	ISSUE: 116

(H09113) ADDED EN192.

ORIG ISS: 03/04/83 CHANGE CLASS: B

DRAFT: DRH	ENGR: DRH	SUPV: FNG	CERTIFIED: 03/23/01	ISSUE: 117

COPYRIGHT @ 2001 LUCENT TECHNOLOGIES
ALL RIGHTS RESERVED

BT13

5ESS SWITCHING EQUIPMENT
SPECIFICATION FOR
MISCELLANEOUS CABINET

DWG SIZE C2 | ISSUE 117

LUCENT TECHNOLOGIES INC | J5D005C-1 | SHEET A5 OF 86

PRINTED IN U.S.A.

ENGINEERING NOTES

***** CONTINUED *******

65	41
66,72	42C,42D
67	44
68	46B
69	48A
CJ	CB

153. THE LINE ENGINEER SHALL ORDER CABINET ADDRESS LABELS PER E5D695-11. THESE LABELS ARE MOUNTED TO INDENTATION FORMED INTO THE INDICATOR STRIP OF THE CABINET.

154. LIST CJ SPECIFIES GASKETING MATERIAL TO PROVIDE ELECTROMAGNETIC COMPATIBILITY TREATMENT FOR APPLICATIONS SENSITIVE TO RADIO/TV INTERFERENCE SUCH AS PBX, RSM/ORM/TRM IN RESIDENTIAL AREAS AND OTHER CUSTOMER PREMISE APPLICATIONS. ADDITIONAL MATERIAL REQUIRED TO COMPLETE THE EMC INSTALLATION CAN BE ORDERED FROM ED5D741-70.

155. THESE LISTS ARE MUTUALLY EXCLUSIVE FOR THE SM2000 SWITCH CABINET. ONLY ONE OF THESE SIX LISTS MAY BE ORDERED.
63,64,66,70,71,72

156. $FOR 5ESS-2000 CABINETS REQUIRING EMC SHIELDS, THE LINE ENGINEER MUST SPECIFY THE APPROPRIATE SHIELDING PER ED5D741-70, GROUPS 3 THROUGH 11A, OR ED5D744-70, GROUPS 1 THROUGH 9. DEPENDENT ON THE PHYSICAL LOCATION OF THE CABINET IN THE OFFICE.$

157. THE 16A SHELF WITH BLD10 (LIST 78 LOCATED IN POS 0, TOP LEFT) DIGITAL INTERFACE THAT FRAMES AND FORMATS INTO DS1 FORMAT, CAN BE POPULATED WITH 1,2 OR 3 BLD3'S (LIST 87 LOCATED IN POS 1 TOP RIGHT, 2 BOTTOM LEFT AND 3 BOTTOM RIGHT.) TO PROVIDE 8, 16 OR 24 CHANNELS WITH 60 SECONDS EACH OF RECORD/REPRODUCE ANNOUNCEMENT. EACH OF THESE OPTIONS CAN BE PROVIDED WITH REMOTE RECORD CAPABILITY BY INCLUDING A 400B (LIST 58) WITH EACH BLD3.

158. THE FUNCTIONAL EQUIVALENT FOR LIST 60 IS EITHER LIST 60A OR 60B DEPENDENT UPON THE NEED FOR EMC SHIELDING TREATMENT.

159. THE FUNCTIONAL EQUIVALENT FOR LISTS 60A OR 60B IS LIST 60C.

160. THE FUNCTIONAL EQUIVALENTS FOR LISTS 63 AND 64 ARE LISTS DC, DD, DG OR DH.

161. THE FUNCTIONAL EQUIVALENTS FOR LIST 70 ARE LISTS DN AND DO.

162. THE FUNCTIONAL EQUIVALENTS FOR LIST 71 ARE LISTS DL AND DM.

163. LISTS RATED "LA" REPRESENT PHASE 1A, 5ESS-2000 SWITCH CABINET HARDWARE AVAILABLE ONLY TO NTT AND OTHER SELECTED CUSTOMERS.

164. $15A OR 16A RECORDED ANNOUNCEMENT SYSTEMS MAY BE EQUIPPED ON ANY MISCELLANEOUS CABINET EXCEPT THOSE EQUIPPED WITH LISTS 8A,25D, 25E,26A OR 40B. 13A, 13A+, 14A, 15A AND 16A RECORDED ANNOUNCEMENT SYSTEMS MAY BE MIXED ON THE SAME MISCELLANEOUS CABINET AS LONG AS THE MAXIMUM NUMBER OF ANY ONE TYPE IS NOT EXCEEDED.
.

SYSTEM TYPE	MAX. NUMBER PER CABINET	CHANNELS PER UNIT	CHANNELS PER CAB.
13A	4	8	32
13A+	4	8	32
14A	16	2	32
15A	16	16	156
16A	16	24	384

.
FUSING MAY BE MIXED AND IS TO BE ASSIGNED ON A JOB BASIS.$

165. THE FOLLOWING LISTS ARE MUTUALLY EXCLUSIVE. ONLY ONE OF THESE EIGHT LISTS MAY BE ORDERED.
DC, DD, DE, DF, DL, DM, DN, DO

166. THE FOLLOWING MUST BE PROVIDED IN ADDITION TO LISTS 80 AND 82 FOR CENTRAL AND REMOTE SITES.
1 PARADYNE 3810 OR 3811 MODEM OR EQUIVALENT. NOTE: MODEMS MUST BE PROVIDED WITH AN ACCEPTABLE PROTECTED AC POWER SUPPLY OF THE VOLTAGE AVAILABLE AT THE SITE. (I.E. 110V, 60HZ, 220V,50HZ, 100V,50-60HZ) OR -48VDC WHERE APPROPRIATE. IF AN EQUIVALENT MODEM IS PROVIDED IT SHALL BE JOB ENGINEERED PER CUSTOMER REQUIREMENTS.
.
1 MODEM CABLE PER ED5D505-11,G62 FOR CONNECTION FROM MODEM TO THE DISTRIBUTING FRAME.

167. THE FOLLOWING MUST BE PROVIDED IN ADDITION TO LIST 82 FOR CENTRAL SITES.
1 715/4425 TERMINAL OR EQUIVALENT WITH AN ACCEPTABLE AC POWER SUPPLY OF THE VOLTAGE AVAILABLE AT THE SITE. (I.E. 110V,60HZ, 220V,50HZ, 100V,50-60HZ ETC.). IF AN EQUIVALENT TERMINAL IS PROVIDED IT SHALL BE JOB ENGINEERED PER CUSTOMER REQUIREMENTS. A PARTIAL LIST OF

---------- CONTINUED ON NEXT SHEET ----------

ENGINEERING NOTES

***** CONTINUED *******

1A	1B
5	5A
7	7A
9A,9C	9B
16	16A
17	17A
20A	20B
22	22A
23	23A
24B	24C
25D	25E
25B	25C
25F	25G
27	27A
28	28A
29A	29B,29C
40A	40B
42B	42C,42D
46A	46B
55	55A
AK	CC
AN	CA
BM	CD,CK
AD	CE

98. THE NEW 13A+ RECORDED ANNOUNCEMENT UNIT DOES NOT REQUIRE A INDUCTOR UNIT (J5D005CA-1).

99. LIST CB SPECIFIES DOORS AND GASKETING MATERIAL TO PROVIDE ELECTROMAGNETIC COMPATIBILITY TREATMENT FOR APPLICATIONS SENSITIVE TO RADIO/TV INTERFERENCE SUCH AS PBX, RSM/ORM/TRM IN RESIDENTIAL AREAS AND OTHER CUSTOMER PREMISE APPLICATIONS. ADDITIONAL MATERIAL REQUIRED TO COMPLETE THE EMC INSTALLATION CAN BE ORDERED FROM ED5D184-76.

100. LISTS CB AND BP ARE MUTUALLY EXCLUSIVE.

151. THE FUSE LISTED BELOW ARE 5ESS APPROVED FOR USE IN TH NEW MODULAR FUSE/FILTER UNIT (MFFU). THE PROTECTION PROVIDED BY THE FUSE SELECTED IS BASED ON THE FUSING CHARACTERISTICS DESCRIBED IN THE "WP" SPECIFICATION NOTED. FUSE SELECTION MUST BE BASED ON A BALANCE BETWEEN "NUISANCE BLOWING" AND FIRE PROTECTION, AND IS THE RESPONSIBILITY OF THE SPECIFIER.
ALL MFFU FUSE BLOCKS WILL ACCOMMODATE WP-91768 FAST ACTING (NORMAL BLOW) OR WP92458 VERY FAST ACTING (FAST BLOW) FUSE. FUSE SELECTION MUST COMPLY WITH 5ESS POWER CONSULTANT RECOMMENDATIONS AND MUST BE LISTED BELOW.

FUSE SELECTION TABLE

PACKAGE	COMCODE	WP-SPEC	SIZE	DESCRIPTION
BULK	406663971	WP-91768,L104	0.50 A	FAST ACTING
SINGLE	406747501	WP-91768,L104	0.50 A	FAST ACTING
BULK	406599308	WP-92458,L2	1.25 A	VERY FAST ACTING
SINGLE	406747519	WP-92458,L2	1.25 A	VERY FAST ACTING
BULK	406708545	WP-91768,L107	2.00 A	FAST ACTING
SINGLE	406747527	WP-91768,L107	2.00 A	FAST ACTING
BULK	406693895	WP-91768,L108	3.00 A	FAST ACTING
SINGLE	406747535	WP-91768,L108	3.00 A	FAST ACTING
BULK	406693887	WP-91768,L110	5.00 A	FAST ACTING
SINGLE	406747543	WP-91768,L110	5.00 A	FAST ACTING
BULK	406693903	WP-91768,L112	7.00 A	FAST ACTING
SINGLE	406747550	WP-91768,L112	7.00 A	FAST ACTING
BULK	406599324	WP-92458,L11	10.0 A	VERY FAST ACTING
SINGLE	406747568	WP-92458,L11	10.0 A	VERY FAST ACTING
BULK	406599332	WP-92458,L12	12.0 A	VERY FAST ACTING
SINGLE	406747576	WP-92458,L12	12.0 A	VERY FAST ACTING

? >>SPECIAL APPLICATION FUSE<< ?
THE FOLLOWING FUSES REQUIRE APPROVAL FROM THE 5ESS POWER CONSULTANT AND IMPACT THE 5ESS POWER DISTRIBUTION.

BULK	406599357	WP-92458,L13	15.0 A	VERY FAST ACTING
SINGLE	406808469	WP-92458,L13	15.0 A	VERY FAST ACTING
BULK	406759050	WP-92458,L14	20.0 A	VERY FAST ACTING
SINGLE	406808477	WP-92458,L14	20.0 A	VERY FAST ACTING

152. THE FOLLOWING GROUPS OF LISTS ARE MUTUALLY EXCLUSIVE. THE LISTS IN THE FIRST COLUMN ARE FOR THE SM2000 CABINET AND THE LISTS IN THE SECOND COLUMN ARE FOR THE CLASSIC CABINET. ONLY LISTS FROM ONE COLUMN MAY BE ORDERED.

SM2000 CAB	CLASSIC CAB
60,60A,60B,60C	1B
61	10A
62,62A	BP
63,70	CD,CK
64,71	29B,29C

------ CONTINUED TO THE LEFT ------

ENGINEERING NOTES

***** CONTINUED *******

85. THE WP91652,L20, OR L20A INVERTER (L41, 65, 41A, OR 65A) IS REQUIRED TO PROVIDE EMERGENCY 120V AC SUPPLY. IT WILL BE MOUNTED IN THE FIRST MISCELLANEOUS CABINET IN AN OFFICE. IF GREATER CAPACITY IS REQUIRED, ADDITIONAL INVERTERS (L44, 44A, 67, OR 67A) SHOULD BE SPECIFIED. THE EMERGENCY AC IS REQUIRED FOR THE DATA SET CABINET AND TELETYPEWRITER EQUIPMENT LOCATED AT THE MCC.

86. THE 30DW (103289526) VOICE COUPLER IS TO BE JOB ENGINEERED PER CUSTOMER REQUIREMENTS. CABLE LENGTHS TO THE COUPLER SHALL BE DETERMINED BY INSTALLER. TO BE LOCATED AT SOURCE OF MUSIC. THIS COUPLER IS REQUIRED WITH LIST 46.

87. THE MUSIC-ON-QUEUE UNITS (J1A033GR-1 & J1A033GU-1), SHOULD NOT BE MOUNTED IN MISCELLANEOUS CABINETS WHERE LAU UNITS (J5D003FG-1), TRCU UNITS (J5D003ED-1), TRCU2 UNITS (J5D003ED-2), OR 3 FAN-FAN UNITS (J5D003BE-2) ARE EQUIPPED.

88. THE MUSIC-ON-QUEUE UNITS (J1A033GR-1 & J1A033GU-1), MUST BE JOB ENGINEERED AND EQL INFORMATION IS REQUIRED, BY THE MANUFACTURER, ON ALL ORDERS.

89. RESERVED

90. 13A+ AND 14A ANNOUNCEMENT UNITS DO NOT REQUIRE FAN UNITS. A FAN UNIT IS REQUIRED ONLY WHEN A FOURTH 13A (J1C121A-1) UNIT IS EQUIPPED.

91. FOR ENGINEERING THE FIBER OF THIS SHELF SEE LGX (TRADE MARK) DISTRIBUTION SYSTEM (SYSTEM REFERENCE GUIDE) AT&A 636-299-120 AND AT&T CATALOG LIGHTGUIDE FIBER OPTIC CABLE AND APPARATUS CALL 1-800-824-1931 FOR TECHNICAL ASSISTANCE.

92. LISTS 29A & 29B & 29C & 60 - 60B ARE MUTUALLY EXCLUSIVE, LISTS 42B,42C,42D,66,72,BM,CD,CK,$BNS, 29B & CD, 29C & CK ARE MUTUALLY EXCLUSIVE. LISTS 42E, 42F, 66C, AND 72B ARE MUTUALLY EXCLUSIVE.

93. THE 36A (103558961) VOICE COUPLER IS TO BE JOB ENGINEERED PER CUSTOMER REQUIREMENTS. CABLE LENGTHS TO THE COUPLER SHALL BE DETERMINED BY THE INSTALLER. TO BE LOCATED AT SOURCE OF MUSIC. THIS COUPLER IS REQUIRED WITH LIST 46A OR 46B OR 68.

94. LIST BS IS FOR REPLACEMENT OF EXISTING EQUIPMENT AND IS NOT TO BE ORDERED FOR NEW ORDERS. THE RECOMMENDED AIR FILTER IS STILL THE UAF233 FILTER UNLESS THE OFFICE BUILDING FILTRATION LEVEL IS ABOVE 50% ASHREA DUST SPOT EFFICIENCY.

95. THE REMOTE RECORD UNIT,LIST 52,52A MAY BE EQUIPED IN ANY MISCELLANEOUS CABINENT EQUIPPED WITH LIST 7,7A (13A OR 13A+) OR LIST 27,27A (14A). MAXIMUM OF TWO REMOTE RECORD UNITS CAN BE EQUIPPED PER MISCELLANEOUS CABINET. LINE ENGINEER MUST DETERMINE TYPES AND QUANTITY OF CHANNELS REQUIRED AND SPECIFY LISTS AS REQUIRED PER J1C259A-1. THE UNITS THEMSELVES ARE 2 INCHES HIGH.

QTY	VERT EQL
1	11
2	11,14

96. THE REMOTE RECORD CONCENTRATOR UNIT MAY BE EQUIPPED IN ANY MISCELLANEOUS CABINENT EQUIPPED WITH LIST 52,52A. MAXIMUM OF ONE REMOTE RECORD CONCENTRATOR UNITS CAN BE EQUIPPED PER MISCELLANEOUS CABINET. LINE ENGINEER MUST DETERMINE TYPES AND QUANTITY OF CHANNELS REQUIRED AND SPECIFY LISTS AS REQUIRED PER J1C262A-1. THE UNITS THEMSELVES ARE 2 INCHES. REMOTE RECORD CONCENTRATOR (LIST 53,53A).

QTY	VERT EQL
1	8

97. THE FOLLOWING GROUPS OF LISTS ARE MUTUALLY EXCLUSIVE. THE LISTS IN THE FIRST COLUMN ARE FOR THE FUSE FILTER (J5D003AU-1) AND THE LISTS IN THE SECOND COLUMN ARE FOR THE MODULAR FUSE FILTER UNIT (J5D003FJ-1). ONLY LISTS FROM ONE OF THE COLUMNS MAY BE USED.

FUSE FILTER	MODULAR FUSE FILTER

------ CONTINUED TO THE LEFT ------

COPYRIGHT @ 2001 LUCENT TECHNOLOGIES
ALL RIGHTS RESERVED

BT13

5ESS SWITCHING EQUIPMENT
SPECIFICATION FOR
MISCELLANEOUS CABINET

DWG SIZE C2 | ISSUE 117

LUCENT TECHNOLOGIES INC | J5D005C-1 | SHEET A6 OF 86

PRINTED IN U.S.A.

ENGINEERING NOTES

***** CONTINUED *******

7.8" LG. MOUNTING BRACKET LISTS DR,DS,DT, AND DU ARE REQUIRED FOR INDIVIDUAL 5ESS MISCELLANEOUS CABINET EQUIPMENT LISTS. CUSTOMERS REQUIRING 25" MOUNTING BRACKETS FOR THEIR APPLICATIONS SHOULD ORDER LISTS DR OR DS INDIVIDUALLY FOR EACH 8.5" CABINET EQUIPMENT LOCATION (MAX 7 LDR OR LDR PER CABINET). CUSTOMERS REQUIRING 23" MOUNTING BRACKETS FOR THEIR APPLICATIONS SHOULD ORDER LISTS DV OR DW INDIVIDUALLY FOR EACH 8.5" CABINET EQUIPMENT LOCATION (MAX 7 LDV OR LDW PER CABINET).

188. THE VERY COMPACT DIGITAL EXCHANGE (VCDX) ADMINISTRATIVE WORKSTATION FEATURE FOR THE 5ESS-2000 MISCELLANEOUS CABINET IS ORDERED FROM THE LATEST VERSION OF DRAWING ED5D764-35.

189. THE DISTINCTIVE REMOTE MODULE (DRM) FEATURE OF THE 5ESS MISCELLANEOUS CABINET IS LINE ENGINEERED PER INDIVIDUAL JOB REQUIREMENTS USING THE LATEST ISSUE OF DRAWING ED5D873-30 IN ADDITION TO LIST 60C (5ESS-2000 CABINET) OF THIS DRAWING.
.
THE DISTINCTIVE REMOTE MODULE (DRM) NETWORKING FEATURE OF THE 5ESS MISCELLANEOUS CABINET IS LINE ENGINEERED PER INDIVIDUAL JOB REQUIREMENTS USING THE LATEST ISSUE OF DRAWING ED5D874-30 IN ADDITION TO LIST 60C (5ESS-2000 CABINET) OF THIS DRAWING.
.
THE HOST SITE CONFIGURATION OF THE DRM NETWORKING FEATURE CONSISTS OF ONE ASM WORKSTATION, ONE ETHERNET SWITCH, ONE TO THREE ROUTERS, AND IF MOUNTED IN THE SAME MISCELLANEOUS CABINET, REQUIRES LIST 100 (MODULAR FUSE FILTER UNIT J5D003FJ-1, L110) OF THIS DRAWING.
.
THE REMOTE SITE CONFIGURATION OF THE DRM NETWORKING FEATURE REQUIRES ONE PATCH PANEL, ONE DRM WORKSTATION, ONE ROUTER, AND ONE SPLITTER PANEL TO BE MOUNTED IN THE SAME MISCELLANEOUS CABINET, AND REQUIRES LIST 54 (MODULAR FUSE FILTER UNIT J5D003FJ-1, L115) OF THIS DRAWING.

190. THE INTERNET PROTOCOL-DATA SERVICE UNIT (IP-DSU) FEATURE OF THE 5ESS MISCELLANEOUS CABINET IS LINE ENGINEERED PER INDIVIDUAL APPLICATION REQUIREMENTS FOR EQUIPMENT AND CABINET MOUNTING LOCATIONS.
.
THE FIVE MUTUALLY EXCLUSIVE OPTIONAL IP-DSU PORT CABLE ASSEMBLIES ARE ORDERED INDEPENDANTLY AND ARE LISTED BELOW :
.

INTERFACE DESTINATION	EQUIPMENT REQUIRED	QTY RQD	DESCRIPTION
SAM16 OR MODEM STRAPPED FOR CONSTANT DTR	ED5P055-31,G137 ED5P055-31,G139 ED5P055-31,GG	1 1 1	"X" DIM CABLE AH MALE CONNECTOR CABLE
258 ADAPTER OR MOD TAP PATCH PANEL	ED5P055-31,G155 CC #408198133	1 1	258 ADAPTER 25 FOOT MODULAR CABLE
ORTRONICS PATCH PANEL	ED5P005-31,G137 ED5P055-31,G139 ED5P055-31,GG CC #406485755	1 1 1 1	"X" DIMENSION CABLE AH MALE CONNECTOR CABLE ORTRONICS PATCH PANEL
DUMB TERMINAL	ED5P055-31,G139 CC #408198133	1 1	AH MALE CONNECTOR 25 FOOT MODULAR CABLE

191. THE "7 R/E NOW" FIXED CONFIGURATION FEATURE OF THE 5ESS MISCELLANEOUS CABINET (J5D005C-1) CONSISTS OF EQUIPMENT DEFINED IN MISCELLANEOUS TABLE AJ AND SHOWN ON SHEET B17.
.
VCDX EXTERNAL CABINET CABLING, TERMINALS, AND PRINTERS ARE SPECIFIED AND ORDERED FROM DRAWING ED5D764-35.

192. THE "NO TEST TRUNK" (NTT) UNIT FEATURE OF THE 5ESS MISCELLANEOUS CABINET IS LINE ENGINEERED PER INDIVIDUAL JOB REQUIREMENTS USING THE LATEST ISSUE OF DRAWING ED5D896-30 IN ADDITION TO LIST 60C (5ESS-2000 CABINET) AND LIST 54 (MODULAR FUSE FITER UNIT) OF THIS DRAWING.

499. SUPPLEMENTAL ORDERING INFORMATION -
.
EACH CABINET MUST BE EQUIPPED WITH TWO DOORS WHICH ARE ORDERED PER ED5D785-70 (FOR A 5ESS-2000 FRAME) OR ED5D184-76 (FOR A 5ESS CLASSIC FRAME). THE CORRECT GROUP MUST BE SPECIFIED TO PROVIDE EMC OR NON-EMC DOORS AS REQUIRED BY JOB SPECIFICATION.
.
APPLICATIONS REQUIRING AN ALARM STATUS UNIT SHOULD SPECIFY THE UNIT PER ED5D586-10 OR ED5D678-10 AS APPROPRIATE.
.
EACH CABINET MUST BE EQUIPPED WITH TWO INDICATOR STRIP ASSEMBLIES WHICH ARE ORDERED PER ED5D785-70. THE CORRECT GROUP MUST BE

---------- CONTINUED ON NEXT SHEET ----------

ENGINEERING NOTES

***** CONTINUED *******

178. $15A & 16A RECORDED ANNOUNCEMENT SYSTEM POWER CABLES TO THE MFFU ARE ORDERD USING ED5D505-10.$

179. $THE TEST BUS CONTROL UNIT (TBCU) AND THE 3A SMSI TRANSLATOR UNIT ARE BEING ADDED TO THIS DRAWING FOR THE SOLE PURPOSE OF PROVIDING OKLAHOMA CITY A MEANS WITH WHICH TO ORDER UNITS FOR ITS 5ESS STANDARD APPLICATION DRAWING (J5DOO5Z-1,L81E). THE TBCU WILL ONLY OCCUPY CABINET EQL 35 AND THE 3A SMSI TRANSLATOR UNIT WILL ONLY OCCUPY CABINET EQL 26 FOR THIS APPLICATION. ORDERING OF THESE UNITS FOR OTHER APPLICATIONS IS PROHIBITED.$

180. THE MANUFACTURER "TELECOM SOLUTIONS" DIGITAL CLOCK DISTRIBUTOR 523 (DCD-523) SYSTEM CONSISTING OF ONE #990-45230-01 MASTER SHELF AND ONE MODULAR MOUNTING PANEL IS SUPPLIED BY THE CUSTOMER FOR HIS NORTH AMERICAN APPLICATIONS.
THE DCD-523 OCCUPIES TWO 8.5" (17" TOTAL) VERTICAL EQUIPMENT LOCATIONS (EQL'S) AND CAN BE MOUNTED AT ANY HEIGHT WITHIN THE 5ESS-2000 CABINET.
IT IS MANDATORY, BECAUSE OF 5ESS SINGLE POINT GROUNDING RULES, THAT DIGITAL "GND" OR BATTERY "RTN" NOT BE CONNECTED TO "FRM" GROUND ON EITHER THE MASTER SHELF #990-45230-01 OR ANY GROWTH SHELF.
EMC AND NON-EMC OUTPUT CLOCK REFERENCE CABLES AND -48VDC POWER CABLES ARE ORDERED FROM DRAWING ED5D765-11.
DUE TO THE OUTPUT OF THE T1 CLOCK REFERENCE AND TO AVOID OVERDRIVING THE DATA SUBSCRIBER INTERFACE (DSI) DEVICE, THE OUTPUT CLOCK REFERENCE CABLE LENGTH CANNOT BE LESS THAN ONE HUNDRED FEET LONG.
THE TOTAL COMBINED MAXIMUM AMPERAGE OF ALL FOUR FUSES WITHIN A MODULAR FUSE FILTER UNIT (MFFU) FEEDER IS 13.5 AMPS.
REFERENCE "TELECOM SOLUTIONS" DIGITAL CLOCK DISTRIBUTOR 523 INSTALLATION MANUAL "TMSL 097-45230-09" FOR ALL OPERATING AND CONNECTIONS PROCEDURES.
THE "TELECOM SOLUTIONS" DIGITAL CLOCK DISTRIBUTOR 523 (DCD-523), OR ANY OTHER EXTERNAL NETWORK CLOCK SOURCE, IS NOT ENDORSED OR SUPPORTED BY LUCENT TECHNOLOGIES.

181. THE ADMINISTRATIVE SERVICES MODULE (ASM) SHELF ASSEMBLY CONSISTING OF ONE "SUN" NETRA-T WORKSTATION EQUIPPED WITH TWO (2) 18.2 GB DISK DRIVES, ONE (1) DDS3 TAPE DRIVE, CABLES, AND ASSEMBLY KIT ARE SPECIFIED IN ADDITION TO LIST 60C (5ESS-2000 CABINET) EQUIPPED WITH A MODULAR FUSE FILTER UNIT (MFFU) BY THE LINE ENGINEER USING THE LATEST ISSUE OF DRAWING ED5D839-30.

182. AC ESSENTIAL LOAD IS DEFINED AS "LOADS THAT SHALL OPERATE DURING PROLONGED LOSS OF COMMERCIAL POWER AND SHOULD BE CONNECTED TO THE STANDBY AC SYSTEM. TYPICAL INTERRUPTION TIMES RANGE FROM 10 TO 90 SECONDS FOR AUTOMATIC STANDBY PLANTS AND 15 OR MORE FOR MANUAL STANDBY PLANTS". (BELLCORE SPECIFICATION GR-513-CORE, ISS. 1, 9/1995, SEC. 4.1.3.1)

183. AC PROTECTED LOAD IS DEFINED AS "LOADS THAT SHALL OPERATE DURING A PROLONGED LOSS OF COMMERCIAL POWER AND CAN TOLERATE ONLY MINIMAL INTERRUPTION TIMES. THESE CAN VARY FROM A FEW MILLISECONDS TO APPROXIMATELY 5 SECONDS". (BELLCORE SPECIFICATION GR-513-CORE, ISS. 1, 9/1995, SEC. 4.1.3.1)

184. SPARE CIRCUIT PACKS FOR THE 17A ANNOUNCEMENT SYSTEM ARE ORDERED USING THE LATEST VERSION OF DRAWING J1C275A-1.

185. THE SIGNALING PROTOCOL CONVERTER (SPC) UNIT IS ORDERED FROM THE LATEST ISSUE OF 5ESS SWITCHING EQUIPMENT DRAWING ED5D875-30, MOUNTS IN THE 5ESS-2000 CABINET (LIST 60C OF THIS DRAWING), AND REQUIRES EMC FRAME ADDITION KIT ED5D785-70, GROUP 4B.

186. THE 15A,16A,17A,18A, AND REMOTE RECORD CONCENTRATOR ARE UL 1459 LISTED, COMPLY WITH FCC RULES AND REGULATIONS, ARE CSA CERTIFIED, AND HAVE PASSED ISO 9001 CERTIFICATION.
COMPATIBILITY OF THE ANNOUNCEMENT SYSTEM UNITS WITH OTHER 5ESS UNITS HAS NOT BEEN VERIFIED AT THIS TIME, BUT IT IS RECOMMENDED THAT "INORDER TO CAUSE MINIMUM INTERFERENCE TO THE AUDIO SIGNALS THE ANNOUNCEMENT SYSTEMS SHOULD NOT BE LOCATED IN THE SAME FRAME OR ADJACENT TO EQUIPMENT WHICH PRODUCES EXTRAORDINARY ELECTRICAL ACTIVITY (SUCH AS RINGING TONE EQUIPMENT OR INTERRUPTER CIRCUITS)
.
FUSING AND -48VDC POWER SUPPLY AT THE MODULAR FUSE FILTER UNIT MUST BE INDEPENDANT AND ISOLATED FOR EACH 15A CIRCUIT MODULE, 16A,17A,18A ANNOUNCEMENT SYSTEM UNIT, OR REMOTE RECORD CONCENTRATOR UNIT MOUNTED IN A 5ESS MISCELLANEOUS CABINET.
THE MIXING OF 15A,16A,17A,18A, AND REMOTE RECORD CONCENTRATOR UNITS IN THE SAME CABINET AND THE INDIVIDUAL FUSE ASSIGNMENTS ARE ASSIGNED ON AN INDIVIDUAL JOB BASIS.
FOR ADDITIONAL INFORMATION ON LUCENT TECHNOLOGIES' ANNOUNCEMENT SYSTEMS PRODUCTS AND SERVICES, PLEASE CALL 1-800-352-5563.

187. DUE TO INCREASED CUSTOMER DEMAND FOR UNRESTRICTED SHELF MOUNTING CAPABILITY WITHIN THE 5ESS CLASSIC (L1B) AND 5ESS-2000 (L60C) CABINET, 50.8" LG. MOUNTING BRACKETS (CC# 846167245) AND 7.8" LG. MOUNTING BRACKETS (CC# 846167237) WILL NOT BE PROVIDED AS STANDARD CABINET EQUIPMENT.

------ CONTINUED TO THE LEFT ------

ENGINEERING NOTES

***** CONTINUED *******

ACCEPTABLE EQUIVALENT TERMINALS IS AVAILABLE IN THE NJ00508 ALARM TELEMETRY SYSTEM PRODUCT MANUAL ADE-NJ00508PM-T. PER THE REQUIREMENTS OF THIS MANUAL THIS TERMINAL MAY ALSO BE OMITTED, IN SOME CASES, AT THE CUSTOMERS OPTION.

168. A -48VDC POWER SOURCE MUST BE PROVIDED FOR THE CENTRAL AND REMOTE TELEMETRY UNITS AND THE WALL MOUNTED AUDIBLE VISUAL ALARM UNIT. SEE SD5D017-01 FOR ACCEPTABLE EXTERNAL POWER SUPPLY IF NO OFFICE POWER IS AVAILABLE. IF A CUSTOMER PROVIDED SUPPLY IS UTILIZED IT SHALL BE JOB ENGINEERED PER CUSTOMERS REQUIREMENTS.

169. VERTICAL EQL STAMPING ON THE REAR OF THE CABINET UPRIGHTS MAY BE PARTIALLY OR COMPLETELY COVERED BY MOUNTING BRACKETS. THIS IS PERMISSIBLE AND RESTAMPING IS NOT REQUIRED.

170. WHEN LIST 81 IS PROVIDED THE 19" MOUNTING BRACKETS MUST BE REMOVED. THEREFORE NO OTHER EQUIPMENT NORMALLY AVAILABLE FOR USE IN THE MISCELLANEOUS CABINET CAN BE MOUNTED.

171. WHEN A SINGLE TRCU UNIT IS EQUIPPED IN A MISCELLANEOUS CABINET, TWO (2) LIST BE'S ARE REQUIRED. THE CABLE SUPPORTS SHOULD BE MOUNTED AT THE TOP AND BOTTOM EDGE OF THE UNIT. EACH ADDITIONAL TRCU UNIT MOUNTED ABOVE THE FIRST TRCU REQUIRES ONE (1) LIST BE. THE CABLE SUPPORT SHALL BE MOUNTED AT THE TOP EDGE OF THE UNIT. WHEN MOUNTING A TRCU IN THE TOP POSITION IN THE 5ESS 2000 CABINET NO (0) LIST BE'S ARE REQUIRED.

172. THESE LISTS ARE MUTUALLY EXCLUSIVE.
DG, DH

173. THESE LISTS ARE MUTUALLY EXCLUSIVE.
DJ, DK

174. THE TRANSMISSION RATE CONVERTER UNIT MODEL 3 (TRCU3) SHELF ASSEMBLY,CIRCUIT PACKS, FINAL ASSEMBLY KIT, AND REFERENCES TO CABLING DRAWINGS ARE SPECIFIED AS REQUIRED BY THE LINE ENGINEER PER THE LATEST ISSUE OF DRAWING J5D003EF-1.
UNTIL THE COMPLETION OF THE NEW MISCELLANEOUS CABINET DRAWING J5D005D-1, NEW AND EXISTING CONFIGURATIONS OF THE MISCELLANEOUS CABINET THAT SPECIFY A TRCU3 UNIT MUST INCLUDE THE REPLACEMENT OF THE THE TWO 50.8"LG.X 25" UNIT MOUNTING PLATE BRACKETS (COMCODE #846167245) WITH PAIRS OF 7.8"LG.X 25" UNIT MOUNTING BRACKETS (COMCODE #846167237) AS REQUIRED PER CONFIGURATION.
(REFERENCE OKLAHOMA CITY TEMPORARY INFORMATION MEMORANDUM (TIM) #98OC0088, AND NEW DEVELOPMENT DESCRIPTION (NDD) CASE #H8111)

175. THESE LISTS ARE MUTUALLY EXCLUSIVE :

CK	42E
CK	42F
GA	88
GA	91
GT	GU
GV	GW
GY	GX

176. LIST DR OR DS SHELF MOUNTING BRACKET CAN SUPPORT TWO OF THE FOLLOWING FOUR INCH (OR LESS) HIGH UNITS :
REMOTE ALARM RELAY UNIT (LIST 16B)
RESISTOR PANEL (LIST 17A)
TEL JACK UNIT (LIST 22A)

177. EQUIPMENT INSTALLED IN LUCENT TECHNOLOGIES 5ESS MISCELLANEOUS CABINET THAT IS NOT ORDERED FROM LUCENT TECHNOLOGIES "5ESS SWITCHING EQUIPMENT SPECIFICATION FOR MISCELLANEOUS CABINET" DRAWING J5D005C-1, OR SPECIFIED IN ITS ASSOCIATED "5ESS SWITCHING EQUIPMENT MISCELLANEOUS CABINET (6FT) CIRCUIT" DRAWING SD-5D130-01, IS THE RESPONSIBILITY OF THE PURCHASER FOR ITS OPERATION AND COMPLIANCE TO THE LATEST ISSUE OF BELLCORE'S GR-1089-CORE DOCUMENT "ELECTROMAGNETIC COMPATIBILITY AND ELECTRICAL SAFETY - GENERIC CRITERIA FOR NETWORK TELCOMMUNICATIONS EQUIPMENT", BELLCORE'S GR-63-CORE DOCUMENT "NETWORK EQUIPMENT-BUILDING SYSTEM (NEBS) REQUIREMENTS: PHYSICAL PROTECTION", AND UNDERWRITERS LABORATORIES UL 1950 DOCUMENT "SAFETY OF INFORMATION TECHNOLOGY EQUIPMENT, INCLUDING ELECTRICAL BUSINESS EQUIPMENT".

------ CONTINUED TO THE LEFT ------

COPYRIGHT @ 2001 LUCENT TECHNOLOGIES
ALL RIGHTS RESERVED

BT13

5ESS SWITCHING EQUIPMENT
SPECIFICATION FOR
MISCELLANEOUS CABINET

DWG SIZE C2 | ISSUE 117

LUCENT TECHNOLOGIES INC | J5D005C-1 | SHEET A7 OF 86

PRINTED IN U.S.A.

TABLE A-FEATURES

EQUIPMENT				EQUIPMENT OR CIRCUIT DATA					SD EQUIVALENT		
DESCRIPTION	REF NOTE	RAT-ING	LIST OR GROUP	QTY	EQUIPMENT OR CIRCUIT	L/G OR FIG	WRG	APP	SCHEMATIC	FIG	OPT
FRAMEWORK,ASSEMBLY,WIRING AND EQUIPMENT FOR ONE MISCELLANEOUS CABINET EQUIPPED WITH TWO FUSE/FILTER UNITS.		DA	1	1 2 1 1	SD5D130-01 J5D003AU-1 J5D003AU-1 J5D003AU-1	1 1,WH SA SB		Z			
FRAMEWORK, ASSEMBLY, WIRING AND EQUIPMENT FOR ONE MISCELLANEOUS CABINET EQUIPPED WITH TWO FUSE/ FILTER UNITS. FA EFF:01/15/93 FE:J5D005C-1,L1B	99 100	DA	1A	2 1 1 1 2 2	J5D003AU-2 J5D003AU-2 J5D003AU-2 ED5D184-74 ED5D695-10 J5D003AU-2	5,WG C,SF SG 7 ( ) E					
FRAMEWORK, ASSEMBLY, WIRING AND EQUIPMENT FOR ONE MISCELLANEOUS CABINET UTILIZING THE 5ESS CLASSIC CABINET. REPL:J5D005C-1,L1A	80 152 187		1B	1 2	ED5D184-74 ED5D695-10	7B ( )					
ASSEMBLY,WIRING AND EQUIPMENT REQUIRED IN ADDITION TO LIST 1 TO PROVIDE ONE DC TO AC INVERTER. (SEE NOTE 53 & 75).		DA	2	1	SD5D130-01	2	Q				
EQUIPMENT REQUIRED IN ADDITION TO LIST 1 TO PROVIDE FOR ONE RESISTOR PANEL. (MAXIMUM OF TWO OR FOUR LIST 3'S PER CABINET). (SEE NOTES 60,66 AND 68).		DA	3	1 1	SD5D130-01 J5D005AA-1	3,4 1					
ASSEMBLY,WIRING AND EQUIPMENT REQUIRED IN ADDITION TO LIST 1 TO PROVIDE DIAL TONE DELAY ALARM AND DISTRIBUTE POINT APPLIQUE UNITS. (SEE NOTE 55).		DA	4	1 1 1 1	SD5D130-01 J5D005AB-1 J3H001EF-1 J1A042BP-1	5 1 1 1,A, B					
ASSEMBLY,WIRING AND EQUIPMENT REQUIRED IN ADDITION TO LIST 1 OR 1A TO PROVIDE AN OFFICE ALARM UNIT FOR OFFICES REQUIRING UP TO 48 SCAN POINTS. DA EFF:07/18/94 FE/RA:NONE	56 65 80 97	DA	5	1 1	SD5D130-01 J5D005AD-1	7 1					
ASSEMBLY,WIRING AND EQUIPMENT REQUIRED IN ADDITION TO LIST 1B OR 60 TO PROVIDE AN OFFICE ALARM UNIT FOR OFFICES REQUIRING UP TO 48 SCAN POINTS.THIS PROVIDES FOR THE MODULAR FUSE FILTER UNIT. REPL:NONE DA EFF:04/14/94 FE:J5D005C-1,L5B	56 65 97	DA	5A	1 1 1	SD5D130-01 J5D005AD-1 ED5D734-14	7 1 21					
ASSEMBLY WIRING AND EQUIPMENT REQUIRED IN ADDITION TO LIST 1B OR 60-60C TO PROVIDE AN OFFICE ALARM UNIT WITH A DEAD SYSTEM ALARM FOR OFFICES REQUIRING UP TO 48 SCAN POINTS. THIS PROVIDES FOR A MODULAR FUSE/FILTER UNIT. REPL:J5D005C-1,L5A FE:J5D005C-1,L5C DA EFF:12/15/94		DA	5B	1 1 1	SD5D130-01 J5D005AD-1 ED5D734-14	7 1A 21					
ASSEMBLY, WIRING, AND EQUIPMENT REQUIRED IN ADDITION TO LIST 1B OR 60-60C TO PROVIDE AN OFFICE ALARM UNIT WITH A DEAD SYSTEM ALARM FOR OFFICES REQUIRING UP TO 48 SCAN POINTS. THIS PROVIDES FOR A MODULAR FUSE - FILTER UNIT. REPL:J5D005C-1,L5B DA EFF:04/23/99 FE:J5D005C-1,L5D		DA	5C	1 1 1	SD5D130-01 J5D005AD-1 ED5D734-14	7 1C 21					
OFFICE ALARM UNIT WITH A DEAD SYSTEM ALARM REQUIRED IN ADDITION TO 1B OR 60C FOR OFFICES REQUIRING UP TO 48 SCAN POINTS. THIS PROVIDES FOR A MODULAR FUSE FILTER UNIT. REPL:J5D005C-1,L5C	500		5D	1 1 1 2 1 2 1 1 1 2	SD5D130-01 J5D005AD-1 J5D005AD-1 J5D005AD-1 ED5D734-14 ED5D088-10 ED5D091-10 ED5D091-10 ED5D091-10 ED5D091-10	1 10 20 30 21 518 10 12 13 14					

TABLE-A CONTINUED

J5D005C-1

ENGINEERING NOTES

***** CONTINUED *******

SPECIFIED TO PROVIDE EMC OR NON-EMC COMPATIBLE INDICATOR STRIP ASSEMBLIES AS REQUIRED BY JOB SPECIFICATIONS WITH A <0,1,2,3> LED CONFIGURATION.
.
REPLACEMENT FILTERS, FUSES, APPARATUS BLANKS, UNIT GUIDE MOUNTING KITS, WARINING LABELS, FAN ASSEMBLIES, CABLE ROD (TOWEL BAR) KITS , AND UNIVERSAL PLENUM KITS CAN BE ORDERED FROM ED5D868-30, 5ESS SWITCH COMMON USE HARDWARE AND MATERIAL DRAWING.

500. THIS LIST OR GROUP MAY BE SPECIFIED AS A MAIN OR SUPPLEMENTAL ITEM.

COPYRIGHT @ 2001 LUCENT TECHNOLOGIES
ALL RIGHTS RESERVED

BT13

5ESS SWITCHING EQUIPMENT
SPECIFICATION FOR
MISCELLANEOUS CABINET

DWG SIZE C2 | ISSUE 117

LUCENT TECHNOLOGIES INC | J5D005C-1 | SHEET A8 OF 86

PRINTED IN U.S.A.

TABLE A-FEATURES(CONTINUED)

EQUIPMENT				EQUIPMENT OR CIRCUIT DATA					SD EQUIVALENT		
DESCRIPTION	REF NOTE	RAT-ING	LIST OR GROUP	QTY	EQUIPMENT OR CIRCUIT	L/G OR FIG	WRG	APP	SCHEMATIC	FIG	OPT
EQUIPMENT REQUIRED IN ADDITION TO LIST 1 OR 1A TO PROVIDE FILT-ERING WHEN CABINET IS EQUIPPED WITH THE 13A RECORDED ANNOUNCE-MENT UNIT. (SEE NOTE 60). DA EFF:06/05/92 FE/RA:NONE		DA	6	1 OMIT131 1	SD5D130-01 SD5D130-01 J5D005CA-1	(1) (1) 1		Y Z			
EQUIPMENT REQUIRED IN ADDITION TO LIST 1 OR 1A FOR EACH 13A OR 13A+ RECORDED ANNOUNCEMENT UNIT PROVIDES FUSES,FUSE LABELS AND FASTENERS ONLY. (MAX FOUR LIST 7'S PER CABINET) DA EFF:07/18/94 FE:J5D005C-1,L7A	57 60 80 97 98	DA	7	1	SD5D130-01	8					
EQUIPMENT REQUIRED IN ADDITION TO LIST 1B OR 60-60C FOR EACH 13A OR 13A+ RECORDED ANNOUNCEMENT UNIT PROVIDES FUSES,FUSE LABLES AND FASTENERS ONLY. THIS PROVIDES FOR THE MODULAR FUSE FILTER UNIT. (MAX FOUR LIST 7A'S PER CABINET). REPL:J5D005C-1,L7 DA EFF:04/01/97 FE/RA:NONE	57 60 97 98	DA	7A	1	SD5D130-01	8					
ASSEMBLY, WIRING AND EQUIPMENT REQUIRED IN ADDITION TO LIST 1 OR 1A TO PROVIDE AN OFFICE ALARM UNIT FOR OFFICES WITH MULTI-MODULE ENVIRONMENT. (SEE NOTE 56 & 65). FEJ5D005C-1,L5&8A DA EFF:09/04/91		DA	8	1	J5D005AD-1	1,2					
ASSEMBLY, WIRING AND EQUIPMENT REQUIRED IN ADDITION TO LISTS 1A,1B OR 60-60C AND 5-5C TO PROVIDE AN OFFICE ALARM UNIT FOR OFFICES REQUIRING MORE THAN 48 SCAN POINTS. DA EFF:04/23/99 FE:J5D005C-1,L8B	56	DA	8A	1	J5D005AD-1	2					
TN867 CIRCUIT PACK REQUIRED IN ADDITION TO 1B OR 60C AND 5D TO PROVIDE THE OFFICE ALARM UNIT WITH 48 ADDITIONAL SCAN POINTS. REPL:J5D005C-1,L8A	500		8B	2 2	J5D005AD-1 ED5D091-10	30 14					
ASSEMBLY,WIRING AND EQUIPMENT REQUIRED IN ADDITION TO LIST 1 OR 1A TO PROVIDE A REMOTE ALARM UNIT FOR AN RSM OFFICE. (SEE NOTES 64 & 65). DA EFF:08/16/91 FE:J5D005C-1,L9A		DA	9	1 1 1	J5D005AD-1 SD5D130-01 SD5D130-01	1,3 5 8	 T				
ASSEMBLY, WIRING AND EQUIPMENT REQUIRED IN ADDITION TO LIST 1 OR 1A TO PROVIDE A REMOTE ALARM UNIT FOR A SINGLE MODULE RSM SITE. (5E2.2 OR EARLIER). DA:05/17/93 FE:J5D005C-1,L9C	64 65 80 97	DA	9A	1 1	J5D005AD-1 J5D003AU-2	1,3 H					
ASSEMBLY, WIRING AND EQUIPMENT REQUIRED IN ADDITION TO LIST 1B OR 60 TO PROVIDE A REMOTE ALARM UNIT FOR A SINGLE MODULE RSM SITE.THIS PROVIDES FOR THE MODULAR FUSE FILTER UNIT. (5E2.2 OR EARLIER). REPL:NONE DA EFF:04/14/94 FE:J5D005C-1,L9D	64 65 80 97	DA	9B	1	J5D005AD-1	1,3					

TABLE-A CONTINUED

TABLE A-FEATURES(CONTINUED)

EQUIPMENT				EQUIPMENT OR CIRCUIT DATA					SD EQUIVALENT		
DESCRIPTION	REF NOTE	RAT-ING	LIST OR GROUP	QTY	EQUIPMENT OR CIRCUIT	L/G OR FIG	WRG	APP	SCHEMATIC	FIG	OPT
ASSEMBLY, WIRING AND EQUIPMENT REQUIRED IN ADDITION TO LIST 1 OR 1A TO PROVIDE A REMOTE ALARM UNIT FOR A SINGLE MODULE RSM SITE. (5E2.2 OR EARLIER). REPL:J5D005C-1,L9A DA EFF:07/18/94 FE/RA:NONE	64 65 80 97	DA	9C	1 1	J5D005AD-1 J5D003AU-2	1A, 3A L					
ASSEMBLY, WIRING AND EQUIPMENT REQUIRED IN ADDITION TO LIST 1B OR 60A OR 60C PROVIDES A REMOTE ALARM UNIT FOR A SINGLE MODULE RSM SITE, PROVIDES FOR A MODULAR FUSE/FILTER UNIT. (5E2.2 OR EARLIER). REPL:J5D005C-1,L9B DA EFF:08/01/96 FE:J5D005C-1,L9E	64 65 80 97	DA	9D	1	J5D005AD-1	3A					
ASSEMBLY, WIRING AND EQUIPMENT REQUIRED IN ADDITION TO LIST 1B OR 60A OR 60C PROVIDES A REMOTE ALARM UNIT FOR A SINGLE MODULE RSM SITE, PROVIDES FOR A MODULAR FUSE/FILTER UNIT. (5EE5(2) AND LATER). REPL:J5D005C-1,L9D DA EFF:04/23/99 FE/RA:NONE	64 65 80 97	DA	9E	1	J5D005AD-1	3B					
FRAMEWORK,ASSEMBLY WIRING AND EQUIPMENT TO PROVIDE A +48 VOLT CABINET FOR USE IN AN EXPORT ENVIRONMENT. (PROVIDES FUSING FOR 1 TO 5 ANALOG TRUNKS). (SEE 10A).		DA	10	1 1 1	J5D003AJ-1 J86905A-1 SD5D130-01	1,2 3,6 13, 15					
FRAMEWORK, ASSEMBLY, WIRING AND EQUIPMENT. TO PROVIDE A +48 VOLT CABINET FOR USE IN AN EXPORT ENVIRONMENT. (PROVIDES FUSING FOR 1 TO 5 ANALOG TRUNKS). DA EFF:05/09/94 FE/RA:NONE	152	DA	10A	1 1 1 2 1	J5D003AJ-1 J86905A-1 SD5D130-01 ED5D695-10 ED5D184-74	1,2 3,6 13, 15 ( ) 7					
ASSEMBLY,WIRING AND EQUIPMENT REQUIRED IN ADDITION TO LIST 10 OR 10A OR 60-60B TO PROVIDE ADDITIONAL FUSING FOR 6 TO 23 ANALOG TRUNKS. DA EFF:05/09/94 FE/RA:NONE	80	DA	11	1 1	J86905A-1 SD5D130-01	4 14					
ASSEMBLY,WIRING AND EQUIPMENT REQUIRED IN ADDITION TO LIST 11 TO PROVIDE ADDITIONAL FUSING FOR 24 TO 46 ANALOG TRUNKS. DA EFF:05/09/94 FE/RA:NONE	80	DA	12	1 1	J5D003AJ-1 SD5D130-01	1 13, 16					
ASSEMBLY,WIRING AND EQUIPMENT REQUIRED IN ADDITION TO LIST 12 TO PROVIDE ADDITIONAL FUSING FOR 47 TO 72 ANALOG TRUNKS. DA EFF:05/09/94 FE/RA:NONE	80	DA	13	1 1 1	J5D003AJ-1 J86905A-1 SD5D130-01	1 4 13, 14					

TABLE-A CONTINUED

COPYRIGHT @ 2001 LUCENT TECHNOLOGIES
ALL RIGHTS RESERVED

BT13

5ESS SWITCHING EQUIPMENT
SPECIFICATION FOR
MISCELLANEOUS CABINET

DWG SIZE C2 | ISSUE 117

LUCENT TECHNOLOGIES INC | J5D005C-1 | SHEET A9 OF 86

PRINTED IN U.S.A.

TABLE A-FEATURES(CONTINUED)

EQUIPMENT				EQUIPMENT OR CIRCUIT DATA					SD EQUIVALENT		
DESCRIPTION	REF NOTE	RAT-ING	LIST OR GROUP	QTY	EQUIPMENT OR CIRCUIT	L/G OR FIG	WRG	APP	SCHEMATIC	FIG	OPT
ASSEMBLY,WIRING AND EQUIPMENT REQUIRED IN ADDITION TO LIST 13 TO PROVIDE ADDITIONAL FUSING FOR 73 TO 78 ANALOG TRUNKS. DA EFF:05/09/94 FE/RA:NONE	80	DA	14	1 1	J5D003AJ-1 SD5D130-01	1 13					
ASSEMBLY,WIRING AND EQUIPMENT REQUIRED IN ADDITION TO LIST 14 TO PROVIDE ADDITIONAL FUSING FOR 79 TO 115 ANALOG TRUNKS. DA EFF:05/09/94 FE/RA:NONE	80	DA	15	1 1	J5D003AJ-1 SD5D130-01	1 13, 16					
ASSEMBLY,WIRING AND EQUIPMENT REQUIRED IN ADDITION TO LISTS 1, 1A, 5 OR 8 TO PROVIDE ONE REMOTE ALARM RELAY UNIT. DA EFF:07/18/94 FE:J5D005C-1,L16A	59 67 80 97	DA	16	1 1	J5D005CB-1 SD5D130-01	1 15	S,M				
ASSEMBLY,WIRING AND EQUIPMENT REQUIRED IN ADDITION TO LISTS 1B ,5A-5C,8A OR 60-60C TO PROVIDE ONE REMOTE ALARM RELAY UNIT. THIS PROVIDES FOR THE MODULAR FUSE FILTER. DA EFF:08/01/96 FE:J5D005C-1,L16B	59 67 80 97	DA	16A	1 1	J5D005CB-1 SD5D130-01	1A 15	S,M				
ASSEMBLY, WIRING AND EQUIPMENT REQUIRED IN ADDITION TO LIST 1B, 5D,8B, OR 60C TO PROVIDE ONE REMOTE ALARM RELAY UNIT. THIS PROVIDES FOR THE MODULAR FUSE FILTER. REPL:J5D005C-1,L16A	59 67 80 97 500		16B	1 1	J5D005CB-1 SD5S130-01	1B 15					
EQUIPMENT REQUIRED IN ADDITION TO LIST 1 OR 1A TO PROVIDE FOR ONE RESISTOR PANEL. (MAXIMUM OF FOUR LIST 17'S). DA EFF:07/18/94 FE:J5D005C-1,L17A	60 66 68 80 97	DA	17	1 1	SD5D130-01 J5D005AA-1	3,4 2					
EQUIPMENT REQUIRED IN ADDITION TO LIST 1B OR 60-60C TO PROVIDE ONE RESISTOR PANEL.THIS PROVIDES FOR MODULAR FUSE FILTER UNIT. (MAXIMUM OF FOUR LIST 17'S). REPL:J5D005C-1,L17	60 66 68 80 97 500		17A	1 1 1 4 1	SD5D130-01 J5D005AA-1 J5D005AA-1 ED5D088-10 J5D005AA-1	3,4 2A 500A 522 F6					
EQUIPMENT REQUIRED IN ADDITION TO LISTS 1 AND P FOR PBX APPLICATIONS WITHOUT PALLETIZATION.		DA	18								
EQUIPMENT REQUIRED IN ADDITION TO LISTS 1 AND Q FOR PBX APPLICATIONS USING PALLETIZED EQUIPMENT.		DA	19								
ASSEMBLY,WIRING AND EQUIPMENT REQUIRED IN ADDITION TO LIST 1 TO PROVIDE POWER DISTRIBUTION FUNCTION, FOR RSM OFFICES ONLY. (SEE NOTE 64 & 71).REPLACED BY LIST 20A.		DA	20	1	SD5D130-01	18					
ASSEMBLY, WIRING AND EQUIPMENT REQUIRED IN ADDITION TO LIST 1 OR 1A TO PROVIDE POWER DISTRI-BUTION FUNCTION, FOR RSM OFFICES ONLY. REPL:J5D005C-1,L20 DA EFF:07/18/94 FE:J5D005C-1,L20B	71 80 97	DA	20A	1	SD5D130-01	18					
ASSEMBLY, WIRING AND EQUIPMENT REQUIRED IN ADDITION TO LIST 1B OR 60-60C TO PROVIDE POWER DISTRIBUTION FUNCTION, FOR RSM OFFICES ONLY. THIS PROVIDES FOR THE MODULAR FUSE FILTER. REPL:J5D005C-1,L20A DA EFF:08/01/96 FE:J5D005C-1,L20C	71 80 97	DA	20B	1 1	SD5D130-01 ED83024-30	18 2,5, B					

TABLE-A CONTINUED

TABLE A-FEATURES(CONTINUED)

EQUIPMENT				EQUIPMENT OR CIRCUIT DATA					SD EQUIVALENT		
DESCRIPTION	REF NOTE	RAT-ING	LIST OR GROUP	QTY	EQUIPMENT OR CIRCUIT	L/G OR FIG	WRG	APP	SCHEMATIC	FIG	OPT
ASSEMBLY, WIRING AND EQUIPMENT REQUIRED IN ADDITION TO LIST 1B OR 60-60C TO PROVIDE POWER DISTRIBUTION FUNCTION, FOR RSM OFFICES ONLY, MAX. 1 PROVIDED. THIS PROVIDES FOR THE MODULAR FUSE FILTER. REPL:J5D005C-1,L20B	71 80 97 500		20C	1 1	SD5D130-01 ED83133-30	18 1,4					
ASSEMBLY,WIRING AND EQUIPMENT REQUIRED IN ADDITION TO LIST 1 TO PROVIDE A PROTECTED AC SUPPLY FOR THE TAPE/DISK CABINET. (SEE NOTE 53, 70 & 75).		DA	21	1	SD5D130-01	2	N				
ASSEMBLY,WIRING AND EQUIPMENT REQUIRED IN ADDITION TO LIST 1 OR 1A TO PROVIDE BELT LINE CIRCUIT. DA EFF:07/18/94 FE:J5D005C-1,L22A	80 97	DA	22	1 1	SD5D130-01 J5D005AB-1	4 1					
ASSEMBLY,WIRING AND EQUIPMENT REQUIRED IN ADDITION TO LIST 1B OR 60-60C TO PROVIDE BELT LINE CIRCUIT.THIS PROVIDES FOR THE MODULAR FUSE FILTER UNIT. REPL:J5D005C-1,L22	80 97 500		22A	1 1 1	SD5D130-01 J5D005AB-1 J5D005AB-1	6 500 F3					
ASSEMBLY,WIRING AND EQUIPMENT REQUIRED IN ADDITION TO LIST 1 OR 1A TO PROVIDE EXTERNAL SANITY MONITOR AND DISTRIBUTE POINT APPLIQUE UNITS. DA EFF:07/18/94 FE:J5D005C-1,L23A	80 97	DA	23	1 1 1 1	SD5D130-01 J3H001EF-1 J1A042BP-1 J5D005AB-1	5 1 1,A, B 2					
ASSEMBLY,WIRING AND EQUIPMENT REQUIRED IN ADDITION TO LIST 1B OR 60-60C TO PROVIDE EXTERNAL SANITY MONITOR AND DISTRIBUTE POINT APPLIQUE UNITS. THIS PROVIDES FOR THE MODULAR FUSE FILTER UNIT. REPL:J5D005C-1,L23 DA EFF:12/01/94 FE/RA:NONE	80 97	DA	23A	1 1 1 1	SD5D130-01 J3H001EF-1 J1A042BP-1 J5D005AB-1	5 1 1,A, B 2					
ASSEMBLY,WIRING AND EQUIPMENT REQUIRED IN ADDITION TO LIST 1 OR 1A TO PROVIDE ONE TRANS-MISSION RATE CONVERTER UNIT FOR OPTICAL INTERFACE BETWEEN A HOST OFFICE AND TRANSMISSION FACILITIES TO THE FIRST ORM. (SEE NOTE 74). SEE LIST 24A.		DA	24	1 1	J5D003ED-1 SD5D130-01	1,A 19	L	L			
ASSEMBLY,WIRING AND EQUIPTMENT REQUIRED IN ADDITION TO LIST 1 TO PROVIDE ONE TRANSMISSION RATE CONVERTER UNIT FOR OPTICAL INTERFACE BETWEEN A HOST OFFICE AND TRANSMISSION FACILITIES TO THE FIRST ORM. (SEE NOTE 74). DA EFF:07/01/91 FE:J5D005C-1,L24B		DA	24A	1 1	J5D003ED-1 SD5D130-01	1,C 19	L	L			

TABLE-A CONTINUED

COPYRIGHT @ 2001 LUCENT TECHNOLOGIES
ALL RIGHTS RESERVED

BT13

5ESS SWITCHING EQUIPMENT
SPECIFICATION FOR
MISCELLANEOUS CABINET

DWG SIZE C2 | ISSUE 117

LUCENT TECHNOLOGIES INC | J5D005C-1 | SHEET A10 OF 86

PRINTED IN U.S.A.

TABLE A-FEATURES(CONTINUED)

EQUIPMENT				EQUIPMENT OR CIRCUIT DATA					SD EQUIVALENT		
DESCRIPTION	REF NOTE	RAT-ING	LIST OR GROUP	QTY	EQUIPMENT OR CIRCUIT	L/G OR FIG	WRG	APP	SCHEMATIC	FIG	OPT
ASSEMBLY, WIRING AND EQUIPMENT REQUIRED IN ADDITION TO LIST 1,1A TO PROVIDE ONE TRANSMISSION RATE CONVERTER UNIT FOR OPTICAL INTERFACE BETWEEN A HOST OFFICE AND TRANSMISSION FACILITIES TO THE FIRST ORM. DA EFF:12/08/93 FE:J5D005C-1,L25D	74 80 97	DA	24B	1 1 1	J5D003ED-1 J5D003ED-1 SD5D130-01	1,D E 19	L	L			
ASSEMBLY, WIRING AND EQUIPMENT REQUIRED IN ADDITION TO LIST 1B OR 60 TO PROVIDE ONE TRANSMISSION RATE CONVERTER UNIT FOR OPTICAL INTERFACE BETWEEN A HOST OFFICE AND TRANSMISSION FACILITIES TO THE FIRST ORM. THIS PROVIDES FOR THE MODULAR FUSE FILTER UNIT. REPL:NONE DA EFF:12/08/93 FE:J5D005C-1,L25E	71 74 80 97	DA	24C	1 1 1	J5D003ED-1 J5D003ED-1 SD5D130-01	1,D G 19	L	L			
WIRING AND EQUIPMENT REQUIRED IN ADDITION TO LIST 24 TO PROVIDE FOR A SECOND ORM. SEE LIST 25A.		DA	25	1 1	J5D003ED-1 SD5D130-01	2 19	K	K			
WIRING AND EQUIPMENT REQUIRED IN ADDITION TO LIST 24 TO PROVIDE FOR A SECOND ORM. DA EFF:07/01/91 FE:J5D005C-1,L25B		DA	25A	1 1	J5D003ED-1 SD5D130-01	2A 19	K	K			
WIRING AND EQUIPMENT REQUIRED IN ADDITION TO LIST 24B TO PROVIDE FOR A SECOND ORM. DA EFF:12/08/93 FE:J5D005C-1,L25F	80 97	DA	25B	1 1	J5D003ED-1 SD5D130-01	2B,F 19	K	K			
WIRING AND EQUIPMENT REQUIRED IN ADDITION TO LIST 24C TO PROVIDE FOR A SECOND ORM. THIS PROVIDES FOR THE MODULAR FUSE FILTER UNIT REPL:NONE DA EFF:12/08/93 FE:J5D005C-1,L25G	80 97	DA	25C	1 1	J5D003ED-1 SD5D130-01	2B,H 19	K	K			
ASSEMBLY, WIRING AND EQUIPMENT REQUIRED IN ADDITION TO LIST 1B,TO PROVIDE ONE TRANSMISSION RATE CONVERTER UNIT FOR OPTICAL INTERFACE BETWEEN A HOST OFFICE AND TRANSMISSION FACILITIES TO THE FIRST ORM. REPL:J5D005C-1,L24B DA EFF:04/01/97 FE:J5D005C-1,L25J	74 80 97	DA	25D	1 1	J5D003ED-2 SD5D130-01	3 19	L	L			
ASSEMBLY, WIRING AND EQUIPMENT REQUIRED IN ADDITION TO LISTS 1B, OR 60 - 60C TO PROVIDE ONE TRANSMISSION RATE CONVERTER UNIT FOR OPTICAL INTERFACE BETWEEN A HOST OFFICE AND TRANSMISSION FACILITIES TO THE FIRST ORM. THIS PROVIDES FOR THE MODULAR FUSE FILTER UNIT. REPL:J5D005C-1,L24C DA EFF:04/01/97 FE:J5D005C-1,L25K	71 74 80 97	DA	25E	1 1	J5D003ED-2 SD5D130-01	3 19	L	L			
WIRING AND EQUIPMENT REQUIRED IN ADDITION TO LIST 24B,25B & 25D TO PROVIDE A SECOND ORM. REPL:J5D005C-1,L25B FE:J5D005C-1,L25H DA EFF:06/09/95	80 97	DA	25F	1 1	J5D003ED-2 SD5D130-01	4B 19	K	K			
WIRING AND EQUIPMENT IN ADDITION TO LIST 24C,25C & 25E TO PROVIDE FOR A SECOND ORM. THIS PROVIDES FOR THE MODULAR FUSE FILTER UNIT REPL:J5D005C-2,L25C FE:J5D005C-1,L25I DA EFF:06/09/95	80 97	DA	25G	1 1	J5D003ED-2 SD5D130-01	4B 19	K	K			

TABLE-A CONTINUED

TABLE A-FEATURES(CONTINUED)

EQUIPMENT				EQUIPMENT OR CIRCUIT DATA					SD EQUIVALENT		
DESCRIPTION	REF NOTE	RAT-ING	LIST OR GROUP	QTY	EQUIPMENT OR CIRCUIT	L/G OR FIG	WRG	APP	SCHEMATIC	FIG	OPT
WIRING AND EQUIPMENT REQUIRED IN ADDITION TO LIST 24B,25B & 25D TO PROVIDE A SECOND ORM. REPL:J5D005C-1,L25F DA EFF:04/01/97 FE:J5D005C-1,L25L	80 97	DA	25H	1 1	J5D003ED-2 SD5D130-01	4C 19	K	K			
WIRING AND EQUIPMENT IN ADDITION TO LIST 24C,25C & 25E TO PROVIDE FOR A SECOND ORM. THIS PROVIDES FOR THE MODULAR FUSE FILTER UNIT REPL:J5D005C-2,L25G DA EFF:04/01/97 FE:J5D005C-1,L25M	80 97	DA	25I	1 1	J5D003ED-2 SD5D130-01	4C 19	K	K			
ASSEMBLY, WIRING AND EQUIPMENT REQUIRED IN ADDITION TO LIST 1B,TO PROVIDE ONE TRANSMISSION RATE CONVERTER UNIT FOR OPTICAL INTERFACE BETWEEN A HOST OFFICE AND TRANSMISSION FACILITIES TO THE FIRST ORM. REPL:J5D005C-1,L25D	74 80 97 500		25J	1 1	J5D003ED-2 SD5D130-01	3A 19	L	L			
ASSEMBLY, WIRING AND EQUIPMENT REQUIRED IN ADDITION TO LISTS 1B, OR 60 - 60C TO PROVIDE ONE TRANSMISSION RATE CONVERTER UNIT FOR OPTICAL INTERFACE BETWEEN A HOST OFFICE AND TRANSMISSION FACILITIES TO THE FIRST ORM. THIS PROVIDES FOR THE MODULAR FUSE FILTER UNIT. REPL:J5D005C-1,L25E	71 74 80 97 500		25K	1 1	J5D003ED-2 SD5D130-01	3A 19	L	L			
WIRING AND EQUIPMENT REQUIRED IN ADDITION TO LIST 25J TO PROVIDE A SECOND ORM. REPL:J5D005C-1,L25H	80 97 500		25L	1 1	J5D003ED-2 SD5D130-01	4D 19	K	K			
WIRING AND EQUIPMENT IN ADDITION TO LIST 25K TO PROVIDE FOR A SECOND ORM. THIS PROVIDES FOR THE MODULAR FUSE/FILTER UNIT. REPL:J5D005C-1,L25I	80 97 500		25M	1 1	J5D003ED-2 SD5D130-01	4D 19	K	K			
ASSEMBLY,WIRING AND EQUIPMENT REQUIRED IN ADDITION TO LIST 1 OR 1A TO PROVIDE ONE LIGHTGUIDE STRANDED CABLE INTERCONNECTION MODULE FOR OPTICAL INTERFACE BETWEEN HOST OFFICE AND TRM WHEN NONMATALLIC SHEATH CABLE IS USED. (SEE NOTE 73). DA EFF:09/04/91 FE:J5D005C-1,L26A		DA	26	1 1	ED8C010-50 SD5D130-01	2,5, 10, 11 (20)		A			
ASSEMBLY, WIRING AND EQUIPMENT REQUIRED IN ADDITION TO LIST 1A OR 1B OR 60-60C TO PROVIDE ONE LIGHTGUILD SHELF COMBINATION FOR OPTICAL INTERFACE BETWEEN HOST OFFICE AND TRM WHEN NONMATALIC SHEATH CABLE IS USED. DA EFF:04/23/99 FE/RA:NONE	91	DA	26A	1	SD5D130-01	(20)		ZA			

TABLE-A CONTINUED

COPYRIGHT @ 2001 LUCENT TECHNOLOGIES
ALL RIGHTS RESERVED

BT13

5ESS SWITCHING EQUIPMENT
SPECIFICATION FOR
MISCELLANEOUS CABINET

DWG SIZE C2 | ISSUE 117

LUCENT TECHNOLOGIES INC | J5D005C-1 | SHEET A11 OF 86

PRINTED IN U.S.A.

TABLE A-FEATURES(CONTINUED)

EQUIPMENT				EQUIPMENT OR CIRCUIT DATA					SD EQUIVALENT		
DESCRIPTION	REF NOTE	RAT-ING	LIST OR GROUP	QTY	EQUIPMENT OR CIRCUIT	L/G OR FIG	WRG	APP	SCHEMATIC	FIG	OPT
EQUIPMENT REQUIRED IN ADDITION TO LIST 1 OR 1A FOR EACH 14A RECORDED ANNOUNCEMENT UNIT PROVIDED. PROVIDES FUSES,FUSE LABELS AND FASTENERS ONLY. AVAILABLE FOR GROWTH TO EXISTING OFFICES ONLY. NOT FOR NEW STARTS PROGRAM ISSUE 5E2(1), 5EE2 OR LATER. <5E2(1) OR LATER> <5EE2 OR LATER> DA EFF:09/08/97 FE:J5D005C-1,L27A	57 61 68 76 80 97	DA	27	1	SD5D130-01	21, 22					
EQUIPMENT REQUIRED IN ADDITION TO LIST 1B OR 60-60C FOR EACH 14A RECORDED ANNOUNCEMENT UNIT PROVIDES.PROVIDES FUSES,FUSE LABELS AND FASTENERS ONLY. THIS PROVIDES FOR THE MODULAR FUSE FILTER UNIT. GENERIC 5E2(1),5EE2 OR LATER. <5E2(1) OR LATER> <5EE2 OR LATER> REPL:J5D005C-1,L27 DA EFF:04/23/99 FE/RA:NONE	57 61 68 76 80 97	DA	27A	1	SD5D130-01	21, 22					
ASSEMBLY, WIRING AND EQUIPMENT REQUIRED IN ADDITION TO LIST 1 OR 1A TO PROVIDE ONE LINK ADAPTER UNIT (LAU) FOR HOST OFFICES ONLY. (GENERIC 5E2(1), 5EE2 OR LATER). <5E2(1) OR LATER> <5EE2 OR LATER> DA EFF:07/18/94 FE:J5D005C-1,L28A	63 80 87 97	DA	28	1 1	SD5D130-01 J5D003FG-1	23 1,B					
ASSEMBLY, WIRING AND EQUIPMENT REQUIRED IN ADDITION TO LIST 1B OR 60-60C TO PROVIDE ONE LINK ADAPTER UNIT (LAU) FOR HOST OFFICES ONLY.THIS PROVIDES FOR THE MODULAR FUSE FILTER UNIT. GENERIC 5E2(1), 5EE2 OR LATER). REPL:J5D005C-1,L28 DA EFF:04/23/99 FE/RA:NONE	63 80 87 97	DA	28A	1 1	SD5D130-01 J5D003FG-1	23 1,B					
EQUIPMENT AND WIRING ALWAYS REQUIRED IN ADDITION TO LIST 20 OR 20A FOR VISUAL ALARMS FOR THE PDP. (GENERIC 5E2(1), 5EE2(2) OR LATER). (SEE LIST 29A). <5E2(1) OR LATER> <5EE2(2) OR LATER>		DA	29	1	SD5D130-01	(18)	G	G			
EQUIPMENT REQUIRED IN ADDITION TO LIST 20A W/O BN, 60 - 60C. FOR VISUAL ALARMS FOR THE PDP (GENERIC 5E2(1), 5EE2(2) OR LATER). PROVIDES BEZELS FOR FUSE AND PDP ALARMS. <5E2(1) OR LATER> <5EE2(2) OR LATER> DA EFF:10/11/95 FE/RA:NONE	80 92 97	DA	29A	1 1 1 1	ED5D503-15 ED5D503-15 ED5D694-30 ED5D694-30	1250 1284 2 3					
EQUIPMENT REQUIRED IN ADDITION TO LIST 20B WITHOUT BN OR 60-60C FOR VISUAL ALARMS FOR THE PDP (GENERIC 5E2(1), 5EE2(2) OR LATER). PROVIDES BEZELS WITHOUT UL LISTING INFORMATION FOR FUSE AND PDP ALARMS. <5E2(1) OR LATER> <5EE2(2) OR LATER> REPL:J5D005C-1,L29A DA EFF:10/11/95 FE/RA:NONE	80 92 97 152	DA	29B	1 1 1	ED5D694-30 ED5D694-30 ED5D693-15	2 3 30B					

TABLE-A CONTINUED

TABLE A-FEATURES(CONTINUED)

EQUIPMENT				EQUIPMENT OR CIRCUIT DATA					SD EQUIVALENT		
DESCRIPTION	REF NOTE	RAT-ING	LIST OR GROUP	QTY	EQUIPMENT OR CIRCUIT	L/G OR FIG	WRG	APP	SCHEMATIC	FIG	OPT
EQUIPMENT REQUIRED IN ADDITION TO LIST 20B WITHOUT 60 - 60C FOR VISUAL ALARMS FOR THE PDP (GENERIC 5E2(1), 5EE2(2) OR LATER). PROVIDES BEZELS WITH UL LISTING INFORMATION FOR FUSE AND PDP ALARMS. <5E2(1) OR LATER> <5EE2(2) OR LATER> REPL:NONE DA EFF:10/11/95 FE/RA:NONE	80 92 97 152	DA	29C	1 1 1	ED5D694-30 ED5D694-30 ED5D693-15	3 4 30B					
FRAMEWORK, ASSEMBLY, EQUIPMENT, AND WIRING FOR ONE MISCELLANEOUS CABINET EQUIPPED WITH TWO FUSE/ FILTER PANELS AND A 3 FAN-FAN UNIT. (API APPLICATION ONLY). (GENERIC 5E2(1), 5EE2 OR LATER). <5E2(1) OR LATER> <5EE2 OR LATER>		DA	30	1 2 1 1	SD5D130-01 J5D003AU-2 J5D003AU-2 J5D003AU-2	24 5,WG C,SF SG					
EQUIPMENT AND ASSEMBLY REQUIRED IN ADDITION TO LIST 30 TO PROVIDE SINGLE BAY CABLE RACK AND END GUARDS FOR A STAND ALONE CONFIGURATION.		DA	31	1 1 1	ED5D508-70 ED5D508-70 ED5D509-70	16, 17 2					
EQUIPMENT, WIRING, AND ASSEMBLY REQUIRED IN ADDITION TO LIST 30 TO PROVIDE ONE GANDOLF MODEM ELIMINATOR RACK.		DA	32	1	SD5D130-01	25					
EQUIPMENT, WIRING, AND ASSEMBLY REQUIRED IN ADDITION TO LIST 30 TO PROVIDE ONE Z/108A2 DATA MOUNTING.		DA	33	1	SD5D130-01	26					
EQUIPMENT, WIRING, AND ASSEMBLY REQUIRED IN ADDITION TO LIST 30 TO PROVIDE ONE AC POWER STRIP.		DA	34	1	SD5D130-01	27					
EQUIPMENT, WIRING, AND ASSEMBLY REQUIRED IN ADDITION TO LIST 30 TO PROVIDE ONE LINK ADAPTER UNIT (LAU) FOR API APPLICATION.		DA	35	1 1 1	J5D003FG-1 J5D003FG-1 SD5D130-01	1,2, 3 (23)					
EQUIPMENT REQUIRED IN ADDITION TO LIST 30 TO PROVIDE SLIDE BRACKETS.		DA	36								
APPARATUS REQUIRED IN ADDITION TO LIST 32 TO PROVIDE ONE ME922 MODEM ELIMINATOR. (MAX 7 LIST 37'S)(SEE NOTE 78).		DA	37								
EQUIPMENT REQUIRED IN ADDITION TO LIST 35 TO PROVIDE ONE MC5D109A1 (TN1087) CIRCUIT PACK FOR (LAU). (MAX 14 LIST 38'S) (SEE NOTE 78).		DA	38	1	J5D003FG-1	5,E					
EQUIPMENT REQUIRED IN ADDITION TO LIST 30 TO PROVIDE ONE 8.5 INCH (223.52MM) FAN PLENUM ASSEMBLY.		DA	39								

TABLE-A CONTINUED

COPYRIGHT @ 2001 LUCENT TECHNOLOGIES
ALL RIGHTS RESERVED

BT13

5ESS SWITCHING EQUIPMENT
SPECIFICATION FOR
MISCELLANEOUS CABINET

DWG SIZE C2 | ISSUE 117

LUCENT TECHNOLOGIES INC | J5D005C-1 | SHEET A12 OF 86

PRINTED IN U.S.A.

TABLE A-FEATURES(CONTINUED)

EQUIPMENT DESCRIPTION	REF NOTE	RAT-ING	LIST OR GROUP	EQUIPMENT OR CIRCUIT DATA QTY	EQUIPMENT OR CIRCUIT	L/G OR FIG	WRG	APP	SD EQUIVALENT SCHEMATIC	FIG	OPT
EQUIPMENT AND WIRING REQUIRED IN ADDITION TO LIST 1 OR 1A FOR EACH TRCU2 (J5D003ED-2) UNIT PROVIDED. (SEE NOTE 60 & 74). GENERIC 5E5 OR LATER. <5E5 OR LATER> SEE LIST 40A.		DA	40	1	SD5D130-01	24					
EQUIPMENT AND WIRING REQUIRED IN ADDITION TO LIST 1 OR 1A FOR EACH TRCU2 (J5D003ED-2) UNIT PROVIDED. GENERIC 5E5 OR LATER, <5E5 OR LATER> DA EFF:07/18/94 FE:J5D005C-1,L40B	60 74 80 97	DA	40A	1	SD5D130-01	24					
EQUIPMENT AND WIRING REQUIRED IN ADDITION TO LIST 1B OR 60-60C FOR EACH TRCU2 (J5D003ED-2) UNIT PROVIDED. THIS PROVIDES FOR THE MODULAR FUSE FILTER UNIT. GENERIC 5E5 OR LATER, <5E5 OR LATER> REPL:NONE	60 74 80 97 500		40B	1	SD5D130-01	24					
ASSEMBLY, WIRING AND EQUIPMENT REQUIRED IN ADDITION TO LIST 1, 1A OR 1B TO PROVIDE ONE DC TO AC INVERTER. (GENERIC 5E1(2)1 OR LATER). <5E1(2)1 OR LATER> DA EFF:04/08/94 FE:J5D005C-1,L41A	80 85 152	DA	41	1	SD5D130-01	26	Q	26			
ASSEMBLY, WIRING AND EQUIPMENT REQUIRED IN ADDITION TO LIST 1, 1A OR 1B TO PROVIDE ONE DC TO AC INVERTER. (GENERIC 5E1(2)1 OR LATER). <5E1(2)1 OR LATER> REPL:J5D005C-1,G41 DA EFF:09/15/96 FE:J5D005C-1,L41B	80 85 152	DA	41A	1 1	SD5D130-01 ED5D621-20	26 24	Q	26			
ASSEMBLY, WIRING AND EQUIPMENT REQUIRED IN ADDITION TO LIST 1, 1A OR 1B TO PROVIDE ONE DC TO AC INVERTER. (GENERIC 5E1(2)1 OR LATER). <5E1(2)1 OR LATER> REPL:J5D005C-1,L41A DA EFF:04/01/97 FE:J5D005C-1,L85	80 85 152	DA	41B	1 1	SD5D130-01 ED5D621-20	26 24	Q	26			
ASSEMBLY, WIRING AND EQUIPMENT REQUIRED IN ADDITION TO LIST 1 TO PROVIDE ONE 3-FAN FAN UNIT. THIS LIST SHOULD BE SPECIFIED WHEN ONE OR MORE OF THE FOLLOW-ING UNITS ARE MOUNTED IN THE MISCELLANEOUS CABINET - TRCU (J5D003ED-1),TRCU2 (J5D003ED-2), LAU (J5D003FG-1) OR WHEN FOUR 13A RECORDED ANNOUNCEMENT UNITS ARE MOUNTED IN ONE MISCELLANEOUS CABINET. (SEE NOTE 82). GENERIC 5E2(1), 5EE2 OR LATER. (SEE LIST 42A). <5E2(1) OR LATER> <5EE2 OR LATER>		DA	42	1 1	J5D003BE-2 SD5D130-01	3 25					
ASSEMBLY, WIRING AND EQUIPMENT REQUIRED IN ADDITION TO LIST 1A TO PROVIDE ONE 3-FAN FAN UNIT. THIS LIST SHOULD BE SPECIFIED WHEN ONE OR MORE OF THE FOLLOWING UNITS ARE MOUNTED IN THE MISCELLANEOUS CABINET-TRCU (J5D003ED-1),TRCU2 (J5D003ED-2), LAU J5D003FG-1. PROVIDES NEW BEZELS FOR FUSE AND FAN ALARM. (SEE NOTE 82), GENERIC 5E2(1),5EE2 OR LATER. <5E2(1) OR LATER> 5EE2 OR LATER> DA EFF:01/15/93 FE:J5D005C-1,L42B	92 97	DA	42A	1 1 1	J5D003BE-2 ED5D505-15 ED5D503-15	4 1,2 1250					

TABLE-A CONTINUED

TABLE A-FEATURES(CONTINUED)

EQUIPMENT DESCRIPTION	REF NOTE	RAT-ING	LIST OR GROUP	EQUIPMENT OR CIRCUIT DATA QTY	EQUIPMENT OR CIRCUIT	L/G OR FIG	WRG	APP	SD EQUIVALENT SCHEMATIC	FIG	OPT
ASSEMBLY, WIRING AND EQUIPMENT REQUIRED IN ADDITION TO LIST 1A TO PROVIDE ONE 3-FAN FAN UNIT. PROVIDES FOR THE THERMISTOR FAN. THIS LIST SHOULD BE SPECIFIED WHEN ONE OR MORE OF THE FOLLOWING UNITS ARE MOUNTED IN THE MISCELLANEOUS CABINET-TRCU (J5D003ED-1),TRCU2 (J5D003ED-2), LAU J5D003FG-1. PROVIDES BEZELS FOR FUSE AND FAN ALARM. <5E2(1) OR LATER> 5EE2 OR LATER> REPL:J5D005C-1,L42A DA EFF:07/18/94 FE:J5D005C-1,L42C	80 82 92 97	DA	42B	1 1 1 1 1	J5D003BE-2 ED5D505-15 ED5D503-15 ED5D503-15 ED5D694-30	4A,C 1,2 1250 1272 1,2					
ASSEMBLY, WIRING AND EQUIPMENT REQUIRED IN ADDITION TO LIST 1B TO PROVIDE ONE 3-FAN FAN UNIT. PROVIDES FOR THE THERMISTOR FAN. THIS LIST SHOULD BE SPECIFIED WHEN ONE OR MORE OF THE FOLLOWING UNITS ARE MOUNTED IN THE MISCELLANEOUS CABINET-TRCU (J5D003ED-1),TRCU2 (J5D003ED-2), LAU J5D003FG-1. PROVIDES BEZELS WITHOUT UL LISTING INFORMATION FOR FUSE AND FAN ALARM.THIS PROVIDES FOR THE MODULAR FUSE FILTER UNIT <5E2(1) OR LATER> 5EE2 OR LATER> REPL:J5D005C-1,L42B DA EFF:04/01/97 FE:J5D005C-1,L42E	80 82 92 97 152	DA	42C	1 1 1 1 1 1	J5D003BE-2 J5D003BE-2 ED5D693-15 ED5D693-15 ED5D693-15 ED5D694-30	4A C 3 4 30 1,2					
ASSEMBLY, WIRING AND EQUIPMENT REQUIRED IN ADDITION TO LIST 1B TO PROVIDE ONE 3-FAN FAN UNIT. PROVIDES FOR THE THERMISTOR FAN. THIS LIST SHOULD BE SPECIFIED WHEN ONE OR MORE OF THE FOLLOWING UNITS ARE MOUNTED IN THE MISCELLANEOUS CABINET-TRCU (J5D003ED-1),TRCU2 (J5D003ED-2), LAU J5D003FG-1. PROVIDES BEZELS WITH UL LISTING INFORMATION FOR FUSE AND FAN ALARM.THIS PROVIDES FOR THE MODULAR FUSE FILTER UNIT <5E2(1) OR LATER> 5EE2 OR LATER> REPL:J5D005C-1,L42B DA EFF:04/01/97 FE:J5D005C-1,L42F	80 92 97 152	DA	42D	1 1 1 1 1 1	J5D003BE-2 J5D003BE-2 ED5D693-15 ED5D693-15 ED5D693-15 ED5D694-30	4A C 3 4 30 1,4					

TABLE-A CONTINUED

COPYRIGHT @ 2001 LUCENT TECHNOLOGIES
ALL RIGHTS RESERVED

BT13

5ESS SWITCHING EQUIPMENT
SPECIFICATION FOR
MISCELLANEOUS CABINET

DWG SIZE C2 | ISSUE 117

LUCENT TECHNOLOGIES INC | J5D005C-1 | SHEET A13 OF 86

PRINTED IN U.S.A.

TABLE A-FEATURES(CONTINUED)

EQUIPMENT				EQUIPMENT OR CIRCUIT DATA					SD EQUIVALENT		
DESCRIPTION	REF NOTE	RAT-ING	LIST OR GROUP	QTY	EQUIPMENT OR CIRCUIT	L/G OR FIG	WRG	APP	SCHEMATIC	FIG	OPT
ASSEMBLY, WIRING AND EQUIPMENT REQUIRED IN ADDITION TO LIST 1B TO PROVIDE ONE 3-FAN FAN UNIT. PROVIDES FOR THE THERMISTOR FAN. THIS LIST SHOULD BE SPECIFIED WHEN ONE OR MORE OF THE FOLLOWING UNITS ARE MOUNTED IN THE MISCELLANEOUS CABINET-TRCU (J5D003ED-1),TRCU2 (J5D003ED-2), LAU J5D003FG-1,TRCU3(J5D003EF-1) . PROVIDES BEZELS WITHOUT UL LISTING INFORMATION FOR FUSE AND FAN ALARM.THIS PROVIDES FOR THE MODULAR FUSE FILTER UNIT <5E2(1) OR LATER> 5EE2 OR LATER> REPL:J5D005C-1,L42C	80 82 92 97 152 175 500		42E	1 1 1 1 1 1 1	J5D003FH-2 J5D003FH-2 J5D003FH-2 J5D003FH-2 ED5D693-15 ED5D694-30 ED5D693-15 ED5D693-15	503 F6 K4 P 32B 1,2 15H 16H					
ASSEMBLY, WIRING AND EQUIPMENT REQUIRED IN ADDITION TO LIST 1B TO PROVIDE ONE 3-FAN FAN UNIT. PROVIDES FOR THE THERMISTOR FAN. THIS LIST SHOULD BE SPECIFIED WHEN ONE OR MORE OF THE FOLLOWING UNITS ARE MOUNTED IN THE MISCELLANEOUS CABINET-TRCU (J5D003ED-1),TRCU2 (J5D003ED-2), LAU J5D003FG-1,TRCU3(J5D003EF-1) . PROVIDES BEZELS WITHOUT UL LISTING INFORMATION FOR FUSE AND FAN ALARM.THIS PROVIDES FOR THE MODULAR FUSE FILTER UNIT <5E2(1) OR LATER> 5EE2 OR LATER> REPL:J5D005C-1,L42D	80 92 97 152 175 500		42F	1 1 1 1 1 1 1 1 1	J5D003FH-2 J5D003FH-2 J5D003FH-2 J5D003FH-2 ED5D693-15 ED5D694-30 ED5D693-15 ED5D693-15	503 F6 K4 P 32B 1,4 15H 16H					
EQUIPMENT REQUIRED IN ADDITION TO LIST 17 OR 17A FOR PBX OFFICES. GENERIC 5E1, 5EE1 OR LATER.	500		43	1	J5D005AA-1	3					
ASSEMBLY, WIRING AND EQUIPMENT REQUIRED IN ADDITION TO LIST 1, 1A OR 1B TO PROVIDE A PROTECTED AC SUPPLY FOR THE TAPE/DISK CABINET. (GENERIC 5E1(2)1 OR LATER). <5E1(2)1 OR LATER> DA EFF:04/08/94 FE:J5D005C-1,G44A	70 80 85 152	DA	44	1	SD5D130-01	26	N	26			
ASSEMBLY, WIRING AND EQUIPMENT REQUIRED IN ADDITION TO LIST 1, 1A OR 1B TO PROVIDE A PROTECTED AC SUPPLY FOR THE TAPE/DISK CABINET. (GENERIC 5E1(2)1 OR LATER). <5E1(2)1 OR LATER> REPL:J5D005C-1,G44 DA EFF:09/15/96 FE:J5D005C-1,L44B	70 80 85 152	DA	44A	1 1	SD5D130-01 ED5D621-20	26 24	N	26			
ASSEMBLY, WIRING AND EQUIPMENT REQUIRED IN ADDITION TO LIST 1, 1A OR 1B TO PROVIDE A PROTECTED AC SUPPLY FOR THE TAPE/DISK CABINET. (GENERIC 5E1(2)1 OR LATER). <5E1(2)1 OR LATER> REPL:J5D005C-1,L44A DA EFF:04/01/97 FE:J5D005C-1,L85	70 80 85 152	DA	44B	1 1	SD5D130-01 ED5D621-20	26 24	N	26			
EQUIPMENT REQUIRED IN ADDITION TO LIST 17 OR 17A FOR RSM OFFICES TO ADD CURRENT LIMITING RESISTORS. (GENERIC 5E1, 5EE1 OR LATER). <5E1 OR LATER> <5EE1 OR LATER>	60 66 68 500		45	1	J5D005AA-1	4					
EQUIPMENT, WIRING AND APPARATUS REQUIRED IN ADDITION TO LIST 1 OR 1A TO PROVIDE ONE MUSIC-ON-QUEUE BASIC UNIT WITH 22 DISTRI-BUTION CIRCUITS. (SEE NOTES 86, 87,88). (GENERIC 5E6 OR LATER). DA EFF:09/04/91 FE:J5D005C-1,L46A		DA	46	1 1	J1A033GR-1 SD5D130-01	1 27					

TABLE-A CONTINUED

TABLE A-FEATURES(CONTINUED)

EQUIPMENT				EQUIPMENT OR CIRCUIT DATA					SD EQUIVALENT		
DESCRIPTION	REF NOTE	RAT-ING	LIST OR GROUP	QTY	EQUIPMENT OR CIRCUIT	L/G OR FIG	WRG	APP	SCHEMATIC	FIG	OPT
EQUIPMENT,WIRING AND APPRATUS REQUIRED IN ADDITION TO LIST 1A TO PROVIDE ONE MUSIC-ON-QUEUE BASIC UNIT WITH 22 DISTRIBUTION CIRCUITS. (GENERIC 5E6 OR LATER). DA EFF:07/18/94 FE:J5D005C-1,L46B	80 87 88 93 97	DA	46A	1 1	J1A033GR-1 SD5D130-01	1 27					
EQUIPMENT,WIRING AND APPRATUS REQUIRED IN ADDITION TO LIST 1B TO PROVIDE ONE MUSIC-ON-QUEUE BASIC UNIT WITH 22 DISTRIBUTION CIRCUITS. THIS PROVIDES FOR THE MODULAR FUSE FILTER UNIT (GENERIC 5E6 OR LATER). REPL:J5D005C-1,L46A DA EFF:06/09/95 FE/RA:NONE	80 87 88 93 97 152	DA	46B	1 1	J1A033GR-1 SD5D130-01	1 27					
EQUIPMENT AND WIRING REQUIRED IN ADDITION TO LIST 46,46A OR 46B TO PROVIDE ONE ADDITIONAL 22 CIRCUIT DISTRIBUTION UNIT. (MAX 2 LIST 47'S PER LIST 46) (SEE NOTE 87). (GENERIC 5E6 OR LATER). DA EFF:06/09/95 FE/RA:NONE	80 87	DA	47	1 1	J1A033GU-1 SD5D130-01	1,WA 28					
EQUIPMENT, WIRING AND APPARATUS REQUIRED IN ADDITION TO LIST 1 TO PROVIDE ONE MUSIC-ON-QUEUE BASIC UNIT WITH 22 DISTRIBUTION CIRCUITS FROM A POWER SOURCE OF 220 VOLTS 50 HERTZ FOR INTERNATIONAL APPLICATIONS. (SEE NOTES 86,87,88) (GENERIC 5EE4.1 OR LATER). DA EFF:03-25-92 FE:J5D005C-1,L48A		DA	48	1 1	J1A033GU-1 SD5D130-01	1 29					
EQUIPMENT, WIRING AND APPARATUS REQUIRED IN ADDITION TO LIST 1, 1A OR 1B TO PROVIDE ONE MUSIC-ON-QUEUE BASIC UNIT WITH 22 DISTRIBUTION CIRCUITS FROM A POWER SOURCE OF 220 VOLTS 50 HERTZ FOR INTERNATIONAL APPLICATIONS. (GENERIC 5EE4.1 OR LATER). DA EFF:06/09/95 FE/RA:NONE	86 87 88 152	DA	48A	1 1	J1A033GR-1 SD5D130-01	1 29					
EQUIPMENT AND WIRING REQUIRED IN ADDITION TO LIST 48,48A OR 69 TO PROVIDE ONE ADDITIONAL 22 CIRCUIT DISTRIBUTION UNIT FROM A POWER SOURCE OF 220 VOLTS 50 HERTZ FOR INTERNATIONAL APPLICATIONS. (MAX 2 LIST 49'S PER LIST 48) (GENERIC 5EE4.1 OR LATER). DA EFF:06/09/95 FE/RA:NONE	87	DA	49	1 1	J1A033GU-1 SD5D130-1	1,WA 30					

TABLE-A CONTINUED

COPYRIGHT @ 2001 LUCENT TECHNOLOGIES
ALL RIGHTS RESERVED

BT13

5ESS SWITCHING EQUIPMENT
SPECIFICATION FOR
MISCELLANEOUS CABINET

DWG SIZE C2 | ISSUE 117

LUCENT TECHNOLOGIES INC | J5D005C-1 | SHEET A14 OF 86

PRINTED IN U.S.A.

TABLE A-FEATURES(CONTINUED)

EQUIPMENT				EQUIPMENT OR CIRCUIT DATA					SD EQUIVALENT		
DESCRIPTION	REF NOTE	RAT-ING	LIST OR GROUP	QTY	EQUIPMENT OR CIRCUIT	L/G OR FIG	WRG	APP	SCHEMATIC	FIG	OPT
EQUIPMENT AND WIRING REQUIRED IN ADDITION TO LIST 8A WHEN MORE THEN SIX POWER DISTRIBUTION FRAMES ARE TO BE EQUIPPED. DA EFF:04/23/99 FE/RA:NONE		DA	50	1	J5D005AD-1	4					
WIRING AND EQUIPMENT REQUIRED IN ADDITION TO LIST 8A FOR EXISTING OFFICES ONLY, EQUIPPED WITH MORE THEN SIX POWER DISTRIBUTION FRAMES. PROVIDES FOR SCAN POINTS 96 AND 97. DO NOT SPECIFY LIST 51 FOR NEW OFFICES NOR WHEN LIST 50 HAS BEEN SPECIFIED. DA EFF:04/23/99 FE/RA:NONE		DA	51	1 1 1	J5D005AD-1 SD5D130-01 ED5D505-16	5 (7) 8	ZJ	ZJ			
EQUIPMENT REQUIRED IN ADDITION TO LIST 7 OR 27 WHEN A REMOTE RECORD UNIT(S) IS REQUIRED WITH A 13A OR 13A+ OR 14A ANNOUNCEMENT UNITS. (MAX 2 LIST 52) DA EFF:07/18/94 FE:J5D005C-1,L52A		DA	52	1	SD5D130-01	32					
EQUIPMENT REQUIRED IN ADDITION TO LIST 7A OR 27A WHEN A REMOTE RECORD UNIT(S) IS REQUIRED WITH A 13A OR 13A+ OR 14A ANNOUNCEMENT UNITS.THIS PROVIDES FOR THE MODULAR FUSE FILTER UNIT (MAX 2 LIST 52A) REPL:J5D005C-1,L52 DA EFF:04/23/99 FE/RA:NONE	97	DA	52A	1	SD5D130-01	32					
EQUIPMENT REQUIRED IN ADDITION TO LIST 52 WHEN A REMOTE RECORD CONCENTRATOR UNIT IS REQUIRED WITH A REMOTE RECORD UNIT.(MAX 1). REPL:NONE DA EFF:07/18/94 FE:J5D005C-1,L53A	97	DA	53	1	SD5D130-01	33					
EQUIPMENT REQUIRED IN ADDITION TO LIST 52A WHEN A REMOTE RECORD CONCENTRATOR UNIT IS REQUIRED WITH A REMOTE RECORD UNIT.THIS PROVIDES FOR THE MODULAR FUSE/FILTER UNIT. (MAX 1 LIST 53A) REPL:J5D005C-1,L53 DA EFF:04/23/99 FE/RA:NONE	97	DA	53A	1	SD5D130-01	33					
EQUIPMENT AND WIRING REQUIRED IN ADDITION TO LIST 1B OR 60-60C TO PROVIDE 1 MODULAR FUSE FILTER UNIT. REPL:NONE	500		54	1 1	J5D003FJ-1 J5D003FJ-1	115 AQ					
EQUIPMENT REQUIRED IN ADDITION LIST 1A WHEN A OPTO ISOLATOR IS REQUIRED FOR A RSM,ORM OR MMRSM OFFICE. REPL:NONE DA EFF:07/18/94 FE/RA:NONE	97	DA	55	2	J5D003AU-2	H					
EQUIPMENT REQUIRED IN ADDITION LIST 54 WHEN A OPTO ISOLATOR CARD IS REQUIRED FOR A RSM,ORM OR MMRSM OFFICE, OR CO-LOCATED WIRELESS APPLICATIONS. REPL:NONE	97		55A	1	J5D003FJ-1	AN					
15A ANALOG ANNOUNCEMENT SYSTEM REQUIRED IN ADDITION TO MISCELLANEOUS CABINET LIST 1B OR 60C TO PROVIDE ONE SHELF THAT CAN BE USED WITH CIRCUIT MODULE LISTS 58,59,73,74,75,86. REPL:NONE	164 186 500		56	1	J1C267A-1	11					

TABLE-A CONTINUED

TABLE A-FEATURES(CONTINUED)

EQUIPMENT				EQUIPMENT OR CIRCUIT DATA					SD EQUIVALENT		
DESCRIPTION	REF NOTE	RAT-ING	LIST OR GROUP	QTY	EQUIPMENT OR CIRCUIT	L/G OR FIG	WRG	APP	SCHEMATIC	FIG	OPT
EQUIPMENT REQUIRED IN ADDITION TO LIST 56 OR 78 TO PROVIDE EIGHT 60 SECOND ANNOUNCEMENTS. (MAX. TWO LIST 57 PER LIST 56 OR THREE PER LIST 78.) DA EFF:04/23/99 FE:J5D005C-1 L86 FE:J5D005C-1 L87		DA	57								
400B CIRCUIT MODULE REQUIRED IN ADDITION TO EACH LIST 59,73,74, 75,86, TO PROVIDE VOICE PROMPT-ING REMOTE RECORD CAPABILITY VIA A POTS LINE FOR EIGHT RECORDED ANNOUNCEMENTS. THIS LIST MOUNTS DIRECTLY TO CIRCUIT MODULES BLD3, BLD4, BLD5, BLD20, OR BLD21. REPL:NONE	157 500		58								
BLD4 CIRCUIT MODULE REQUIRED IN ADDITION TO LIST 56 (15A) OR 78 (16A) ANNOUNCEMENT SYSTEM TO PROVIDE THE SAME 60 SEOND PHASED OR CASCADED ANNOUNCEMENT ON EIGHT CHANNELS (MAX. TWO LISTS 59 PER LIST 56, AND THREE PER LIST 78). REPL:NONE	186 500		59								
FRAMEWORK, ASSEMBLY, WIRING AND EQUIPMENT FOR ONE MISCELLANEOUS CABINET UTILIZING 5ESS-2000 CABINET. REPL:NONE DA EFF:05/09/94 FE:J5D005C-1,L60A	92 152 153 158	DA	60	1	ED5D741-70	1					
FRAMEWORK, ASSEMBLY, WIRING AND EQUIPMENT FOR ONE MICELLANEOUS CABINET EQUIPPED FOR 5ESS-2000 PHASE 1A CABINET NEW LOOK-NON EMC TREATMENT. REPL:J5D005C-1,L60 DA EFF:06/30/95 FE:J5D005C-1,L60C	92 152 153 158 159 162	DA	60A	1	ED5D741-70	1A					
FRAMEWORK, ASSEMBLY, WIRING AND EQUIPMENT FOR ONE MICELLANEOUS CABINET EQUIPPED FOR 5ESS-2000 PHASE 1A CABINET NEW LOOK-EQUIPPED WITH EMC TREATMENT. REPL:J5D005C-1,L60 DA EFF:06/30/95 FE:J5D005C-1,L60C	92 152 153 158 159 162	DA	60B	1	ED5D741-70	1B					
ASSEMBLY AND EQUIPMENT REQUIRED FOR ONE 5ESS-2000 CABINET USED FOR EMC AND NON-EMC TREATMENT APPLICATIONS. REPL:J5D005C-1,L60B	153 159 169 187		60C	1	ED5D785-70	1A					

TABLE-A CONTINUED

COPYRIGHT @ 2001 LUCENT TECHNOLOGIES
ALL RIGHTS RESERVED

BT13

5ESS SWITCHING EQUIPMENT
SPECIFICATION FOR
MISCELLANEOUS CABINET

DWG SIZE C2 | ISSUE 117

LUCENT TECHNOLOGIES INC | J5D005C-1 | SHEET A15 OF 86

PRINTED IN U.S.A.

TABLE A-FEATURES(CONTINUED)

EQUIPMENT				EQUIPMENT OR CIRCUIT DATA					SD EQUIVALENT		
DESCRIPTION	REF NOTE	RAT-ING	LIST OR GROUP	QTY	EQUIPMENT OR CIRCUIT	L/G OR FIG	WRG	APP	SCHEMATIC	FIG	OPT
FRAMEWORK, ASSEMBLY, WIRING AND EQUIPMENT. TO PROVIDE A +48 VOLT CABINET FOR USE IN AN EXPORT ENVIRONMENT UTILIZING 5ESS-2000 CABINET. (PROVIDES FUSING FOR 1 TO 5 ANALOG TRUNKS). REPL:NONE DA EFF:05/09/94 FE/RA:NONE	152 153	DA	61	1 1 1 1	J5D003AJ-1 J86905A-1 SD5D130-01 ED5D741-70	1,2 3,6 13, 15 1					
EQUIPMENT REQUIRED IN ADDITION TO LIST 60 OR 60B. PROVIDES DOORS UTILIZING A 5ESS-2000 PHASE 1A CABINET EQUIPPED WITH EMC TREATMENT. REPL:NONE DA EFF:06/30/95 FE:J5D003C-1,LDA	152 163	DA	62	1	ED5D741-70	2					
EQUIPMENT REQUIRED IN ADDITION TO LIST 60 OR 60A. PROVIDES DOORS UTILIZING A 5ESS-2000 PHASE 1A CABINET, NON-EMC TREATMENT. REPL:NONE DA EFF:06/30/95 FE:J5D005C-1,LDB	152 163	DA	62A	1	ED5D741-70	2A					
EQUIPMENT AND WIRING REQUIRED IN ADDITION TO LIST 60-60B PROVIDES A FRONT FUSE/FAN LED INDICATOR STRIPS AND BLANK REAR INDICATOR STRIP UTILIZING 5ESS-2000 CABINET WITH MODULAR FUSE/FILTER REPL:NONE DA EFF:06/30/95 FE:J5D005C-1,LDC	152 155 160 163	DA	63	1 1	SD5D130-01 ED5D734-14	38 19		ZW			
EQUIPMENT AND WIRING REQUIRED IN ADDITION TO LIST 20B WITH 1B OR 60 - 60B. PROVIDES A FRONT FUSE/PDP CONV LED INDICATOR STRIP AND BLANK REAR INDICATOR STRIP FOR THE PDP EQUIPMENT UTILIZING 5ESS-2000 CABINET. (GENERIC 5E2(1), 5EE2(2) OR LATER). <5E2(1) OR LATER> <5EE2(2) OR LATER> REPL:NONE DA EFF:06/30/95 FE:J5D005C-1,LDE	92 152 155 160 163	DA	64	1 1	SD5D130-01 ED5D734-14	39 17		ZX			
ASSEMBLY, WIRING AND EQUIPMENT REQUIRED IN ADDITION TO LIST 60-60B PROVIDES ONE DC/AC INVERTER, UTILIZING 5ESS-2000 CABINET. (GENERIC 5E1(2)1 OR LATER). <5E1(2)1 OR LATER> REPL:NONE DA EFF:04/08/94 FE:J5D005C-1,G65A	85 152	DA	65	1 1	SD5D130-01 ED5D621-20	26 24	Q	26			
ASSEMBLY, WIRING AND EQUIPMENT REQUIRED IN ADDITION TO LIST 60-60C.PROVIDES ONE DC/AC INVERTER, UTILIZING 5ESS-2000 CABINET. (GENERIC 5E1(2)1 OR LATER). <5E1(2)1 OR LATER> REPL:J5D005C-1,G65 DA EFF:09/15/96 FE:J5D005C-1,L65B	85 152	DA	65A	1 1	SD5D130-01 ED5D621-20	26 24	Q	26			
ASSEMBLY, WIRING AND EQUIPMENT REQUIRED IN ADDITION TO LIST 60-60C.PROVIDES ONE DC/AC INVERTER, UTILIZING 5ESS-2000 CABINET. (GENERIC 5E1(2)1 OR LATER). <5E1(2)1 OR LATER> REPL:J5D005C-1,L65A DA EFF:04/01/97 FE:J5D005C-1,L85	85 152	DA	65B	1 1	SD5D130-01 ED5D621-20	26 24	Q	26			

TABLE-A CONTINUED

TABLE A-FEATURES(CONTINUED)

EQUIPMENT				EQUIPMENT OR CIRCUIT DATA					SD EQUIVALENT		
DESCRIPTION	REF NOTE	RAT-ING	LIST OR GROUP	QTY	EQUIPMENT OR CIRCUIT	L/G OR FIG	WRG	APP	SCHEMATIC	FIG	OPT
ASSEMBLY, WIRING AND EQUIPMENT REQUIRED IN ADDITION TO LIST 60-60B PROVIDE ONE 3-FAN THERMISTOR FAN UNIT UTILIZING 5ESS-2000 CABINET. PROVIDES A FRONT FUSE/FAN LED INDICATOR STRIP AND BLANK REAR INDICATOR STRIP. THIS LIST SHOULD BE SPECIFIED WHEN ONE OR MORE OF THE FOLLOWING UNITS ARE MOUNTED IN THE MISCELLANEOUS CABINET-TRCU (J5D003ED-1),TRCU2 (J5D003ED-2), LAU J5D003FG-1. <5E2(1) OR LATER> 5EE2 OR LATER> REPL:NONE DA EFF:04/01/97 FE:J5D005C-1,L66C	77 92 152 155	DA	66	1 1 1 1	J5D003BE-2 J5D003BE-2 ED5D734-14 ED5D693-15	4A C 15 3,4					
ASSEMBLY, WIRING AND EQUIPMENT REQUIRED IN ADDITION TO LIST 60-60B PROVIDE ONE 3-FAN THERMISTOR FAN UNIT UTILIZING 5ESS-2000 CABINET.PROVIDES A FRONT FUSE/FAN LED INDICATOR STRIP AND BLANK REAR INDICATOR STRIP. THIS LIST SHOULD BE SPECIFIED WHEN ONE OR MORE OF THE FOLLOWING UNITS ARE MOUNTED IN THE MISCELLANEOUS CABINET-TRCU (J5D003ED-1),TRCU2 (J5D003ED-2), LAU J5D003FG-1.$ <5E2(1) OR LATER> 5EE2 OR LATER> REPL:NONE DA EFF:07/18/94 FE/RA:NONE	92 152 155	DA	66A	1 1 1 1	J5D003BE-2 J5D003BE-2 ED5D734-14 ED5D693-15	4A C 15 3,4					
ASSEMBLY, WIRING AND EQUIPMENT REQUIRED IN ADDITION TO LIST 60C PROVIDES ONE 3-FAN THERMISTOR FAN UNIT UTILIZING 5ESS-2000 CABINET. THIS LIST SHOULD BE SPECIFIED WHEN ONE OR MORE OF THE FOLLOWING UNITS ARE MOUNTED IN THE MISCELLANEOUS CABINET-TRCU (J5D003ED-1),TRCU2 (J5D003ED-2), LAU J5D003FG-1. <5E2(1) OR LATER> 5EE2 OR LATER> REPL:NONE DA EFF:04/01/97 FE:J5D005C-1,L66C	77 92 152 155	DA	66B	1 1 1 1	J5D003BE-2 J5D003BE-2 ED5D734-14 ED5D693-15	4A C 15 3,4					
ASSEMBLY, WIRING AND EQUIPMENT REQUIRED IN ADDITION TO LIST 60C PROVIDES ONE 3-FAN THERMISTOR FAN UNIT UTILIZING 5ESS-2000 CABINET. THIS LIST SHOULD BE SPECIFIED WHEN ONE OR MORE OF THE FOLLOWING UNITS ARE MOUNTED IN THE MISCELLANEOUS CABINET-TRCU (J5D003ED-1),TRCU2 (J5D003ED-2), LAU J5D003FG-1,TRCU3(J5D003EF-1) .<5E2(1) OR LATER> 5EE2 OR LATER> REPL:J5C005C-1,L66B	77 92 152 155		66C	1 1 1 1 1 1 1 1	J5D003FH-2 J5D003FH-2 J5D003FH-2 J5D003FH-2 ED5D734-14 ED5D693-15 ED5D693-15	503 F8 K4 N 39 15H 16H					

TABLE-A CONTINUED

COPYRIGHT @ 2001 LUCENT TECHNOLOGIES
ALL RIGHTS RESERVED

BT13

5ESS SWITCHING EQUIPMENT
SPECIFICATION FOR
MISCELLANEOUS CABINET

DWG SIZE C2 | ISSUE 117

LUCENT TECHNOLOGIES INC | J5D005C-1 | SHEET A16 OF 86

PRINTED IN U.S.A.

TABLE A-FEATURES(CONTINUED)

EQUIPMENT DESCRIPTION	REF NOTE	RAT-ING	LIST OR GROUP	EQUIPMENT OR CIRCUIT DATA QTY	EQUIPMENT OR CIRCUIT	L/G OR FIG	WRG	APP	SD EQUIVALENT SCHEMATIC	FIG	OPT
ASSEMBLY, WIRING AND EQUIPMENT REQUIRED IN ADDITION TO LIST 60-60C TO PROVIDE A PROTECTED AC SUPPLY FOR THE TAPE/DISK CABINET UTILIZING 5ESS-2000 CABINET. (GENERIC 5E1(2)1 OR LATER). <5E1(2)1 OR LATER> REPL:NONE DA EFF:04/08/94 FE:J5D005C-1,L67A	70 85 152	DA	67	1	SD5D130-01	26	N	26			
ASSEMBLY, WIRING AND EQUIPMENT REQUIRED IN ADDITION TO LIST 60-60C. TO PROVIDE A PROTECTED AC SUPPLY FOR THE TAPE/DISK CABINET UTILIZING 5ESS-2000 CABINET. (GENERIC 5E1(2)1 OR LATER). <5E1(2)1 OR LATER> REPL:J5D005C-1,L67 DA EFF:09/15/96 FE:J5D005C-1,L67B	70 85 152	DA	67A	1	SD5D130-01	26	N	26			
ASSEMBLY, WIRING AND EQUIPMENT REQUIRED IN ADDITION TO LIST 60-60C. TO PROVIDE A PROTECTED AC SUPPLY FOR THE TAPE/DISK CABINET UTILIZING 5ESS-2000 CABINET. (GENERIC 5E1(2)1 OR LATER). <5E1(2)1 OR LATER> REPL:J5D005C-1,L67A DA EFF:04/01/97 FE:J5D005C-1,L85	70 85 152	DA	67B	1	SD5D130-01	26	N	26			
EQUIPMENT,WIRING AND APPRATUS REQUIRED IN ADDITION TO LIST 60-60C PROVIDES ONE MUSIC-ON-QUEUE BASIC UNIT WITH 22 DISTRIBUTION CIRCUITS, UTILIZING 5ESS-2000 CABINET. (GENERIC 5E6 OR LATER). REPL:NONE DA EFF:06/09/95 FE/RA:NONE	87 88 93 152	DA	68	1 1	J1A033GR-1 SD5D130-01	1 27					
EQUIPMENT, WIRING AND APPARATUS REQUIRED IN ADDITION TO LIST 60-60C PROVIDES ONE MUSIC-ON-QUEUE BASIC UNIT WITH 22 DISTRIBUTION CIRCUITS FROM A POWER SOURCE OF 220 VOLTS 50 HERTZ FOR INTERNATIONAL APPLICATIONS UTILZING 5ESS-2000 CABINET. (GENERIC 5EE4.1 OR LATER). REPL:NONE DA EFF:06/09/95 FE/RA:NONE	87 152	DA	69	1 1	J1A033GR-1 SD5D130-01	1 29					
EQUIPMENT AND WIRING REQUIRED IN ADDITION TO LIST 60-60B PROVIDES A FRONT AND REAR FUSE/FAN LED INDICATOR STRIP UTILIZING 5ESS-2000 CABINET WITH MODULAR FUSE/FILTER UNIT. REPL:NONE DA EFF:06/30/95 FE:J5D005C-1,LDO	152 155 161 163	DA	70	1 1	SD5D130-01 ED5D734-14	38 20		ZW			
EQUIPMENT AND WIRING REQUIRED IN ADDITION TO LIST 20B WITH 1B OR 60 - 60B. PROVIDES A FRONT AND REAR FUSE/PDP CONV INDICATOR STRIP FOR THE PDP EQUIPMENT UTILIZING 5ESS-2000 CABINET. (GENERIC 5E2(1), 5EE2(2)OR LATER). <5E2(1) OR LATER> <5EE2(2) OR LATER> REPL:NONE DA EFF:06/30/95 FE:J5D003C-1,LDL	92 152 155 162 163	DA	71	1 1	SD5D130-01 ED5D734-14	39 18		ZX			
WIRING REQUIRED IN ADDITION TO LIST 20B WITH 60C EQUIPPED IN THE 5ESS-2000 CABINET. DA EFF:06/09/95 FE/RA:NONE		DA	71A	1	ED5D734-14	18					

TABLE-A CONTINUED

TABLE A-FEATURES(CONTINUED)

EQUIPMENT DESCRIPTION	REF NOTE	RAT-ING	LIST OR GROUP	EQUIPMENT OR CIRCUIT DATA QTY	EQUIPMENT OR CIRCUIT	L/G OR FIG	WRG	APP	SD EQUIVALENT SCHEMATIC	FIG	OPT
ASSEMBLY, WIRING AND EQUIPMENT REQUIRED IN ADDITION TO LIST 60-60B PROVIDES 1 3-FAN THERMISTOR FAN UNIT UTILIZING 5ESS-2000 CABINET. PROVIDES A FRONT AND REAR FUSE/FAN INDICATOR STRIP. THIS LIST SHOULD BE SPECIFIED WHEN ONE OR MORE OF THE FOLLOWING UNITS ARE MOUNTED IN THE MISCELLANEOUS CABINET-TRCU (J5D003ED-1),TRCU2 (J5D003ED-2), LAU J5D003FG-1. <5E2(1) OR LATER> 5EE2 OR LATER> REPL:NONE DA EFF:04/01/97 FE:J5D005C-1,L72B	92 152 155	DA	72	1 1 1 1	J5D003BE-2 J5D003BE-2 ED5D734-14 ED5D693-15	4A C 16 3,4					
ASSEMBLY, WIRING AND EQUIPMENT REQUIRED IN ADDITION TO LIST 60C PROVIDES 1 3-FAN THERMISTOR FAN UNIT UTILIZING 5ESS-2000 CABINET. THIS LIST SHOULD BE SPECIFIED WHEN ONE OR MORE OF THE FOLLOWING UNITS ARE MOUNTED IN THE MISCELLANEOUS CABINET-TRCU (J5D003ED-1),TRCU2 (J5D003ED-2), LAU J5D003FG-1. <5E2(1) OR LATER> 5EE2 OR LATER> REPL:NONE DA EFF:04/01/97 FE:J5D005C-1,L72B	92 152 155	DA	72A	1 1 1 1	J5D003BE-2 J5D003BE-2 ED5D734-14 ED5D693-15	4A C 16 3,4					
ASSEMBLY, WIRING AND EQUIPMENT REQUIRED IN ADDITION TO LIST 60C PROVIDES 1 3-FAN THERMISTOR FAN UNIT UTILIZING 5ESS-2000 CABINET. THIS LIST SHOULD BE SPECIFIED WHEN ONE OR MORE OF THE FOLLOWING UNITS ARE MOUNTED IN THE MISCELLANEOUS CABINET-TRCU (J5D003ED-1),TRCU2 (J5D003ED-2), LAU J5D003FG-1,TRCU3(J5D003EF-1) . <5E2(1) OR LATER> 5EE2 OR LATER> REPL:NONE	92 152 155		72B	1 1 1 1 1 1 1 1	J5D003FH-2 J5D003FH-2 J5D003FH-2 J5D003FH-2 ED5D734-14 ED5D693-15 ED5D693-15	503 F8 K4 N 40 15H 16H					
BLD5 CIRCUIT MODULE REQUIRED IN ADDITION TO 15A (LIST 56) OR 16A (LIST 78) ANNOUNCEMENT SYSTEM TO PROVIDE 120 SECOND ANNOUNCEMENT ON EIGHT CHANNELS. (MAX. TWO LISTS 73 PER LIST 56, AND THREE PER LIST 78) REPL:NONE	186 500		73								
BLD20 CIRCUIT MODULE REQUIRED IN ADDITION TO 15A ANALOG ANNOUNCEMENT SYSEM (LIST 56) TO PROVIDE FOUR 60 SECOND ANNOUNCEMENTS. (MAX. TWO LIST 74 PER LIST 56) REPL:NONE	186 500		74								

TABLE-A CONTINUED

COPYRIGHT @ 2001 LUCENT TECHNOLOGIES
ALL RIGHTS RESERVED

BT13

5ESS SWITCHING EQUIPMENT
SPECIFICATION FOR
MISCELLANEOUS CABINET

DWG SIZE C2 | ISSUE 117

LUCENT TECHNOLOGIES INC | J5D005C-1 | SHEET A17 OF 86

PRINTED IN U.S.A.

TABLE A-FEATURES(CONTINUED)

EQUIPMENT				EQUIPMENT OR CIRCUIT DATA					SD EQUIVALENT		
DESCRIPTION	REF NOTE	RAT-ING	LIST OR GROUP	QTY	EQUIPMENT OR CIRCUIT	L/G OR FIG	WRG	APP	SCHEMATIC	FIG	OPT
BLD21 CIRCUIT MODULE REQUIRED IN ADDITION TO 15A ANALOG ANNOUCE-MENT SYSTEM LIST 56 CONNECTED TO LINE SIDE (TIP/RING) TO PROVIDE FOUR 60 SECOND ANNOUNCEMENTS (MAX. TWO LIST 75 PER LIST 56). REPL:NONE	186 500		75								
EQUIPMENT REQUIRED IN ADDITION TO LIST 56. PROVIDES FOUR 120 SECOND ANNOUNCEMENTS. (MAX. TWO LIST 76 PER LIST 56.) DA EFF:04/23/99 FE/RA:NONE		DA	76								
EQUIPMENT REQUIRED IN ADDITION TO LIST 56. PROVIDES FOUR 120 SECOND ANNOUNCEMENTS WITH RING TRIP. (MAX. TWO LIST 77 PER LIST 56.) DA EFF:04/23/99 FE/RA:NONE		DA	77								
16A DIGITAL ANNOUNCEMENT SYSTEM WITH 3 CIRCUIT MODULE CAPABILITY REQUIRED IN ADDITION TO MISC. CABINET LIST 1B OR 60C TO PROVIDE MUSIC-ON-HOLD (T1/E1) AND FOR OTHER NON-STANDARD CONFIGURATIONS WHEN ORDERED WITH COMBINATIONS OF LISTS 58,59,73, AND 86. THIS LIST CONSISTS OF ONE 16A SHELF AND ONE DIGITAL INTERFACE CIRCUIT MODULE (BLD10) . REPL:NONE	157 164 186 500		78	1 1	J1C273A-1 ED5D505-10	1 78					
ASSEMBLY, WIRING AND EQUIPMENT REQUIRED IN ADDITION TO LIST 60C WHEN A PROTECTED AC POWER SUPPLY IS REQUIRED FOR THE VCDX FEATURE PROVIDES ONE 2KVA, -48VDC TO 110VAC INVERTER. REPL:NONE DA EFF:04/01/97 FE:J5D005C-1,L79A		DA	79								
ASSEMBLY, WIRING AND EQUIPMENT REQUIRED IN ADDITION TO LIST 60C WHEN A PROTECTED AC POWER SUPPLY IS REQUIRED FOR THE VCDX FEATURE PROVIDES ONE 2KVA, -48VDC TO 110VAC INVERTER. REPL:J5D005C-1,L79 DA EFF:02/29/00 FE:J5D005C-1 L79B	500	DA	79A						SD5D130-01	2C	
EQUIPMENT REQUIRED IN ADDITION TO LIST 60C 5ESS-2000 CABINET TO PROVIDE ONE 2KVA -48VDC TO 120VAC STATIC INVERTER PROVIDING "AC PROTECTED" POWER TO THE VERY COMPACT DIGITAL EXCHANGE (VCDX) FEATURE. REPL:J5D005C-1 L79A	183 500		79B								
WIRING AND EQUIPMENT REQUIRED IN ADDITION TO LIST 16A OR 16B TO PROVIDE REMOTE ALARMS. (REMOTE SITE) REPL:NONE DA EFF:04/23/99 FE/RA:NONE	166 168	DA	80	1 1	J5D005CB-1 NJ00508F-1	2 2,A			SD5D017-01	3,7	
EQUIPMENT REQUIRED IN ADDITION TO LIST 1B TO PROVIDE PLATE TO MOUNT MISCELLANEOUS EQUIPMENT LIKE MODEMS/INVERTERS ETC.	170 500		81								
WIRING AND EQUIPMENT REQUIRED IN ADDITION TO LIST 80 TO PROVIDE REMOTE ALARMS FOR CENTRAL SITE APPLICATIONS. REPL:NONE DA EFF:04/23/99 FE/RA:NONE	166 167 168	DA	82	1 1	NJ00508E-1 NE00312-31	2,A 2			SD5D017-01	7	

TABLE-A CONTINUED

TABLE A-FEATURES(CONTINUED)

EQUIPMENT				EQUIPMENT OR CIRCUIT DATA					SD EQUIVALENT		
DESCRIPTION	REF NOTE	RAT-ING	LIST OR GROUP	QTY	EQUIPMENT OR CIRCUIT	L/G OR FIG	WRG	APP	SCHEMATIC	FIG	OPT
WIRING AND EQUIPMENT REQUIRED TO PROVIDE ONE 110VAC POWER OUTLET STRIP TO BE CONNECTED TO THE OFFICE AC CIRCUIT PER JOB REQUIREMENTS REPL:NONE DA EFF:09/01/00 FE:J5D005C-1 L83A	500	DA	83								
EQUIPMENT REQUIRED IN ADDITION TO LIST 60C TO PROVIDE ONE 110VAC NINE PLUG POWER OUTLET STRIP TO BE CONNECTED TO THE OFFICE AC CIRCUIT PER INDIVIDUAL JOB REQUIREMENTS. REPL:J5D005C-1 L83	500		83A								
EQUIPMENT REQUIRED IN ADDITION TO LISTS 1B OR 60C TO PROVIDE AC/DC INVERTERS FOR AC FREE APPLICATIONS. REPL:NONE	500		84								
EQUIPMENT REQUIRED IN ADDITION TO LIST 1B OR 60C TO PROVIDE ONE DC TO AC INVERTER. THIS LIST PROVIDES FOR EMERGENCY AC AND PROTECTED AC APPLICATIONS. (GENERIC 5E1(2)1 OR LATER). REPL:J5D005C-1,L41B REPL:J5D005C-1,L44B REPL:J5D005C-1,L65B REPL:J5D005C-1,L67B	70 80 85 500		85						SD5D130-01	2B	
BLD3 CIRCUIT MODULE REQUIRED IN ADDITION 15A (LIST 56) OR 16A (LIST 78) ANNOUNCEMENT SYSTEM TO PROVIDE EIGHT 60 SECOND RECORDED ANNOUNCEMENTS (MAX. TWO LIST 86 PER LIST 56, AND THREE PER LIST 78). REPL:J5D005C-1 L57	186 500		86								
BLD3 CIRCUIT PACK REQUIRED IN ADDITION TO LIST 78 TO PROVIDE EIGHT 60 SECOND ANNOUNCEMENTS. (MAX THREE LISTS 87 PER LIST 78) REPL:J5D005C-1 L57 DA EFF:02/29/00 FE:J5D005C-1 L86	500	DA	87								
TEST BUS CONTROL UNIT (TBCU) REQUIRED IN ADDITION TO LIST 60C TO PROVIDE MECHANIZED LOOP TESTING (MLT)/LOCAL TEST DESK (LTD) TESTING OF INDIVIDUAL VOICE CHANNELS OF AN INTERGRATED SUBSCRIBER LOOP CARRIER 96 (SLC 96) SYSTEM. REPL:NONE	499 500		88	1	J1C189A-1	1			SD97791-01 T97791-30		
SM499 CIRCUIT PACK REQUIRED IN ADDITION TO LIST 88 TO PROVIDE VOLTAGE TO POWER A TEST BUS CONTROL UNIT (TBCU) EQUIPPED WITH SM500 CIRCUIT PACKS. (MAX.1 LIST 89 PER LIST 88) REPL:NONE	500		89	1					SD97791-01		

TABLE-A CONTINUED

COPYRIGHT @ 2001 LUCENT TECHNOLOGIES
ALL RIGHTS RESERVED

BT13

5ESS SWITCHING EQUIPMENT
SPECIFICATION FOR
MISCELLANEOUS CABINET

DWG SIZE C2 | ISSUE 117

LUCENT TECHNOLOGIES INC | J5D005C-1 | SHEET A18 OF 86

PRINTED IN U.S.A.

TABLE A-FEATURES(CONTINUED)

EQUIPMENT				EQUIPMENT OR CIRCUIT DATA					SD EQUIVALENT		
DESCRIPTION	REF NOTE	RAT-ING	LIST OR GROUP	QTY	EQUIPMENT OR CIRCUIT	L/G OR FIG	WRG	APP	SCHEMATIC	FIG	OPT
SM500 CIRCUIT PACK REQUIRED IN ADDITION TO LIST 88 TO PROVIDE TWO CIRCUITS FOR CENTRAL OFFICE DC TESTING OF TWO SUBSCRIBER LOOP CARRIER 96 (SLC 96) REMOTE LOCATIONS. (MAX.15 LIST 90 PER LIST 88) REPL:NONE DA EFF:08/01/00 FE:J5D005C-1 L90A	500	DA	90	1					SD97791-01		
SM500B CIRCUIT PACK REQUIRED IN ADDITION TO LIST 88 TO PROVIDE TWO CIRCUITS FOR CENTRAL OFFICE DC TESTING OF TWO SUBSCRIBER LOOP CARRIER 96 (SLC96) REMOTE LOCATIONS. (MAX. 15 LIST 90A PER LIST 88) REPL:J5D005C-1 L90	500		90A						SD97791-01		
3A SIMPLIFIED MESSAGE SYSTEM INTERFACE (3A SMSI) TRANSLATOR REQUIRED IN ADDITION TO LIST 60C TO PROVIDE AN INTERFACE BETWEEN AN INTERGRATED SERVICE DIGITAL NETWORK (ISDN) APPLICATION PROCESSOR INTERFACE (API) CONNECTED TO A 5ESS SWITCH AND A CUSTOMER PROVIDED VOICE MAIL SYSTEM (VMS). REPL:NONE DA EFF:08/01/00 FE:J5D005C-1 L91A	500	DA	91	1	ED5D709-30	20			SD5D171-01	E	
ONE 3A SIMPLIFIED MESSAGE SYSTEM INTERFACE (3A SMSI) TRANSLATOR REQUIRED IN ADDITION TO LIST 60C TO PROVIDE AN INTERFACE BETWEEN AN INTERGRATED SERVICE DIGITAL NETWORK (ISDN) APPLICATION PROCESSOR INTERFACE (API) CONNECTED TO A 5ESS SWITCH AND A CUSTOMER PROVIDED VOICE MAIL SYSTEM (VMS). PROVIDES TWO UNIT MOUNTING SHELF, CABLES,AND POWER SUPPLIES FOR EITHER 115VAC OR -48VDC APPLICATIONS. REPL:J5D005C-1 L91	191 500		91A	1 1	ED5D709-30 ED5D709-30	20 C			SD5D171-01	E	
FIELD INSTALLED FINAL ASSEMBLY HARDWARE PROVIDING MOUNTING BRACKETS, FASTENERS, FUSES, AND LABELS TO INSTALL A CUSTOMER SUPPLIED "TELECOM SOLUTIONS" DIGITAL CLOCK DISTRIBUTOR 523 (DCD-523) SYSTEM CONSISTING OF ONE MASTER SHELF (990-45230-01) WITH STRATUM III CLOCK STABILITY AND ONE MODULAR MOUNTING PANEL MOUNTED IN A 5ESS-2000 CABINET. REPL:NONE	177 180		92	1	ED5D088-12	277				16	
ASSEMBLED 16A DIGITAL ANNOUNCE-MENT SYSTEM IN ADDITION TO MISCELLANEOUS CABINET LIST 1B OR 60C TO PROVIDE 24 CHANNELS WITH A MAXIMUM RECORDING LENGTH OF 60 SECONDS EACH, REMOTE RECORD CAPABILITY, AND MUSIC ON HOLD. THIS LIST CONNECTS TO THE DIGITAL ANNOUNCEMENT TRUNKS (T1/E1) VIA DS1 AND CONSISTS OF ONE SHELF, ONE INSTALLED DIGITAL INTERFACE BOARD (BLD10), THREE INSTALLED 8 CHANNEL 60 SECOND ANNOUNCMENT BOARDS (BLD3), AND THREE INSTALLED REMOTE RECORD BOARDS (400B). REPL:NONE DA EFF:08/01/00 FE:J5D005C-1 L93A	186 500	DA	93	1 1	J1C273A-1 ED5D505-10	11 78					

TABLE-A CONTINUED

TABLE A-FEATURES(CONTINUED)

EQUIPMENT				EQUIPMENT OR CIRCUIT DATA					SD EQUIVALENT		
DESCRIPTION	REF NOTE	RAT-ING	LIST OR GROUP	QTY	EQUIPMENT OR CIRCUIT	L/G OR FIG	WRG	APP	SCHEMATIC	FIG	OPT
ASSEMBLED 16A DIGITAL ANNOUNCE-MENT SYSTEM IN ADDITION TO LIST 1B OR 60C TO PROVIDE 24 CHANNELS WITH A MAXIMUM RECORDING LENGTH OF 60 SECONDS EACH,REMOTE RECORD CAPABILITY, AND MUSIC ON HOLD. THIS LIST CONNECTS TO THE DIGITAL ANNOUNCEMENT TRUNKS (T1/E1) VIA DS1 AND CONSISTS OF ONE SHELF,ONE INSTALLED DIGITAL INTERFACE BOARD (BLD10),THREE INSTALLED 8 CHANNEL 60 SECOND ANNOUNCEMENT BOARDS (BLD3),THREE INSTALLED REMOTE RECORD BOARDS, (400B),CABLES,AND MOUNTING HARDWARE. REPL:J5D005C-1 L93	186 191 500		93A	1 1	J1C273A-1 ED5D505-10	11 78					
ASSEMBLED 15A ANALOG ANNOUNCE-MENT SYSTEM IN ADDITION TO MISCELLANEOUS CABINET LIST 1B OR 60C TO PROVIDE 16 CHANNELS WITH A MAXIMUM RECORDING LENGTH OF 60 SECONDS EACH. THIS LIST CONSISTS OF ONE SHELF, TWO INSTALLED 8 CHANNEL 60 SECOND ANNOUNCEMENT BOARDS (BLD3), AND TWO REMOTE RECORD BOARDS (400B). REPL:NONE	186 500		94	1 2	J1C267A-1 ED5D505-10	31 86					
ASSEMBLED 17A DIGITAL ANNOUNCE-MENT SYSTEM WITH 24 PORTS AND REMOTE RECORD CAPABILITY IN ADDITION TO MISCELLANEOUS CABINET LIST 1B OR 60C TO PROVIDE 166 ANNOUNCEMENTS WHICH CAN BE ACCESSED BY ANY PORT. 121 ANNOUNCEMENTS CAN BE UP TO 1 MIN. IN LENGTH, 30 UP TO 2 MIN., AND 15 UP TO 4 MIN.. THIS LIST CONSISTS OF ONE SHELF, ONE INSTALLED CONTROL UNIT BOARD (TN1881), ONE INSTALLED MEMORY UNIT BOARD (TN1882), ONE INSTALLED INTERFACE UNIT BOARD (TN1875), ONE INSTALLED ALARM CIRCUIT BOARD (506A), AND ONE 300 FOOT CABLE INSTALLATION KIT TO PROVIDE CABLING TO THE MAIN DISTRIBUTION FRAME (MDF) AND THE DIGITAL CROSS CONNECT (DSX). REPL:NONE	184 186 500		96	1	J1C275A-1	5					
ASSEMBLED 18A DIGITAL ANNOUNCE-MENT SYSTEM WITH TWO CHANNELS IN ADDITION TO MISCELLANEOUS CABINET LIST 1B OR 60C TO PROVIDE MAX. 70 SEC. RECORDING PER CHANNEL WHICH CAN BE DIVIDED INTO TWO SEPARATE MESSAGES (DAY/NIGHT). THIS LIST CONISTS OF ONE MOUNTING SHELF WITH TWO INDIVIDUALLY MOUNTED ANNOUNCERS. THIS UNIT CONNECTS TO LINE SIDE (TIP/RING). REPL:NONE	186 500		97								

TABLE-A CONTINUED

COPYRIGHT @ 2001 LUCENT TECHNOLOGIES
ALL RIGHTS RESERVED

BT13

5ESS SWITCHING EQUIPMENT
SPECIFICATION FOR
MISCELLANEOUS CABINET

DWG SIZE C2 | ISSUE 117

LUCENT TECHNOLOGIES INC | J5D005C-1 | SHEET A19 OF 86

PRINTED IN U.S.A.

TABLE A-FEATURES(CONTINUED)

EQUIPMENT DESCRIPTION	REF NOTE	RAT-ING	LIST OR GROUP	EQUIPMENT OR CIRCUIT DATA QTY	EQUIPMENT OR CIRCUIT	L/G OR FIG	WRG	APP	SD EQUIVALENT SCHEMATIC	FIG	OPT
ASSEMBLED 18A DIGITAL ANNOUNCE-MENT SYSTEM WITH TWO CHANNELS AND REMOTE RECORD CAPABILITY IN ADDITION TO MISCELLANEOUS CABINET LIST 1B OR 60C TO PROVIDE A MAXIMUM RECORDING LENGTH OF 3-1/2 MIN. PER CHANNEL WHICH CAN BE DIVIDED INTO TWO SEPARATE MESSAGES (DAY/NIGHT). THIS LIST CONSISTS OF ONE MOUNT-ING SHELF WITH TWO INDIVIDUALLY MOUNTED ANNOUNCERS. THIS UNIT CONNECTS TO LINE SIDE (TIP/RING) . REPL:NONE	186 500		98								
3000 CARRIER COMSPHERE MODEM SHELF REQUIRED IN ADDITION TO MISCELLANEOUS CABINET LIST 60C TO PROVIDE TERMINATION OF SCANS, RCV-DU, AND CELL-DU FROM 5ESS AND ECP 3B21 MACHINES. REPL:NONE			99	2 2	ED5D505-10 ED5D088-12	89 284					
EQUIPMENT REQUIRED IN ADDITON TO LIST 60C TO PROVIDE ONE MODULAR FUSE FILTER UNIT (MFFU) WITH EIGHT FEEDERS FOR THE DISTINCTIVE REMOTE MODULE (DRM) NETWORKING FEATURE. REPL:NONE	189 500		100	1 1 1 1 1 1 1 1	J5D003FJ-1 J5D003FJ-1 J5D003FJ-1 J5D003FJ-1 J5D003FJ-1 J5D003FJ-1 J5D003FJ-1 J5D003FJ-1	110 D N CH CK L2 L4 L6					
EQUIPMENT REQUIRED IN ADDITION TO LIST 60C TO PROVIDE THE CONVERSION OF EXISTING SWITCH-ING CONTROL CENTER SYSTEM (SCCS) PROTOCOL TO TRANSMISSION CONTROL PROTOCOL/INTERNET PROTOCOL (TCP/IP) AND ENABLE THE ROUTING OF SCCS MESSAGES TO AND FROM THE NETWORK OPERATION CENTER (NOC) VIA THE 3B21D MTTY TERMINAL INTERFACE. <5E13(3) OR LATER> REPL:NONE	190 500		101	2 2 2	ED5D507-17 ED3T076-20 ED5D507-17	140 51 139					
EQUIPMENT REQUIRED IN ADDITION TO LIST 60C TO PROVIDE TWO 115VAC 64KBPS RS-232 INTERFACE CONVERTERS, MOUNTING HARDWARE, AND CABLES FOR THE NAR APPLICATION OF THE "7 R/E NOW" FIXED CONFIGURATION FEATURE OF THE 5ESS MISCELLANEOUS CABINET. REPL:NONE	191		102	2 2	ED5D764-35 ED5D764-35	102 109					
EQUIPMENT REQUIRED IN ADDITION TO LIST 60C TO PROVIDE ONE -48VDC 300MHZ SINGLE PROCESSOR SUN NETRA-T 1120 WITH 256 MB RAM , (2) 9.1 GB DISK DRIVES, (1) DDS3 TAPE DRIVE, (1) CD32 CD DRIVE, (2) SERIAL ASYNCHRONOUS INTERFACE (SAI-0 & SAI-1) PCI CARDS WITH 8 RS232 PORTS EACH, (1) HIGH SPEED INTERFACE (HSI) PCI CARD, (1) QUAD ETHERNET (QFE) CARD IN NETRA-T PCI-4 SLOT , MOUNTING KIT, POWER CABLES, AND FUSES FOR THE NAR APPLICATION OF THE "7 R/E NOW" FIXED CONFIGURATION FEATURE OF THE 5ESS MISCELLANEOUS CABINET. REPL:NONE	191		103	1 1 1 1 1 1	ED5D764-35 ED5D764-35 ED5D764-35 ED5D764-35 ED5D764-35 ED5D839-15	10 13 15 16 18 4					
EQUIPMENT REQUIRED IN ADDITION TO LIST 60C TO PROVIDE ONE PATCH PANEL MOUNTING BRACKET ASSEMBLY, (2) PATCH PANELS, (1) CROSSOVER MEDIA CONVERTER, (1) SERIAL/ PARALLEL CONVERTER, CABLES, AND LABELS FOR THE NAR APPLICATION OF THE "7 R/E NOW" FIXED CONFIGURATION FEATURE OF THE 5ESS MISCELLANEOUS CABINET. REPL:NONE	191		104								

TABLE-A CONTINUED

TABLE A-FEATURES(CONTINUED)

EQUIPMENT DESCRIPTION	REF NOTE	RAT-ING	LIST OR GROUP	EQUIPMENT OR CIRCUIT DATA QTY	EQUIPMENT OR CIRCUIT	L/G OR FIG	WRG	APP	SD EQUIVALENT SCHEMATIC	FIG	OPT
EQUIPMENT REQUIRED IN ADDITION TO LIST 60C TO PROVIDE SPLITTERS AND MOUNTING HARDWARE FOR THE NAR APPLICATION OF THE "7 R/E NOW" FIXED CONFIGURATION FEATURE OF THE 5ESS MISCELLANEOUS CABINET. REPL:NONE	191		105								
OPTIONAL EQUIPMENT REQUIRED IN ADDITION TO LIST 60C TO PROVIDE ONE -48VDC 300MHZ 512MB RAM 18.2 GB DISK DRIVE DUAL PROCESSOR SUN NETRA-T 1120 SERVER EQUIPPED WITH (6) 256 MEMORY EXPANSION, (1) ULTRASCSI DISK DRIVE, (1) 32X CD-ROM DRIVE, (1) 12GB DAT TAPE DRIVE, (2) 4 PORT QUAD ETHERNET BOARD, ALARM SOFTWARE, SOLARIS 2.6 SOFTWARE, POWER CABLES, FUSES, AND MOUNTING HARDWARE FOR THE NAR APPLICATION OF THE "7 R/E NOW" FIXED CONFIGURATION FEATURE OF THE 5ESS MISCELLANEOUS CABINET. REPL:NONE	191		106	1 1	ED5D839-15 ED5D764-35	4 13					
EQUIPMENT REQUIRED IN ADDITION TO LIST 91A TO PROVIDE A SECOND 3A SIMPLIFIED MESSAGE SYSTEM INTERFACE (3A SMSI) TRANSLATOR. REPL:NONE	191 500		107	1 1	ED5D709-30 ED5D709-30	20 C			SD5D171-01	E	
EQUIPMENT ALWAYS REQUIRED IN ADDITION TO LIST 3 OR 17. (MAXIMUM 1 LIST A PER LIST 3 OR LIST 17). DA EFF:07/18/94 FE/RA:NONE		DA	A								
EQUIPMENT REQUIRED IN ADDITION TO LIST 1 FOR ONE DIODE RESISTOR NETWORK TO PROVIDE A TERMINATION FOR THE 9TH OR HIGHER PROTOCOL CIRCUIT TEST, (ONE PER METALLIC ACCESS PACK, TN138 ON MTB 15). (SEE NOTE 62).		DA	B	1	J5D005AA-1	A					
EQUIPMENT REQUIRED IN ADDITION TO LIST 17A FOR TWO AUXILIARY CURRENT LIMITING RESISTOR NETWORKS TO PROVIDE BOARD TO BOARD TESTING, (ONE PER BOARD TO BOARD TEST CIRCUIT).	62 500		C	1	J5D005AA-1	B					
EQUIPMENT REQUIRED IN ADDITION TO LIST 17A FOR EIGHT AUXILIARY CURRENT LIMITING RESISTOR NETWORKS TO PROVIDE BATTERY AND GROUND FOR THE RSM ALARM STATUS PANEL.	62 500		D	1	J5D005AA-1	C					
EQUIPMENT REQUIRED IN ADDITION TO LIST 10 OR 10A OR 61-61B TO PROVIDE FUSES. (ATU 1 THRU 5). DA EFF:05/09/94 FE/RA:NONE		DA	E	1	SD5D130-01	12					

TABLE-A CONTINUED

COPYRIGHT @ 2001 LUCENT TECHNOLOGIES
ALL RIGHTS RESERVED

BT13

5ESS SWITCHING EQUIPMENT
SPECIFICATION FOR
MISCELLANEOUS CABINET

DWG SIZE C2 | ISSUE 117

LUCENT TECHNOLOGIES INC | J5D005C-1 | SHEET A20 OF 86

PRINTED IN U.S.A.

TABLE A-FEATURES(CONTINUED)

EQUIPMENT				EQUIPMENT OR CIRCUIT DATA					SD EQUIVALENT		
DESCRIPTION	REF NOTE	RAT-ING	LIST OR GROUP	QTY	EQUIPMENT OR CIRCUIT	L/G OR FIG	WRG	APP	SCHEMATIC	FIG	OPT
EQUIPMENT REQUIRED IN ADDITION TO LIST 10 OR 10A OR 61-61B TO PROVIDE FUSES. (ATU 6 THRU 23). DA EFF:05/09/94 FE/RA:NONE		DA	F	1	SD5D130-01	12					
EQUIPMENT REQUIRED IN ADDITION TO LISTS 10 OR 10A OR 61-61B AND 12 TO PROVIDE FUSES. (ATU 24 THUR 46). DA EFF:05/09/94 FE/RA:NONE		DA	G	1	SD5D130-01	12					
EQUIPMENT REQUIRED IN ADDITION TO LISTS 12 AND 13 TO PROVIDE FUSES. (ATU 47 THRU 72). DA EFF:07/18/94 FE/RA:NONE		DA	H	1	SD5D130-01	12					
EQUIPMENT REQUIRED IN ADDITION TO LIST 14 TO PROVIDE FUSES. (ATU 73 THRU 78).		DA	I	1	SD5D130-01	12					
EQUIPMENT REQUIRED IN ADDITION TO LISTS 14 AND 15 TO PROVIDE FUSES. (ATU 79 THRU 115). DA EFF:07/18/94 FE/RA:NONE		DA	J	1	SD5D130-01	12					
EQUIPMENT REQUIRED IN ADDITION TO LIST 1 TO PROVIDE 6 FOOT CABINETS WITHOUT DOORS FOR APT ORDERS.		DA	K								
CABLE SUPPORTS (QUAN 2) REQUIRED IN ADDITION TO THE FIRST LIST 17A ONLY. REPL:NONE	500		L								
CABLE SUPPORT (QUAN 1) REQUIRED IN ADDITION TO THE 2ND,3RD, OR 4TH LIST 17A. REPL:NONE	500		M								
EQUIPMENT ALWAYS REQUIRED IN ADDITION TO LIST 3.		DA	N	1	J5D005AA-1	D					
EQUIPMENT ALWAYS REQUIRED IN ADDITION TO LIST 5,8 OR 9.		DA	O	1	J5D005AD-1	A					
EQUIPMENT REQUIRED IN ADDITION TO LIST 1 FOR OFFICES THAT REQUIRE IMPROVED 6 FT CABINETS.		DA	P								
EQUIPMENT REQUIRED IN ADDITION TO LIST 1 FOR OFFICES USING PALLETIZED EQUIPMENT COOLING AND CABLE ASSEMBLY (PECCA) PROVIDES IMPROVED 6 FT CABINETS.		DA	Q								
EQUIPMENT REQUIRED IN ADDITION TO LIST 1 & K TO PROVIDE 6 FOOT CABINETS WITHOUT DOORS FOR APT ORDERS FOR OFFICES THAT REQUIRE IMPROVED 6 FT CABINETS.		DA	R								
EQUIPMENT ALWAYS REQUIRED IN ADDITION TO LIST 2.		DA	T								
EQUIPMENT REQUIRED IN ADDITION TO LIST 14 TO PROVIDE FUSES. (ATU 73 THRU 78). DA EFF:07/18/94 FE/RA:NONE		DA	V	1	SD5D130-01	12					
EQUIPMENT ALWAYS REQUIRED IN ADDITION TO LISTS 5 - 5B OR 8 - 8A OR 9 - 9D. DA EFF:04/01/97 FE/RA:NONE		DA	W	1	J5D005AD-1	A					
EQUIPMENT ALWAYS REQUIRED IN ADDITION TO LIST 5 - 5C AND IN ADDITION TO LIST 8 - 8A FOR OFFICES USING ISSUE 24 OR LATER OF THIS DRAWING. DA EFF:04/23/99 FE/RA:NONE		DA	X	1	J5D005AD-1	WA					

TABLE-A CONTINUED

TABLE A-FEATURES(CONTINUED)

EQUIPMENT				EQUIPMENT OR CIRCUIT DATA					SD EQUIVALENT		
DESCRIPTION	REF NOTE	RAT-ING	LIST OR GROUP	QTY	EQUIPMENT OR CIRCUIT	L/G OR FIG	WRG	APP	SCHEMATIC	FIG	OPT
EQUIPMENT ALWAYS REQUIRED IN ADDITION TO LIST 1. (SEE LIST 1A).		DA	Y	2 OMIT132 1 OMIT131 1 OMIT131	J5D003AU-2 J5D003AU-1 J5D003AU-2 J5D003AU-1 J5D003AU-2 J5D003AU-1	5,WG 1,WH C,SF SA SG SB					
EQUIPMENT REQUIRED IN ADDITION TO LIST 1 OR 10 ONLY WHEN THIS CABINET IS ADDED AS GROWTH TO AN EXISTING OFFICE AND THIS OFFICE IS NOT A JOINT VENTURE (APT) OFFICE, A PBX OFFICE NOR AN OFFICE EQUIPPED FOR PALLETIZATION (PECCA). PROVIDES CABINET, BEZELS & IMPROVED DOORS. (SEE NOTES 69 & 83). THIS LIST SHOULD NOT BE ORDERED FOR CABINETS SCHEDULED TO SHIP ON JULY 1, 1989 OR LATER, SPECIFY LIST AB.		DA	Z	1 OMIT131	ED5D184-72 ED5D184-70	1 2					
EQUIPMENT REQUIRED IN ADDITION TO LIST 1 OR 10 ONLY WHEN THIS CABINET IS ADDED AS GROWTH TO AN EXISTING JOINT VENTURE (APT) OFFICE. PROVIDES CABINET. (SEE NOTE 69)		DA	AA	1 OMIT131	ED5D184-72 ED5D184-70	1 2					
EQUIPMENT REQUIRED IN ADDITION TO LIST 1 OR 10 FOR ALL NEW ORDERS, INCLUDING PALLETIZED OFFICES, WITH THE EXCEPTION OF PBX OR JOINT VENTURE (APT) ORDERS. THIS LIST SHOULD ALSO BE SPECIFIED FOR GROWTH IN OFFICES THAT SHIPPED AFTER SEPTEMBER 27, 1986. PROVIDES CABINET, BEZELS & IMPROVED DOORS. (SEE NOTE 69). (SEE LIST 1A).		DA	AB	1 OMIT131	ED5D184-73 ED5D184-70	3 2					
EQUIPMENT REQUIRED IN ADDITION TO LIST 1 OR 10 FOR NEW ORDERS FOR OFFICES USING PALLETIZED EQUIPMENT COOLING AND CABLE ASSEMBLY (PECCA). PROVIDES CABINET, BEZELS & IMPROVED DOORS. (SEE NOTE 69)		DA	AC	1 OMIT131	ED5D184-73 ED5D184-70	3 2					
EQUIPMENT REQUIRED IN ADDITION TO LIST 1 OR 1A,10 OR 10A FOR NEW JOINT VENTURE (APT) ORDERS. PROVIDES CABINET. DA EFF:06/11/93 FE:J5D005C-1,LCH	69 97	DA	AD	OMIT131 OMIT131 1	ED5D184-73 ED5D184-74 ED5D184-74	1 7 10					
EQUIPMENT REQUIRED IN ADDITION TO LIST 1 FOR PBX APPLICATIONS, WITH OR WITHOUT PALLETIZATION. PROVIDES CABINET, BEZELS & IMPROVED DOORS. (SEE NOTE 69) (SEE LIST BN).		DA	AE	1 OMIT131	ED5D184-73 ED5D184-70	3 2					
EQUIPMENT REQUIRED IN ADDITION TO LIST 1 FOR PBX APPLICATIONS EQUIPPED FOR PALLETIZATION (PECCA). PROVIDES CABINET, BEZELS & IMPROVED DOORS. (SEE NOTE 69)		DA	AF	1 OMIT131	ED5D184-73 ED5D184-70	3 2					

TABLE-A CONTINUED

COPYRIGHT @ 2001 LUCENT TECHNOLOGIES
ALL RIGHTS RESERVED

BT13

5ESS SWITCHING EQUIPMENT
SPECIFICATION FOR
MISCELLANEOUS CABINET

DWG SIZE C2 | ISSUE 117

LUCENT TECHNOLOGIES INC | J5D005C-1 | SHEET A21 OF 86

PRINTED IN U.S.A.

TABLE A-FEATURES(CONTINUED)

EQUIPMENT				EQUIPMENT OR CIRCUIT DATA					SD EQUIVALENT		
DESCRIPTION	REF NOTE	RAT-ING	LIST OR GROUP	QTY	EQUIPMENT OR CIRCUIT	L/G OR FIG	WRG	APP	SCHEMATIC	FIG	OPT
EQUIPMENT REQUIRED IN ADDITION TO LIST 16,16A, OR 16B WHEN THE REMOTE ALARM RELAY UNIT WILL BE USED FOR VISUAL ALARMS AND CO-EXISTS WITH THE OFFICE ALARM UNIT IN THE SAME CABINET.	80 500		AG	1 1	SD5D130-01 ED5D505-16	17 1	S				
EQUIPMENT REQUIRED IN ADDITION TO LIST 16 WHEN THE REMOTE ALARM RELAY UNIT WILL BE USED FOR AUDIBLE ALARMS AND CO-EXISTS WITH THE OFFICE ALARM UNIT IN THE SAME CABINET.		DA	AH	1	SD5D130-01	17	M				
EQUIPMENT AND WIRING ALWAYS REQUIRED IN ADDITION TO LIST 20 OR 20A WHEN LIST 6 IS PROVIDED. DA EFF:07/18/94 FE/RA:NONE		DA	AJ	2 1	ED5D507-16 ED5D507-16	6 7,8					
EQUIPMENT AND WIRING ALWAYS REQUIRED IN ADDITION TO LIST 20 - 20A WHEN LIST 6 IS NOT PROVIDED. DA EFF:02/29/00 FE/RA:NONE	97	DA	AK	4	ED5D507-16	9					
EQUIPMENT REQUIRED IN ADDITION TO LIST AB FOR AUTOVON (HARDENED) SITES. PROVIDES STEEL DOORS.		DA	AL								
EQUIPMENT REQUIRED IN ADDITION TO LIST AC FOR AUTOVON (HARDENED) SITES. PROVIDES STEEL DOORS.		DA	AM								
EQUIPMENT REQUIRED IN ADDITION TO LIST 27 OR 27A WHEN 14A RECORDED ANNOUNCEMENT UNITS ARE PROVIDED FOR LINESIDE INTERFACE (NOT REQUIRED FOR TRUNK SIDE). GENERIC 5E2(1) 5EE2 OR LATER. <5E2(1) OR LATER> <5EE2 OR LATER> DA EFF:04/23/99 FE/RA:NONE	80 97	DA	AN								
EQUIPMENT REQUIRED IN ADDITION TO LIST 16,16A, OR 16B WHEN THE REMOTE ALARM RELAY UNIT IS CONNECTED TO AN AUDIBLE ALARM PANEL(ED5D141-10) (GENERIC 5E2(1), 5EE2). <5E2(1)> <5EE2> DA EFF:04/23/99 FE/RA:NONE		DA	AP	1	J5D005CB-1	WA					
EQUIPMENT REQUIRED IN ADDITION TO LIST 16B WHEN THE REMOTE ALARM RELAY UNIT IS CONNECTED TO AN AUDIBLE ALARM PANEL(ED5D141-10) (GENERIC 5E2(1), 5EE2). <5E2(1)> <5EE2> REPL:J5D005C-1 LAP			AQ	1	J5D005CB-1	3	M		SD5D017-01		3
EQUIPMENT REQUIRED IN ADDITION TO LIST 16,16A, OR 16B WHEN THE REMOTE ALARM RELAY UNIT WILL BE USED FOR AUDIBLE ALARMS AND CO-EXISTS WITH THE OFFICE ALARM UNIT IN THE SAME CABINET. (GENERIC 5E2(1),5EE(2)). <5E2(1)> <5EE(2)>	500		AR	1	SD5D130-01	7	J				
EQUIPMENT ALWAYS REQUIRED IN ADDITION TO LIST 5 - 5C AND IN ADDITION TO LIST 8 - 8A FOR ALL OFFICES USING ISSUE 41 OR LATER OF THIS DRAWING. DA EFF:04/23/99 FE/RA:NONE		DA	AS	1	J5D005AD-1	WB					

TABLE-A CONTINUED

TABLE A-FEATURES(CONTINUED)

EQUIPMENT				EQUIPMENT OR CIRCUIT DATA					SD EQUIVALENT		
DESCRIPTION	REF NOTE	RAT-ING	LIST OR GROUP	QTY	EQUIPMENT OR CIRCUIT	L/G OR FIG	WRG	APP	SCHEMATIC	FIG	OPT
EQUIPMENT REQUIRED IN ADDITION TO LIST AB WHEN LIST AL IS NOT SPECIFIED. PROVIDES STEEL DOORS.		DA	AT								
EQUIPMENT REQUIRED IN ADDITION TO LIST AC WHEN LIST AM IS NOT SPECIFIED. PROVIDES STEEL DOORS.		DA	AU								
ALWAYS REQUIRED IN ADDITION TO LIST AE TO PROVIDE STEEL DOORS.		DA	AV								
ALWAYS REQUIRED IN ADDITION TO LIST AF TO PROVIDE STEEL DOORS.		DA	AW								
CABLE SUPPORT (QUAN 1) REQUIRED IN ADDITION TO REMOTE ALARM RELAY UNIT LIST 16B WHEN IT IS NOT MOUNTED ADJACENT TO OTHER UNITS IN THE SAME CABINET.	500		AX								
ALWAYS REQUIRED IN ADDITION TO LIST AB TO PROVIDE FULL PERFORATED DOORS, FRONT AND REAR. (SEE GROUP 1A).		DA	AY								
ALWAYS REQUIRED IN ADDITION TO LIST AE TO PROVIDE FULL PERFORATED DOORS, FRONT AND REAR. DA EFF:09/04/91 FE/RA:NONE		DA	AZ								
EQUIPMENT AND WIRING ALWAYS REQUIRED IN ADDITION TO THE FIRST LIST 28 OR 28A. DA EFF:04/23/99 FE/RA:NONE		DA	BA	1 1	ED5D505-15 ED5D505-15	10, 11					
EQUIPMENT AND WIRING ALWAYS REQUIRED IN ADDITION TO THE SECOND LIST 28 OR 28A DA EFF:04/23/99 FE/RA:NONE		DA	BB	1 1	ED5D505-15 ED5D505-15	12, 13					
RESISTOR ALWAYS REQUIRED IN ADDITION TO TWO AUXILLARY CURRENT LIMITING RESISTOR NETWORK LIST C.	500		BC	1	J5D005AA-1	E					
PDCP COVER ASSEMBLY ALWAYS REQUIRED IN ADDITION TO LIST 20C .	500		BD								
CABLE SUPPORT (QUAN 1) ALWAYS REQUIRED IN ADDITION TO TRANSMISSION RATE CONVERTER UNIT MODEL 2 (TRCU2) LIST 40B.	171 500		BE								
EQUIPMENT ALWAYS REQUIRED IN ADDITION TO LIST Y. (SEE LIST 1A).		DA	BF	2	J5D003AU-2	E					
EQUIPMENT ALWAYS REQUIRED IN ADDITION TO LIST 24 OR 25.		DA	BG	1	J5D003ED-1	B					
EQUIPMENT ALWAYS REQUIRED IN ADDITION TO LIST 42 TO PROVIDE NEW FAN UNIT. (SEE LIST 42A).		DA	BH	1 OMIT131	J5D003BE-2 J5D003BE-2	4 3					

TABLE-A CONTINUED

COPYRIGHT @ 2001 LUCENT TECHNOLOGIES
ALL RIGHTS RESERVED

BT13

5ESS SWITCHING EQUIPMENT
SPECIFICATION FOR
MISCELLANEOUS CABINET

DWG SIZE C2 | ISSUE 117

LUCENT TECHNOLOGIES INC | J5D005C-1 | SHEET A22 OF 86

PRINTED IN U.S.A.

TABLE A-FEATURES(CONTINUED)

EQUIPMENT				EQUIPMENT OR CIRCUIT DATA					SD EQUIVALENT		
DESCRIPTION	REF NOTE	RAT-ING	LIST OR GROUP	QTY	EQUIPMENT OR CIRCUIT	L/G OR FIG	WRG	APP	SCHEMATIC	FIG	OPT
EQUIPMENT REQUIRED IN ADDITION TO LIST 5 - 5C FOR HARDENED AUTOVON SITES. DA EFF:04/23/99 FE/RA:NONE		DA	BJ	1	J5D005AD-1	B					
EQUIPMENT REQUIRED IN ADDITION TO LIST 8 OR 8A FOR HARDENED AUTOVON SITES. DA EFF:04/23/99 FE/RA:NONE		DA	BK	1	J5D005AD-1	B,C					
EQUIPMENT REQUIRED IN ADDITION TO LIST 9,9A,9B,9C OR 9D FOR HARDENED AUTOVON SITES. DA EFF:04/23/99 FE/RA:NONE		DA	BL	1	J5D005AD-1	B,D					
EQUIPMENT REQUIRED IN ADDITION TO LIST 1A TO PROVIDE BEZELS FOR FUSE ALARM. DA EFF:07/18/94 FE/RA:NONE	92	DA	BM	1 1 1 1	ED5D503-15 ED5D694-30 ED5D694-30 ED5D503-15	1268 1 2 1250					
EQUIPMENT REQUIRED IN ADDITION TO LIST 1A FOR PBX APPLICATIONS WITH OR WITHOUT PALLETIZATION. PROVIDES CABINET BEZELS FOR EMI. DA EFF:08/10/92 FE/RA:NONE		DA	BN	1 OMIT131 OMIT132 1	ED5D184-73 ED5D184-74 ED5D695-10 ED5D505-16	3 7 1316 5					
EQUIPMENT REQUIRED IN ADDITION TO LIST 1A,1B OR 10A PROVIDES PERFORATED DOORS. DA EFF:04/23/99 FE/RA:NONE	99 100 152	DA	BP								
EQUIPMENT ALWAYS REQUIRED IN ADDITION TO LIST BN, PROVIDES DOORS FOR EMI DA EFF:08/10/92 FE:J5D005C-1,LCB		DA	BR	1							
EQUIPMENT REQUIRED WHEN A WASHABLE REPLACEMENT AIR FILTER IS DESIRABLE FOR EITHER THE J5D003BE OR J5D003BN FAN UNIT. DA EFF:04/23/99 FE/RA:NONE	94	DA	BS								
RESISTOR REQUIRED IN ADDITION TO RESISTOR PANEL LIST 17A TO ADD CURRENT LIMITING RESISTORS FOR PAIR GAIN TEST CONTROLLER (PGTC).	500		BT	1	J5D005AA-1	F					
EQUIPMENT ALWAYS REQUIRED IN ADDITION TO LIST 56 & 78 TO PROVIDE A WIRE SUPPORT FOR EACH 15A & 16A RECORDED ANNOUNCEMENT SYSTEM PROVIDED. DA EFF:02/29/00 FE:J5D005C-1 LGP FE:J5D005C-1 LGQ		DA	BU								
WIRING ALWAYS REQUIRED IN ADDITION TO LIST 5-5C TO ARRANGE UNIT FOR SCAN POINTS 96-119.SPECIFY FOR ALL JOBS USING ISSUE 76 OR LATER. DA EFF:04/23/99 FE/RA:NONE		DA	BW	1	J5D005AD-1	WC					
EQUIPMENT REQUIRED IN ADDITON TO LIST 5 OR 5A PROVIDES LABLES. DA EFF:06/24/94 FE:J5D005C-1,LCP		DA	BX	1	J5D005AD-1	E					
REQUIRED IN ADDITION TO LIST 54 TO PROVIDED A LABEL FOR THE MODULAR FUSE FILTER UNIT WHEN THE BUSS IS SPLIT BETWEEN BUSS A AND BUSS B. REPL:NONE DA EFF:04/01/93 FE/RA:NONE		DA	BY	1	J5D003FJ-1	C					

TABLE-A CONTINUED

TABLE A-FEATURES(CONTINUED)

EQUIPMENT				EQUIPMENT OR CIRCUIT DATA					SD EQUIVALENT		
DESCRIPTION	REF NOTE	RAT-ING	LIST OR GROUP	QTY	EQUIPMENT OR CIRCUIT	L/G OR FIG	WRG	APP	SCHEMATIC	FIG	OPT
BLANK MODULAR FUSE FILTER UNIT (MFFU) LABELS (QUAN 3) REQUIRED IN ADDITION TO MFFU LIST 54 WHEN MOUNTED IN 5ESS CLASSIC CABINET LIST 1B. REPL:NONE	500		BZ	1	ED5D088-10	475A 475B 475C					
EQUIPMENT REQUIRED IN ADDITION TO LIST 27A WHEN 14A RECORDED ANNOUNCEMENT UNITS ARE PROVIDED FOR LINE SIDE INTERFACE (NOT REQUIRED FOR TRUNK SIDE). THIS PROVIDES FOR THE MODULAR FUSE FILTER UNIT <5E2(1) OR LATER> <5EE2 OR LATER> REPL:NONE DA EFF:04/23/99 FE/RA:NONE	80 97	DA	CA								
EQUIPMENT REQUIRED IN ADDITION TO LIST 1A OR 1B FOR OFFICES SUBJECT TO EMC REQUIREMENTS. PROVIDES DOORS AND GASKETS. REPL:NONE DA EFF:04/23/99 FE/RA:NONE	99 100 154	DA	CB	1	ED5D184-76	G2					
EQUIPMENT AND WIRING ALWAYS REQUIRED IN ADDITION TO LIST 20B WHEN LIST 6 IS NOT PROVIDED DA EFF:04/01/93 FE/RA:NONE	97	DA	CC	4	ED5D507-16	10					
BEZELS WITHOUT UL LISTING INFORMATION REQUIRED IN ADDITION TO 5ESS CLASSIC CABINET LIST 1B TO PROVIDE FUSE ALARMS FOR THE MODULAR FUSE FILTER UNIT (MFFU). REPL:NONE	92 97 152 500		CD	1 1 1	ED5D694-30 ED5D694-30 ED5D693-15	1 2 30A					
EQUIPMENT REQUIRED IN ADDITION TO LIST 1B OR 10 OR 10A FOR NEW JOINT VENTURE (APT) ORDERS. PROVIDES CABINET. DA EFF:06/11/93 FE:J5D005C-1,LCH	69 97	DA	CE	OMIT131 OMIT131 OMIT131 1	ED5D184-73 ED5D184-74 ED5D184-74 ED5D184-74	1 7 7A 10					
EQUIPMENT ALWAYS REQUIRED IN ADDITION TO LIST 1B TO PROVIDE NEBS EARTHQUAKE CABINET. DA EFF:04/01/97 FE/RA:NONE		DA	CF	OMIT131 1	ED5D184-74 ED5D184-74	7A 7B					
EQUIPMENT ALWAYS REQUIRED IN ADDITION TO LIST 10A TO PROVIDE NEBS EARTHQUAKE CABINET. DA EFF:07/18/94 FE/RA:NONE		DA	CG	OMIT131 1	ED5D184-74 ED5D184-74	7 7B					
EQUIPMENT REQUIRED IN ADDITION TO LISTS 1B OR 10A FOR NEW JOINT VENTURE (APT) ORDERS.PROVIDE NEBS EARTHQUAKE CABINET.	500		CH	OMIT131 1	ED5D184-74 ED5D184-74	7B 10B					

TABLE-A CONTINUED

COPYRIGHT @ 2001 LUCENT TECHNOLOGIES
ALL RIGHTS RESERVED

BT13

5ESS SWITCHING EQUIPMENT
SPECIFICATION FOR
MISCELLANEOUS CABINET

DWG SIZE C2 | ISSUE 117

LUCENT TECHNOLOGIES INC | J5D005C-1 | SHEET A23 OF 86

PRINTED IN U.S.A.

TABLE A-FEATURES(CONTINUED)

EQUIPMENT				EQUIPMENT OR CIRCUIT DATA					SD EQUIVALENT		
DESCRIPTION	REF NOTE	RAT-ING	LIST OR GROUP	QTY	EQUIPMENT OR CIRCUIT	L/G OR FIG	WRG	APP	SCHEMATIC	FIG	OPT
EQUIPMENT REQUIRED IN ADDITION TO LIST 62 FOR OFFICES SUBJECT TO EMC REQUIREMENTS.PROVIDES GASKETS EQUIPPED FOR THE 5ESS-2000 CABINET NEW LOOK. REPL:NONE DA EFF:02/29/00 FE/RA:NONE	100 152 154	DA	CJ	1	ED5D744-70	6					
EQUIPMENT REQUIRED IN ADDITION TO LIST 1B TO PROVIDE BEZELS WITH UL LISTING INFORMATION FOR FUSE ALARM FOR THE MODULAR FUSE FILTER UNIT. (FAN/FUSE) NON-RSM ONLY. REPL:NONE	92 97 152 500		CK	1 1 1	ED5D694-30 ED5D694-30 ED5D693-15	1 4 30A					
EQUIPMENT REQUIRED IN ADDITION TO LIST 54 TO PROVIDE A MODULAR FUSE/FILTER UNIT WHEN IT MOUNTS IN THE CLASSIC OR 5ESS-2000 CABINET. REPL:NONE			CL	1	J5D003FJ-1	CH					
EQUIPMENT REQUIRED IN ADDITION TO LISTS CL AND 60-60C WHEN THE MODULAR FUSE/FILTER UNIT MOUNTS IN A 5ESS-2000 CABINET. REPL:NONE FE:J5D005C-1,LCV DA EFF:06/09/95		DA	CM	1	J5D003FJ-1	CK					
CABLING REQUIRED IN ADDITION TO LIST 5B FOR AN OFFICE ALARM UNIT IF A DEAD SYSTEM ALARM IS REQUIRED. DA EFF:06/24/94 FE/RA:NONE		DA	CN								
EQUIPMENT REQUIRED IN ADDITION TO LIST 5D. PROVIDES LABELS FOR OFFICE ALARM UNIT. REPL:J5D005C-1,LBX DA EFF:04/23/99 FE/RA:NONE		DA	CP	1	J5D005AD-1	F					
MODULAR FUSE FILTER UNIT (MFFU) FUSE, LABEL, AND POWER CABLE REQUIRED IN ADDITION TO EACH LIST 59,73,74,75, OR 86 CIRCUIT MODULE ORDERED WITH/FOR LIST 56 15A ANNOUNCEMENT SYSTEM MOUNTED IN A 5ESS CLASSIC CABINET LIST 1B. REPL:NONE	500		CQ	1 1	ED5D088-10 ED5D505-10	615 86					
16A ANNOUNCEMENT SYSTEM FUSE LABEL REQUIRED IN ADDITION TO EACH LIST 78 OR 93 MOUNTED IN A 5ESS CLASSIC CABINET LIST 1B. REPL:NONE	500		CR	1	ED5D088-10	616					
MODULAR FUSE FILTER UNIT (MFFU) FUSE, LABEL, AND POWER CABLE REQUIRED IN ADDITION TO EACH LIST 59,73,74,75, OR 86 CIRCUIT MODULE ORDERED WITH/FOR LIST 56 15A ANNOUNCEMENT SYSTEM MOUNTED IN A 5ESS-2000 CABINET LIST 60C. REPL:NONE	500		CS	1 1	ED5D088-12 ED5D505-10	92 86					
16A ANNOUNCEMENT SYSTEM FUSE LABEL REQUIRED IN ADDITION TO EACH LIST 78 OR 93 MOUNTED IN A 5ESS-2000 CABINET LIST 60C. REPL:NONE	500		CT	1	ED5D088-12	93					
EQUIPMENT REQUIRED TO PROVIDE MOUNTING BRACKETS TO REDUCE FRAME FOR 23" MOUNTING PLATES. SPECIAL FIELD APPLICATIONS ONLY. DA EFF:04/23/99 FE/RA:NONE		DA	CU								
EQUIPMENT REQUIRED IN ADDITION TO LISTS CL AND 60-60C WHEN THE MODULAR FUSE/FILTER UNIT MOUNTS IN A 5ESS-2000 CABINET. REPL:J5D005C-1,LCM			CV	1 1	J5D003FJ-1 J5D003FJ-1	CK CR					

TABLE-A CONTINUED

TABLE A-FEATURES(CONTINUED)

EQUIPMENT				EQUIPMENT OR CIRCUIT DATA					SD EQUIVALENT		
DESCRIPTION	REF NOTE	RAT-ING	LIST OR GROUP	QTY	EQUIPMENT OR CIRCUIT	L/G OR FIG	WRG	APP	SCHEMATIC	FIG	OPT
EQUIPMENT REQUIRED IN ADDITION TO LIST 60C TO PROVIDE A DOOR ASSEMBLY KIT FOR EMC TREATMENT APPLICATIONS. REPL:J5D005C-1,L62 DA EFF:04/23/99 FE/RA:NONE		DA	DA	1	ED5D785-70	2B					
EQUIPMENT REQUIRED IN ADDITION TO LIST 60C TO PROVIDE A DOOR ASSEMBLY KIT FOR NON-EMC TREATMENT APPLICATIONS. REPL:J5D005C-1,L62A DA EFF:04/23/99 FE/RA:NONE		DA	DB	1	ED5D785-70	2A					
EQUIPMENT REQUIRED IN ADDITION TO LIST 60C, WHEN L20C IS NOT EQUIPPED, TO PROVIDE ONE FUSE/ FAN ALARM AND ONE BLANK INDICATOR STRIP KIT FOR EMC TREATMENT APPLICATIONS. REPL:J5D005C-1,L63 DA EFF:04/23/99 FE:J5D005C-1,GF	165	DA	DC	1 1	ED5D785-70 ED5D785-70	3B 3D					
EQUIPMENT REQUIRED IN ADDITION TO LIST 60C, WHEN L20C IS NOT EQUIPPED, TO PROVIDE ONE FUSE/ FAN AND ONE BLANK FUSE/FAN ALARM INDICATOR STRIP KIT FOR NON-EMC TREATMENT APPLICATIONS. REPL:J5D005C-1,L63 DA EFF:04/23/99 FE:J5D005C-1,LGF	165	DA	DD	1 1	ED5D785-70 ED5D785-70	3A 3C					
EQUIPMENT REQUIRED IN ADDITION TO LIST 20B OR 20C WITH LIST 60C TO PROVIDE ONE FUSE/PDP ALARM AND ONE BLANK INDICATOR STRIP KIT FOR EMC TREATMENT APPLICATIONS. REPL:J5D005C-1,L64 DA EFF:04/23/99 FE:J5D005C-1,LGG	165	DA	DE	1 1	ED5D785-70 ED5D785-70	3F 3D					
EQUIPMENT REQUIRED IN ADDITION TO LIST 20B OR 20C WITH LIST 60C TO PROVIDE ONE FUSE/PDP ALARM AND ONE BLANK INDICATOR STRIP KIT FOR NON-EMC TREATMENT APPLICATIONS. REPL:J5D005C-1,L64 DA EFF:04/23/99 FE:J5D005C-1,LGG	165	DA	DF	1 1	ED5D785-70 ED5D785-70	3E 3C					
EQUIPMENT REQUIRED IN ADDITION TO LIST 60C TO PROVIDE ONE BLANK INDICATOR STRIP KIT FOR EMC TREATMENT APPLICATIONS. REPL:J5D005C-1,L63 DA EFF:04/01/97 FE/RA:NONE	172	DA	DG	1	ED5D785-70	3D					
EQUIPMENT REQUIRED IN ADDITION TO LIST 60C TO PROVIDE ONE BLANK INDICATOR STRIP KIT FOR NON-EMC TREATMENT APPLICATIONS. REPL:J5D005C-1,L63 DA EFF:04/01/97 FE/RA:NONE	172	DA	DH	1	ED5D785-70	3C					

TABLE-A CONTINUED

COPYRIGHT @ 2001 LUCENT TECHNOLOGIES
ALL RIGHTS RESERVED

BT13

5ESS SWITCHING EQUIPMENT
SPECIFICATION FOR
MISCELLANEOUS CABINET

DWG SIZE C2 | ISSUE 117

LUCENT TECHNOLOGIES INC | J5D005C-1 | SHEET A24 OF 86

PRINTED IN U.S.A.

TABLE A-FEATURES(CONTINUED)

EQUIPMENT				EQUIPMENT OR CIRCUIT DATA					SD EQUIVALENT		
DESCRIPTION	REF NOTE	RAT-ING	LIST OR GROUP	QTY	EQUIPMENT OR CIRCUIT	L/G OR FIG	WRG	APP	SCHEMATIC	FIG	OPT
EQUIPMENT REQUIRED IN ADDITION TO LIST 60C TO PROVIDE JUNCTIONING HARDWARE FOR ONE 5ESS-2000 GLOBAL CABINET IN NON-EMC TREATMENT APPLICATIONS. REPL:NONE	173 500		DJ								
EQUIPMENT REQUIRED IN ADDITION TO LIST 60C TO PROVIDE JUNCTIONING HARDWARE FOR ONE 5ESS-2000 GLOBAL CABINET IN EMC TREATMENT APPLICATIONS. REPL:NONE	173 500		DK								
EQUIPMENT AND WIRING REQUIRED IN ADDITION TO LIST 20B OR 20C WITH LIST 60C TO PROVIDE A FRONT AND REAR FUSE/PDP ALARM INDICATOR STRIP KIT FOR EMC TREATMENT APPLICATIONS. REPL:J5D005C-1,L71 DA EFF:04/23/99 FE:J5D005C-1,LGH	165	DA	DL	2	ED5D785-70	3F					
EQUIPMENT AND WIRING REQUIRED IN ADDITION TO LIST 20B OR 20C WITH LIST 60C TO PROVIDE A FRONT AND REAR FUSE/PDP ALARM INDICATOR STRIP KIT FOR NON-EMC TREATMENT APPLICATIONS. REPL:J5D005C-1,L71 DA EFF:04/23/99 FE:J5D005C-1,LGH	165	DA	DM	2	ED5D785-70	3E					
EQUIPMENT AND WIRING REQUIRED IN ADDITION TO LIST 60C OR 72A TO PROVIDE A FRONT AND REAR FUSE/ FAN INDICATOR STRIP FOR EMC TREATMENT APPLICATIONS. REPL:J5D005C-1,L70 DA EFF:04/23/99 FE:J5D005C-1,LGJ	165	DA	DN	2	ED5D785-70	3B					
EQUIPMENT AND WIRING REQUIRED IN ADDITION TO LIST 60C OR 72A TO PROVIDE A FRONT AND REAR FUSE/ FAN ALARM INDICATOR STRIP FOR NON-EMC TREATMENT APPLICATIONS. REPL:J5D005C-1,L70 DA EFF:04/23/99 FE:J5D005C-1,LGJ	165	DA	DO	2	ED5D785-70	3A					
EQUIPMENT REQUIRED IN ADDITION TO LIST 60C TO PROVIDE AN EMC FRAME ADDITION KIT. SUPPLIES FIELD INSTALLED EMC HARDWARE FOR A SINGLE CABINET. REPL:NONE DA EFF:04/23/99 FE/RA:NONE		DA	DP	1	ED5D785-70	4					
25" TO 23" MOUNTING PLATE ADAPTER FOR CUSTOMER TO FIELD MOUNT HIS 8" HIGH UNITS IN A 5ESS CLASSIC OR 5ESS-2000 MISCELLANEOUS CABINET THAT WAS ORDERED PRIOR TO ISSUE 108 OF THIS DRAWING. MAX UNIT LOAD PER SET OF ADAPTERS IS 40 LBS. REPL:NONE	177 500		DQ								
25" SHELF MOUNTING BRACKET REQUIRED IN ADDITION TO EACH LIST 5D,16B,17A,22A, WITH 1B. TO PROVIDE SHELF MOUNTING IN 5ESS CLASSIC MISCELLANEOUS CABINET ORDERED FROM THIS DRAWING USING ISSUE 108 OR LATER . REPL:NONE	176 500		DR								
25" SHELF MOUNTING BRACKET REQUIRED IN ADDITION TO EACH LIST 5D,16B,17A,22A, WITH 60C. TO PROVIDE SHELF MOUNTING IN A 5ESS-2000 MISCELLANEOUS CABINET ORDERED FROM THIS DRAWING USING ISSUE 108 AND LATER. (MAX 7 LIST DS PER LIST 60C) REPL:NONE	176 500		DS								

TABLE-A CONTINUED

TABLE A-FEATURES(CONTINUED)

EQUIPMENT				EQUIPMENT OR CIRCUIT DATA					SD EQUIVALENT		
DESCRIPTION	REF NOTE	RAT-ING	LIST OR GROUP	QTY	EQUIPMENT OR CIRCUIT	L/G OR FIG	WRG	APP	SCHEMATIC	FIG	OPT
25" SHELF MOUNTING BRACKET REQUIRED IN ADDITION TO EACH LIST 79A WITH 1B. TO PROVIDE MOUNTING FOR ONE 2KVA, -48VDC TO 110VAC INVERTER IN A 5ESS CLASSIC MISCELLANEOUS CABINET ORDERED FROM THIS DRAWING USING ISSUE 108 AND LATER. REPL:NONE DA EFF:02/29/00 FE/RA:NONE	500	DA	DT								
25" SHELF MOUNTING BRACKET REQUIRED IN ADDITION TO EACH LIST 79A WITH 60C. TO PROVIDE MOUNTING FOR ONE 2KVA, -48VDC TO 110VAC INVERTER MOUNTED IN A 5ESS-2000 MICELLANEOUS CABINET ORDERED FROM THIS DRAWING USING ISSUE 108 AND LATER. REPL:NONE DA EFF:02/29/00 FE/RA:NONE	500	DA	DU								
23" SHELF MOUNTING BRACKET FOR CUSTOMER TO MOUNT HIS 8" HIGH UNITS IN A 5ESS CLASSIC MISCELLANEOUS CABINET ORDERED FROM THIS DRAWING USING ISSUE 108 AND LATER. MAX SHELF UNIT LOAD FOR THESE BRACKETS IS 40 LBS. REPL:J5D005C-1,LCU	177 500		DV								
23" SHELF MOUNTING BRACKET FOR CUSTOMER TO MOUNT HIS 8" HIGH UNITS IN A 5ESS-2000 MISCELLANEOUS CABINET ORDERED FROM THIS DRAWING USING ISSUE 108 AND LATER. MAX SHELF UNIT LOAD FOR THESE BRACKETS IS 40 LBS. (MAX 7 LIST DW PER LIST 60C) REPL:J5D005C-1,LCU	177 500		DW								
ENGLISH FASTENERS (QUAN 2) REQUIRED IN ADDITION TO LISTS 20C, BU, OR BE WHEN LIST 1B CLASSIC CABINET IS SPECIFIED. REPL:NONE	500		FA								
ENGLISH FASTENERS (QUAN 4) REQUIRED IN ADDITION TO LIST BD WHEN LIST 1B CLASSIC CABINET IS SPECIFIED. REPL:NONE	500		FB								
ENGLISH FASTENERS (QUAN 6) REQUIRED IN ADDITION TO LISTS 40B OR 83 WHEN LIST 1B CLASSIC CABINET IS SPECIFIED. REPL:NONE	500		FC								

TABLE-A CONTINUED

COPYRIGHT @ 2001 LUCENT TECHNOLOGIES
ALL RIGHTS RESERVED

BT13

5ESS SWITCHING EQUIPMENT
SPECIFICATION FOR
MISCELLANEOUS CABINET

DWG SIZE C2 | ISSUE 117

LUCENT TECHNOLOGIES INC | J5D005C-1 | SHEET A25 OF 86

PRINTED IN U.S.A.

TABLE A-FEATURES(CONTINUED)

EQUIPMENT				EQUIPMENT OR CIRCUIT DATA					SD EQUIVALENT		
DESCRIPTION	REF NOTE	RAT-ING	LIST OR GROUP	QTY	EQUIPMENT OR CIRCUIT	L/G OR FIG	WRG	APP	SCHEMATIC	FIG	OPT
ENGLISH FASTENERS (QUAN 8) REQUIRED IN ADDITION TO LISTS 27A, 42C OR 42D WHEN LIST 1 - 1B CLASSIC CABINET OR LIST 60A OR 60B PHASE I 5ESS-2000 CABINET IS SPECIFIED. REPL:NONE DA EFF:04/23/99 FE/RA:NONE		DA	FD								
ENGLISH FASTENERS (QUAN 10) REQUIRED IN ADDITION TO LIST 84 WHEN LIST 1B CLASSIC CABINET IS SPECIFIED. REPL:NONE	500		FE								
ENGLISH FASTENERS (QUAN 12) REQUIRED IN ADDITION TO LISTS 41A, 44A, 65A, 67A, 41B, 67 OR 65B WHEN LIST 1 -1B CLASSIC CABINET OR 60A OR 60B PHASE I 5ESS-2000 CABINET IS SPECIFIED. REPL NONE DA EFF:04/23/99 FE/RA:NONE		DA	FF								
ENGLISH FASTENERS (QUAN 15) REQUIRED IN ADDITION TO LIST 46B WHEN LIST 1 - 1B CLASSIC CABINET OR 60A OR 60B PHASE I 5ESS-2000 CABINET IS SPECIFIED. REPL:NONE DA EFF:04/23/99 FE/RA:NONE		DA	FG								
ENGLISH FASTENERS (QUAN 16) REQUIRED IN ADDITION TO LIST 20C OR 84 WHEN LIST 1B CLASSIC CABINET IS SPECIFIED. REPL:NONE	500		FH								
ENGLISH FASTENERS (QUAN 2) REQUIRED IN ADDITION TO LISTS 63, 64 OR 66 WHEN LIST 1 - 1B CLASSIC CABINET OR 60A OR 60B PHASE I, 5ESS-2000 CABINET IS SPECIFIED. REPL:NONE DA EFF:04/23/99 FE/RA:NONE		DA	FI								
ENGLISH FASTENERS (QUAN 4) REQUIRED IN ADDITION TO LISTS 70, 71 OR 72 WHEN LIST 1 - 1B CLASSIC CABINET OR LIST 60A OR 60B 5ESS-2000 CABINET IS SPECIFIED. REPL:NONE DA EFF:04/23/99 FE/RA:NONE		DA	FJ								
ENGLISH FASTENERS (QUAN 14) REQUIRED IN ADDITION TO LIST 1B CLASSIC CABINET WITH LIST 85 1KVA DC/AC STATIC INVERTER. REPL:NONE	500		FK								
METRIC FASTENERS (QUAN 28) REQUIRED IN ADDITION TO LIST CU WHEN LIST 60C PHASE II, 5ESS-2000 CABINET IS SPECIFIED. DA EFF:04/23/99 FE/RA:NONE		DA	FO								
METRIC FASTENERS (QUAN 2) REQUIRED IN ADDITION TO LIST 20C, 84, 85, BU, OR BE WHEN LIST 60C 5ESS-2000 CABINET IS SPECIFIED. REPL:NONE	500		FP								
METRIC FASTENERS (QUAN 4) REQUIRED IN ADDITION TO LIST BD WHEN LIST 60C PHASE II 5ESS-2000 CABINET IS SPECIFIED. REPL:NONE	500		FQ								

TABLE-A CONTINUED

TABLE A-FEATURES(CONTINUED)

EQUIPMENT				EQUIPMENT OR CIRCUIT DATA					SD EQUIVALENT		
DESCRIPTION	REF NOTE	RAT-ING	LIST OR GROUP	QTY	EQUIPMENT OR CIRCUIT	L/G OR FIG	WRG	APP	SCHEMATIC	FIG	OPT
METRIC FASTENERS (QUAN 6) REQUIRED IN ADDITION TO LISTS 40B OR 83 WHEN LIST 60C 5ESS-2000 CABINET IS SPECIFIED. REPL:NONE	500		FR								
METRIC FASTENERS (QUAN 8) REQUIRED IN ADDITION TO LIST 79A WHEN LIST 60C 5ESS-2000 CABINET IS SPECIFIED. DA EFF:02/29/00 FE/RA:NONE	500	DA	FS								
METRIC FASTENERS (QUAN 10) REQUIRED IN ADDITION TO LIST 48A WHEN LIST 60C PHASE II, 5ESS-2000 CABINET IS SPECIFIED. REPL:NONE DA EFF:04/23/99 FE/RA:NONE		DA	FT								
METRIC FASTENERS (QUAN 12) REQUIRED IN ADDITION TO LIST 44A 67A, 44B, OR 67B WHEN LIST 60C PHASE II 5ESS-2000 CABINET IS SPECIFIED. REPL:NONE DA EFF:04/23/99 FE/RA:NONE		DA	FU								
METRIC FASTENERS (QUAN 15) REQUIRED IN ADDITION TO LIST 46B WHEN LIST 60C PHASE II, 5ESS-2000 CABINET IS SPECIFIED. REPL:NONE DA EFF:04/23/99 FE/RA:NONE		DA	FV								
METRIC FASTENERS (QUAN 16) REQUIRED IN ADDITION TO LIST 20C WHEN LIST 60C 5ESS-2000 CABINET IS SPECIFIED. REPL:NONE	500		FW								
ENGLISH FASTENERS (QUAN 38) REQUIRED IN ADDITION TO LIST 1 - 1B CLASSIC CABINET OR LIST 60A OR 60B WHEN A PHASE I 5ESS-2000 CABINET IS SPECIFIED. REPL:NONE DA EFF:04/23/99 FE/RA:NONE		DA	FX								
METRIC FASTENERS (QUAN 38) REQUIRED IN ADDITION TO LIST 60C WHEN THE 5ESS-2000 SWITCH CABINET IS SPECIFIED. REPL:NONE DA EFF:04/23/99 FE/RA:NONE		DA	FY								
REQUIRED IN ADDITION TO LIST CV WHEN THE CABINET IS DESTINED FOR THE U.S., U.S. COMMONWEALTHS OR CANADIAN MARKETS (EXCEPT QUEBEC) PROVIDES UL LABEL.			GA	1	J5D003FJ-1	CP					
EQUIPMENT REQUIRED IN ADDITION TO LIST CK OR CD AND 20C TO PROVIDE BEZEL CABLE FOR PDP/FAN. REPL:NONE			GB	1	ED5D693-15	30C					

TABLE-A CONTINUED

COPYRIGHT @ 2001 LUCENT TECHNOLOGIES
ALL RIGHTS RESERVED

BT13

5ESS SWITCHING EQUIPMENT
SPECIFICATION FOR
MISCELLANEOUS CABINET

DWG SIZE C2 | ISSUE 117

LUCENT TECHNOLOGIES INC | J5D005C-1 | SHEET A26 OF 86

PRINTED IN U.S.A.

TABLE A-FEATURES(CONTINUED)

EQUIPMENT				EQUIPMENT OR CIRCUIT DATA					SD EQUIVALENT		
DESCRIPTION	REF NOTE	RAT-ING	LIST OR GROUP	QTY	EQUIPMENT OR CIRCUIT	L/G OR FIG	WRG	APP	SCHEMATIC	FIG	OPT
EQUIPMENT REQUIRED IN ADDITION TO LISTS DE OR DF AND 20C TO PROVIDE FUSE/PDP ALARM INDICATOR STRIP CABLE. REPL:NONE DA EFF:04/01/97 FE/RA:NONE		DA	GC	1	ED5D734-14	45					
EQUIPMENT REQUIRED IN ADDITION TO LISTS DL OR DM AND 20C TO PROVIDE FUSE/PDP ALARM INDICATOR CABLE. REPL:NONE DA EFF:04/01/97 FE/RA:NONE		DA	GD	1	ED5D734-14	46					
A/C ELECTRICAL OUTLET BOX REQUIRED IN ADDITION TO LIST 79B,84, AND EACH SINGLE OR DUAL CONFIGURATION OF LIST(S) 85. REPL:NONE			GE								
FRONT INDICATOR STRIP LED CABLE REQUIRED IN ADDITION TO LIST 60C CABINET WITH LIST 54 MFFU FOR EMC & NON-EMC APPLICATIONS NOT REQUIRING LIST 20C POWER DISTRIBUTION PANEL OR LISTS 66C, 72B FAN UNIT. REPL:J5D005C-1 LDC REPL:J5D005C-1 LDD	499 500		GF	1	ED5D734-14	19					
FRONT INDICATOR STRIP LED CABLE REQUIRED IN ADDITION TO LIST 60C CABINET WITH LIST 54 MFFU AND LIST 20C POWER DISTRIBUTION PANEL FOR EMC & NON-EMC APPLICATIONS NOT REQUIRING LISTS 66C OR 72B FAN UNIT. REPL:J5D005C-1 LDE REPL:J5D005C-1 LDF	499 500		GG	1	ED5D734-14	45					
FRONT AND REAR INDICATOR STRIP LED CABLE REQUIRED IN ADDITON TO LIST 60C CABINET WITH LIST 54 MFFU AND LIST 20C POWER DISTRIBUTION PANEL FOR EMC & NON-EMC APPLICATIONS NOT REQUIRING LISTS 66C OR 72B FAN UNIT. REPL:J5D005C-1 LDL REPL:J5D005C-1 LDM	499 500		GH	1	ED5D734-14	46					
FRONT AND REAR INDICATOR STRIP LED CABLE REQUIRED IN ADDITION TO LIST 60C CABINET WITH LIST 54 OR 100 MFFU FOR EMC & NON-EMC APPLICATIONS NOT REQUIRING LIST 20C POWER DISTRIBUTION PANEL OR LISTS 66C,72B FAN UNIT. REPL:J5D005C-1,LDN,LDO	499 500		GJ	1	ED5D734-14	20					
CAUTION LABELS REQUIRED IN ADDITION TO LIST 83 WHEN THE AC OUTLET STRIP CIRCUIT IS CONFIGURED FOR "PROTECTED AC ONLY". REPL:NONE	183		GK								
CAUTION LABELS REQUIRED IN ADDITION TO LIST 83 WHEN THE AC OUTLET STRIP CIRCUIT IS CONFIGURED FOR "ESSENTIAL AC ONLY". REPL:NONE	182		GL								
FINAL ASSEMBLY KIT (FAS) REQUIRED IN ADDITION TO LIST 5D TO MOUNT AN OFFICE ALARM UNIT IN A 5ESS CLASSIC CABINET LIST 1B EQUIPPED WITH A MODULAR FUSE FILTER UNIT. REPL:NONE	500		GM								
FINAL ASSEMBLY KIT (FAS) REQUIRED IN ADDITION TO LIST 5D TO MOUNT AN OFFICE ALARM UNIT IN A 5ESS GLOBAL PHASE II CABINET LIST 60C. REPL:NONE	500		GN								

TABLE-A CONTINUED

TABLE A-FEATURES(CONTINUED)

EQUIPMENT				EQUIPMENT OR CIRCUIT DATA					SD EQUIVALENT		
DESCRIPTION	REF NOTE	RAT-ING	LIST OR GROUP	QTY	EQUIPMENT OR CIRCUIT	L/G OR FIG	WRG	APP	SCHEMATIC	FIG	OPT
APPARATUS BLANK KIT REQUIRED IN ADDITION TO OFFICE ALARM UNIT LIST 5D. REPL:NONE			GO								
CABLE SUPPORT AND SHELF MOUNTING SCREWS REQUIRED IN ADDITION TO EACH LIST 56,78,93,94,96,97,98, 99,GZ, MOUNTED IN A 5ESS CLASSIC CABINET LIST 1B. REPL:NONE	500		GP								
CABLE SUPPORT AND SHELF MOUNTING SCREWS REQUIRED IN ADDITION TO EACH LIST 56,78,93,94,96,97,98, 99,GZ, MOUNTED IN A 5ESS-2000 MISCELLANEOUS CABINET LIST 60C. REPL:NONE	500		GQ								
MODULAR FUSE FILTER UNIT (MMFU) LABELS REQUIRED IN ADDITION TO EACH 15A ANNOUNCEMENT SYSTEM LIST 94 TO BE MOUNTED IN A 5ESS CLASSIC CABINET LIST 1B. REPL:NONE	500		GR	2	ED5D088-10	615					
MODULAR FUSE FILTER UNIT (MFFU) LABELS REQUIRED IN ADDITION TO EACH 15A ANNOUNCEMENT SYSTEM LIST 94 TO BE MOUNTED IN A 5ESS-2000 CABINET LIST 60C. REPL:NONE	500		GS	2	ED5D088-12	92					
100 FOOT CABLE INSTALLATION KIT REQUIRED IN ADDITION TO 16A ANNOUNCEMENT SYSTEM LIST 78 OR 93 TO PROVIDE CABLING TO THE MAIN DISTRIBUTION FRAME (MDF) AND THE DIGITAL CROSS CONNECT (DSX). REPL:NONE	500		GT	1	J1C273A-1	21					
200 FOOT CABLE INSTALLATION KIT REQUIRED IN ADDITION TO 16A ANNOUNCEMENT SYSTEM LIST 78 OR 93 TO PROVIDE CABLING TO THE MAIN DISTRIBUTION FRAME (MDF) AND THE DIGITAL CROSS CONNECT (DSX). REPL:NONE	500		GU	1	J1C273A-1	22					
100 FOOT CABLE INSTALLATION KIT REQUIRED IN ADDITION TO 15A ANNOUNCEMENT SYSTEM LIST 56 OR 94 TO PROVIDE CABLING TO THE MAIN DISTRIBUTION FRAME (MDF). REPL:NONE	500		GV	1	J1C267A-1	41					
200 FOOT CABLE INSTALLATION KIT REQUIRED IN ADDITION TO 15A ANNOUNCEMENT SYSTEM LIST 56 OR 94 TO PROVIDE CABLING TO THE MAIN DISTRIBUTION FRAME (MDF). REPL:NONE	500		GW	1	J1C267A-1	42					

TABLE-A CONTINUED

COPYRIGHT @ 2001 LUCENT TECHNOLOGIES
ALL RIGHTS RESERVED

BT13

5ESS SWITCHING EQUIPMENT
SPECIFICATION FOR
MISCELLANEOUS CABINET

DWG SIZE C2 | ISSUE 117

LUCENT TECHNOLOGIES INC | J5D005C-1 | SHEET A27 OF 86

PRINTED IN U.S.A.

TABLE A-FEATURES(CONTINUED)

EQUIPMENT				EQUIPMENT OR CIRCUIT DATA					SD EQUIVALENT		
DESCRIPTION	REF NOTE	RAT-ING	LIST OR GROUP	QTY	EQUIPMENT OR CIRCUIT	L/G OR FIG	WRG	APP	SCHEMATIC	FIG	OPT
600 FOOT CABLE INSTALLATION KIT REQUIRED IN ADDITION TO 17A ANNOUNCEMENT SYSTEM LIST 96 TO PROVIDE CABLING TO THE MAIN DISTRIBUTION FRAME (MDF) AND THE DIGITAL CROSS CONNECT (DSX). REPL:NONE	500		GX	1	J1C275A-1	22					
300 FOOT CABLE INSTALLATION KIT REQUIRED IN ADDITION TO 17A ANNOUNCEMENT SYSTEM LIST 96 TO PROVIDE CABLING TO THE MAIN DISTRIBUTION FRAME (MDF) AND THE DIGITAL CROSS CONNECT (DSX). REPL:NONE DA EFF:02/29/00 FE/RA:NONE	500	DA	GY	1	J1C275A-1	21					
REMOTE RECORD CONCENTRATOR (RRC) REQUIRED IN ADDITION TO 15A OR 16A ANNOUNCEMENT SYSTEM LISTS 56,78,93, OR 94 TO PROVIDE FOR THE REDUCTION OF POTS LINES (8 TO 1) IN REMOTE ADMINISTRATIVE APPLICATIONS. THIS LIST CONSISTS OF ONE SHELF, ONE INSTALLED CIRCUIT MODULE (BLD30), AND INSTALLATION HARDWARE. REPL:NONE	186 500		GZ	1 1 1	J1C273A-1 ED5D505-10 ED5D088-12	30 88 283					
FINAL ASSEMBLY KIT REQUIRED IN ADDITION TO LIST 60C TO PROVIDE 19",21", OR 23" EQUIPMENT MOUNTING FOR INTERNATIONAL APPLICATIONS. REPL:NONE	500		HA								
FINAL ASSEMBLY KIT REQUIRED IN ADDITION TO LIST 60C TO PROVIDE CONNECTOR PLATE TO MOUNT 22 SUB-D CONNECTORS FOR INTERNATIONAL APPLICATIONS. REPL:NONE	500		HB								
FINAL ASSEMBLY KIT REQUIRED IN ADDITION TO LIST 60C TO PROVIDE CONNECTOR PLATE TO MOUNT 40 RJ-45 CONNECTORS FOR INTERNATIONAL APPLICATIONS. REPL:NONE	500		HC								
FINAL ASSEMBLY KIT REQUIRED IN ADDITION TO LIST 60C TO PROVIDE CONNECTOR PLATE TO MOUNT 16 SUB-D AND 10 RJ45 CONNECTORS FOR INTERNATIONAL APPLICATIONS. REPL:NONE	500		HD								
EQUIPMENT REQUIRED IN ADDITION TO LIST 60C TO PROVIDE MFFU FUSE DESIGNATION LABELS FOR THE NAR APPLICATION OF THE "7 R/E NOW" FIXED CONFIGURATION FEATURE OF THE 5ESS MISCELLAEOUS CABINET. REPL:NONE	191		HE	1 1 1	ED5D088-12 ED5D088-12 ED5D088-12	351A 351B 351C					
WIRING REQUIRED IN ADDITION TO LIST 16 WHEN THE REMOTE ALARM RELAY UNIT CO-EXISTS WITH THE OFFICE ALARM UNIT IN THE SAME CABINET.		DA	WA	1	SD5D130-01	17	S				

END OF TABLE-A

COPYRIGHT @ 2001 LUCENT TECHNOLOGIES
ALL RIGHTS RESERVED

BT13

5ESS SWITCHING EQUIPMENT
SPECIFICATION FOR
MISCELLANEOUS CABINET

DWG SIZE C2 | ISSUE 117

LUCENT TECHNOLOGIES INC | J5D005C-1 | SHEET A28 OF 86

PRINTED IN U.S.A.

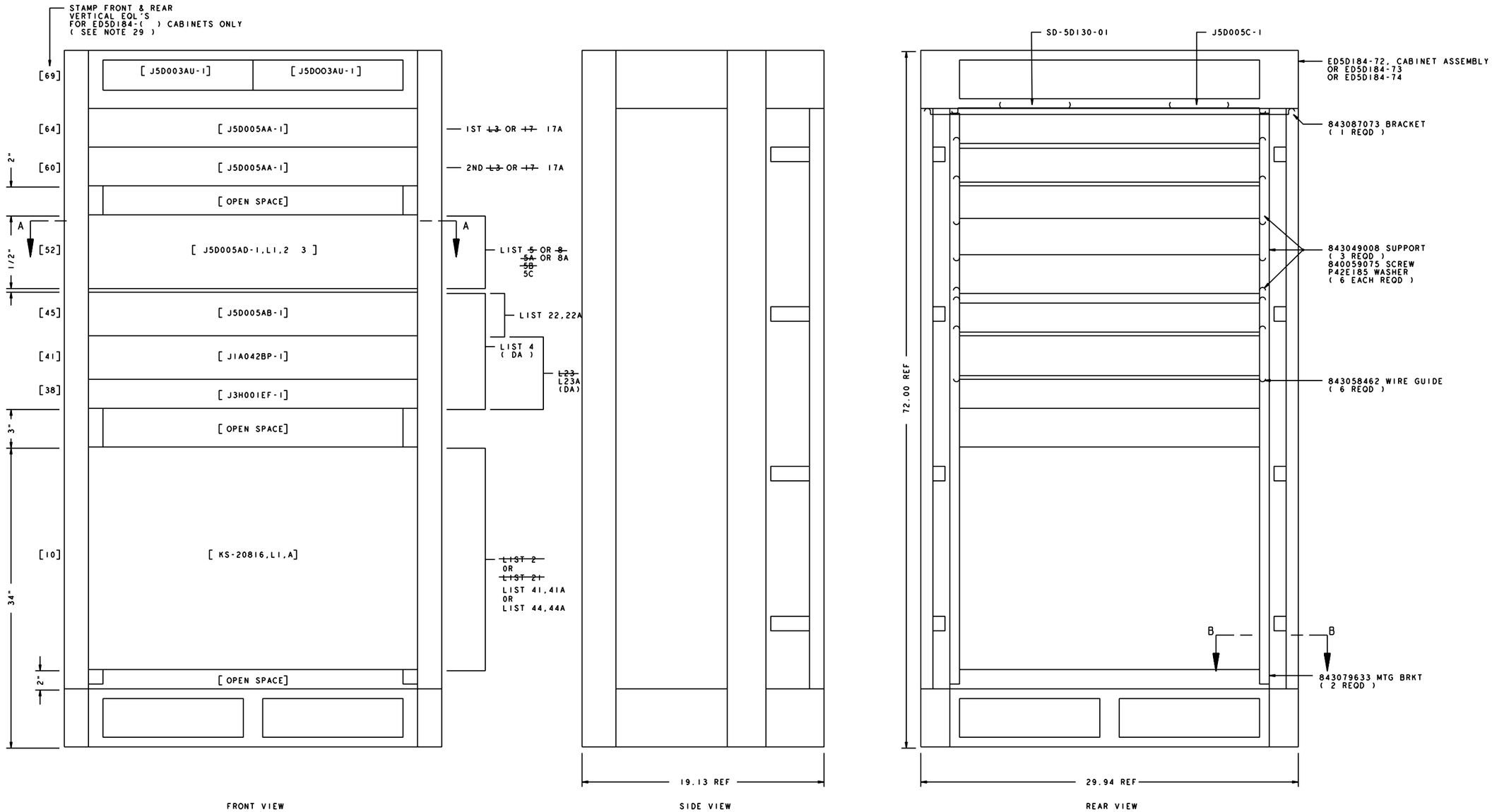

FIG. 1 (DA)
SHOWN WITHOUT DOORS AND
SIDE PANELS

TITLE
5ESS MISCELLANEOUS CABINET

THIRD ANGLE PROJECTION

LUCENT TECHNOLOGIES - PROPRIETARY
THIS DOCUMENT CONTAINS PROPRIETARY INFORMATION OF
LUCENT TECHNOLOGIES AND IS NOT TO BE DISCLOSED OR USED
EXCEPT IN ACCORDANCE WITH APPLICABLE AGREEMENTS

COPYRIGHT© 2000 LUCENT TECHNOLOGIES
UNPUBLISHED & NOT FOR PUBLICATION
ALL RIGHTS RESERVED

		SHEET	ISSUE	DWG SIZE
LUCENT TECHNOLOGIES	J5D005C-1	B1	113	C2/AIR

J5D005C-1

LU.EQPT.ISSUE-GEN.FRM NOV 1999

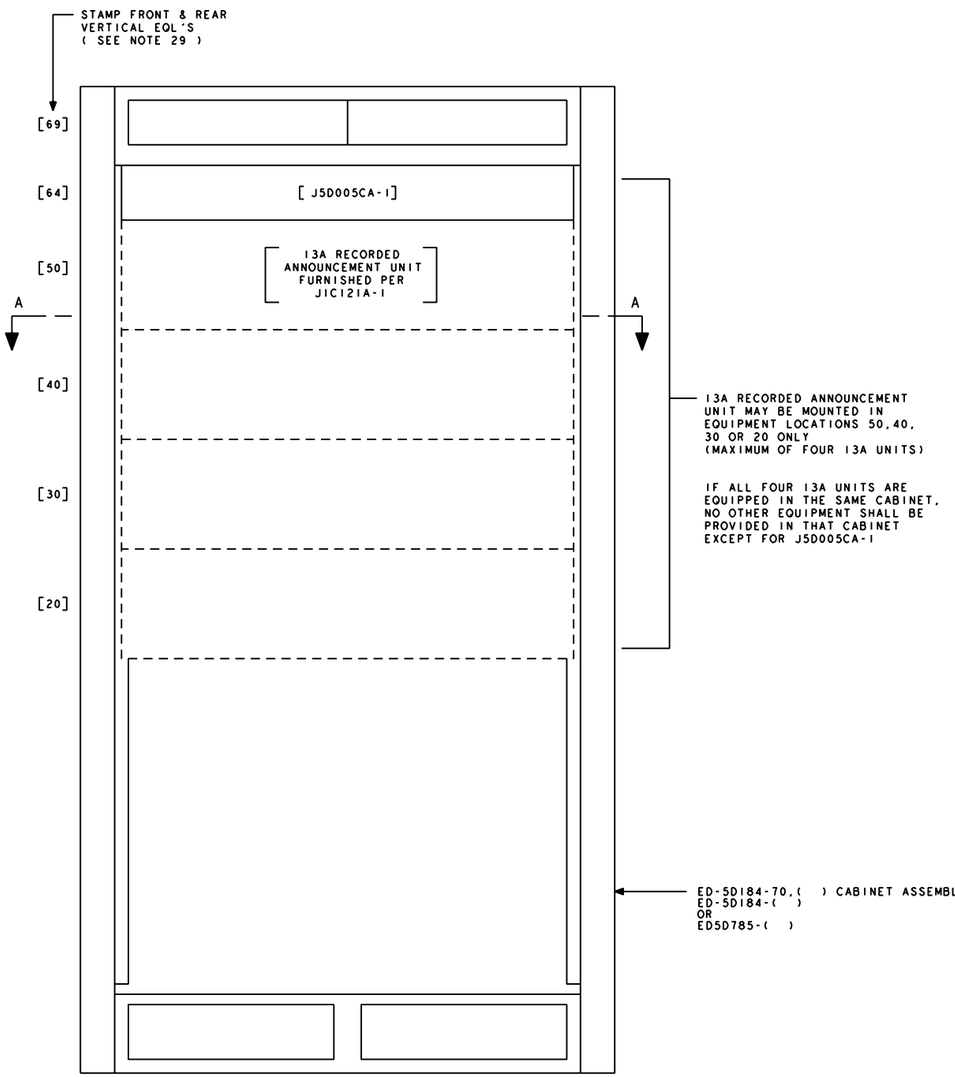

FRONT VIEW

FIG. 2 (DA)
SHOWN WITHOUT DOORS OR SIDE PANELS

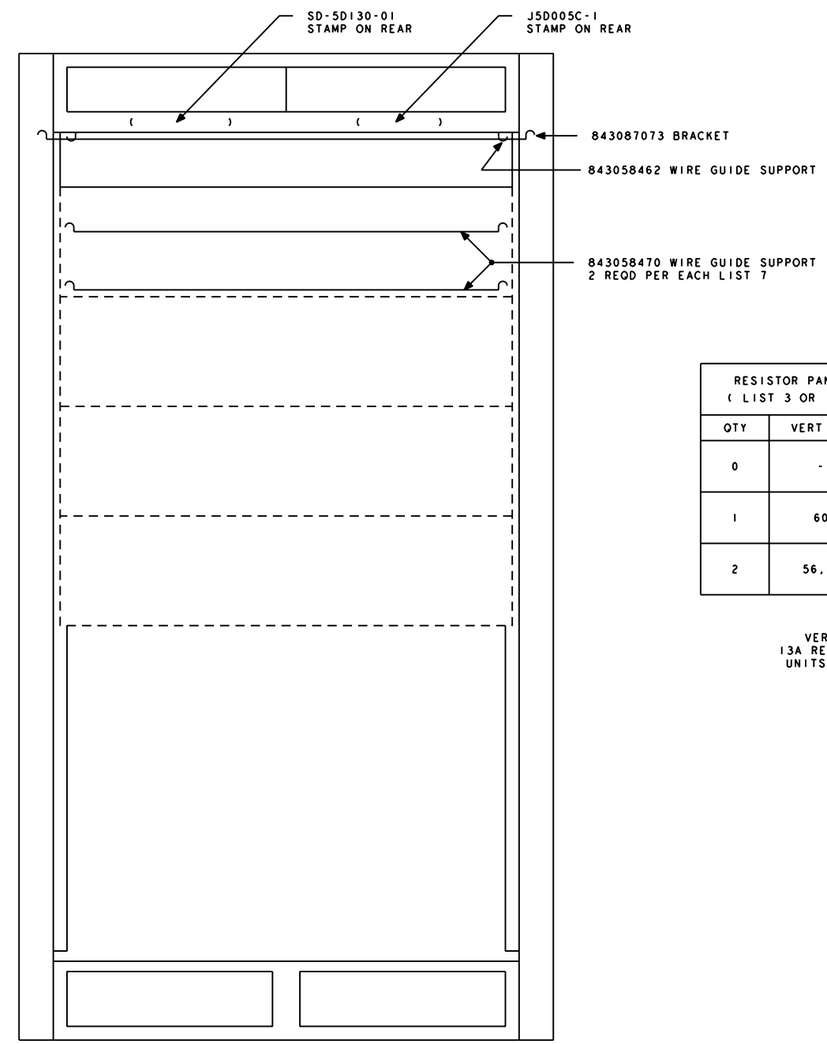

REAR VIEW

FIG. 2 (DA)
SHOWN WITHOUT DOORS OR SIDE PANELS

RESISTOR PANEL (LIST 3 OR 17)		13A RA UNIT (LIST 7)	
QTY	VERT EQL	QTY	VERT EQL
0	-	4	20,30 40,50
1	60	3	20,30 40
2	56,60	2	20,30

TABLE AA
VERTICAL EQL'S FOR
13A RECORDED ANNOUNCEMENT
UNITS & RESISTOR PANELS

TITLE
5ESS MISCELLANEOUS CABINET

THIRD ANGLE PROJECTION

LUCENT TECHNOLOGIES - PROPRIETARY
THIS DOCUMENT CONTAINS PROPRIETARY INFORMATION OF
LUCENT TECHNOLOGIES AND IS NOT TO BE DISCLOSED OR USED
EXCEPT IN ACCORDANCE WITH APPLICABLE AGREEMENTS

COPYRIGHT© 2000 LUCENT TECHNOLOGIES
UNPUBLISHED & NOT FOR PUBLICATION
ALL RIGHTS RESERVED

LUCENT TECHNOLOGIES	J5D005C-1	SHEET	ISSUE	DWG SIZE
		B2	113	C2/AIR

J5D005C-1

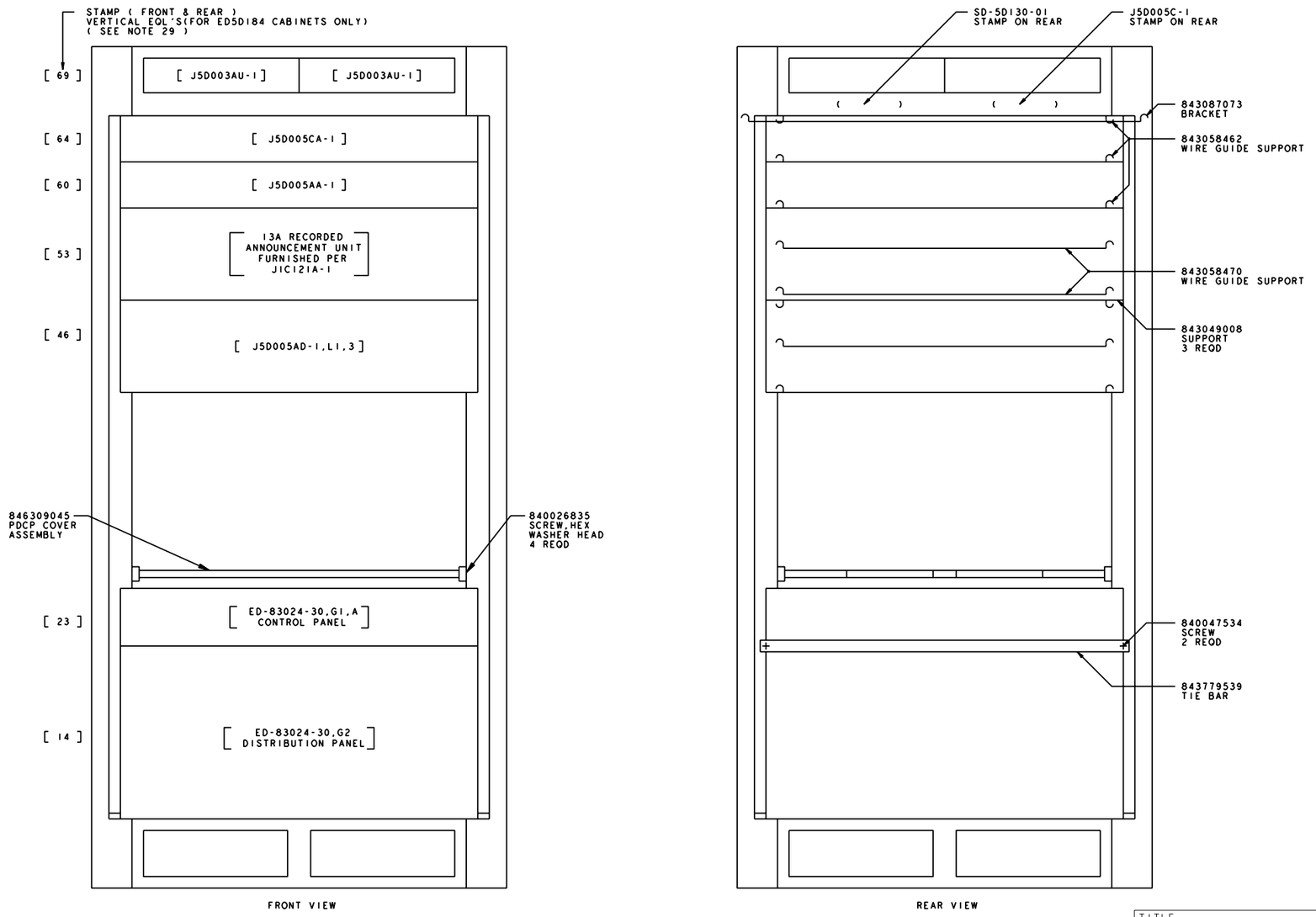

FIG. 3 (DA)
SHOWN WITHOUT DOORS OR SIDE PANELS

TITLE
5ESS MISCELLANEOUS CABINET

THIRD ANGLE PROJECTION

LUCENT TECHNOLOGIES - PROPRIETARY
THIS DOCUMENT CONTAINS PROPRIETARY INFORMATION OF
LUCENT TECHNOLOGIES AND IS NOT TO BE DISCLOSED OR USED
EXCEPT IN ACCORDANCE WITH APPLICABLE AGREEMENTS

COPYRIGHT© 2000 LUCENT TECHNOLOGIES
UNPUBLISHED & NOT FOR PUBLICATION
ALL RIGHTS RESERVED

LUCENT TECHNOLOGIES	J5D005C-1	SHEET	ISSUE	DWG SIZE
		B3	113	C2/AIR

J5D005C-1

LU.EQPT.ISSUE-GEN.FRM NOV 1999

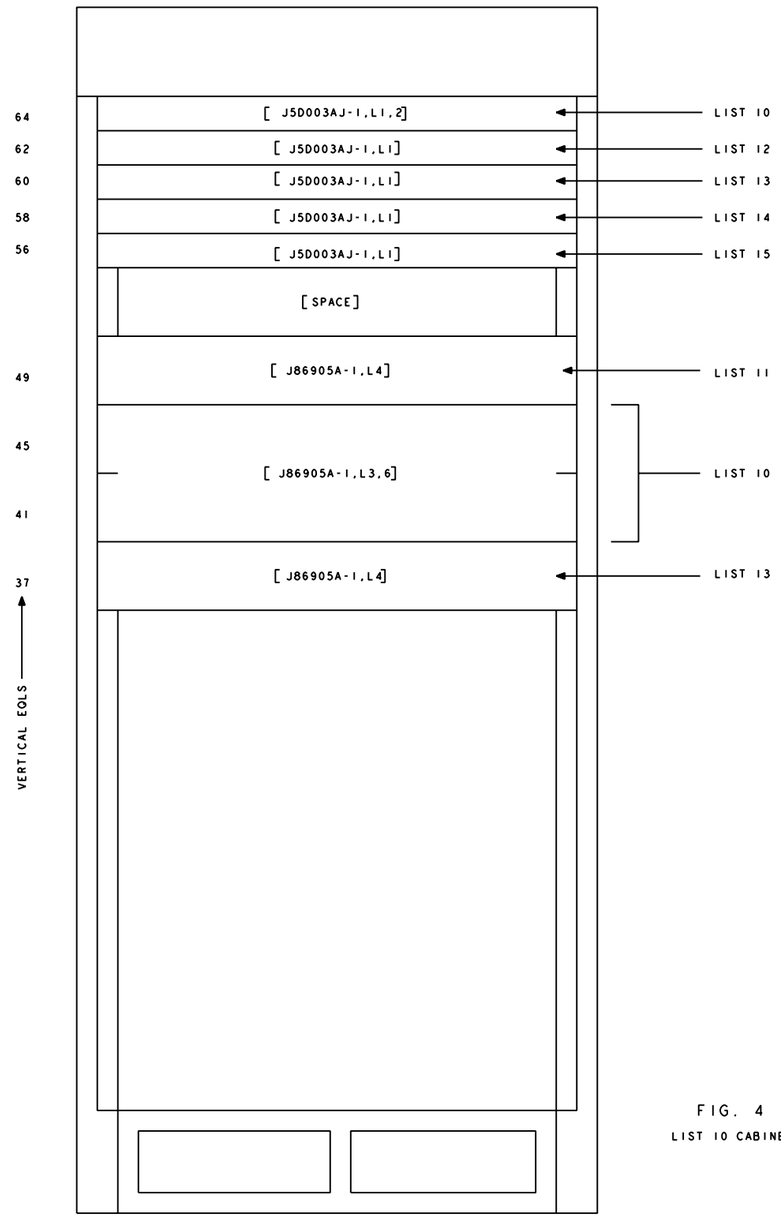

FIG. 4 (DA)

LIST 10 CABINET

TITLE 5ESS MISCELLANEOUS CABINET				
THIRD ANGLE PROJECTION	LUCENT TECHNOLOGIES - PROPRIETARY THIS DOCUMENT CONTAINS PROPRIETARY INFORMATION OF LUCENT TECHNOLOGIES AND IS NOT TO BE DISCLOSED OR USED EXCEPT IN ACCORDANCE WITH APPLICABLE AGREEMENTS COPYRIGHT© 2000 LUCENT TECHNOLOGIES UNPUBLISHED & NOT FOR PUBLICATION ALL RIGHTS RESERVED			
LUCENT TECHNOLOGIES	J5D005C-1	SHEET B4	ISSUE 113	DWG SIZE C2/AIR

J5D005C-1

LU.EQPT.ISSUE-GEN.FRM NOV 1999

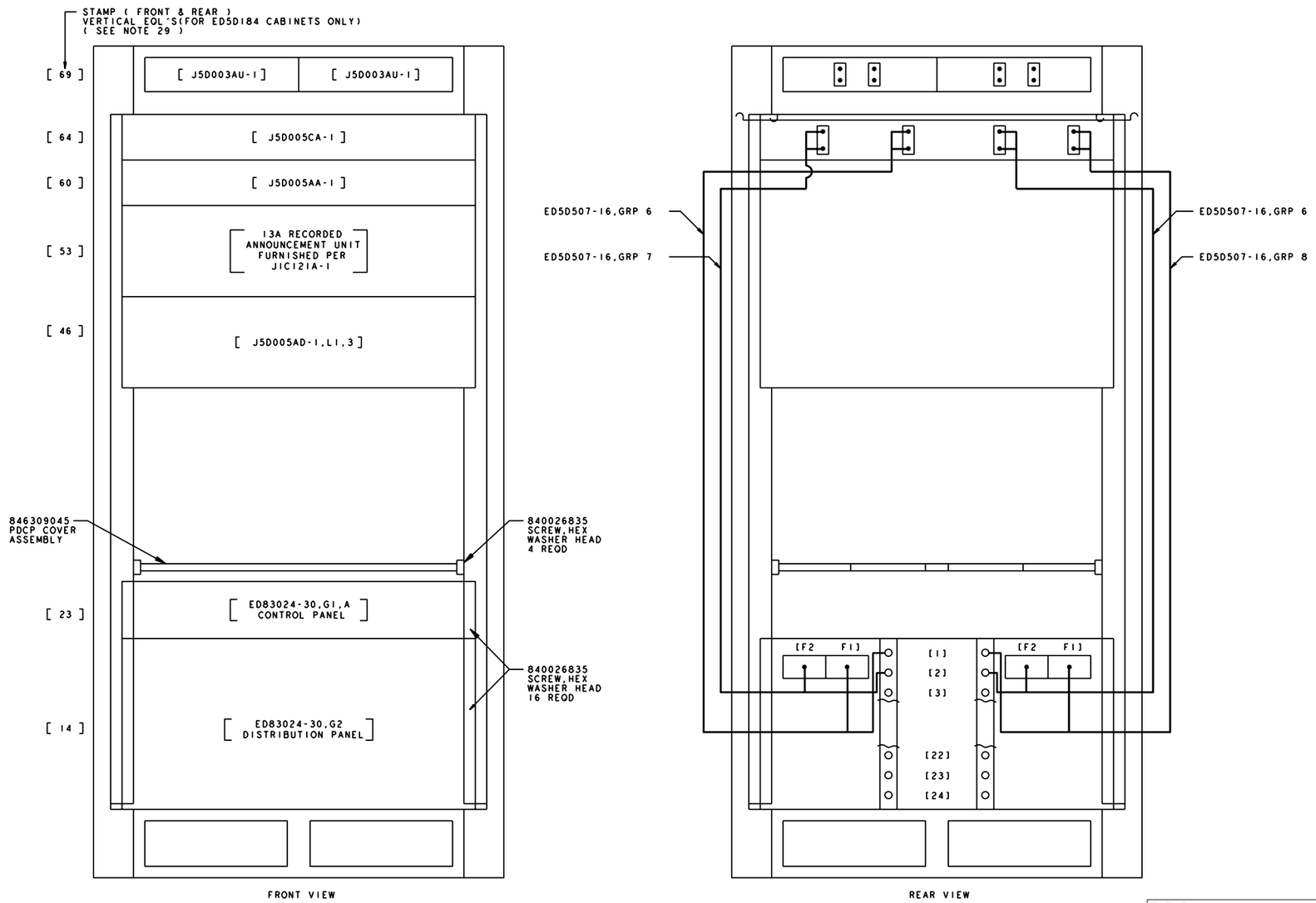

FIG. 5 (DA)
SHOWN WITHOUT DOORS OR SIDE PANELS
LIST AJ
CABLE ASSEMBLIES

TITLE
5ESS MISCELLANEOUS CABINET

THIRD ANGLE PROJECTION

LUCENT TECHNOLOGIES - PROPRIETARY
THIS DOCUMENT CONTAINS PROPRIETARY INFORMATION OF
LUCENT TECHNOLOGIES AND IS NOT TO BE DISCLOSED OR USED
EXCEPT IN ACCORDANCE WITH APPLICABLE AGREEMENTS

COPYRIGHT© 2000 LUCENT TECHNOLOGIES
UNPUBLISHED & NOT FOR PUBLICATION
ALL RIGHTS RESERVED

LUCENT TECHNOLOGIES	J5D005C-1	SHEET	ISSUE	DWG SIZE
		B5	113	C2/AIR

J5D005C-1

LU.EQPT.ISSUE-GEN.FRM NOV 1999

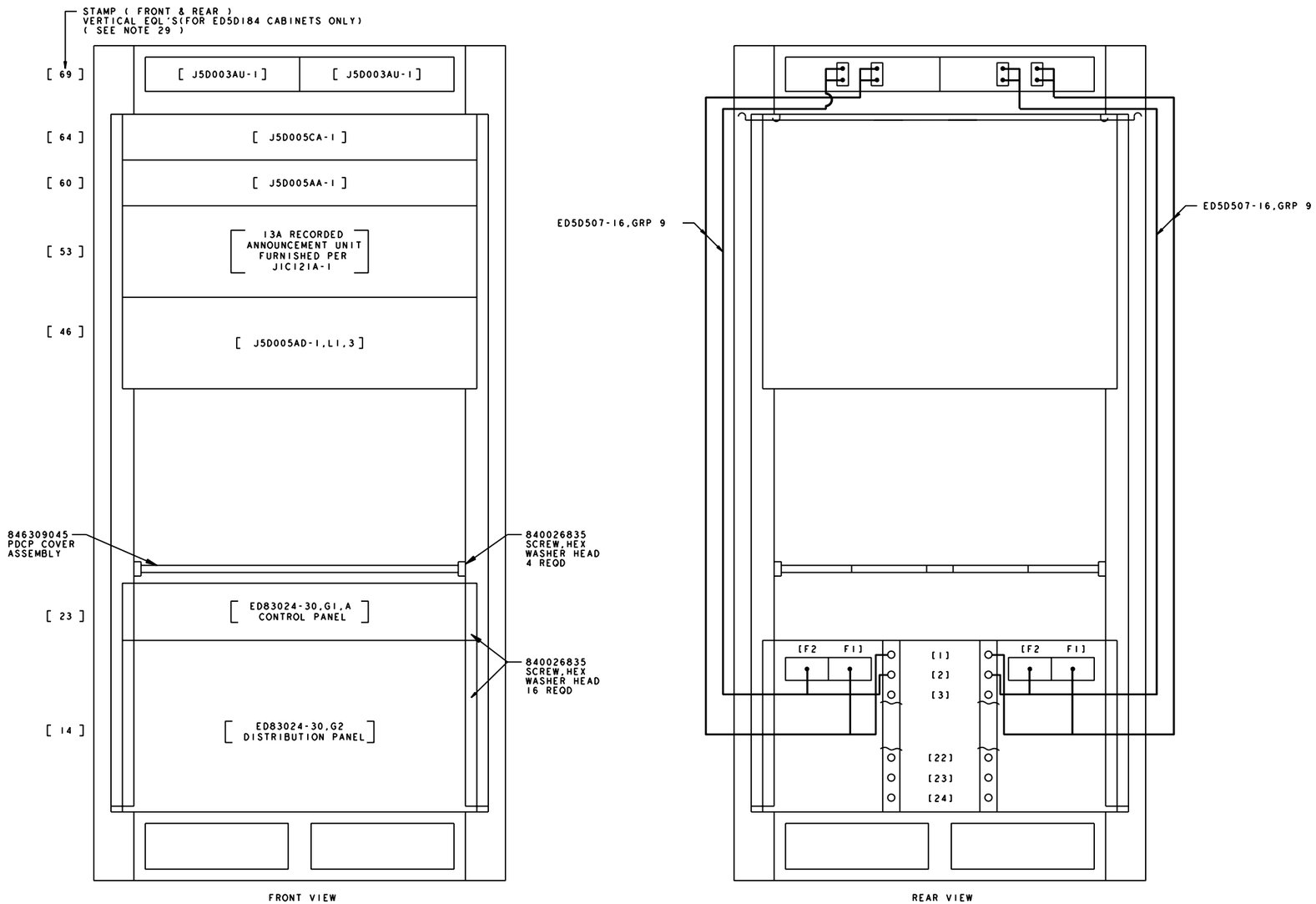

FIG. 6 (DA)
SHOWN WITHOUT DOORS OR SIDE PANELS
LIST AK
CABLE ASSEMBLIES
SHOWN IN 5ESS SWITCH CABINET
EQUIPMENT ARRANGEMENT TYPICAL

TITLE
5ESS MISCELLANEOUS CABINET

THIRD ANGLE PROJECTION

LUCENT TECHNOLOGIES - PROPRIETARY
THIS DOCUMENT CONTAINS PROPRIETARY INFORMATION OF
LUCENT TECHNOLOGIES AND IS NOT TO BE DISCLOSED OR USED
EXCEPT IN ACCORDANCE WITH APPLICABLE AGREEMENTS

COPYRIGHT© 2000 LUCENT TECHNOLOGIES
UNPUBLISHED & NOT FOR PUBLICATION
ALL RIGHTS RESERVED

LUCENT TECHNOLOGIES	J5D005C-1	SHEET	ISSUE	DWG SIZE
		B6	113	C2/AIR

J5D005C-1

LU.EQPT.ISSUE-GEN.FRM NOV 1999

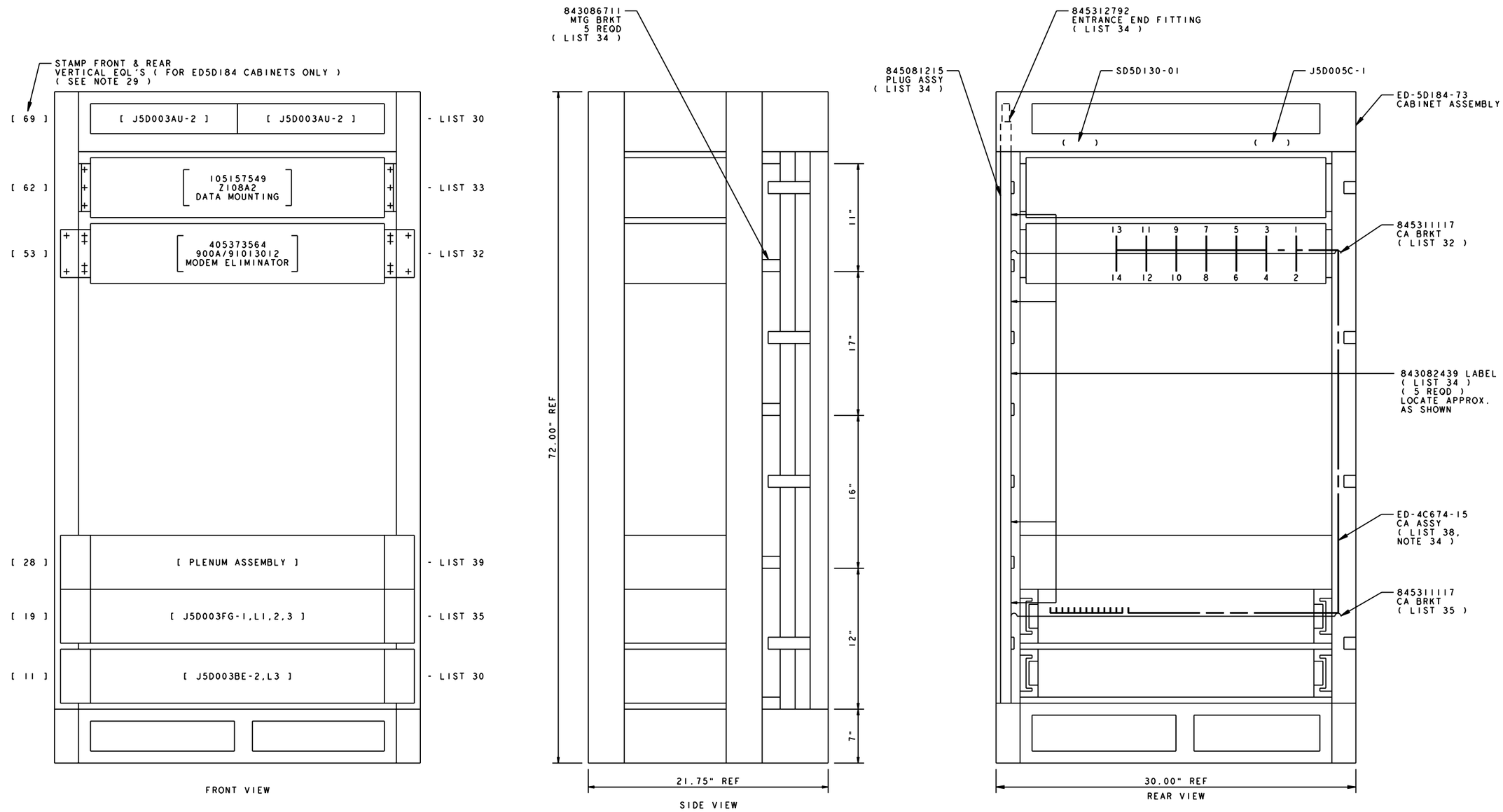

FIG. 7 " DA "
SHOWN WITHOUT DOOR AND SIDE PANELS
(API APPLICATION ONLY)

TITLE
5ESS MISCELLANEOUS CABINT

THIRD ANGLE PROJECTION

LUCENT TECHNOLOGIES - PROPRIETARY
THIS DOCUMENT CONTAINS PROPRIETARY INFORMATION OF
LUCENT TECHNOLOGIES AND IS NOT TO BE DISCLOSED OR USED
EXCEPT IN ACCORDANCE WITH APPLICABLE AGREEMENTS

COPYRIGHT© 2000 LUCENT TECHNOLOGIES
UNPUBLISHED & NOT FOR PUBLICATION
ALL RIGHTS RESERVED

LUCENT TECHNOLOGIES	J5D005C-1	SHEET	ISSUE	DWG SIZE
		B7	113	C2/AIR

J5D005C-1

LU.EQPT.ISSUE-GEN.FRM NOV 1999

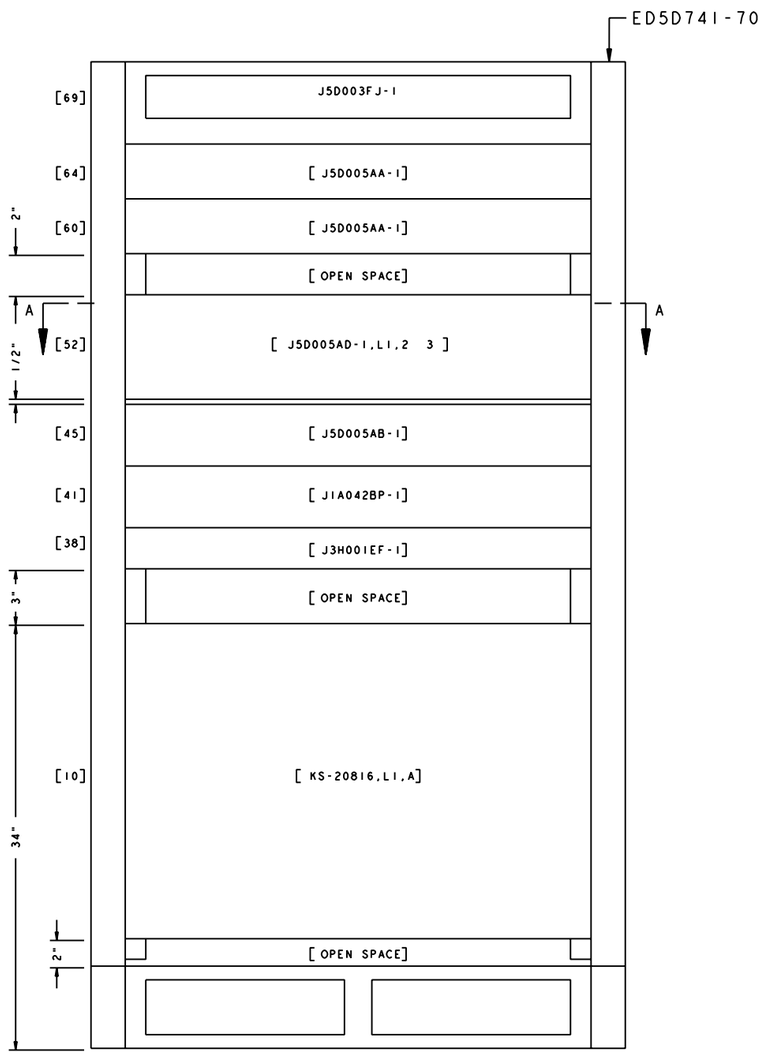

FRONT VIEW

TYPICAL FIG. 8 (DA)

TITLE 5ESS MISCELLANEOUS CABINET				
THIRD ANGLE PROJECTION	LUCENT TECHNOLOGIES - PROPRIETARY THIS DOCUMENT CONTAINS PROPRIETARY INFORMATION OF LUCENT TECHNOLOGIES AND IS NOT TO BE DISCLOSED OR USED EXCEPT IN ACCORDANCE WITH APPLICABLE AGREEMENTS COPYRIGHT© 2000 LUCENT TECHNOLOGIES UNPUBLISHED & NOT FOR PUBLICATION ALL RIGHTS RESERVED			
LUCENT TECHNOLOGIES	J5D005C-1	SHEET B8	ISSUE 113	DWG SIZE C2/AIR

J5D005C-1

LU.EQPT.ISSUE-GEN.FRM NOV 1999

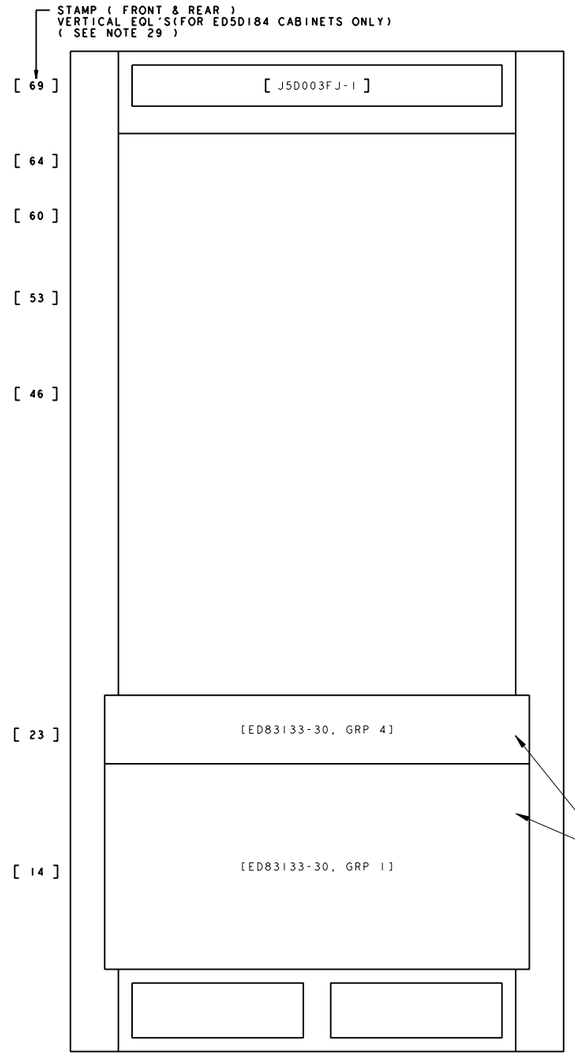

FRONT VIEW

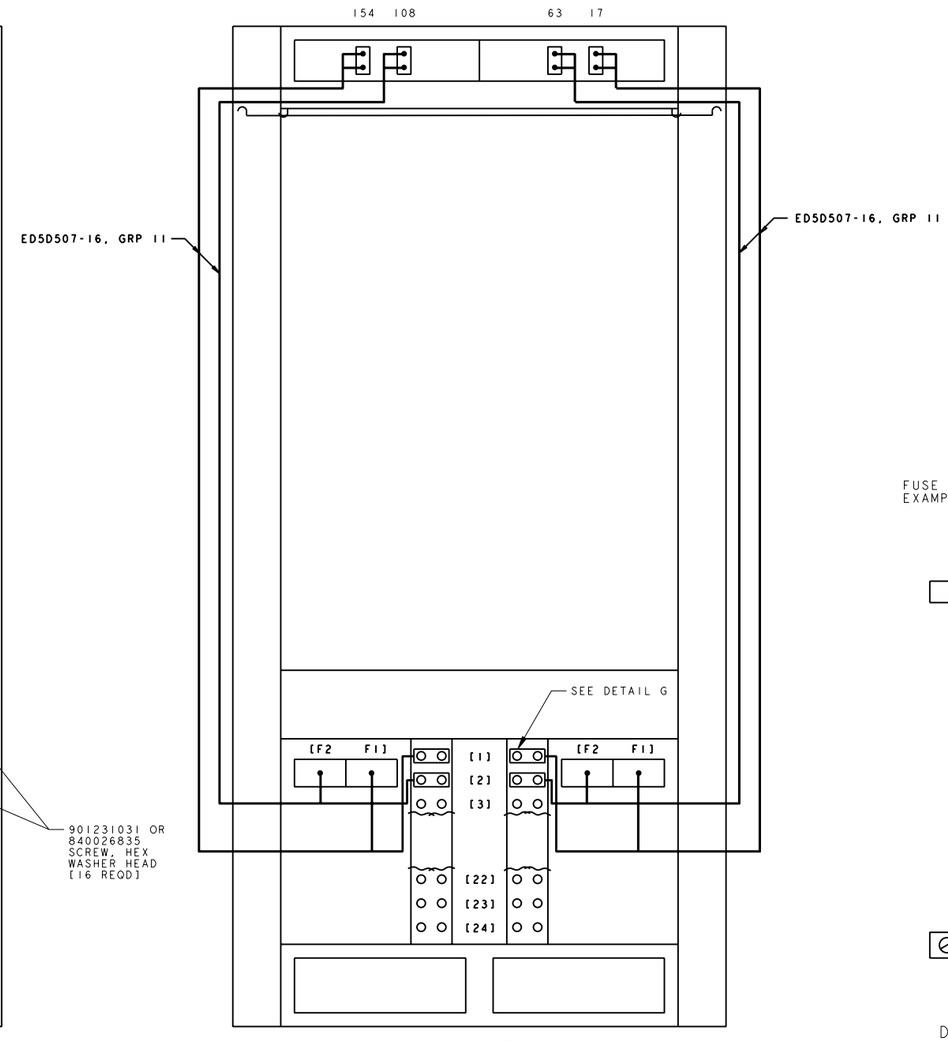

REAR VIEW

FIG. 9

LIST 20C
CABLE ASSEMBLIES
SHOWN IN 5ESS CABINET
EQUIPMENT ARRANGEMENT TYPICAL

A-BUS
FUSE ASSIGNMENTS

NO.	AMP	EQUIPMENT
F1	25	CSPC A0 017
F2	25	CSPC A1 032
F3	25	
F4	25	
F5	25	
F6	25	
F7	25	
F8	25	
F9	25	SM01 LTP0 A0 017
F10	25	SM01 LTP0 A1 063
F11	25	
F12	25	
F13	25	
F14	25	
F15	25	
F16	25	
F17	25	CM2 B5 A0 017
F18	25	CM2 B5 A1 047
F19	25	
F20	25	
F21	25	
F22	25	
F23	25	
F24	25	

MFFU EQL IDENTIFICATION
-48V FEEDER IDENTIFICATION (i.e. A0 ...)
CABINET IDENTIFICATION
FUSE SIZE

DETAIL E

FUSE ASSIGNMENTS LABEL PROVIDED WITH FUSE PANEL ED83133-30
EXAMPLE OF RECOMMENDED LOAD IDENTIFICATION. [SEE NOTE 71]

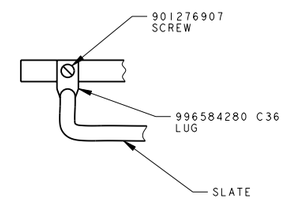

DETAIL F

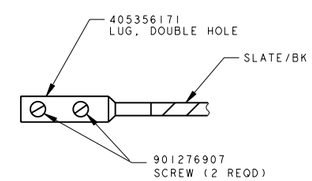

DETAIL G

TITLE
5ESS MISCELLANEOUS CABINT

THIRD ANGLE PROJECTION

LUCENT TECHNOLOGIES - PROPRIETARY
THIS DOCUMENT CONTAINS PROPRIETARY INFORMATION OF
LUCENT TECHNOLOGIES AND IS NOT TO BE DISCLOSED OR USED
EXCEPT IN ACCORDANCE WITH APPLICABLE AGREEMENTS

COPYRIGHT© 2000 LUCENT TECHNOLOGIES
UNPUBLISHED & NOT FOR PUBLICATION
ALL RIGHTS RESERVED

LUCENT TECHNOLOGIES	J5D005C-1	SHEET	ISSUE	DWG SIZE
		B9	113	C2/AIR

J5D005C-1

LU.EQPT.ISSUE-GEN.FRM NOV 1999

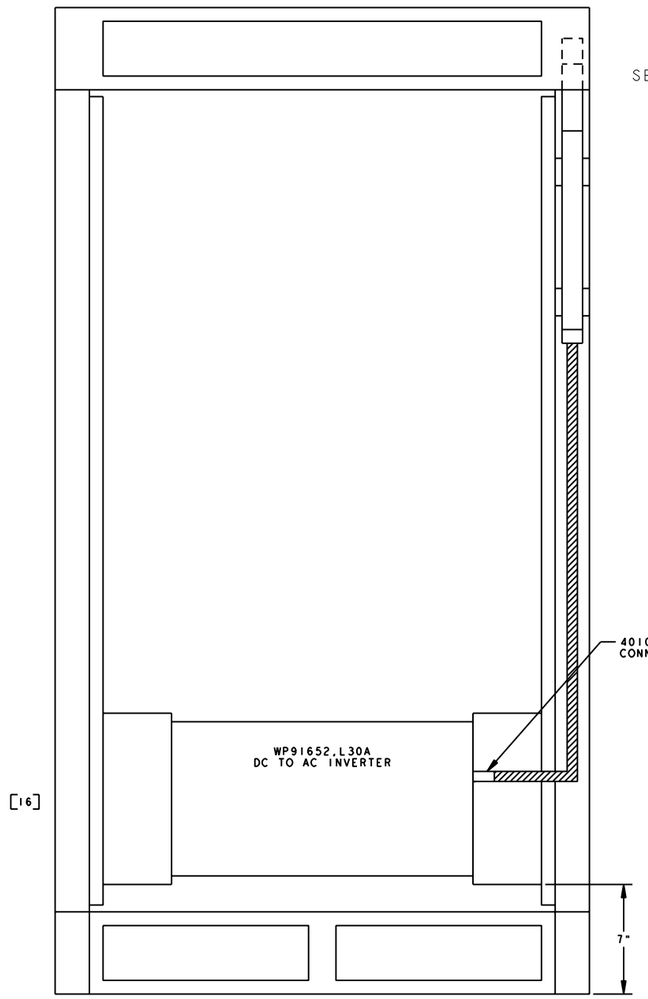

REAR VIEW

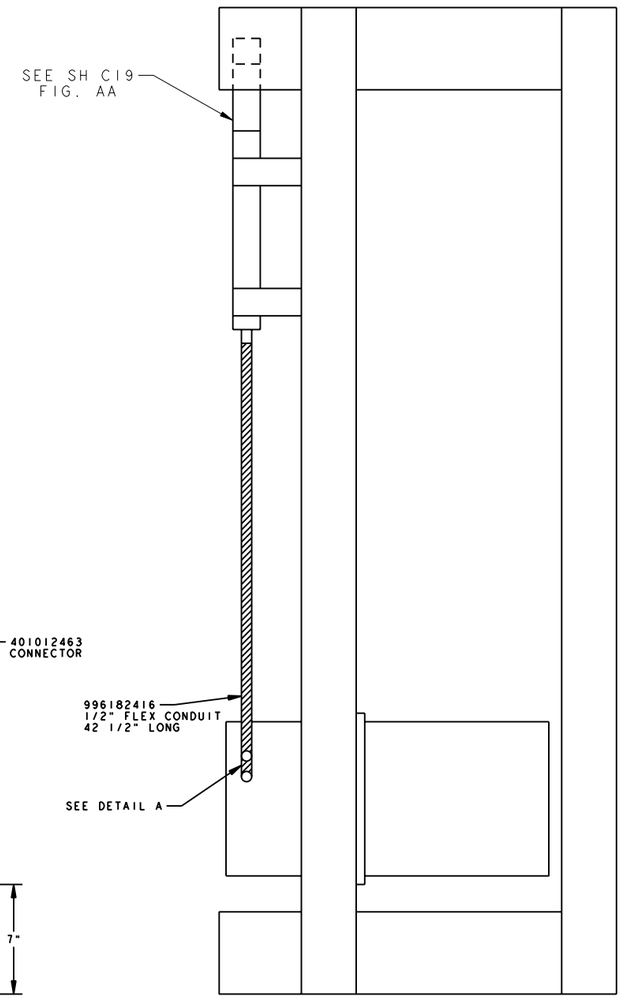

SIDE VIEW

FIG. 10

LIST 79
SHOWN IN 5ESS CABINET
EQUIPMENT ARRANGEMENT TYPICAL

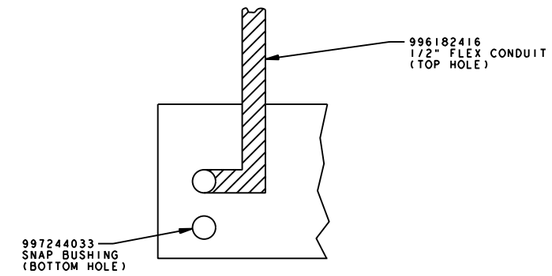

DETAIL H

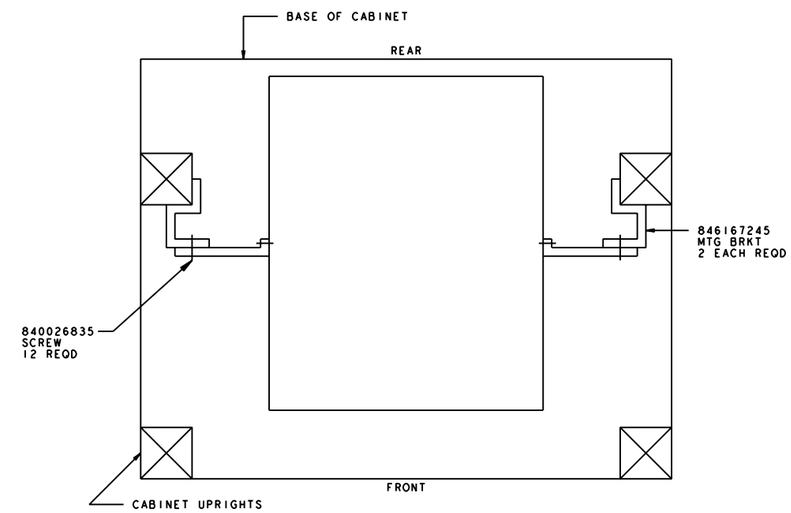

FIG. 11

LOCATION OF MTG BRKTS FOR THE INVERTER

TITLE 5ESS MISCELLANEOUS CABINT				
THIRD ANGLE PROJECTION	LUCENT TECHNOLOGIES - PROPRIETARY THIS DOCUMENT CONTAINS PROPRIETARY INFORMATION OF LUCENT TECHNOLOGIES AND IS NOT TO BE DISCLOSED OR USED EXCEPT IN ACCORDANCE WITH APPLICABLE AGREEMENTS COPYRIGHT© 2000 LUCENT TECHNOLOGIES UNPUBLISHED & NOT FOR PUBLICATION ALL RIGHTS RESERVED			
LUCENT TECHNOLOGIES	J5D005C-1	SHEET B10	ISSUE 113	DWG SIZE C2/AIR

J5D005C-1

LU.EQPT.ISSUE-GEN.FRM NOV 1999

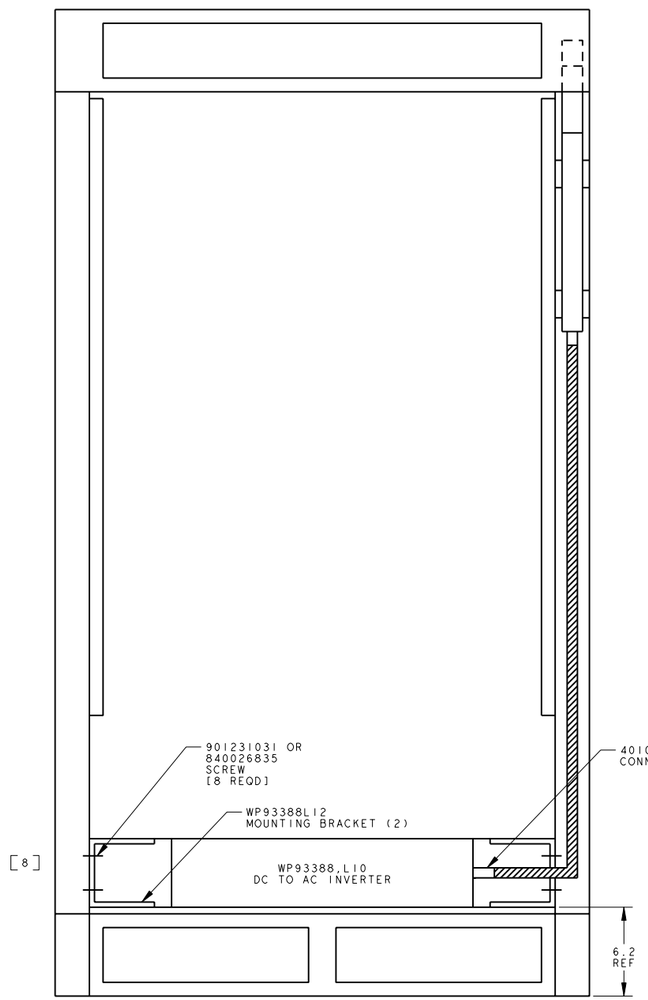

REAR VIEW

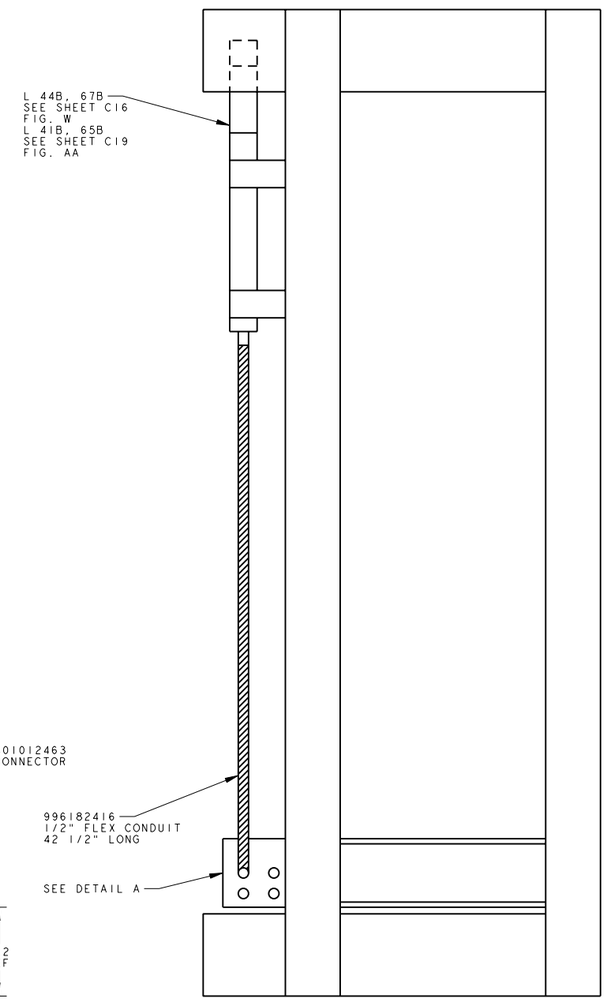

SIDE VIEW

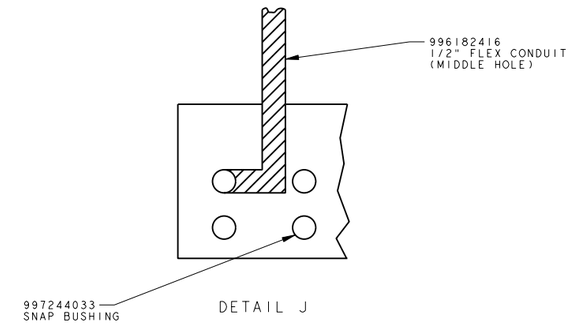

DETAIL J

FIG. 12

LOCATION OF WIREMOLD FOR AC LEADS FROM THE INVERTER
LISTS 41B, 44B, 65B AND 67B

TITLE	5ESS MISCELLANEOUS CABINT (P)
THIRD ANGLE PROJECTION	LUCENT TECHNOLOGIES - PROPRIETARY THIS DOCUMENT CONTAINS PROPRIETARY INFORMATION OF LUCENT TECHNOLOGIES AND IS NOT TO BE DISCLOSED OR USED EXCEPT IN ACCORDANCE WITH APPLICABLE AGREEMENTS COPYRIGHT© 2000 LUCENT TECHNOLOGIES UNPUBLISHED & NOT FOR PUBLICATION ALL RIGHTS RESERVED

LUCENT TECHNOLOGIES	J5D005C-1	SHEET	ISSUE	DWG SIZE
		B11	113	C2/AIR

J5D005C-1

LU.EQPT.ISSUE-GEN.FRM NOV 1999

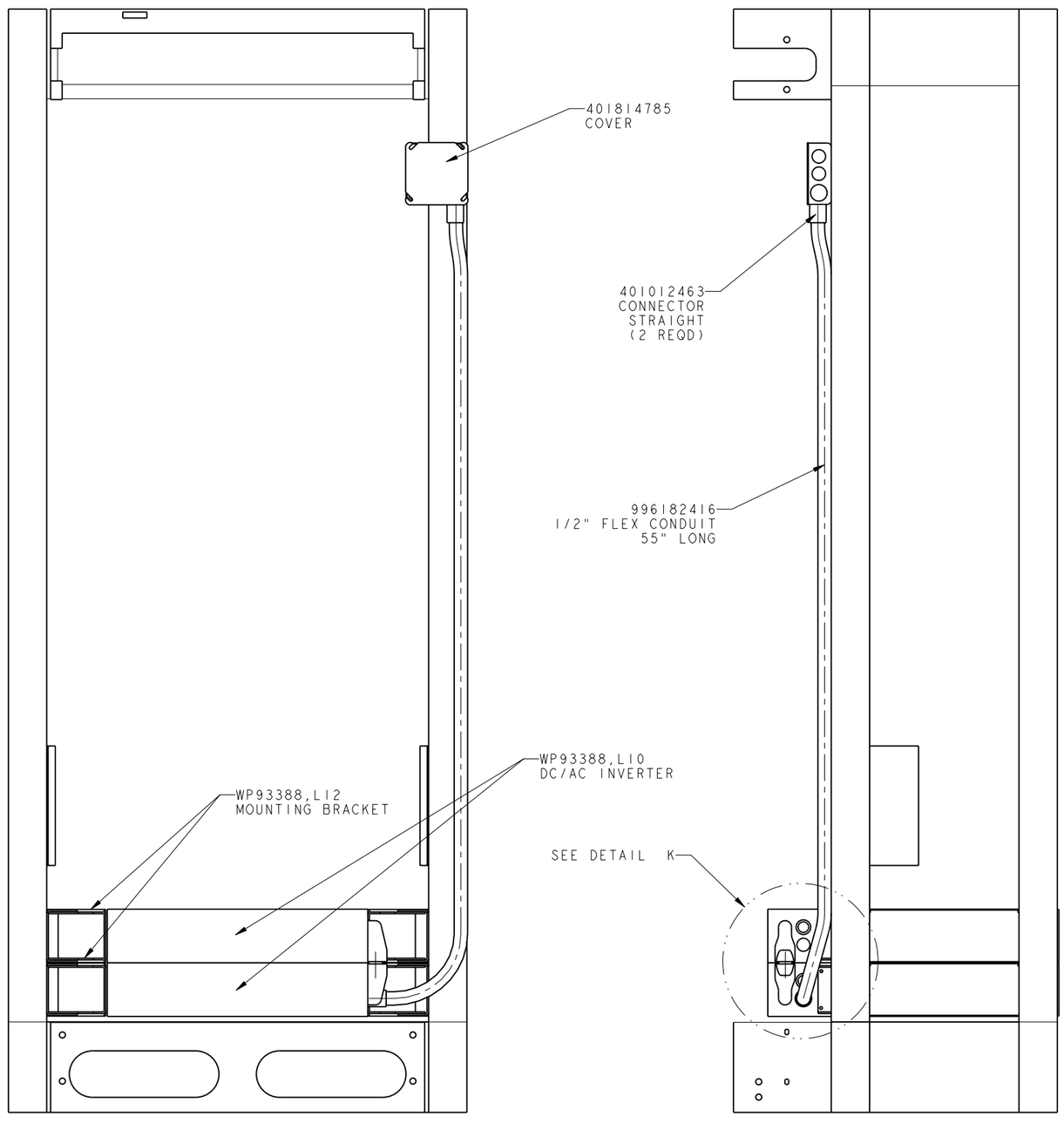

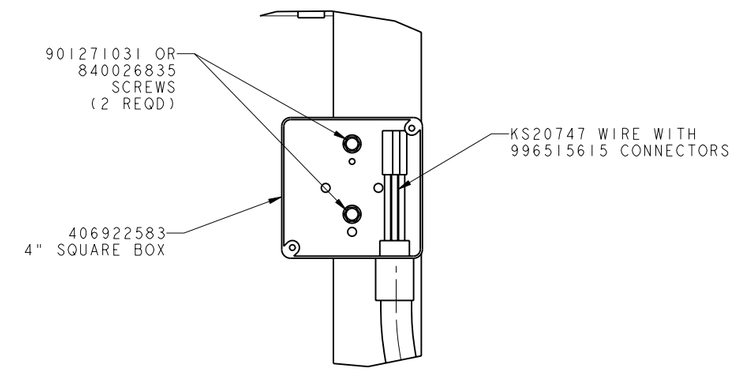

DETAIL L
SHOWN WITH COVER REMOVED
SCALE 1/2

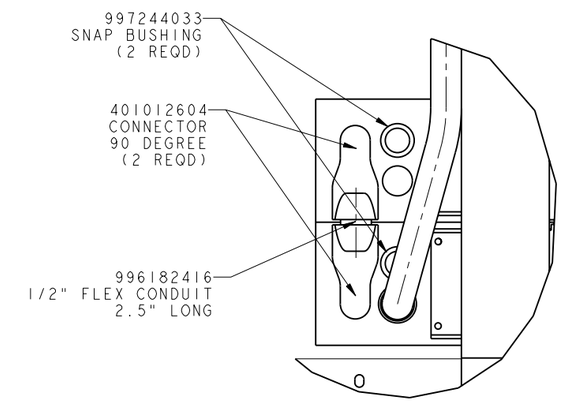

DETAIL K
SCALE 1/2

FIG. 13

MOUNTING LOCATIONS OF INVERTERS AND CONDUIT FOR
AC LEADS
LIST 84

TITLE
5ESS MISCELLANEOUS CABINET

THIRD ANGLE PROJECTION

LUCENT TECHNOLOGIES - PROPRIETARY
THIS DOCUMENT CONTAINS PROPRIETARY INFORMATION OF
LUCENT TECHNOLOGIES AND IS NOT TO BE DISCLOSED OR USED
EXCEPT IN ACCORDANCE WITH APPLICABLE AGREEMENTS

COPYRIGHT© 2000 LUCENT TECHNOLOGIES
UNPUBLISHED & NOT FOR PUBLICATION
ALL RIGHTS RESERVED

LUCENT TECHNOLOGIES	J5D005C-1	SHEET	ISSUE	DWG SIZE
		B12	113	C2/AIR

J5D005C-1

LU.EQPT.ISSUE-GEN.FRM NOV 1999

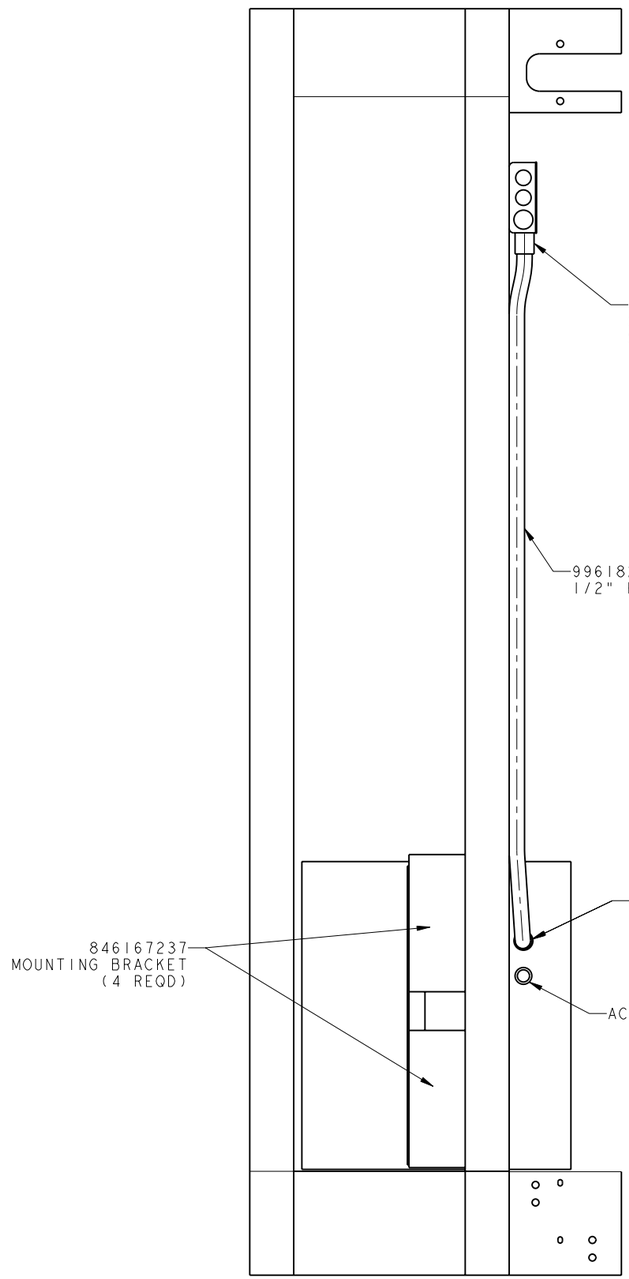

RIGHT SIDE VIEW

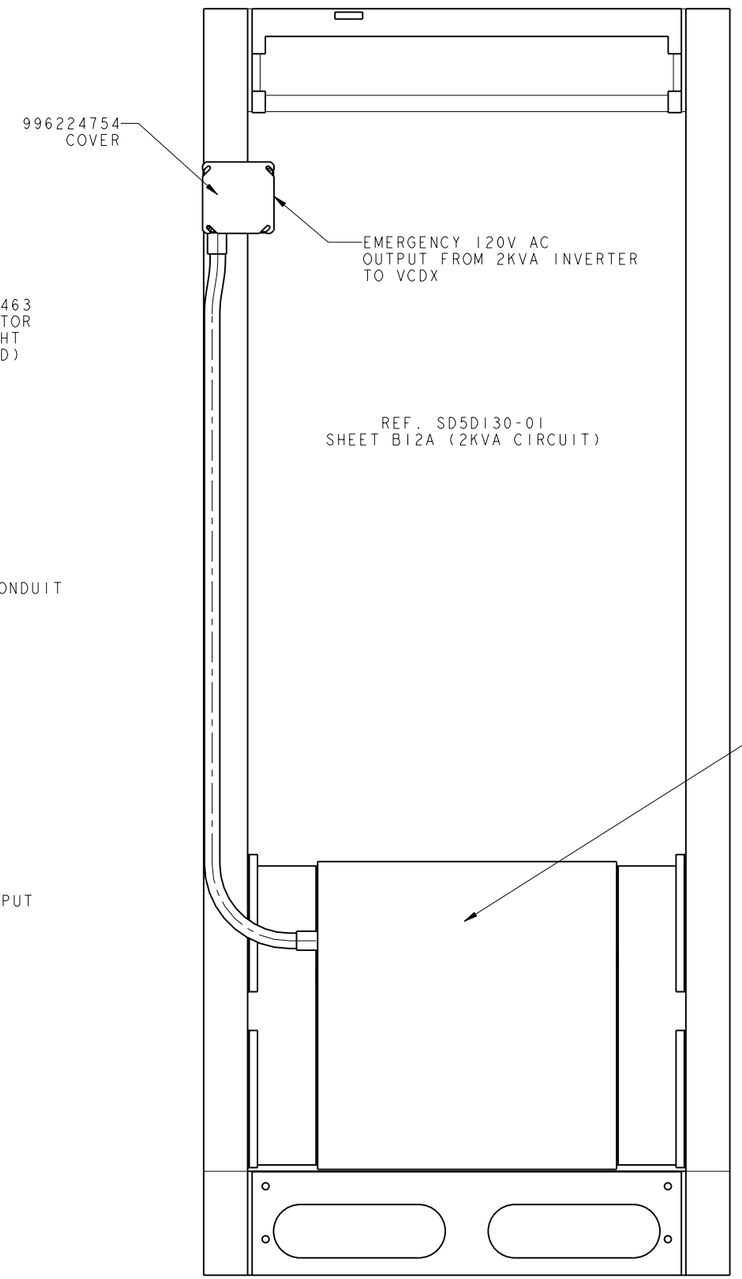

REAR VIEW

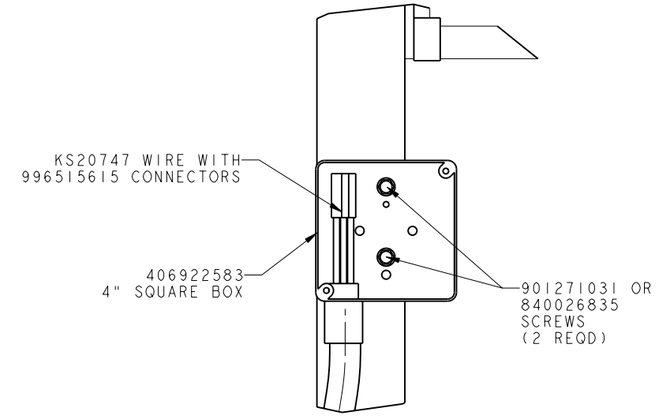

DETAIL N
SHOWN WITH COVER REMOVED
SCALE 1/2

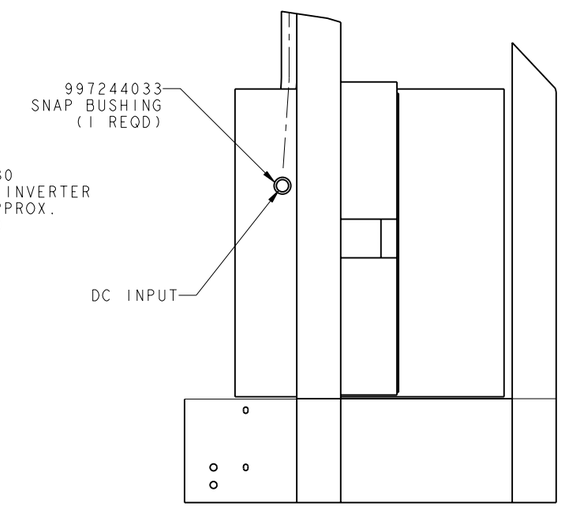

DETAIL P
LEFT SIDE VIEW OF INVERTER
SCALE 1/4

[15]

FIG. 14

MOUNTING LOCATION OF 2KVA INVERTER AND
CONDUIT FOR AC LEADS
LIST 79A

TITLE: 5ESS MISCELLANEOUS CABINET

THIRD ANGLE PROJECTION

LUCENT TECHNOLOGIES - PROPRIETARY
THIS DOCUMENT CONTAINS PROPRIETARY INFORMATION OF
LUCENT TECHNOLOGIES AND IS NOT TO BE DISCLOSED OR USED
EXCEPT IN ACCORDANCE WITH APPLICABLE AGREEMENTS

COPYRIGHT© 2000 LUCENT TECHNOLOGIES
UNPUBLISHED & NOT FOR PUBLICATION
ALL RIGHTS RESERVED

LUCENT TECHNOLOGIES	J5D005C-1	SHEET	ISSUE	DWG SIZE
		B13	113	C2/AIR

J5D005C-1

LU.EQPT.ISSUE-GEN.FRM NOV 1999

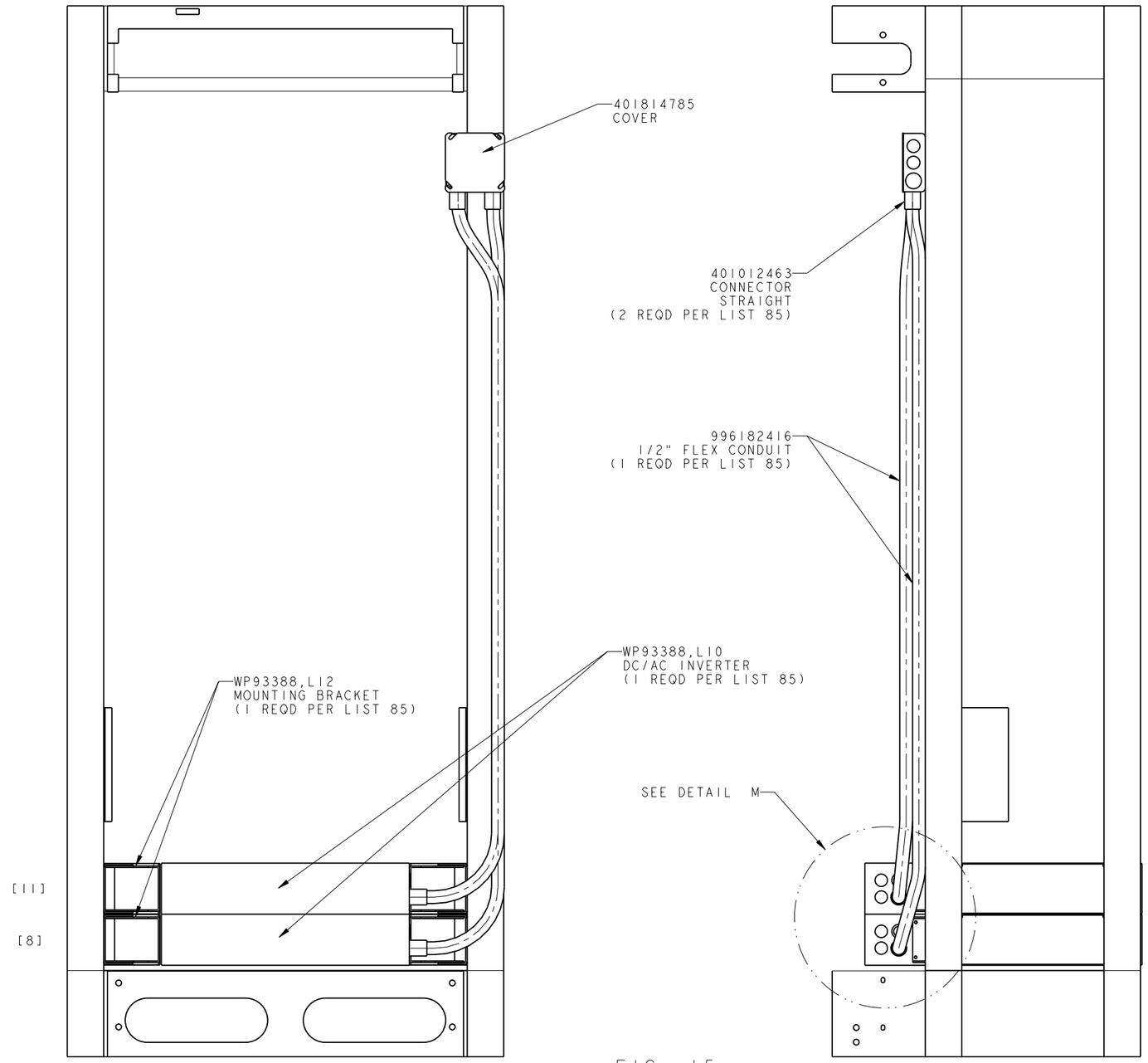

FIG. 15

MOUNTING LOCATIONS OF INVERTERS AND CONDUIT
FOR AC LEADS
LIST 85

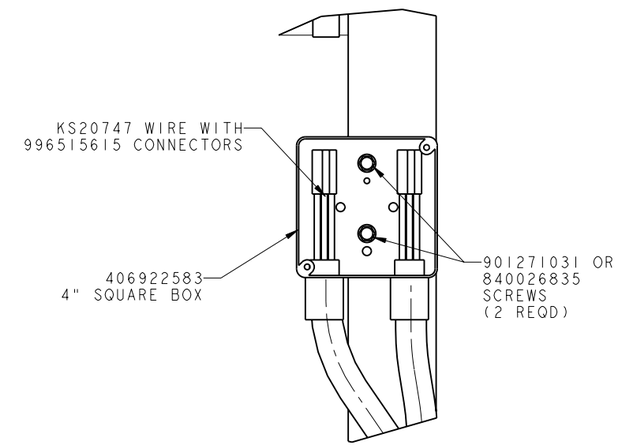

DETAIL O
SHOWN WITH COVER REMOVED
SCALE 1/2

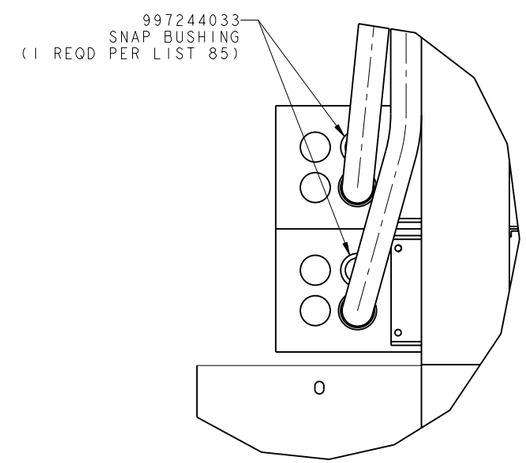

DETAIL M
SCALE 1/2

TITLE
5ESS MISCELLANEOUS CABINET

THIRD ANGLE PROJECTION

LUCENT TECHNOLOGIES - PROPRIETARY
THIS DOCUMENT CONTAINS PROPRIETARY INFORMATION OF
LUCENT TECHNOLOGIES AND IS NOT TO BE DISCLOSED OR USED
EXCEPT IN ACCORDANCE WITH APPLICABLE AGREEMENTS

COPYRIGHT© 2000 LUCENT TECHNOLOGIES
UNPUBLISHED & NOT FOR PUBLICATION
ALL RIGHTS RESERVED

LUCENT TECHNOLOGIES	J5D005C-1	SHEET	ISSUE	DWG SIZE
		B14	113	C2/AIR

J5D005C-1

LU.EQPT.ISSUE-GEN.FRM NOV 1999

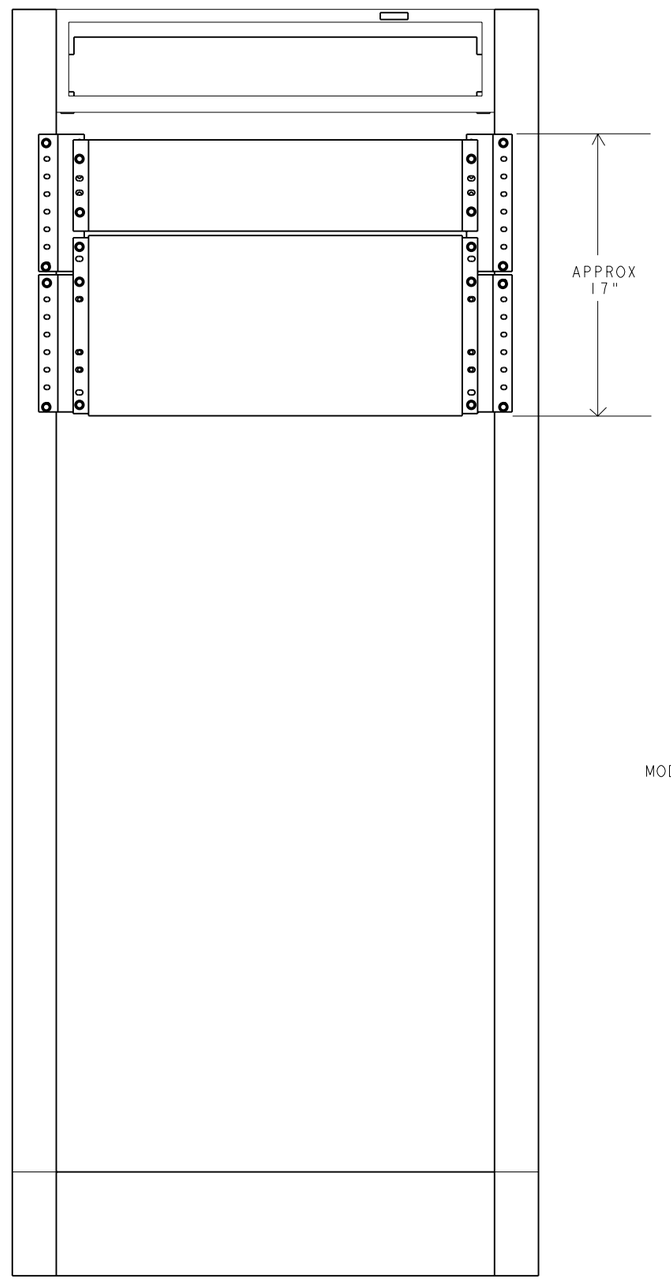

FRONT VIEW

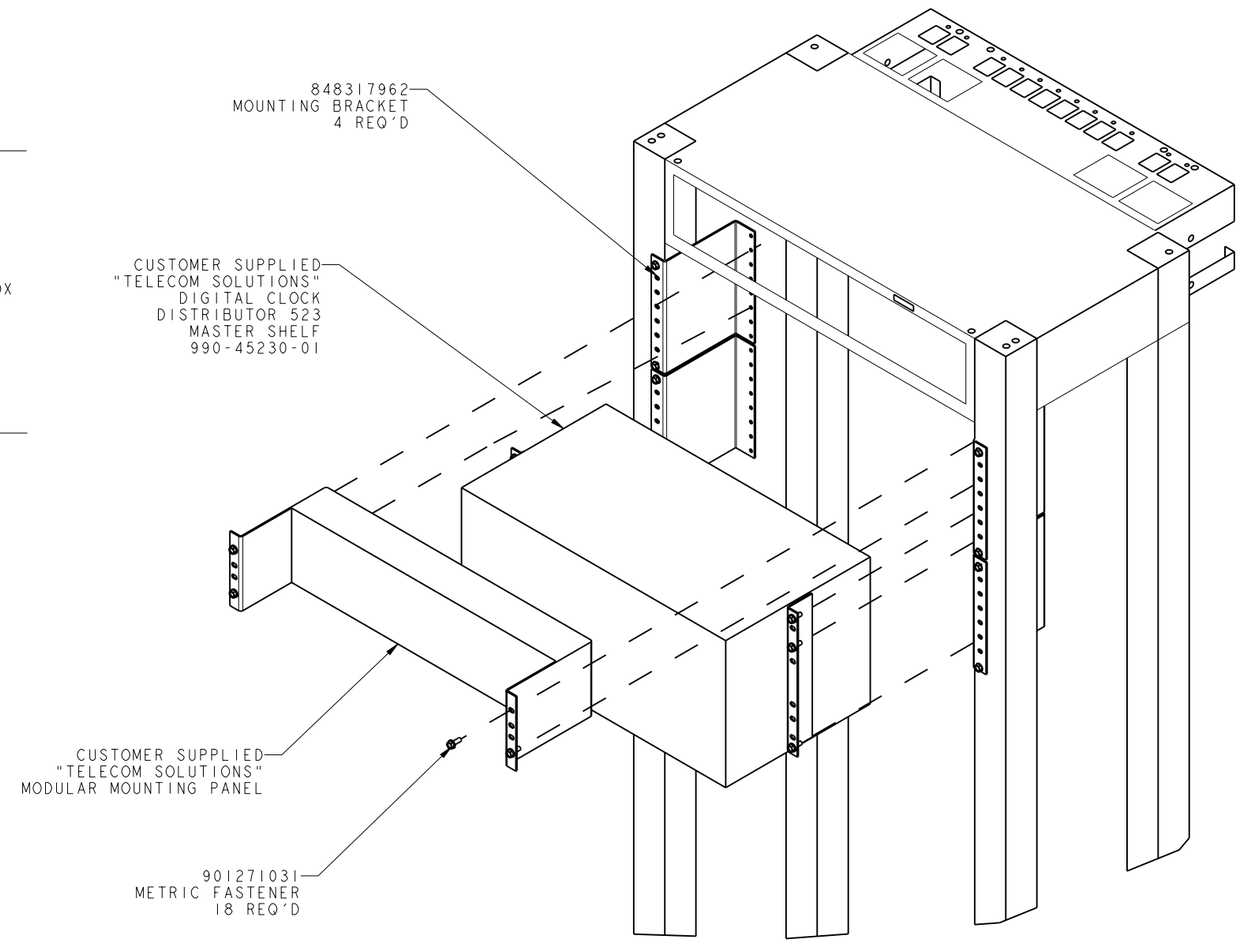

FIG. 16

MOUNTING CONFIGURATION OF CUSTOMER SUPPLIED DIGITAL CLOCK DISTRIBUTOR AND LIST 92 FIELD INSTALLED FINAL ASSEMBLY HARDWARE

NOTE:

1. DIGITAL CLOCK ASSEMBLY CAN BE MOUNTED AT ANY HEIGHT WITHIN THE CABINET.

TITLE: 5ESS MISCELLANOUS CABINET

THIRD ANGLE PROJECTION

LUCENT TECHNOLOGIES - PROPRIETARY
THIS DOCUMENT CONTAINS PROPRIETARY INFORMATION OF LUCENT TECHNOLOGIES AND IS NOT TO BE DISCLOSED OR USED EXCEPT IN ACCORDANCE WITH APPLICABLE AGREEMENTS

COPYRIGHT© 2000 LUCENT TECHNOLOGIES
UNPUBLISHED & NOT FOR PUBLICATION
ALL RIGHTS RESERVED

		SHEET	ISSUE	DWG SIZE
LUCENT TECHNOLOGIES	J5D005C-1	B15	113	C2/AIR

J5D005C-1

LU.EQPT.ISSUE-GEN.FRM NOV 1999

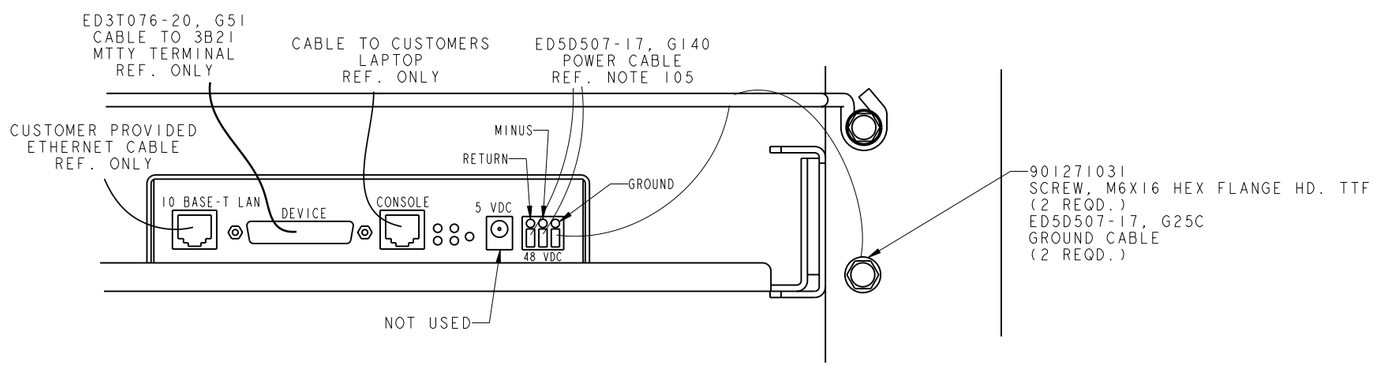

REAR VIEW OF FIG. 17
SCALE 1/1

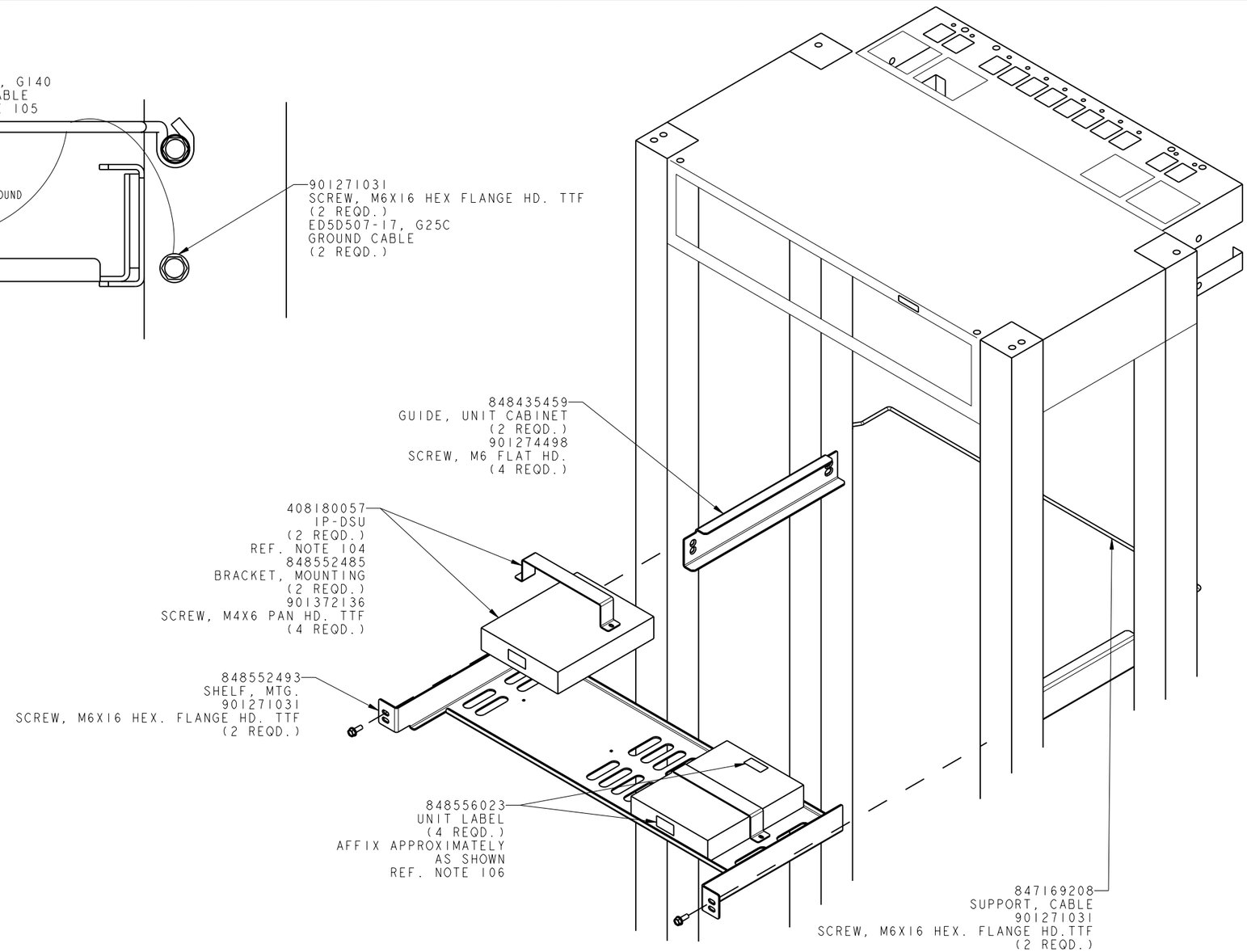

FIG. 17
MOUNTING ARRANGEMENT FOR THE
INTERNET PROTOCOL-DATA SERVICE UNIT (IP-DSU)
SCALE 5/16

J5D005C-1

TITLE
5ESS MISCELLANOUS CABINET

THIRD ANGLE PROJECTION

LUCENT TECHNOLOGIES - PROPRIETARY
THIS DOCUMENT CONTAINS PROPRIETARY INFORMATION OF
LUCENT TECHNOLOGIES AND IS NOT TO BE DISCLOSED OR USED
EXCEPT IN ACCORDANCE WITH APPLICABLE AGREEMENTS

COPYRIGHT© 2000 LUCENT TECHNOLOGIES
UNPUBLISHED & NOT FOR PUBLICATION
ALL RIGHTS RESERVED

LUCENT TECHNOLOGIES	J5D005C-1	SHEET	ISSUE	DWG SIZE
		B16	113	C2/AIR

LU.EQPT.ISSUE-GEN.FRM NOV 1999

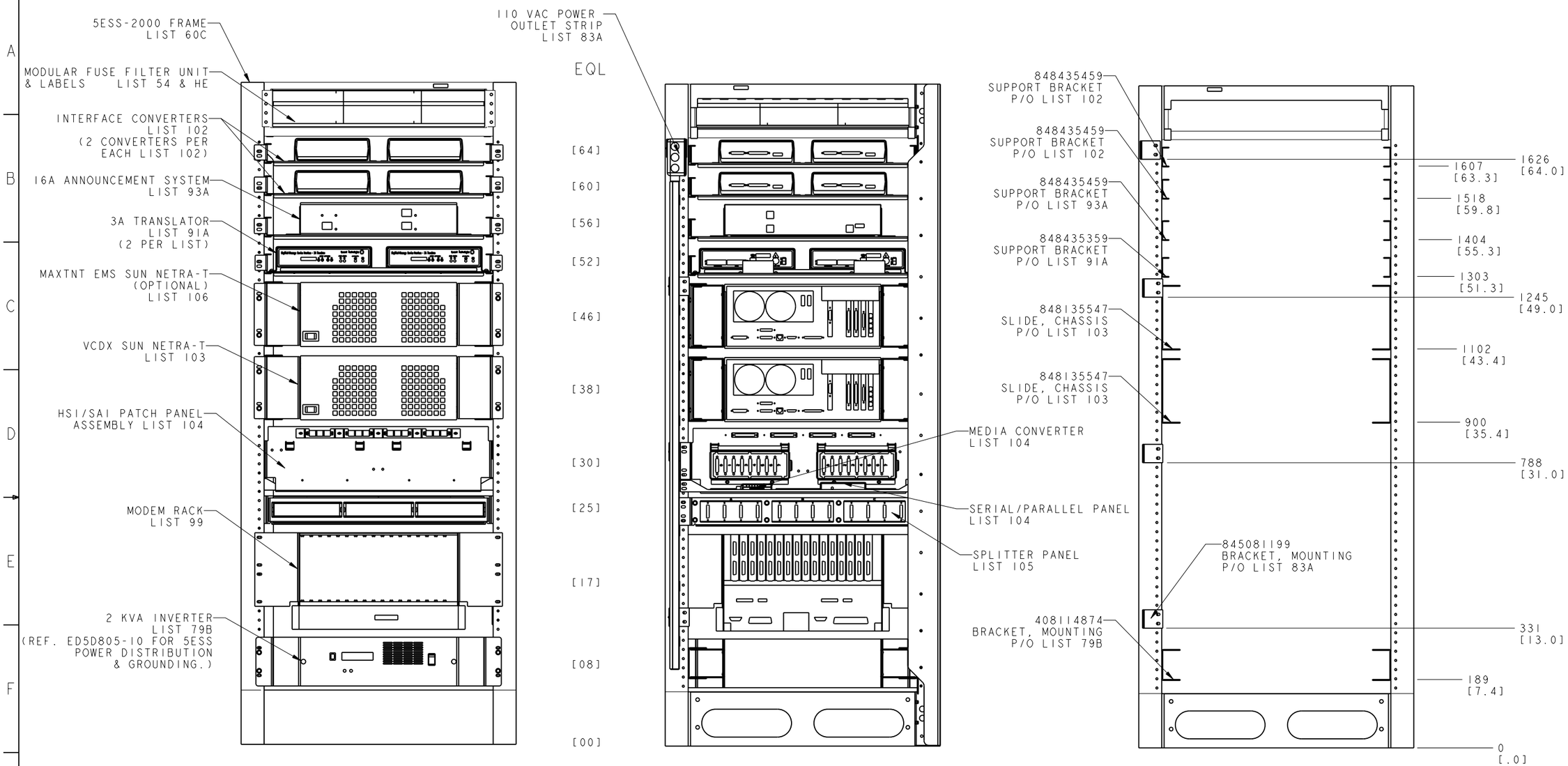

FIG. 18

NAR 7R/E NOW FIXED CABINET CONFIGURATION

SCALE 3/16

TITLE: 5ESS MISCELLANEOUS CABINET				
THIRD ANGLE PROJECTION	LUCENT TECHNOLOGIES - PROPRIETARY THIS DOCUMENT CONTAINS PROPRIETARY INFORMATION OF LUCENT TECHNOLOGIES AND IS NOT TO BE DISCLOSED OR USED EXCEPT IN ACCORDANCE WITH APPLICABLE AGREEMENTS COPYRIGHT© &COPYRIGHT_2000 LUCENT TECHNOLOGIES UNPUBLISHED & NOT FOR PUBLICATION ALL RIGHTS RESERVED			
LUCENT TECHNOLOGIES	J5D005C-1	SHEET B17	ISSUE 115	DWG SIZE C2/AIR

LU_EQPT_ISSUE-GEN.FRM NOV 1999

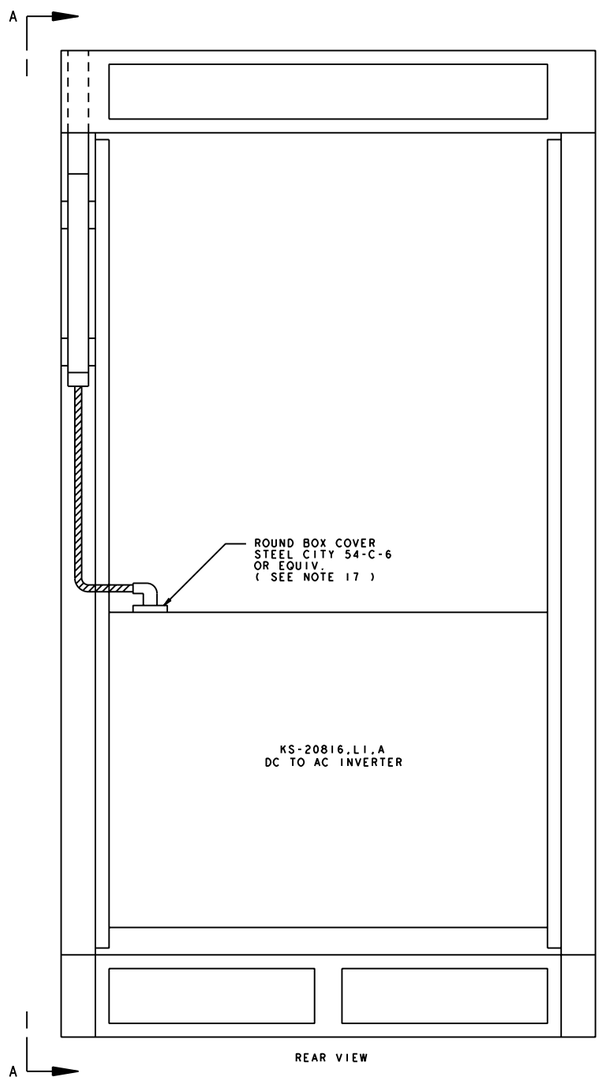

REAR VIEW

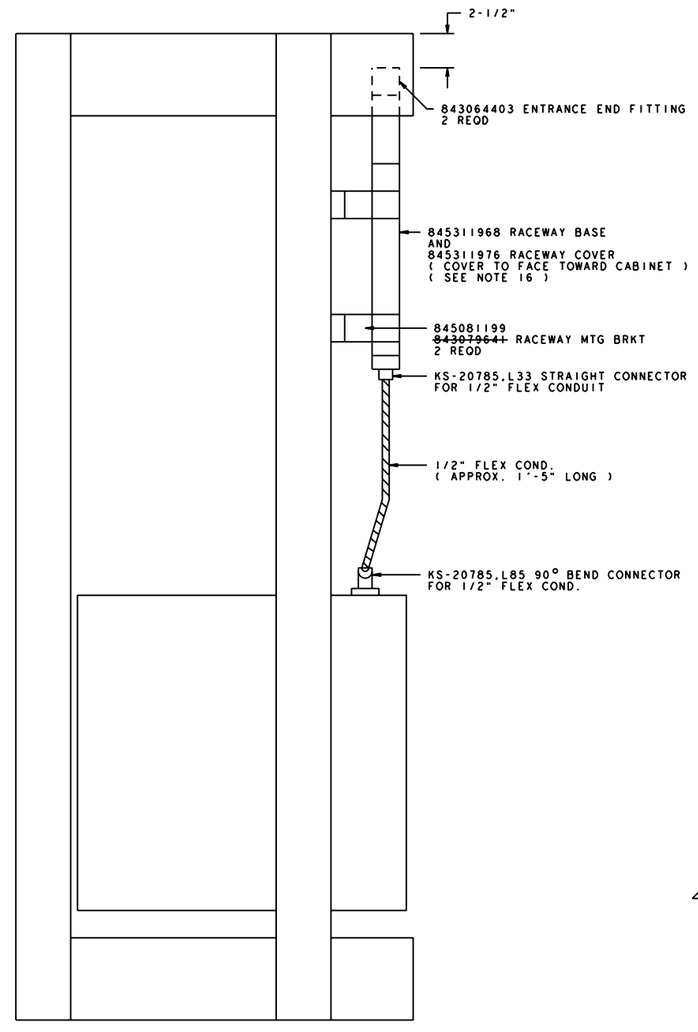

VIEW A-A

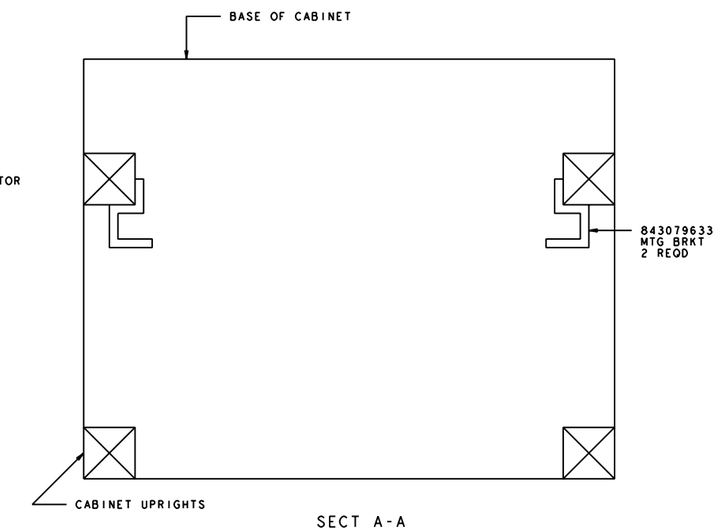

SECT A-A
LOCATION OF MTG BRKTS

FIG. A " DA "
LOCATION OF WIREMOLD FOR AC LEADS FROM THE INVERTER

TITLE
5ESS MISCELLANEOUS CABINET

THIRD ANGLE PROJECTION

LUCENT TECHNOLOGIES - PROPRIETARY
THIS DOCUMENT CONTAINS PROPRIETARY INFORMATION OF
LUCENT TECHNOLOGIES AND IS NOT TO BE DISCLOSED OR USED
EXCEPT IN ACCORDANCE WITH APPLICABLE AGREEMENTS

COPYRIGHT© 2000 LUCENT TECHNOLOGIES
UNPUBLISHED & NOT FOR PUBLICATION
ALL RIGHTS RESERVED

LUCENT TECHNOLOGIES	J5D005C-1	SHEET	ISSUE	DWG SIZE
		C1	113	C2/AIR

J5D005C-1

LU.EQPT.ISSUE-GEN.FRM NOV 1999

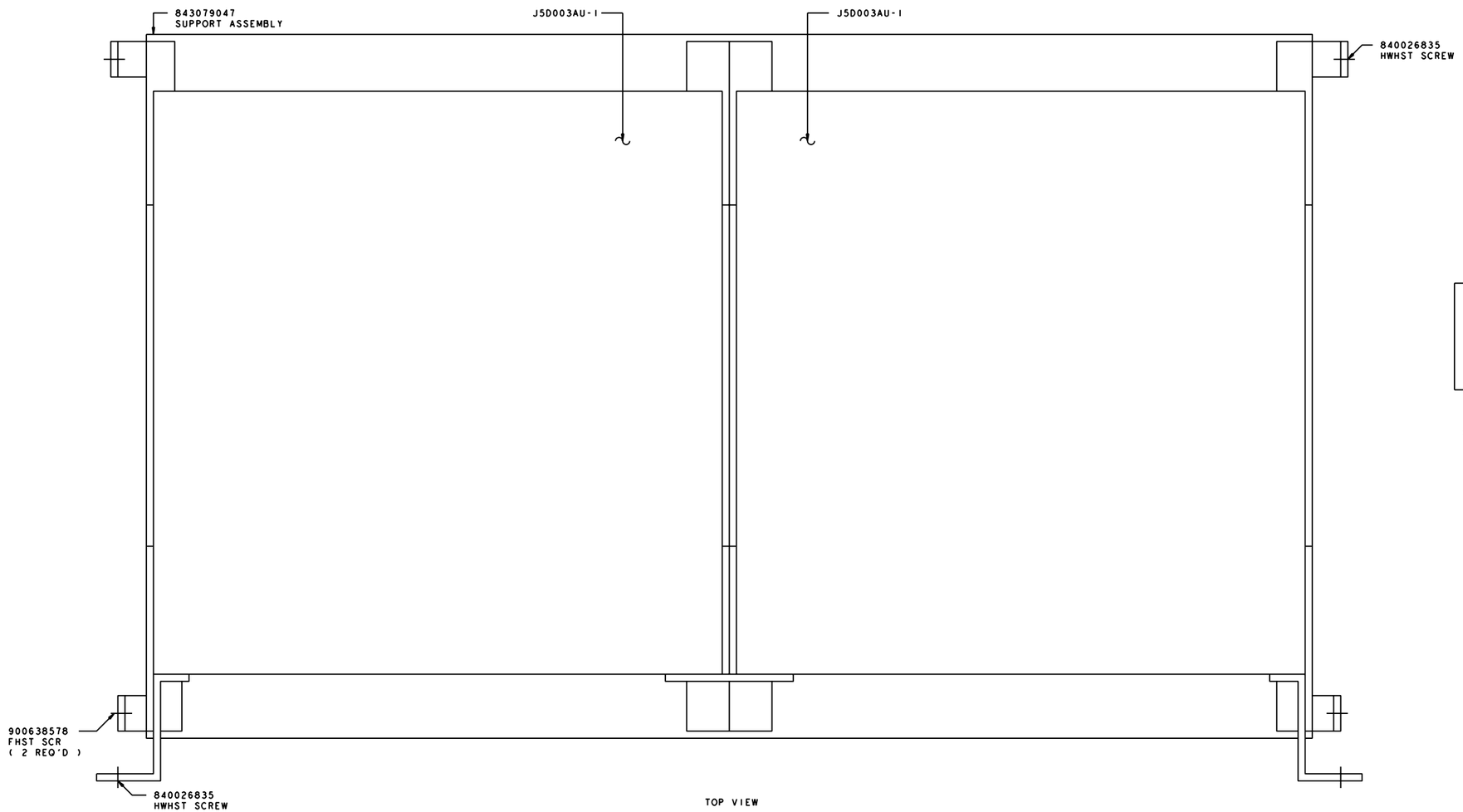

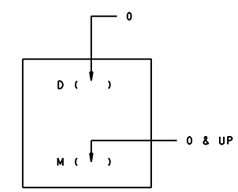

VIEW B-B
SHOP STAMPING

J5D005C-1

TITLE
5ESS MISCELLANEOUS CABINET

THIRD ANGLE PROJECTION

LUCENT TECHNOLOGIES - PROPRIETARY
THIS DOCUMENT CONTAINS PROPRIETARY INFORMATION OF
LUCENT TECHNOLOGIES AND IS NOT TO BE DISCLOSED OR USED
EXCEPT IN ACCORDANCE WITH APPLICABLE AGREEMENTS

COPYRIGHT© 2000 LUCENT TECHNOLOGIES
UNPUBLISHED & NOT FOR PUBLICATION
ALL RIGHTS RESERVED

LUCENT TECHNOLOGIES

J5D005C-1	SHEET	ISSUE	DWG SIZE
	C2	113	C2/AIR

LU.EQPT.ISSUE-GEN.FRM NOV 1999

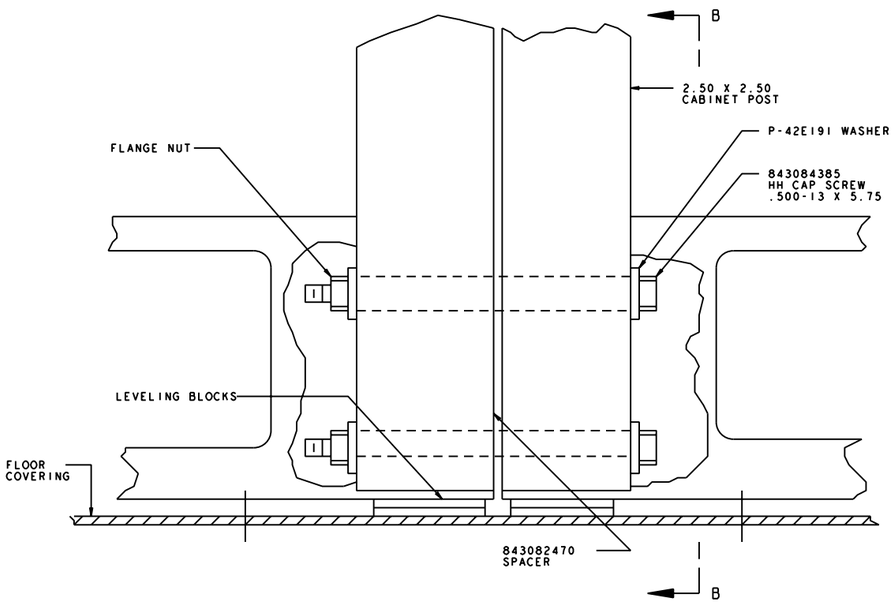

FRONT VIEW
(DOORS REMOVED)
METHOD OF JUNCTIONING ONE CABINET TO ANOTHER CABINET

FIG. B

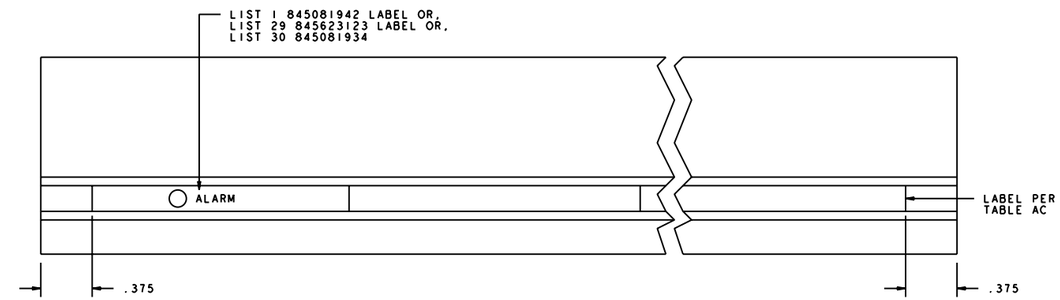

FIG. C (DA)

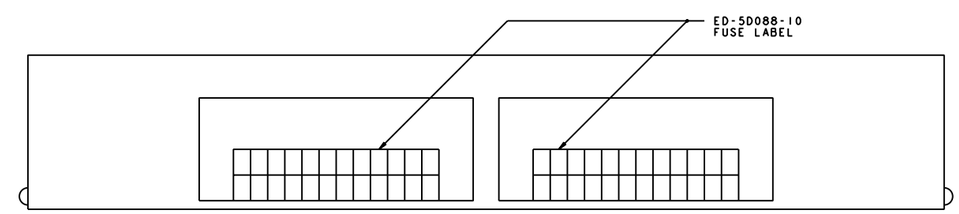

FIG. D (DA)

BEZEL IN MAINTENANCE (OPEN) POSITION

TITLE 5ESS MISCELLANEOUS CABINET				
THIRD ANGLE PROJECTION	LUCENT TECHNOLOGIES - PROPRIETARY THIS DOCUMENT CONTAINS PROPRIETARY INFORMATION OF LUCENT TECHNOLOGIES AND IS NOT TO BE DISCLOSED OR USED EXCEPT IN ACCORDANCE WITH APPLICABLE AGREEMENTS COPYRIGHT© 2000 LUCENT TECHNOLOGIES UNPUBLISHED & NOT FOR PUBLICATION ALL RIGHTS RESERVED			
LUCENT TECHNOLOGIES	J5D005C-1	SHEET C3	ISSUE 113	DWG SIZE C2/AIR

J5D005C-1

LU.EOPT.ISSUE-GEN.FRM NOV 1999

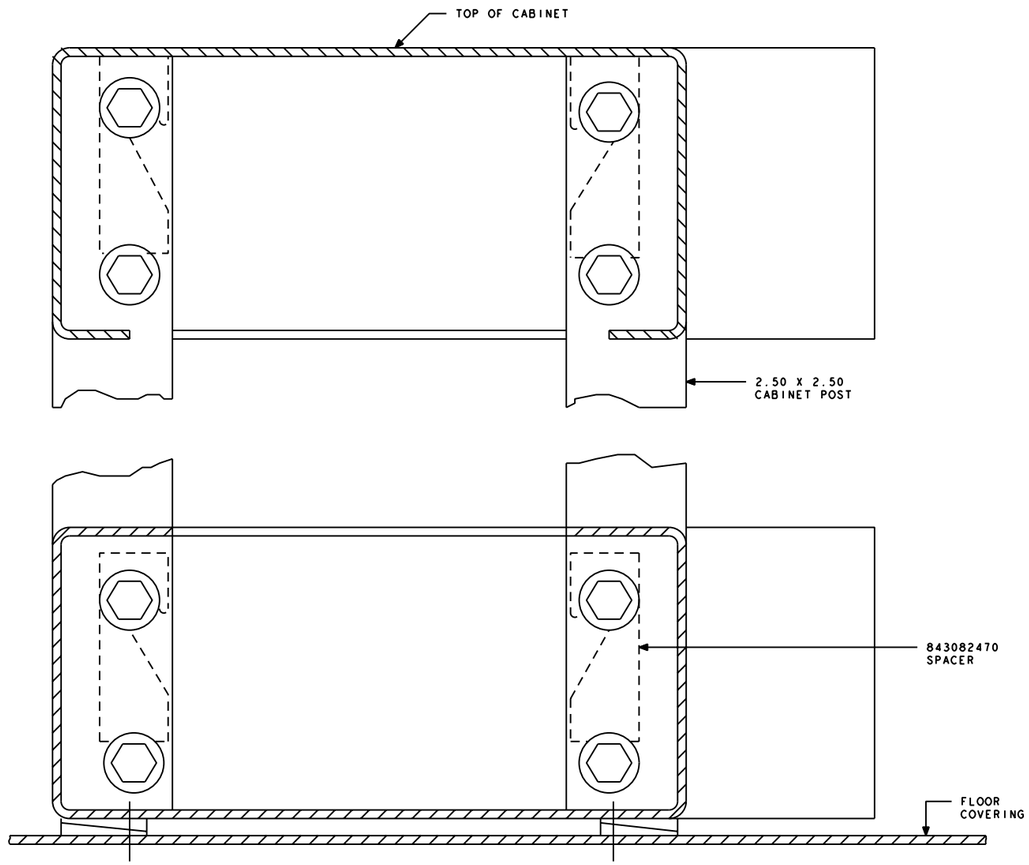

VIEW B-B

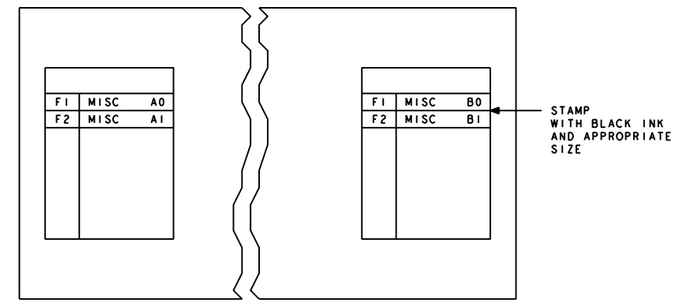

FIG. E (DA)
PARTIAL FRONT VIEW
ED-83024-30,G2

SHOWING STAMPING OF THE
DESIGNATION CARDS
(SEE NOTE 71)

TITLE
5ESS MISCELLANEOUS CABINET

THIRD ANGLE PROJECTION

LUCENT TECHNOLOGIES - PROPRIETARY
THIS DOCUMENT CONTAINS PROPRIETARY INFORMATION OF
LUCENT TECHNOLOGIES AND IS NOT TO BE DISCLOSED OR USED
EXCEPT IN ACCORDANCE WITH APPLICABLE AGREEMENTS

COPYRIGHT© 2000 LUCENT TECHNOLOGIES
UNPUBLISHED & NOT FOR PUBLICATION
ALL RIGHTS RESERVED

LUCENT TECHNOLOGIES	J5D005C-1	SHEET	ISSUE	DWG SIZE
		C4	113	C2/AIR

J5D005C-1

LU.EOPT.:ISSUE-GEN.FRM NOV 1999

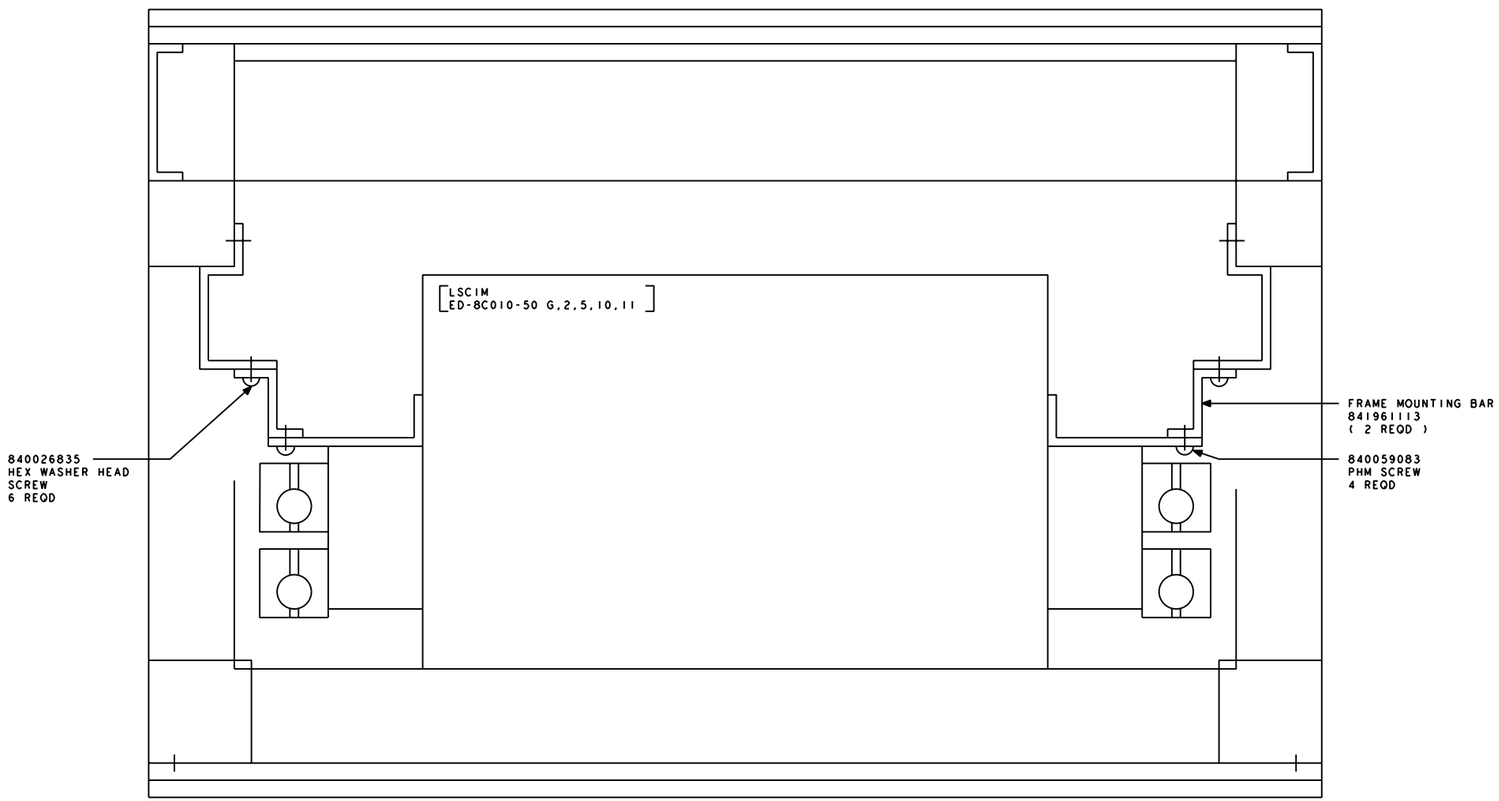

FRONT
FIG. F
TOP VIEW
MOUNTING OF ED-8C010-50

TITLE
5ESS MISCELLANEOUS CABINET

THIRD ANGLE PROJECTION

LUCENT TECHNOLOGIES - PROPRIETARY
THIS DOCUMENT CONTAINS PROPRIETARY INFORMATION OF
LUCENT TECHNOLOGIES AND IS NOT TO BE DISCLOSED OR USED
EXCEPT IN ACCORDANCE WITH APPLICABLE AGREEMENTS

COPYRIGHT© 2000 LUCENT TECHNOLOGIES
UNPUBLISHED & NOT FOR PUBLICATION
ALL RIGHTS RESERVED

		SHEET	ISSUE	DWG SIZE
LUCENT TECHNOLOGIES	J5D005C-1	C5	113	C2/AIR

J5D005C-1

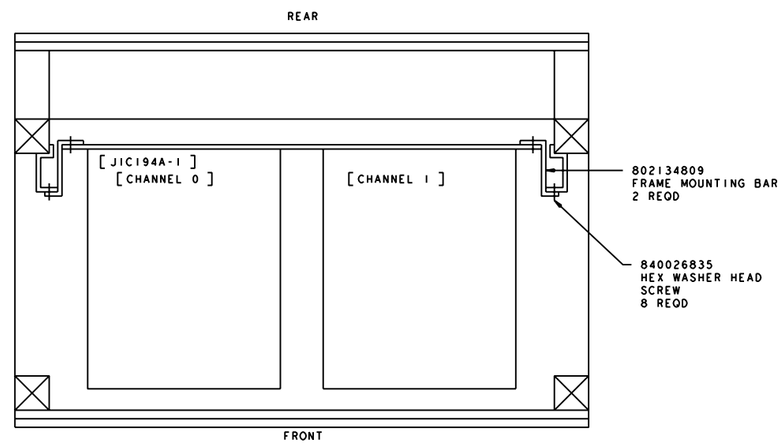

FIG. G
TOP VIEW
MOUNTING OF 14A RECORDED
ANNOUNCEMENT UNIT
(TYPICAL)

TITLE 5ESS MISCELLANEOUS CABINET				
THIRD ANGLE PROJECTION	LUCENT TECHNOLOGIES - PROPRIETARY THIS DOCUMENT CONTAINS PROPRIETARY INFORMATION OF LUCENT TECHNOLOGIES AND IS NOT TO BE DISCLOSED OR USED EXCEPT IN ACCORDANCE WITH APPLICABLE AGREEMENTS COPYRIGHT© 2000 LUCENT TECHNOLOGIES UNPUBLISHED & NOT FOR PUBLICATION ALL RIGHTS RESERVED			
LUCENT TECHNOLOGIES	J5D005C-1	SHEET C6	ISSUE 113	DWG SIZE C2/AIR

J5D005C-1

LU.EOPT.ISSUE-GEN.FRM NOV 1999

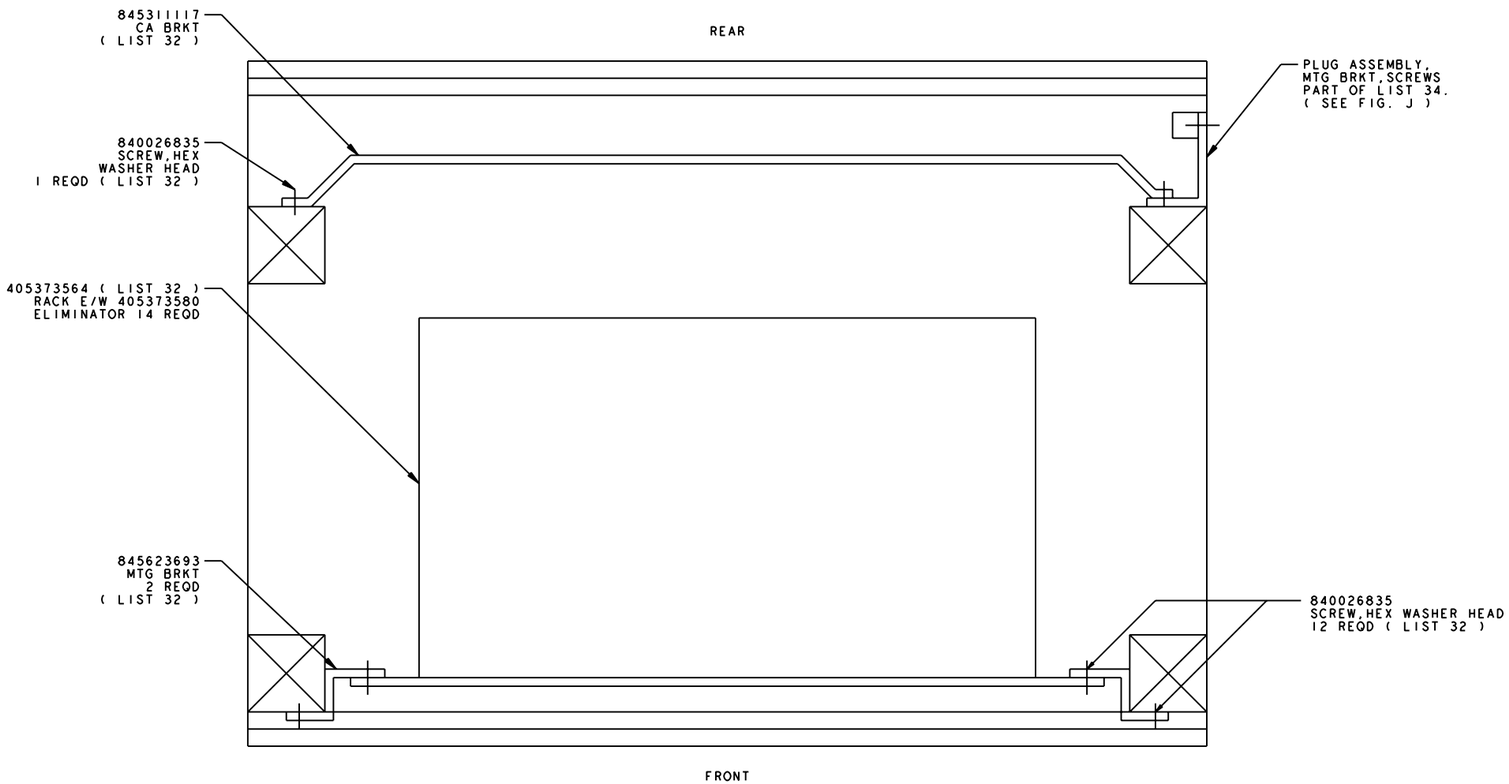

FIG. H " DA "

TITLE			
5ESS MISCELLANEOUS CABINET			
THIRD ANGLE PROJECTION	LUCENT TECHNOLOGIES - PROPRIETARY THIS DOCUMENT CONTAINS PROPRIETARY INFORMATION OF LUCENT TECHNOLOGIES AND IS NOT TO BE DISCLOSED OR USED EXCEPT IN ACCORDANCE WITH APPLICABLE AGREEMENTS COPYRIGHT© 2000 LUCENT TECHNOLOGIES UNPUBLISHED & NOT FOR PUBLICATION ALL RIGHTS RESERVED		
LUCENT TECHNOLOGIES	J5D005C-1	SHEET C7	ISSUE 113	DWG SIZE C2/AIR

J5D005C-1

LU.EOPT.ISSUE-GEN.FRM NOV 1999

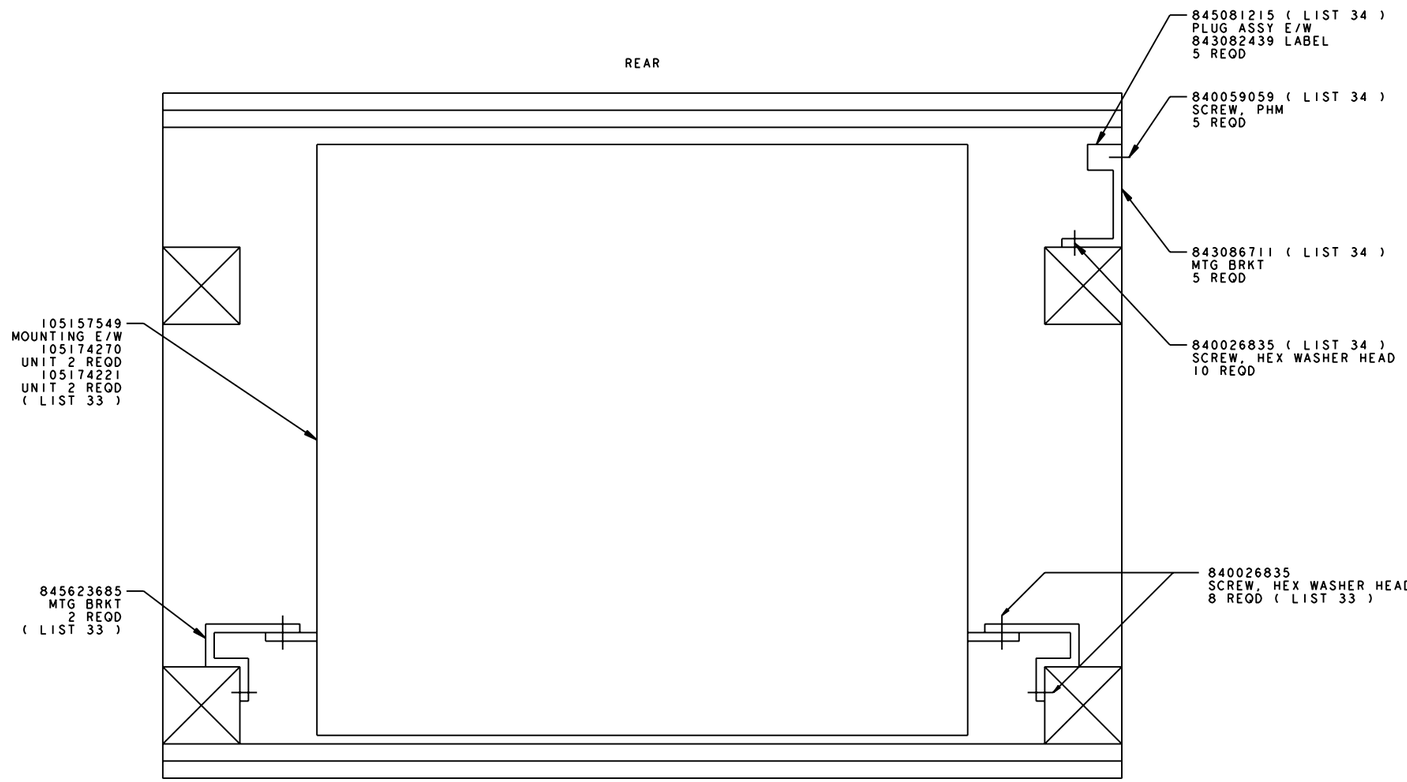

FIG. J " DA "
(LIST'S 33 & 34)

TITLE
5ESS MISCELLANEOUS CABINET

THIRD ANGLE PROJECTION

LUCENT TECHNOLOGIES - PROPRIETARY
THIS DOCUMENT CONTAINS PROPRIETARY INFORMATION OF
LUCENT TECHNOLOGIES AND IS NOT TO BE DISCLOSED OR USED
EXCEPT IN ACCORDANCE WITH APPLICABLE AGREEMENTS

COPYRIGHT© 2000 LUCENT TECHNOLOGIES
UNPUBLISHED & NOT FOR PUBLICATION
ALL RIGHTS RESERVED

LUCENT TECHNOLOGIES	J5D005C-1	SHEET	ISSUE	DWG SIZE
		C8	113	C2/AIR

J5D005C-1

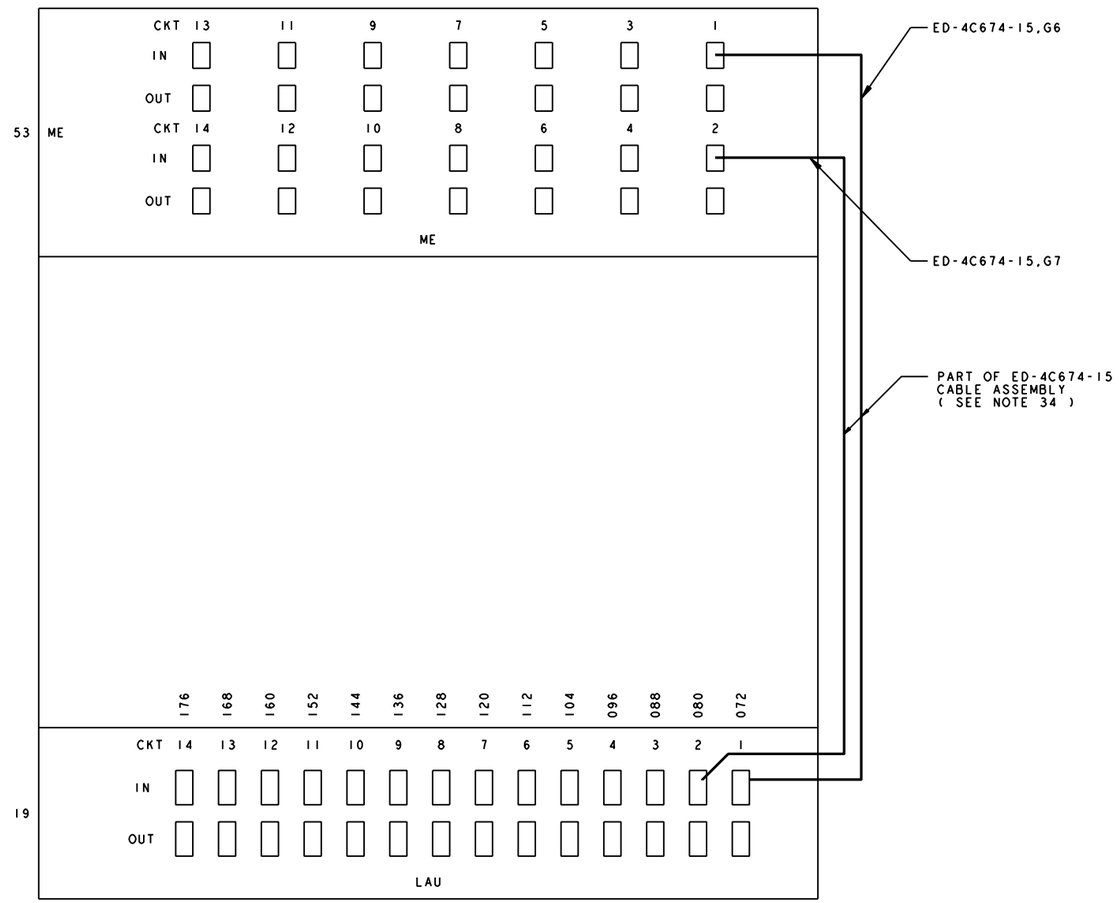

FIG. K " DA "

REAR VIEW
SHOWING CIRCUIT AND CONNECTING
INFORMATION FOR THE MODEM ELIMINATOR
UNIT (LIST 32) AND THE LAU (LIST 35)
(SEE NOTE 34)

TITLE
5ESS MISCELLANEOUS CABINET

THIRD ANGLE PROJECTION

LUCENT TECHNOLOGIES - PROPRIETARY
THIS DOCUMENT CONTAINS PROPRIETARY INFORMATION OF
LUCENT TECHNOLOGIES AND IS NOT TO BE DISCLOSED OR USED
EXCEPT IN ACCORDANCE WITH APPLICABLE AGREEMENTS

COPYRIGHT© 2000 LUCENT TECHNOLOGIES
UNPUBLISHED & NOT FOR PUBLICATION
ALL RIGHTS RESERVED

LUCENT TECHNOLOGIES	J5D005C-1	SHEET	ISSUE	DWG SIZE
		C9	113	C2/AIR

J5D005C-1

LU.EQPT.ISSUE-GEN.FRM NOV 1999

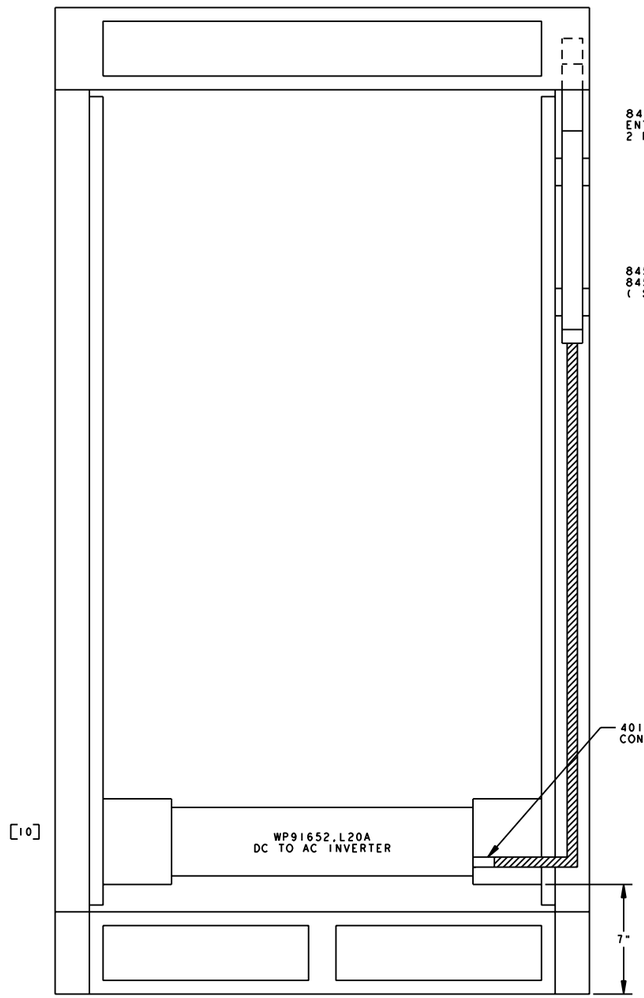

REAR VIEW

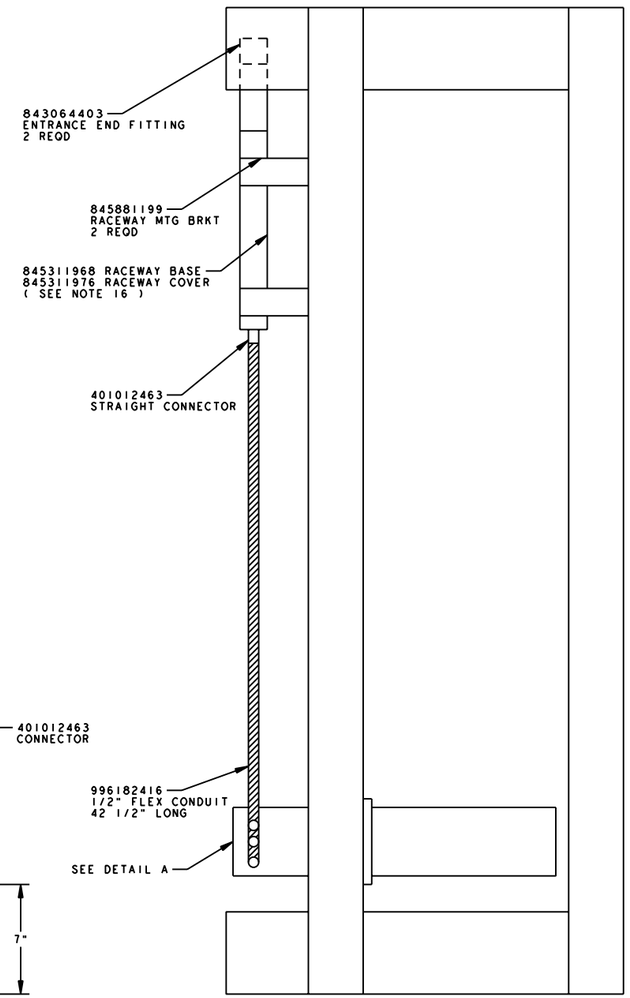

SIDE VIEW

FIG. L (DA)

LOCATION OF WIREMOLD FOR AC LEADS FROM THE INVERTER
LISTS 41A AND 44A

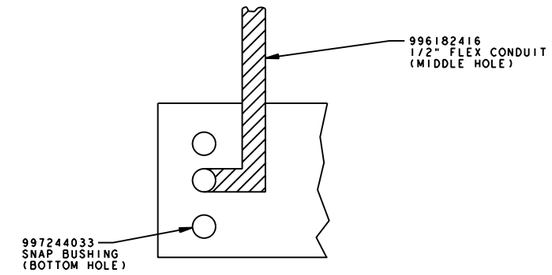

DET. A (DA)

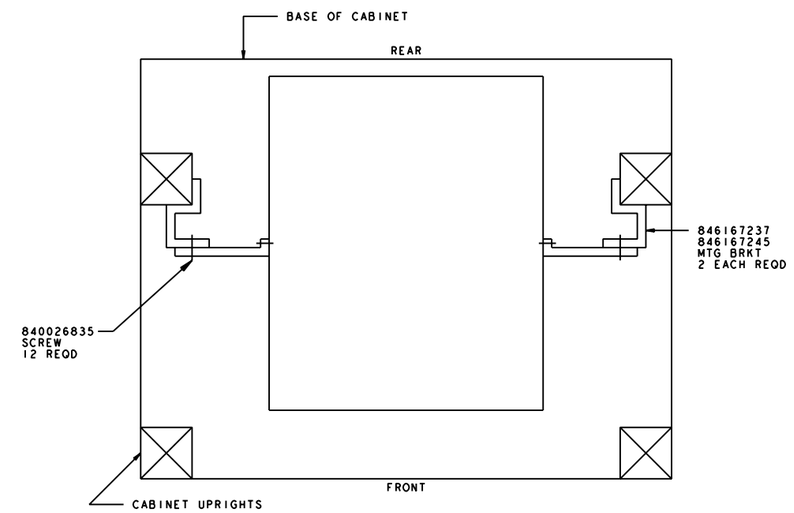

FIG. M (DA)

LOCATION OF MTG BRKTS FOR THE INVERTER

TITLE 5ESS MISCELLANEOUS CABINET

THIRD ANGLE PROJECTION

LUCENT TECHNOLOGIES - PROPRIETARY
THIS DOCUMENT CONTAINS PROPRIETARY INFORMATION OF
LUCENT TECHNOLOGIES AND IS NOT TO BE DISCLOSED OR USED
EXCEPT IN ACCORDANCE WITH APPLICABLE AGREEMENTS

COPYRIGHT© 2000 LUCENT TECHNOLOGIES
UNPUBLISHED & NOT FOR PUBLICATION
ALL RIGHTS RESERVED

LUCENT TECHNOLOGIES	J5D005C-1	SHEET	ISSUE	DWG SIZE
		C10	113	C2/AIR

J5D005C-1

LU.EOPT.ISSUE-GEN.FRM NOV 1999

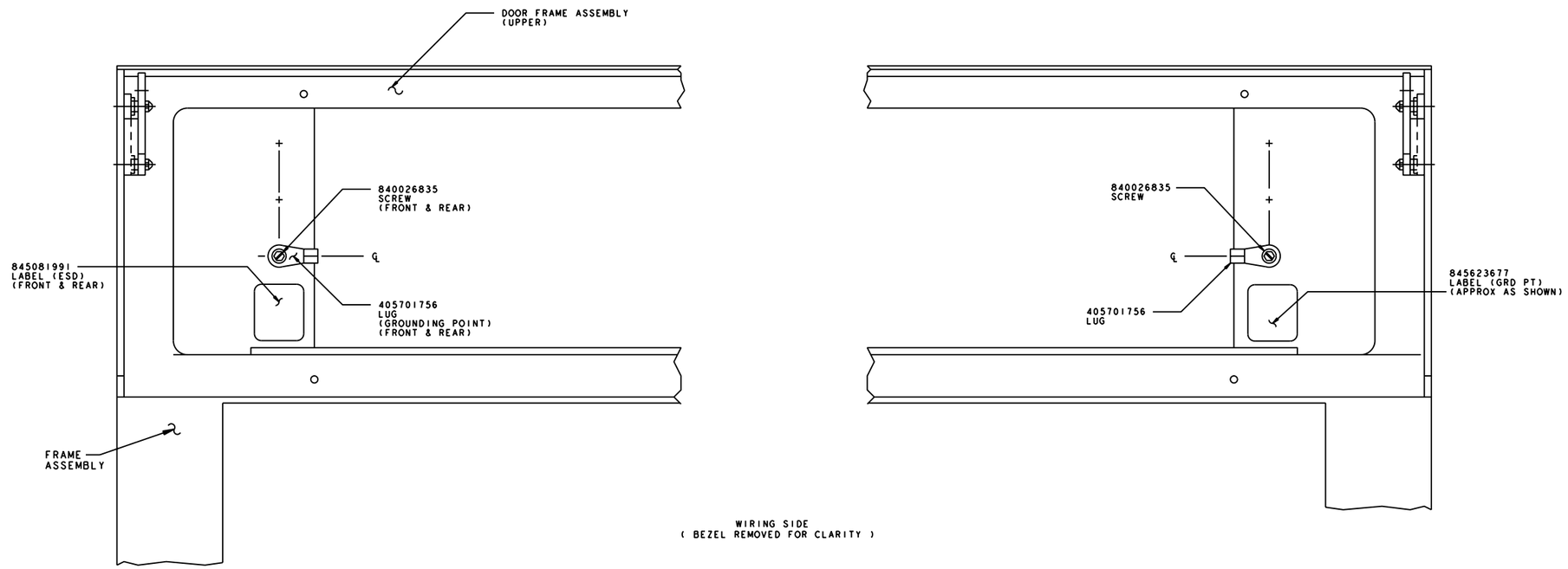

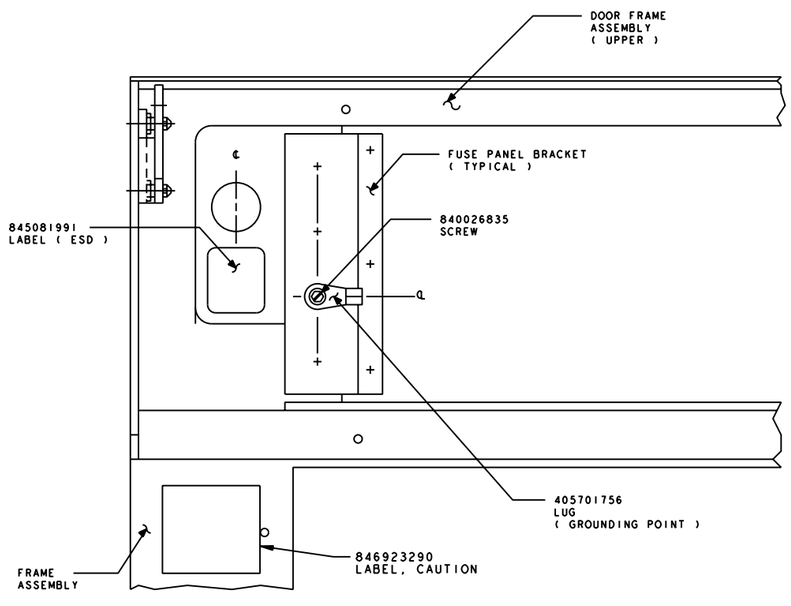

FIG. N

CLASSIC CABINET

TITLE: 5ESS MISCELLANEOUS CABINET				
THIRD ANGLE PROJECTION	LUCENT TECHNOLOGIES - PROPRIETARY THIS DOCUMENT CONTAINS PROPRIETARY INFORMATION OF LUCENT TECHNOLOGIES AND IS NOT TO BE DISCLOSED OR USED EXCEPT IN ACCORDANCE WITH APPLICABLE AGREEMENTS COPYRIGHT© 2000 LUCENT TECHNOLOGIES UNPUBLISHED & NOT FOR PUBLICATION ALL RIGHTS RESERVED			
LUCENT TECHNOLOGIES	J5D005C-1	SHEET C11	ISSUE 113	DWG SIZE C2/AIR

J5D005C-1

LU.EQPT.ISSUE-GEN.FRM NOV 1999

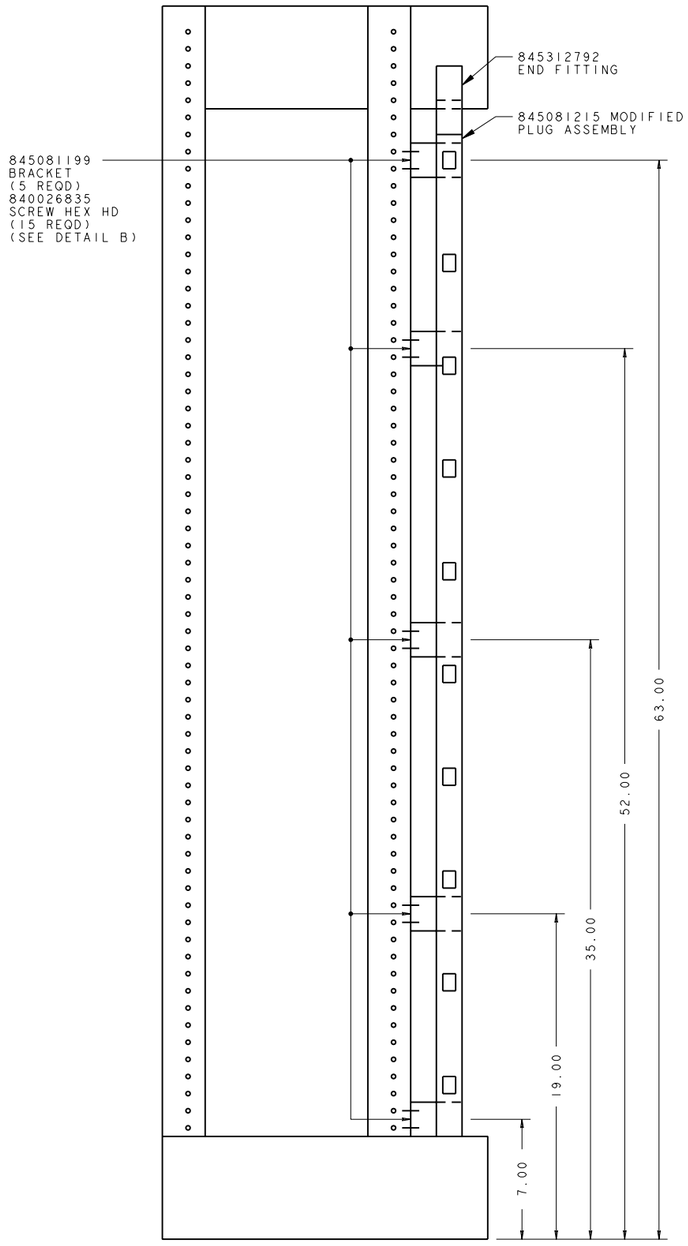

SIDE VIEW
FIG. P (DA)
LOCATION OF PLUG ASSEMBLY LIST 46

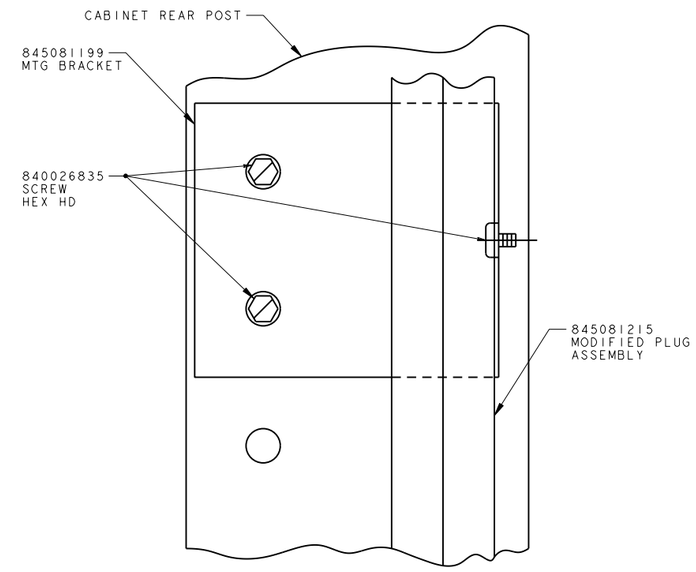

DETAIL B (DA)
RIGHT REAR CABINET POST SHOWING
MOUNTING OF BRACKET FOR PLUG ASSEMBLY
LIST 46

TITLE
5ESS MISCELLANEOUS CABINET

THIRD ANGLE PROJECTION

LUCENT TECHNOLOGIES - PROPRIETARY
THIS DOCUMENT CONTAINS PROPRIETARY INFORMATION OF
LUCENT TECHNOLOGIES AND IS NOT TO BE DISCLOSED OR USED
EXCEPT IN ACCORDANCE WITH APPLICABLE AGREEMENTS

COPYRIGHT© 2000 LUCENT TECHNOLOGIES
UNPUBLISHED & NOT FOR PUBLICATION
ALL RIGHTS RESERVED

LUCENT TECHNOLOGIES	J5D005C-1	SHEET	ISSUE	DWG SIZE
		C12	113	C2/AIR

J5D005C-1

LU.EQPT.ISSUE-GEN.FRM NOV 1999

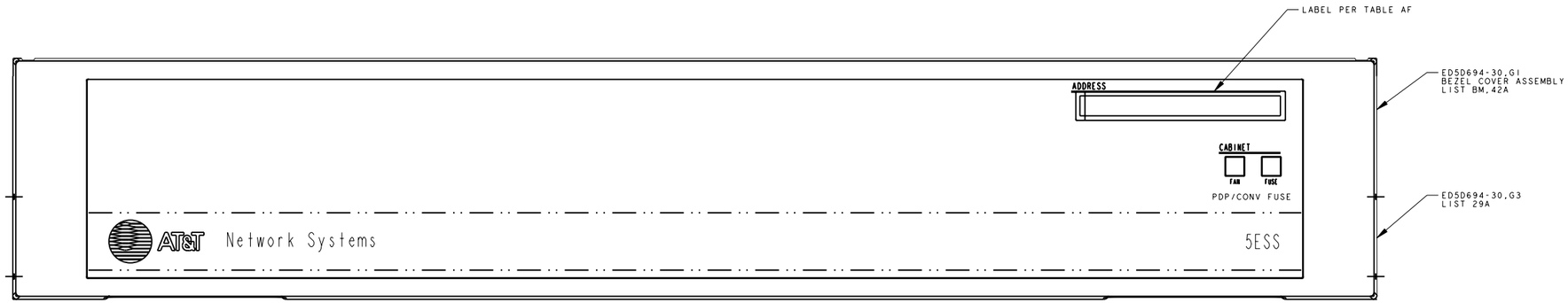

FIG. R (DA)
FRONT BEZEL COVER

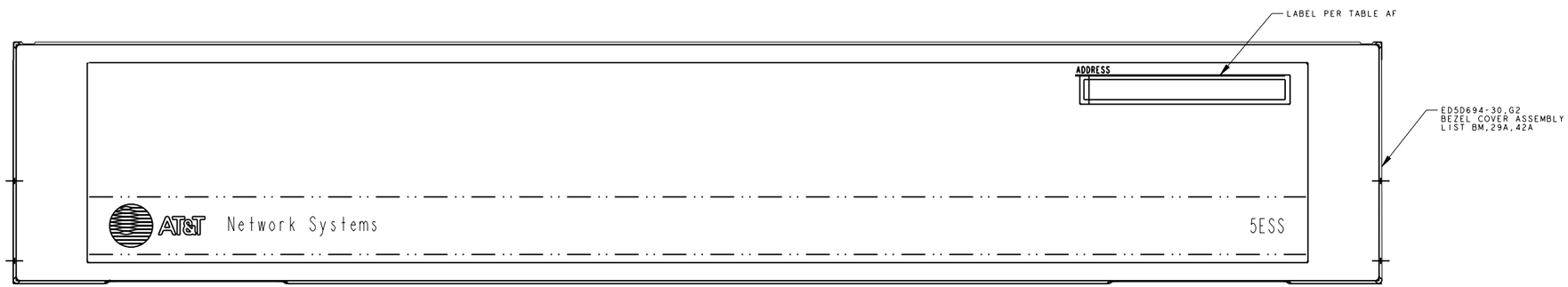

FIG. S (DA)
REAR BEZEL COVER

TITLE 5ESS MISCELLANEOUS CABINET (P)				
THIRD ANGLE PROJECTION	LUCENT TECHNOLOGIES - PROPRIETARY THIS DOCUMENT CONTAINS PROPRIETARY INFORMATION OF LUCENT TECHNOLOGIES AND IS NOT TO BE DISCLOSED OR USED EXCEPT IN ACCORDANCE WITH APPLICABLE AGREEMENTS COPYRIGHT© 2000 LUCENT TECHNOLOGIES UNPUBLISHED & NOT FOR PUBLICATION ALL RIGHTS RESERVED			
LUCENT TECHNOLOGIES	J5D005C-1	SHEET C13	ISSUE 113	DWG SIZE C2/AIR

J5D005C-1

LU.EQPT.ISSUE-GEN.FRM NOV 1999

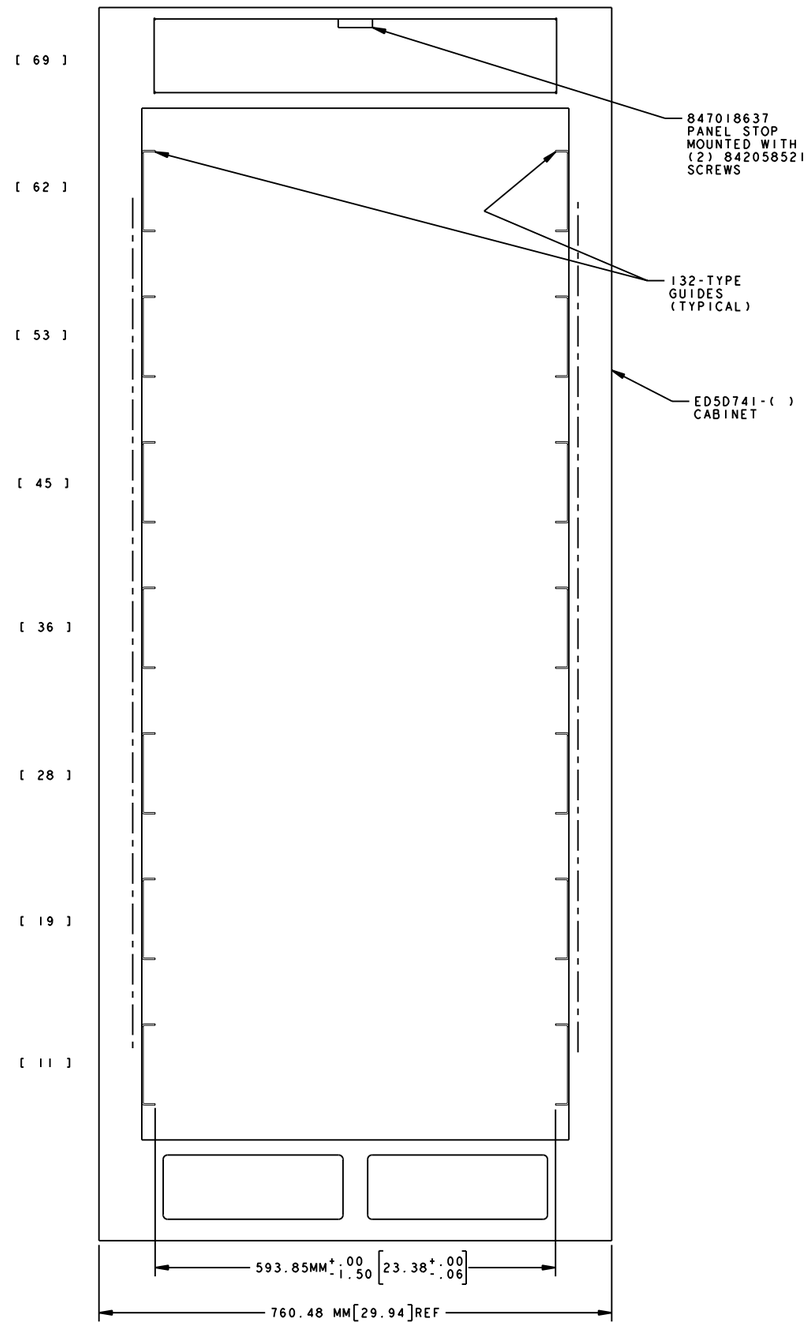

FRONT VIEW
DOORS REMOVED

FIG. T

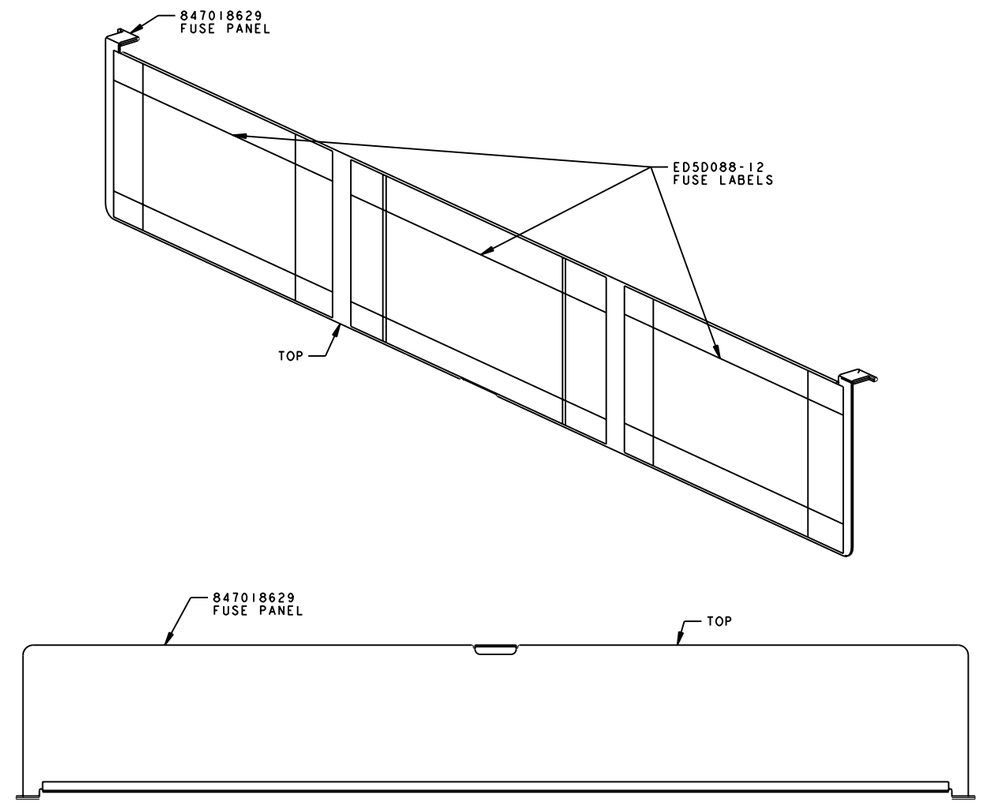

NOTE: FOR PROPER LABELS & PLACEMENTS SEE J5D003FJ-1

FIG. U

GROUP 60,60A,60B,60C
5ESS-2000
CABINET

J5D005C-1

TITLE 5ESS MISCELLANEOUS CABINET

THIRD ANGLE PROJECTION

LUCENT TECHNOLOGIES - PROPRIETARY
THIS DOCUMENT CONTAINS PROPRIETARY INFORMATION OF
LUCENT TECHNOLOGIES AND IS NOT TO BE DISCLOSED OR USED
EXCEPT IN ACCORDANCE WITH APPLICABLE AGREEMENTS

COPYRIGHT© 2000 LUCENT TECHNOLOGIES
UNPUBLISHED & NOT FOR PUBLICATION
ALL RIGHTS RESERVED

LUCENT TECHNOLOGIES	J5D005C-1	SHEET	ISSUE	DWG SIZE
		C14	113	C2/AIR

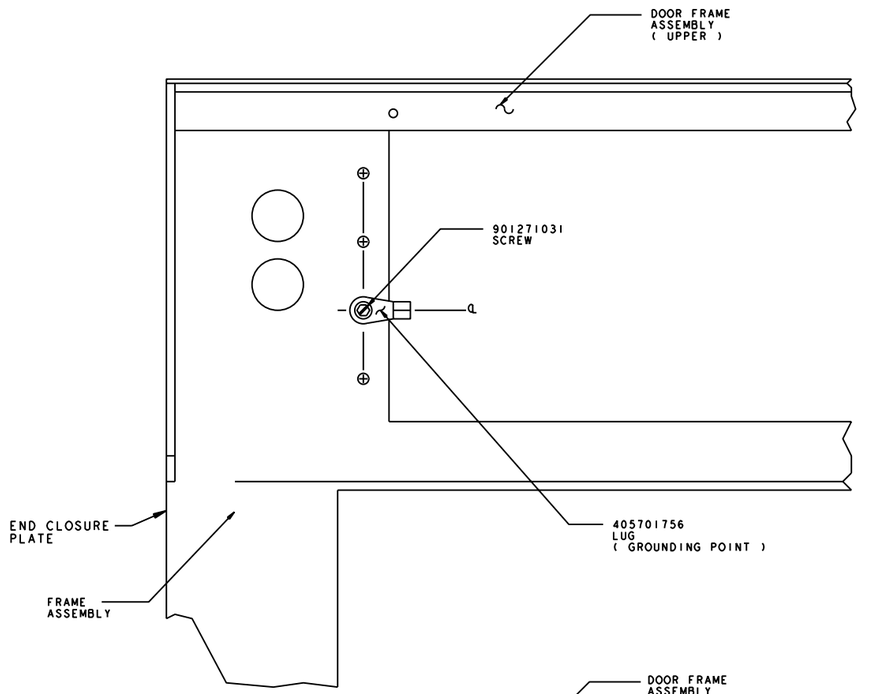

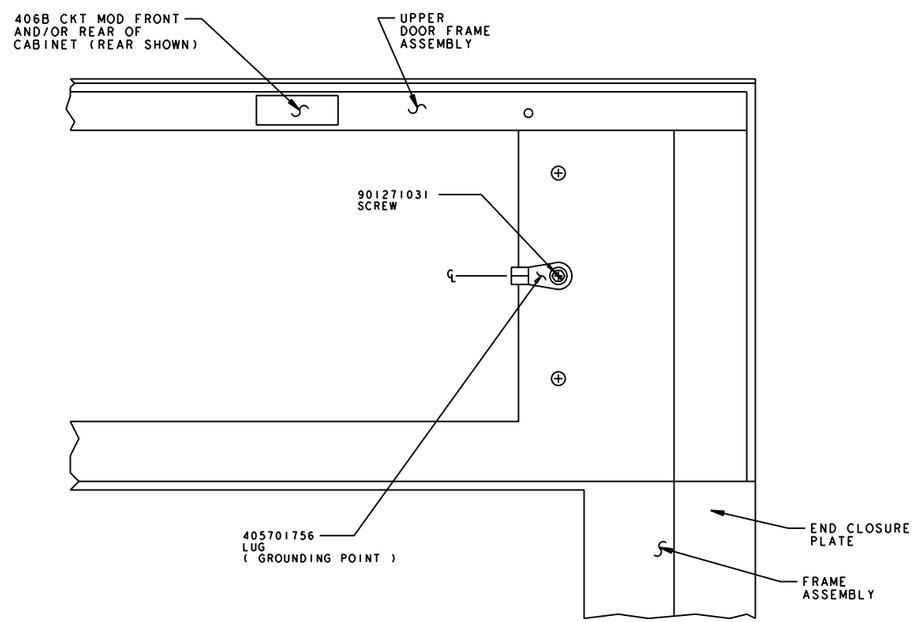

WIRING SIDE
(DOORS REMOVED FOR CLARITY)

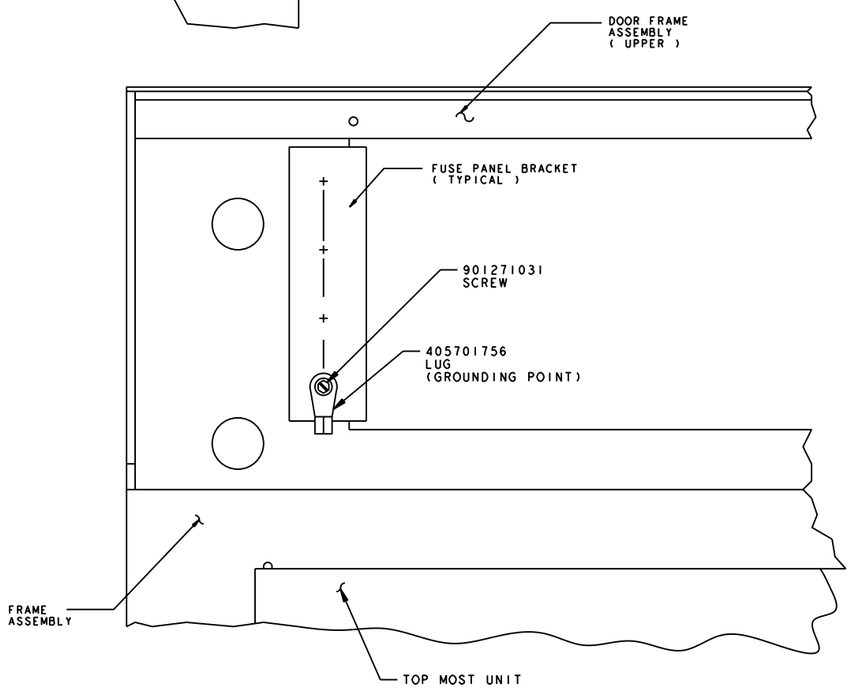

NOTE: FOR PROPER LABELS & PLACEMENT SEE J5D055A-1

EQUIPMENT SIDE
EU(DOORS REMOVED FOR CLARITY)

FIG. V
5ESS-2000 CABINET

J5D005C-1

TITLE: 5ESS MISCELLANEOUS CABINET				
THIRD ANGLE PROJECTION	LUCENT TECHNOLOGIES - PROPRIETARY THIS DOCUMENT CONTAINS PROPRIETARY INFORMATION OF LUCENT TECHNOLOGIES AND IS NOT TO BE DISCLOSED OR USED EXCEPT IN ACCORDANCE WITH APPLICABLE AGREEMENTS COPYRIGHT© 2000 LUCENT TECHNOLOGIES UNPUBLISHED & NOT FOR PUBLICATION ALL RIGHTS RESERVED			
LUCENT TECHNOLOGIES	J5D005C-1	SHEET C15	ISSUE 113	DWG SIZE C2/AIR

LU.EQPT.ISSUE-GEN.FRM NOV 1999

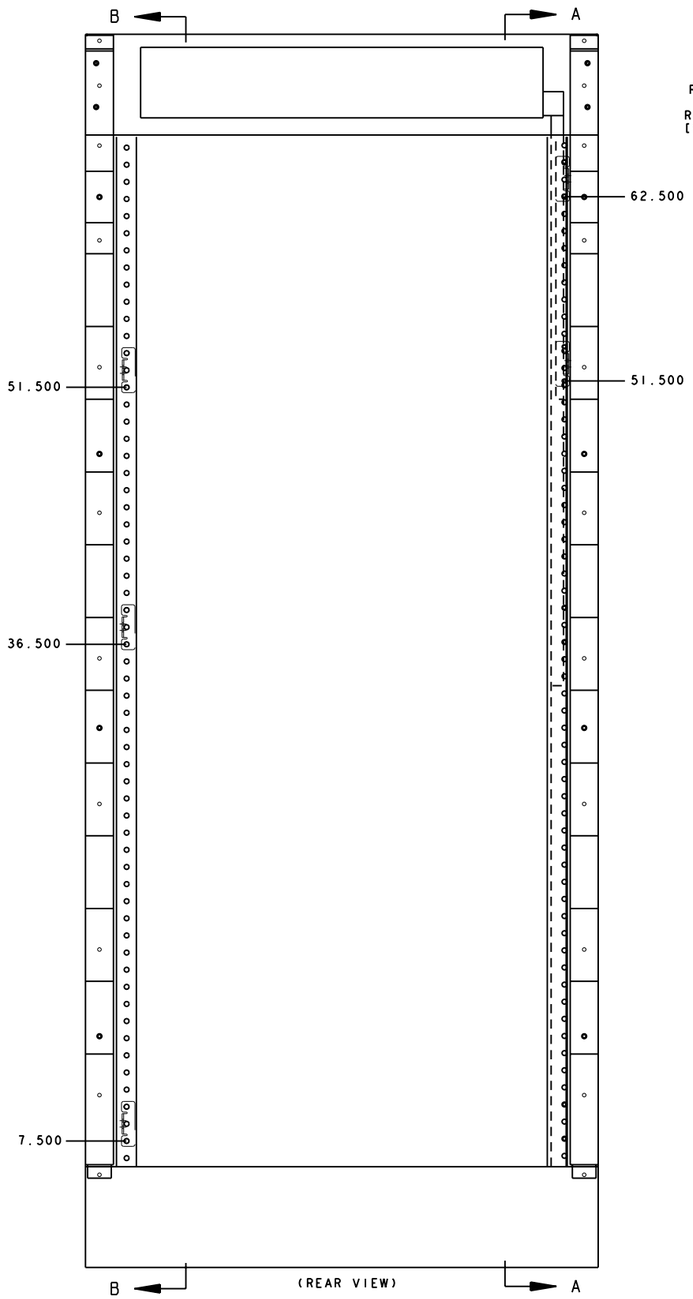

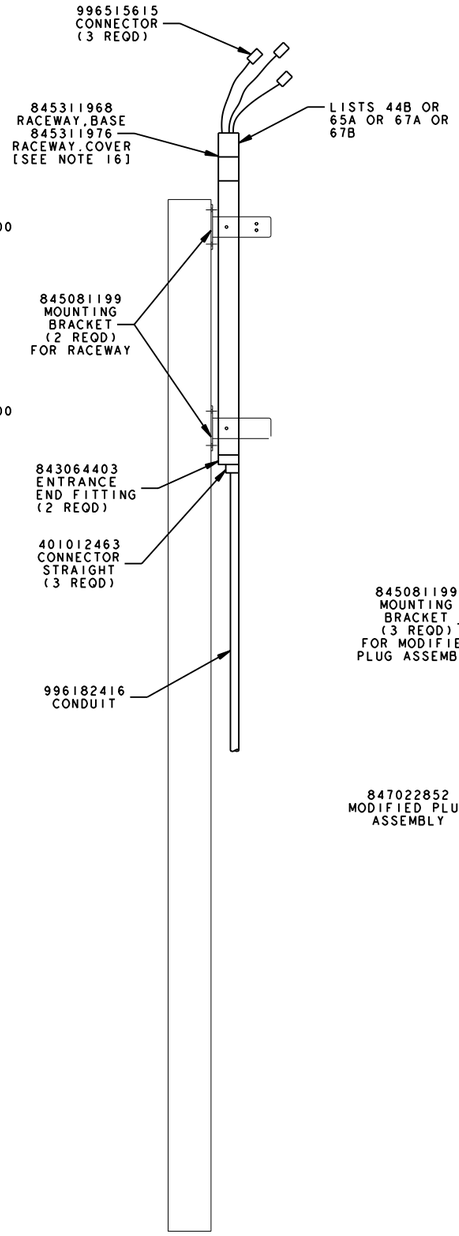

SEC A-A

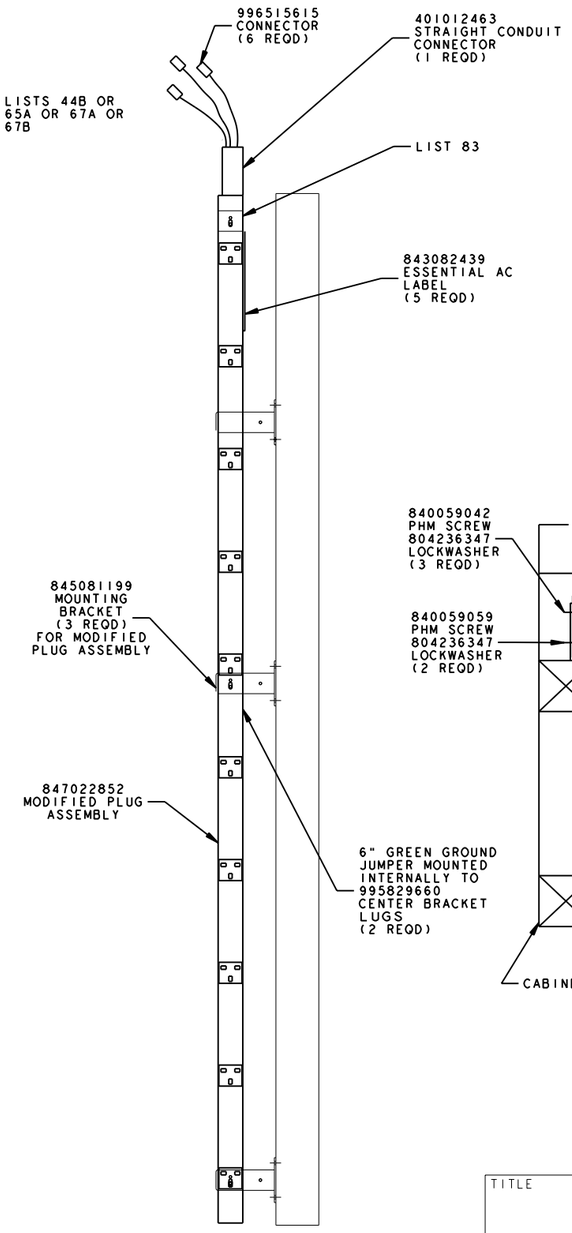

SEC B-B

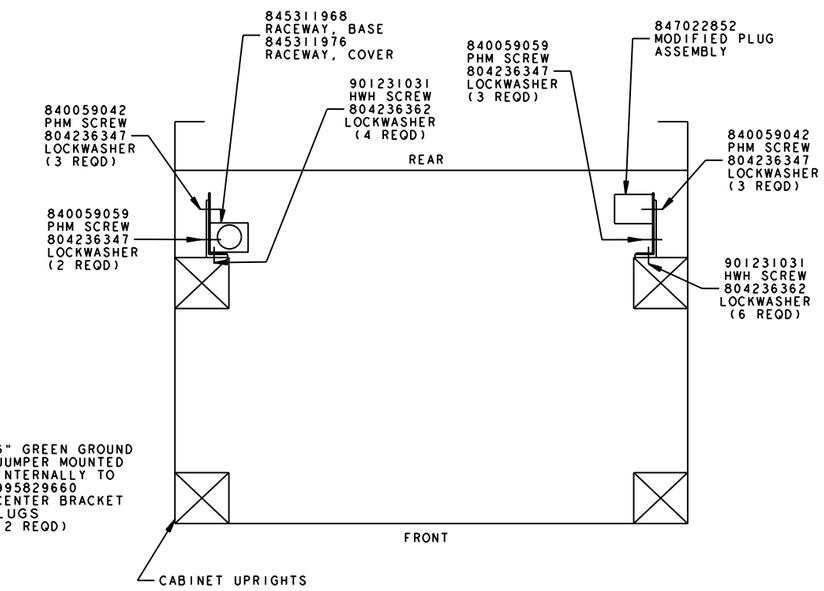

DETAIL C

FIG. W
METHOD OF MOUNTING
POWER RACEWAYS
LIST 44B OR 65A OR 67A OR 67B OR 83

J5D005C-1

TITLE
5ESS MISCELLANEOUS CABINET

THIRD ANGLE PROJECTION

LUCENT TECHNOLOGIES - PROPRIETARY
THIS DOCUMENT CONTAINS PROPRIETARY INFORMATION OF
LUCENT TECHNOLOGIES AND IS NOT TO BE DISCLOSED OR USED
EXCEPT IN ACCORDANCE WITH APPLICABLE AGREEMENTS

COPYRIGHT© 2000 LUCENT TECHNOLOGIES
UNPUBLISHED & NOT FOR PUBLICATION
ALL RIGHTS RESERVED

LUCENT TECHNOLOGIES

J5D005C-1	SHEET	ISSUE	DWG SIZE
	C16	113	C2/AIR

LU.EQPT.ISSUE-GEN.FRM NOV 1999

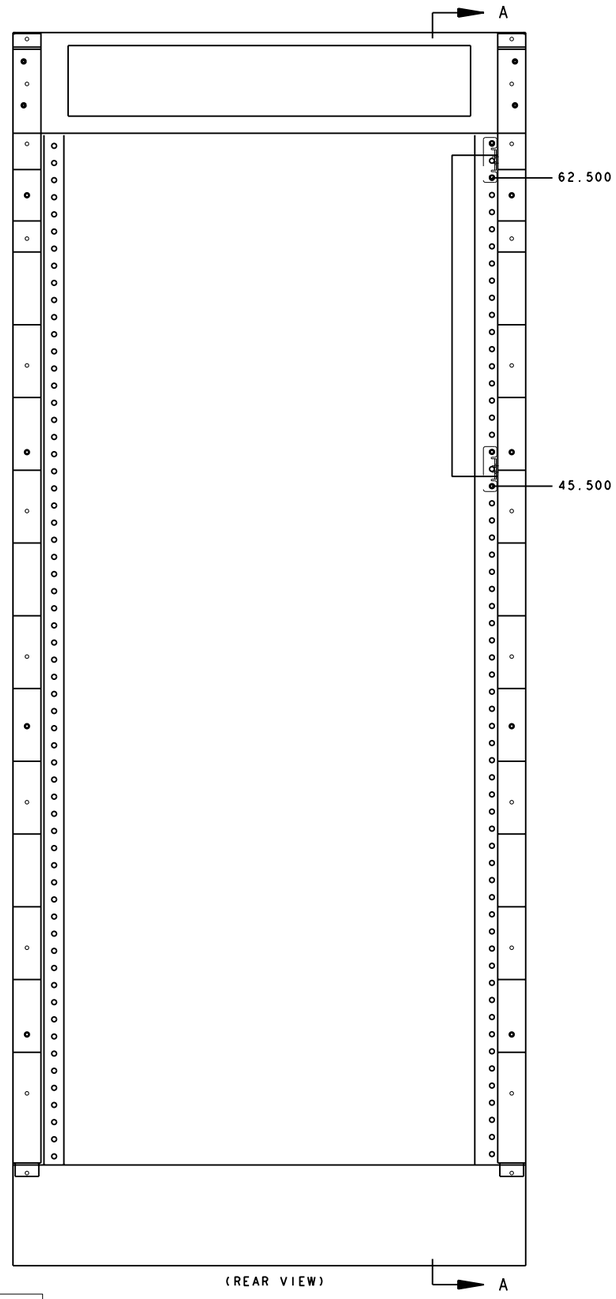

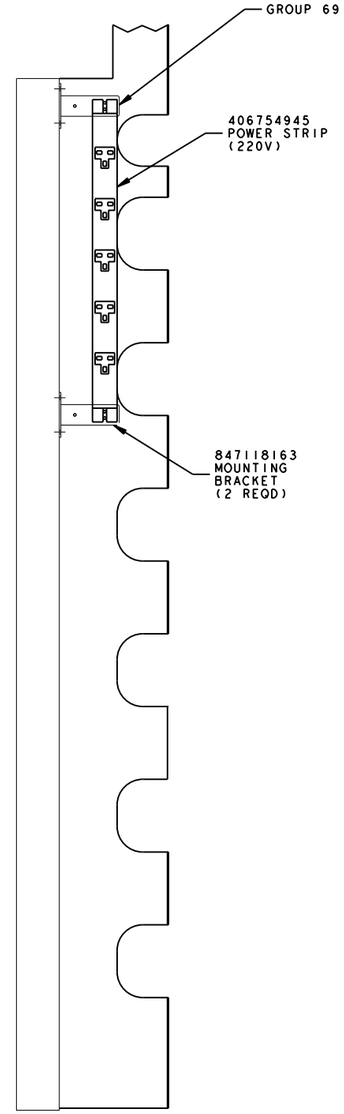

SEC A-A

FIG. X (DA)

GROUP 69

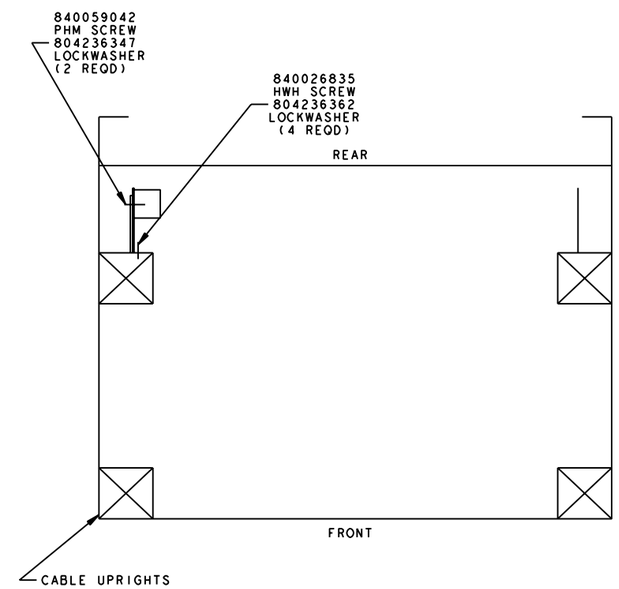

TITLE

5ESS MISCELLANEOUS CABINET

THIRD ANGLE PROJECTION

LUCENT TECHNOLOGIES - PROPRIETARY
THIS DOCUMENT CONTAINS PROPRIETARY INFORMATION OF
LUCENT TECHNOLOGIES AND IS NOT TO BE DISCLOSED OR USED
EXCEPT IN ACCORDANCE WITH APPLICABLE AGREEMENTS

COPYRIGHT© 2000 LUCENT TECHNOLOGIES
UNPUBLISHED & NOT FOR PUBLICATION
ALL RIGHTS RESERVED

LUCENT TECHNOLOGIES	J5D005C-1	SHEET	ISSUE	DWG SIZE
		C17	113	C2/AIR

J5D005C-1

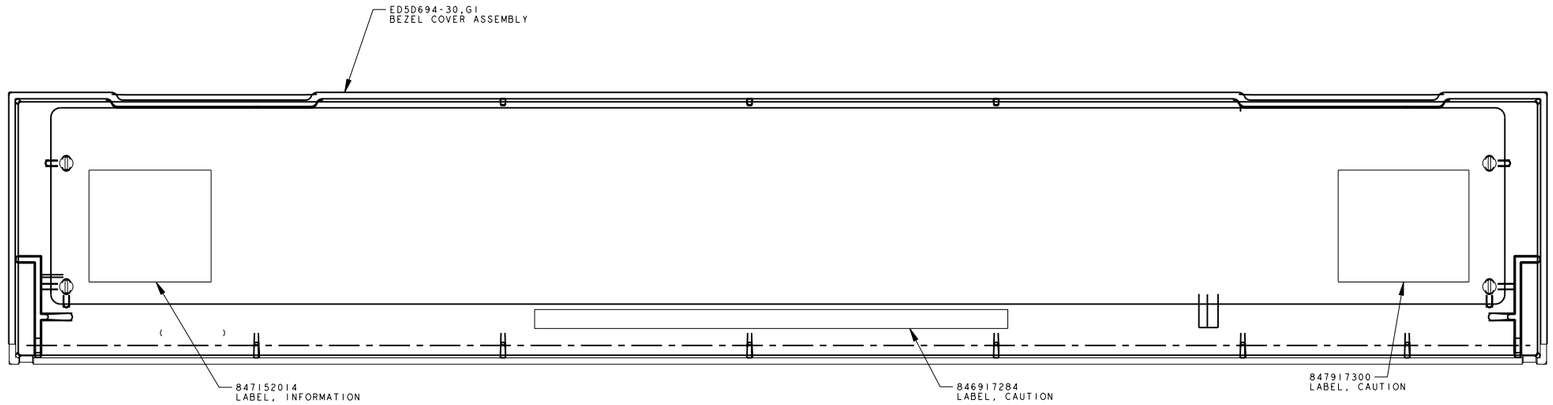

FIG. Y (DA)

FRONT BEZEL COVER
BEZEL IN MAINTENANCE (OPEN) POSITION

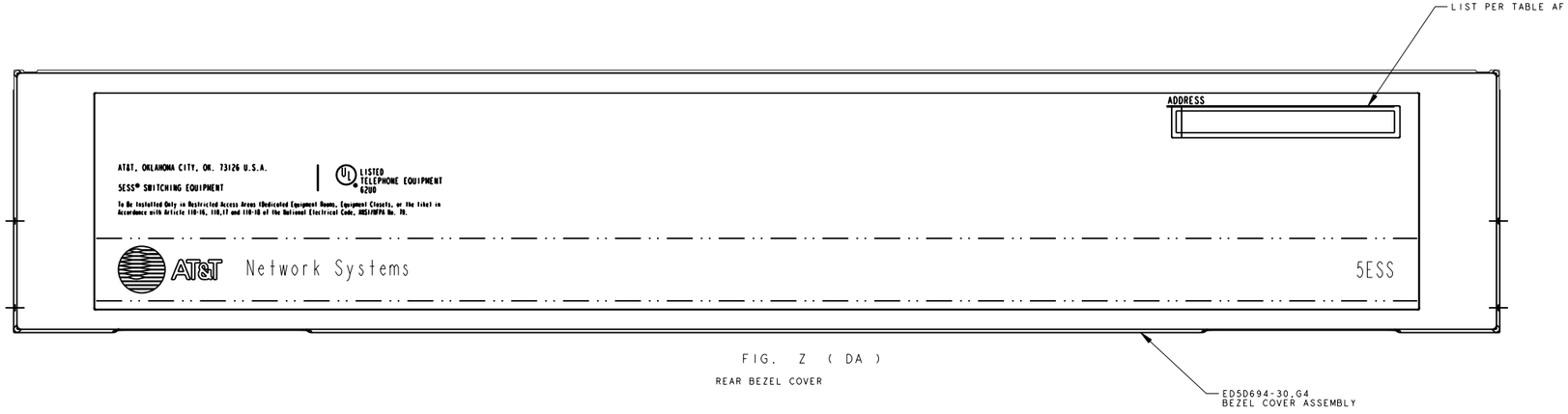

FIG. Z (DA)

REAR BEZEL COVER

TITLE				
5ESS MISCELLANEOUS CABINET				
THIRD ANGLE PROJECTION	LUCENT TECHNOLOGIES - PROPRIETARY THIS DOCUMENT CONTAINS PROPRIETARY INFORMATION OF LUCENT TECHNOLOGIES AND IS NOT TO BE DISCLOSED OR USED EXCEPT IN ACCORDANCE WITH APPLICABLE AGREEMENTS COPYRIGHT© 2000 LUCENT TECHNOLOGIES UNPUBLISHED & NOT FOR PUBLICATION ALL RIGHTS RESERVED			
LUCENT TECHNOLOGIES	J5D005C-1	SHEET C18	ISSUE 113	DWG SIZE C2/AIR

J5D005C-1

LU.EQPT.ISSUE-GEN.FRM NOV 1999

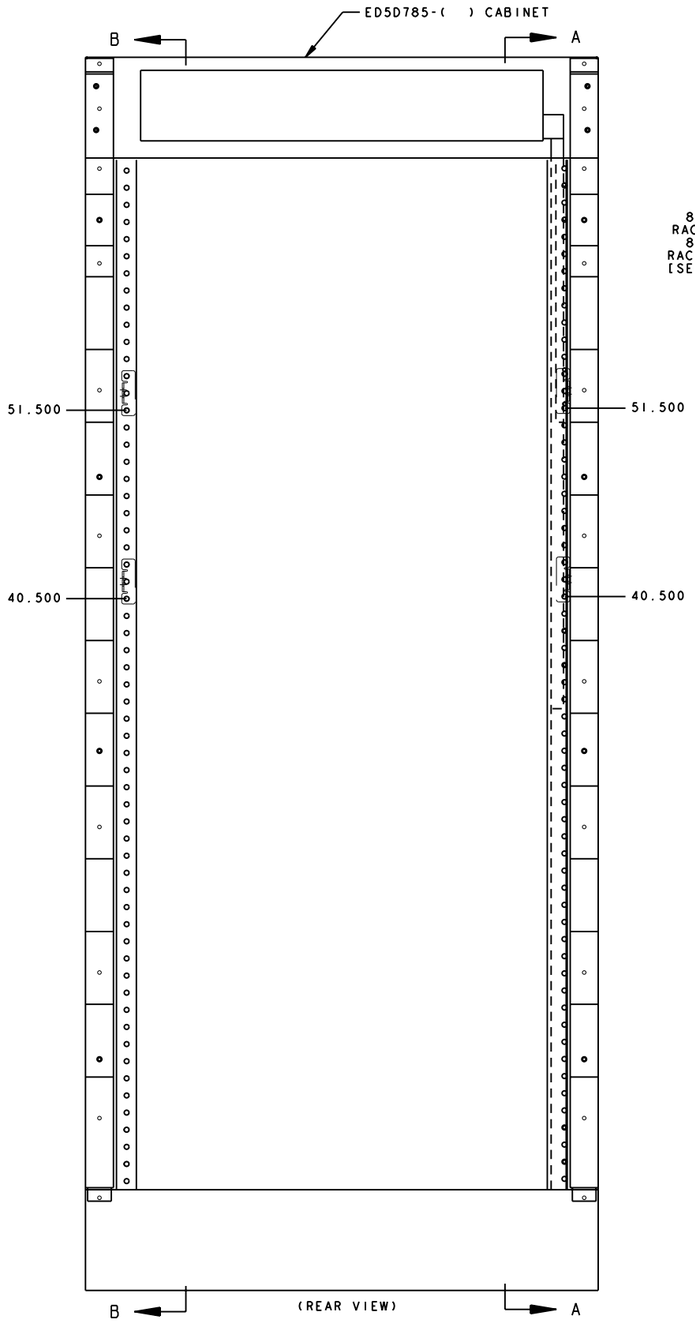

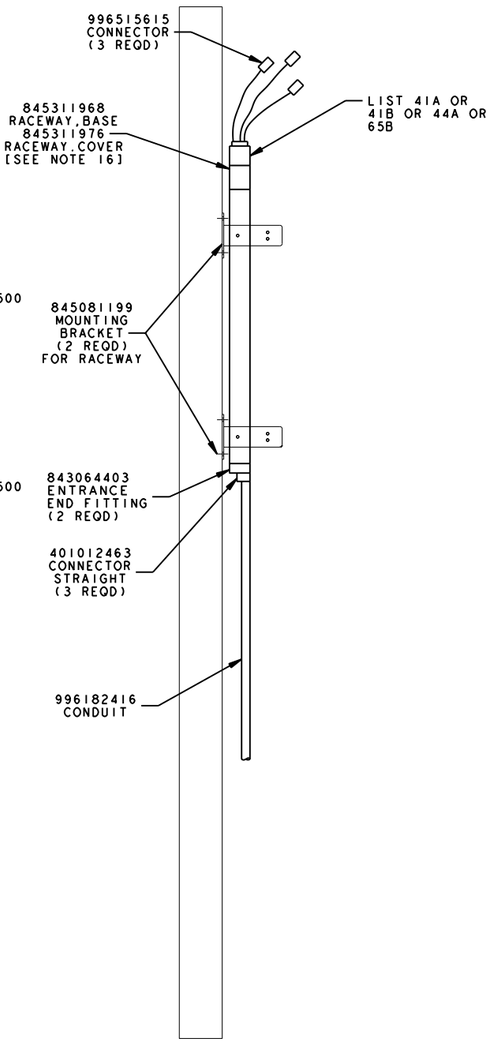

SEC A-A

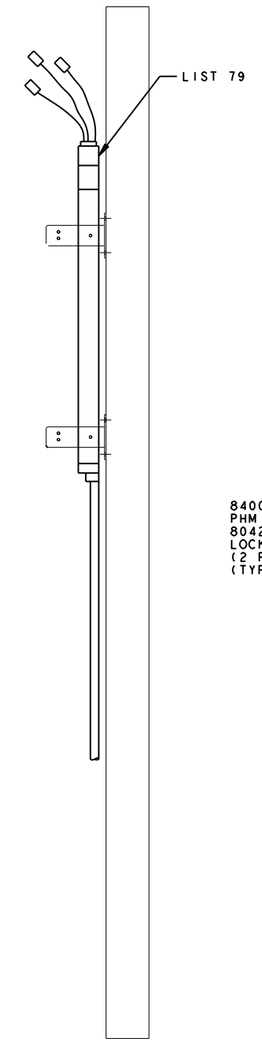

SEC B-B

OTHERWISE SAME AS
SECT. A-A

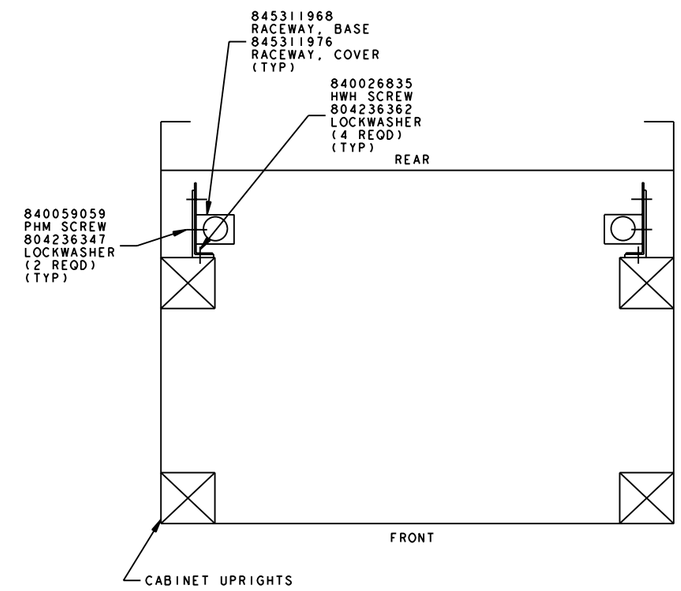

DETAIL D

FIG. AA
DA
METHOD OF MOUNTING
POWER RACEWAYS
LIST 41A OR 41B OR 44A OR 65B OR 79

J5D005C-1

TITLE
5ESS MISCELLANEOUS CABINET

THIRD ANGLE PROJECTION

LUCENT TECHNOLOGIES - PROPRIETARY
THIS DOCUMENT CONTAINS PROPRIETARY INFORMATION OF
LUCENT TECHNOLOGIES AND IS NOT TO BE DISCLOSED OR USED
EXCEPT IN ACCORDANCE WITH APPLICABLE AGREEMENTS

COPYRIGHT© 2000 LUCENT TECHNOLOGIES
UNPUBLISHED & NOT FOR PUBLICATION
ALL RIGHTS RESERVED

LUCENT TECHNOLOGIES

J5D005C-1

SHEET	ISSUE	DWG SIZE
C19	113	C2/AIR

LU_EQPT_ISSUE-GEN.FRM NOV 1999

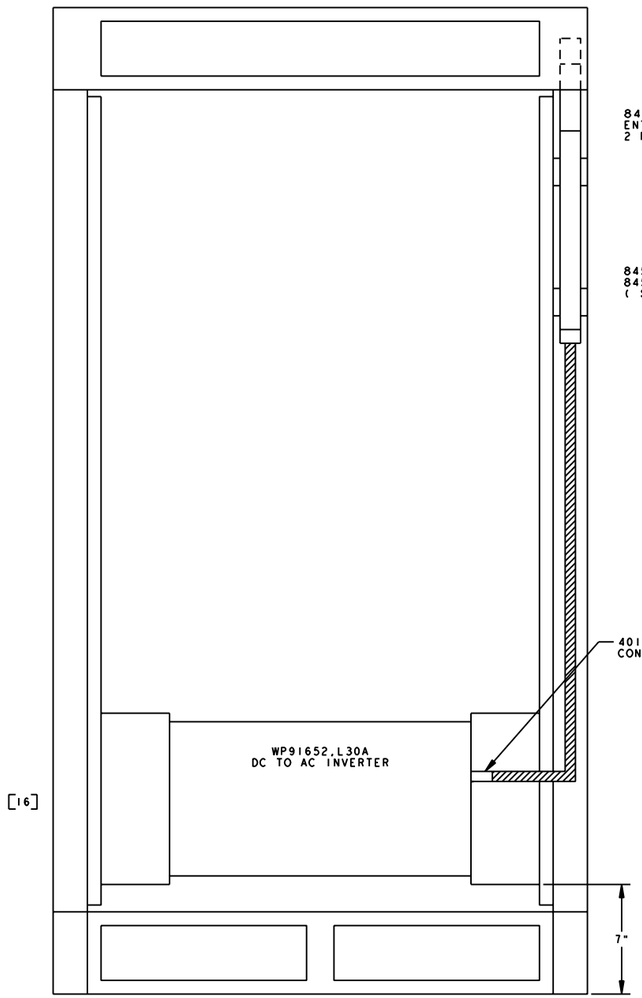

REAR VIEW

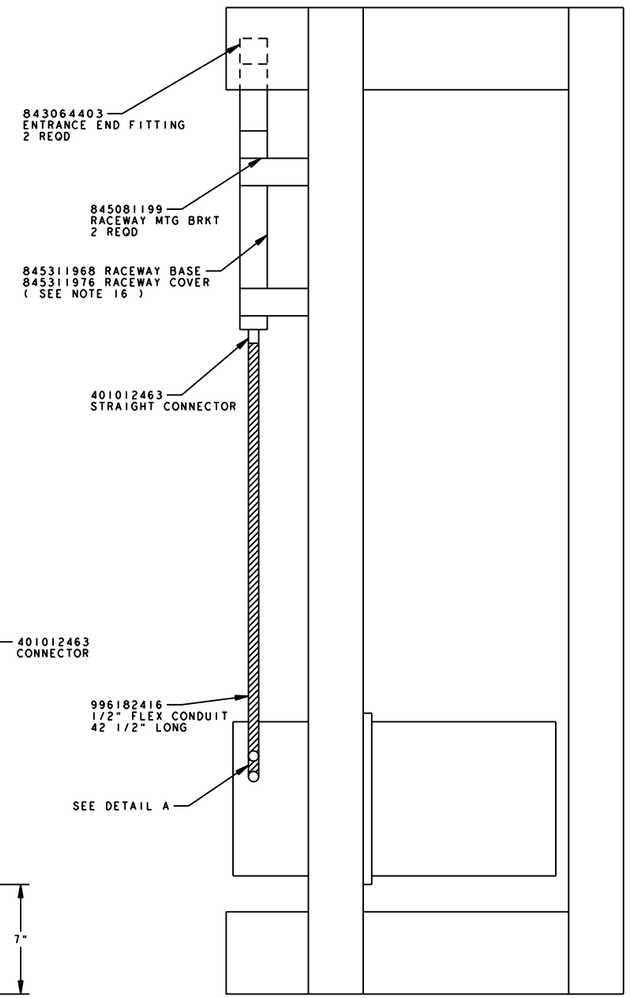

SIDE VIEW

FIG. L (DA)

LOCATION OF WIREMOLD FOR AC LEADS FROM THE INVERTER
LISTS 79

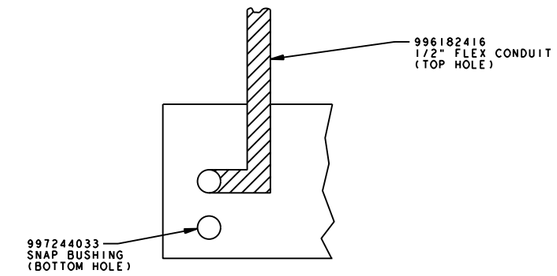

DET. A (DA)

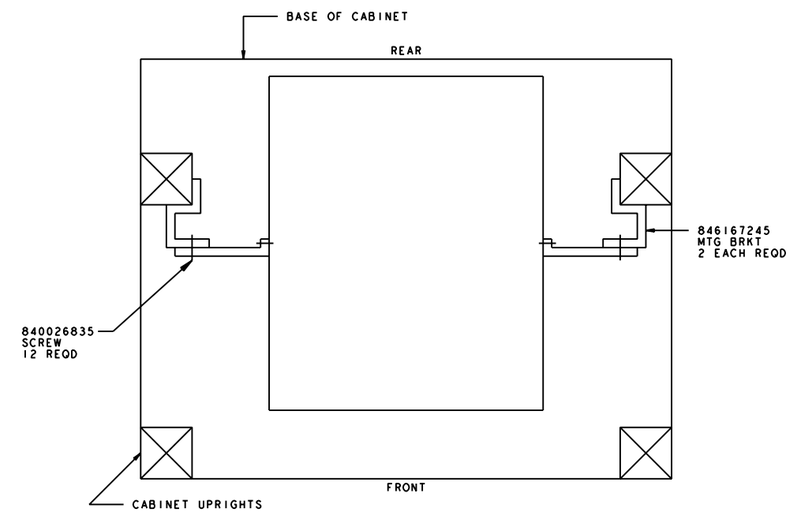

FIG. M (DA)

LOCATION OF MTG BRKTS FOR THE INVERTER

TITLE

5ESS MISCELLANEOUS CABINET

THIRD ANGLE PROJECTION

LUCENT TECHNOLOGIES - PROPRIETARY
THIS DOCUMENT CONTAINS PROPRIETARY INFORMATION OF
LUCENT TECHNOLOGIES AND IS NOT TO BE DISCLOSED OR USED
EXCEPT IN ACCORDANCE WITH APPLICABLE AGREEMENTS

COPYRIGHT© 2000 LUCENT TECHNOLOGIES
UNPUBLISHED & NOT FOR PUBLICATION
ALL RIGHTS RESERVED

LUCENT TECHNOLOGIES	J5D005C-1	SHEET	ISSUE	DWG SIZE
		C20	113	C2/AIR

J5D005C-1

LU.EOPT.ISSUE-GEN.FRM NOV 1999

MANUFACTURING NOTES

***** CONTINUED *******

```
      2ND L28    28       0    1T-4T, 7T-12T OR 1B-4B, 7B-12B
                          1    13T-16T, 19T-24T OR 13B-16B, 19B-24B
```

70D FUSES AND ASSOCIATED DESIG PINS, AND FUSE LABELS ARE TO BE JOB ASSIGNED.

X X 32. THE CABLE SUPPORT BRACKET (843049008) SHALL BE INSTALLED USING THE LOWER MOST MOUNTING POSITION ON EACH LAU(J5D003FG-1) ORDERED.

X X 33. LINK ADAPTER UNIT (LAU, J5D003FG-1) EQUIPPED ON THE API APPLICATION (LIST 35); FUSING, ASSOCIATED DESIG PINS AND FUSE LABELS ARE TO BE JOB ASSIGNED.

X X 34. ED4C674-15, GROUP 6 THRU 19 ARE REQUIRED TO CONNECT THE MODEM ELIMINATOR WITH THE LINK ADAPTER UNIT (LAU) PROVIDED IN LIST 35. THE ED4C674-15 GROUP USED ON THE STOCKLIST IS FOR ACCOUNTING PURPOSES ONLY. SEE TABLE BELOW FOR METHOD OF APPLING CABLES. (SEE FIG. K).

LIST	GROUP	FROM MODEM	TO LAU
1ST L38	G6	CKT 1	19-072
2ND L38	G7	CKT 2	19-080
3RD L38	G8	CKT 3	19-088
4TH L38	G9	CKT 4	19-096
5TH L38	G10	CKT 5	19-104
6TH L38	G11	CKT 6	19-112
7TH L38	G12	CKT 7	19-120
8TH L38	G13	CKT 8	19-128
9TH L38	G14	CKT 9	19-136
10TH L38	G15	CKT 10	19-144
11TH L38	G16	CKT 11	19-152
12TH L38	G17	CKT 12	19-160
13TH L38	G18	CKT 13	19-168
14TH L38	G19	CKT 14	19-176.

X X 35. $FOR ACCOUNTING PURPOSES ONLY, WIRING FOR THE LAU MOUNTED IN POSITION 19 IS SHOWN. FOR LAU'S MOUNTED IN POSITION 28, USE ED5D505-15, G12 & G13.$

X X 36. CABINET EQL POSTIONS SHALL ONLY BE STAMPED FOR UNITS MOUNTED IN THE SHOP. FIELD MOUNTED UNITS SHALL HAVE EQL POSITIONS STAMPED BY THE INSTALLER.

X X 37. WHEN MOUNTING A POWER DISTRIBUTION CONTROL PANEL COVER IN A MISCELLANEOUS CABINET, THE COVER MUST BE MOUNTED NO HIGHER THAN 2 INCHES ABOVE THE PDCP.

X 38. WHEN MOUNTING A SINGLE TRCU UNIT IN THE MISCELLANEOUS CABINET TWO (2) LIST BE'S ARE REQUIRED. THE CABLE SUPPORTS SHOULD BE MOUNTED AT THE TOP AND BOTTOM EDGE OF THE UNIT. EACH ADDITIONAL TRCU UNIT MOUNTED ABOVE THE FIRST TRCU REQUIRES ONE (1) LIST BE. THE CABLE SUPPORT SHALL BE MOUNTED AT THE TOP EDGE OF THE UNIT. WHEN MOUNTING A TRCU IN THE TOP POSITION IN THE 5ESS2000 CABINET NO (0) LIST BE'S ARE REQUIRED.

X X 39. THE CABINET DESIGNATION LABELS ARE TO BE JOB ENGINEERED, THE GROUP NO IS TO BE ASSIGNED USING TABLE AF. THE GROUP NO USED ON THE STOCKLIST IS FOR ACCOUNTING PURPOSES ONLY.

X X 40. THE COMCODES SHOWN IN THE STOCKLIST IDENTIFICATION FIELD REFERENCE BY THIS NOTE ARE NOT THE INDIVIDUAL OR SINGULAR COMCODE FOR THE PART DESCRIBED BUT ARE THE FACTORY'S ORDERING COMCODE. NOTE 151 CONTAINS THE FACTORY'S ORDERING COMCODE FOR THE DESCRIBED PART AND THE EQUIVLENT SINGULAR/INDIVIDUAL COMCODE THAT MAY BE REQUIRED BY AN INSTALLER, CUSTOMER, REGIONAL LINE ENGINEER, OR A CLASS A CHANGE NOTICE.

X X 41. WHEN MOUNTING A SECOND INVERTOR IN A SINGLE MISCELLANEOUS CABINET (LIST 44), THE OFFICE ALARM SCAN POINTS ARE TO BE WIRED PER ED5D500-15, FIG 10, SHEETS C86 & C86A.

X X 42. MFFU TYPE FUSE TO BE EQUIPPED:

LIST	FUSE POS
1ST 17A	050A,050C
	050B,050D
2ND 17A	141A,141C
	141B,141D
3RD 17A	014A,014C
	014B,014D
W/O L7A	
4TH L17A	177A,177C
	177B,177D
OR	
3RD L17A	
WITH L7A	
1ST L7A	014A
2ND L7A	177C
3RD L7A	118A
4TH L7A	073C

---------- CONTINUED ON NEXT SHEET ----------

MANUFACTURING NOTES

***** CONTINUED *******

UNIT IS NOT EQUIPPED.

X X 20. FUSE LABELS SHALL BE AFFIXED TO AN 843084104 PANEL THAT IS FASTENED TO THE REAR OF THE BEZEL LOCATED AT THE TOP FRONT OF 6'-0 CABINETS. LABELS SHALL BE PLACED SO THEY ARE READABLE WITH BEZEL IN THE OPEN POSITION.

X X 21. CONNECTED PER FRAME LOOSE WIRING.

X X 22. WHEN JUNCTIONING SIX FOOT HIGH CABINETS TOGETHER, THE LEVEL OF EACH CABINET WITH REGARD TO THE ADJACENT CABINET SHALL BE DETERMINED AT THE TOP SURFACE OF THE CABINETS AND NOT THE BOTTOM. WHEN JUNCTIONING THE CABINETS TOGETHER IN BLOCKS OF TWO, THREE OR FOUR CABINETS, THE QUANTITY OF SPACERS REQUIRED BETWEEN CABINETS WILL VARY ACCORDING TO THE DIMENSIONS OF THE CABINETS. EACH BLOCK OF CABINETS SHALL BE MEASURED AND THE APPROPRIATE QUANTITIES OF 843082470 SPACERS SHALL BE ADDED BETWEEN CABINETS TO ACHIEVE THE FOLLOWING DIMENSIONS:
TWO CABINETS 59-7/8",+1/16",-0.
THREE CABINETS 89-7/8",+1/16",-0.
FOUR CABINETS 119-7/8",+1/16",-0.

X 23. TERMINALS, LUGS AND SLEEVES APPLIED PER FRAME LOOSE WIRING.

X X 24. REFER TO TABLE AB FOR FUSE POSITIONS AND ASSIGNMENTS.

X X 25. THE CABINET DESIGNATION LABELS ARE TO BE JOB ENGINEERED, THE COMCODES ARE TO BE ASSIGNED USING TABLE AC. THE COMCODE USED ON THE STOCKLIST IS FOR ACCOUNTING PURPOSES ONLY.

X X 26. ED8C010-50 OR 105389548 SHOULD BE INSTALLED A MINIMUM OF 18 1/2 INCHES UP FROM THE FLOOR TO THE BASE OF THE UNIT.

27. 70 TYPE FUSES AND ASSOCIATED DESIG PINS TO BE EQUIPPED:

LIST	FUSE POS
1ST L24,24A,24B,L25D OR L40,40A	68-9T,16T
2ND L24,24A,24B,L25D OR L40,40A	68-10T,15T
3RD L24,24A,24B,L25D OR L40,40A	68-11T,14T
4TH L24,24A,24B,L25D OR L40,40A	68-9B,16B
5TH L24,24A,24B,L25D OR L40,40A	68-10B,15B
6TH L24,24A,24B,L25D OR L40,40A	68-11B,14B
1ST L25,25A,25B,OR L25F	68-3T,19T
2ND L25,25A,25B,OR L25F	68-3B,20B
3RD L25,25A,25B,OR L25F	68-4B,21T
4TH L25,25A,25B,OR L25F	68-5B,22T
5TH L25,25A,25B,OR L25F	68-6B,22B
6TH L25,25A,25B,OR L25F	68-6T,21B
W/O L5 & L8,L8A.	

28. LABELS FOR LISTS 24,24A,24B,25,25A,25B OR 40,40A TO BE EQUIPPED:

LABEL	FUSE	LIST
ED5D088-10	9T	1ST L24,24A,24B OR L25D,40,40A
G189/G315	10T	2ND L24,24A,24B OR L25D,40,40A
	11T	3RD L24,24A,24B OR L25D,40,40A
	9B	4TH L24,24A,24B OR L25D,40,40A
	10B	5TH L24,24A,24B OR L25D,40,40A
	11B	6TH L24,24A,24B OR L25D,40,40A
ED5D088-10	16T	1ST L24,24A,24B OR L25D,40,40A
G190/G316	15T	2ND L24,24A,24B OR L25D,40,40A
	14T	3RD L24,24A,24B OR L25D,40,40A
	16B	4TH L24,24A,24B OR L25D,40,40A
	15B	5TH L24,24A,24B OR L25D,40,40A
	14B	6TH L24,24A,24B OR L25D,40,40A
ED5D088-10	3T	1ST L25,25A,25B,OR L25F
G191	3B	2ND L25,25A,25B,OR L25F
	4B	3RD L25,25A,25B,OR L25F
	5B	4TH L25,25A,25B,OR L25F
	6B	5TH L25,25A,25B,OR L25F
	6T	6TH L25,25A,25B,OR L25F W/O L5 & L8,L8A
ED5D088-10	19T	1ST L25,25A,25B,OR L25F
G192	20B	2ND L25,25A,25B,OR L25F
	21T	3RD L25,25A,25B,OR L25F
	22T	4TH L25,25A,25B,OR L25F
	22B	5TH L25,25A,25B,OR L25F
	21B	6TH L25,25A,25B,OR L25F W/O L5 & L8,L8A

X 29. THE STAMP FOR VERTICAL EQL 69 ON THE FRONT (APPARATUS SIDE) OF THE CABINET SHALL BE MOVED TO THE LEFT OF THE ESD LABEL. YOU SHALL STAMP EQL 69 ON THE DOOR FRAME. STAMPING ON REAR (WIRING SIDE) WILL NOT CHANGE.

X X 30. SEE TABLE AD FOR FUSES, DESIG. PINS AND LABELS FOR THE 14A RECORDED ANNOUNCEMENT UNITS.

X X 31. LINK ADAPTER UNITS (LAU, J5D003FG-1) TO BE EQUIPPED: (TWO FUSES ON BUS 0 AND TWO FUSES ON BUS 1).

LIST	VERT EQL	BUS	POSSIBLE FUSE POSITIONS
1ST L28	19	0	1T-4T, 7T-12T OR 1B-4B, 7B-12B
		1	13T-16T, 19T-24T OR 13B-16B, 19B-24B

------ CONTINUED TO THE LEFT ------

MANUFACTURING NOTES

1. X PARTS REQUIRED FOR INSTALLATION.

X/ PARTS REQUIRED FOR MANUFACTURE WHEN EQUIPMENT IS SHOP MOUNTED OR BY THE INSTALLER WHEN THE EQUIPMENT IS TO BE FIELD MOUNTED.

* PARTS THAT ARE TO BE SHIPPED ATTACHED TO OR ENCLOSED IN THE SAME CONTAINER WITH THE ASSOCIATED ASSEMBLED ITEM.

*/ PARTS (A) REQUIRED FOR MANUFACTURE WHEN EQUIPMENT INVOLVED IS SHOP MOUNTED OR (B) TO BE SHIPPED ATTACHED TO, OR ENCLOSED IN THE SAME CONTAINER WITH THE ASSOCIATED ASSEMBLED ITEM WHEN FIELD MOUNTED.

( ) INDICATES DESIGNATIONS TO BE STAMPED IN ACCORDANCE WITH JOB INFORMATION.

{ } INDICATES DESIGNATIONS SHOWN FOR INFORMATION ONLY AND ARE NOT TO BE STAMPED.

< > INDICATES DESIGNATIONS AND/OR INFORMATION PROVIDED IN ACCORDANCE WITH OTHER INFORMATION.

"W" PARTS ASSEMBLED AT THE SAME TIME THE EQUIPMENT IS MOUNTED.

"W*" PARTS TO BE (A) SHOP ASSEMBLED, BUT WHICH CANNOT BE ASSEMBLED UNTIL THE ASSOCIATED EQUIPMENT IS BEING MOUNTED, OR (B) SHIPPED ATTACHED TO, OR ENCLOSED IN THE SAME CONTAINER WITH THE ASSOCIATED EQUIPMENT WHEN FIELD MOUNTED.

"S" PARTS NOT ASSEMBLED, SHIPPED SEPARATELY.

A/R AS REQUIRED.

"B" PARTIAL ASSEMBLIES ON OTHER DRAWINGS WITH STOCKLISTS.

12. UNASSIGNED.

X 13. REMOVE THE STRAP FROM TB1, TERMINAL 1 TO FRAME GROUND BEFORE WIRING KS-20816, L1,A INVERTER INTO FRAME.

14. REMOVE AND DISCARD THE TWO P-42P270 MTG BARS, FOUR 840047542 PHST SCREWS, AND FOUR P-353501 RHM SCREWS FURNISHED WITH THE J1A042BP-1 DIAL TONE DELAY ALARM UNIT AND MOUNT UNIT WITH EIGHT 840026835 HWHST SCREWS.

15. LOCATE THE TWO 70H FUSES AND ASSOCIATED KS-14174,L8 (BR) DESIGNATION PINS FURNISHED WITH THE J3H001EF-1 DISTRIBUTE POINT APPLIQUE UNIT, ON THE MISCELLANEOUS FRAME FUSE PANEL AT FUSE POSITIONS: 68-2B & 20T.

16. RACEWAY BASE 843064411 IS FURNISHED WITH RANDOM LOCATED MTG HOLES. IF THESE RANDOM LOCATED MTG HOLES DO NOT ALIGN WITH THE MTG HOLES OF THE ENTRANCE END FITTING 843064403 OR THE BRACKET 843064395 THE SHOP SHALL DRILL FOUR .190 PLUS OR MINUS .008 HOLE(S) IN THE RACEWAY BASE.

17. $REMOVE AND DISCARD THE 2-1/2 INCH (63.5 MM) BUSHING FURNISHED WITH THE DC TO AC INVERTER (KS-20816).$

X X 18. 70C FUSES AND ASSOCIATED DESIG PINS TO BE EQUIPPED:

LIST	FUSE POS
1ST L3	68-7T,8T
OR 17	68-7B,8B
2ND L3	68-17T,18T
OR 17	68-17B,18B
3RD L3	68-1T,2T
OR 17	68-1B,2B
W/O L7	
4TH L3	68-23T,24T
OR 17	68-23B,24B
OR	
3RD L3	
OR 17	
WITH L7	
1ST L7	68-1T
2ND L7	68-24T
3RD L7	68-13T
4TH L7	68-12T.

X X 19. FAN UNIT ALARM LED ARM OF FAN/FUSE ALARM BEZEL CABLE SHALL BE TIED BACK TO THE CABLE SUPPORT BAR OR CABINET UPRIGHT IF A FAN

------ CONTINUED TO THE LEFT ------

COPYRIGHT @ 2001 LUCENT TECHNOLOGIES
ALL RIGHTS RESERVED

BT13

5ESS SWITCHING EQUIPMENT
SPECIFICATION FOR
MISCELLANEOUS CABINET

DWG SIZE C2 | ISSUE 117

LUCENT TECHNOLOGIES INC | J5D005C-1 | SHEET D1 OF 86

PRINTED IN U.S.A.

MANUFACTURING NOTES

***** CONTINUED *******

IDENTIFICATION PURPOSES. THE REMAINING LABELS ARE TO BE BAGGED AND ATTACHED TO THE CABINET FOR FIELD APPLICATION TO THE FRONT AND REAR INDICATIOR STRIPS.

SHOP INST

X 50. TWO HOLES NEED TO BE DRILLED INTO THE INVERTER BRACKET TO PROVIDE ADEQUATE SUPPORT. HOLES SHOULD BE DRILLED IN LINE WITH THE EXISTING HOLES WITH THE FIRST HOLE 3/4 OF AN INCH FROM THE TOP AND THE SECOND HOLE 11 3/4 INCHES FROM THE TOP. THE HOLE SIZE SHOULD BE 9/32 OF AN INCH.

101. LABELS FOR LISTS 40B TO BE EQUIPPED:

LABEL	FUSE	LIST
ED5D088-10	059A	1ST L40B
G583	059C	2ND L40B
	073A	3RD L40B
	059B	4TH L40B
	059D	5TH L40B
	073B	6TH L40B
ED5D088-10	127C	1ST L40B
G584	127A	2ND L40B
	118C	3RD L40B
	127D	4TH L40B
	127B	5TH L40B
	118D	6TH L40B

X 102. WHEN LIST 84 OR 85 IS PROVIDED, THE TOP RIGHT VERTICAL CABLE TIE BAR (847312097) MUST BE REMOVED TO PROVIDE ROOM FOR MOUNTING THE ELECTRICAL BOX. WHEN LIST 79A IS PROVIDED, THE TOP LEFT VERTICAL CABLE TIE BAR MUST BE REMOVED.

X 103. MOUNT THE CABLE SUPPORT ON THE UPPER UNIT MOUNTING SCREWS.

X X 104. THE IP-DSU IS FACTORY CONFIGURED FOR 115V AC USAGE AND MUST BE RECONFIGURED FOR -48V DC USAGE. TO RECONFIGURE THE IP-DSU FOR -48V DC USAGE REMOVE THE TOP COVER, RELOCATE THE JUMPER CONNECTOR ON THE SYSTEM BOARD TO THE -48V DC POSITION, AND REPLACE THE COVER.

X X 105. THE IP-DSU CABINET EQL IS LINE ENGINEERED PER INDIVIDUAL APPLICATION AND REQUIRES THAT THE -48V DC 16GA POWER CABLE BE CUT TO LENGTH AND STRIPPED OF INSULATION APPROXIMATELY 3/8" BACK FROM THE IP-DSU END.

X X 106. EACH IP-DSU REQUIRES A UNIQUE SET OF MFFU AND UNIT LABELS. EACH LIST 101 PROVIDES TWELVE POSSIBLE CONFIGURATIONS OF THESE LABELS FOR THE CUSTOMERS APPLICATION. MANUFACTURING WILL BAG THESE LABELS AND ATTACH THE BAG TO THE SHELF FOR FIELD INSTALLATION.

MANUFACTURING NOTES

***** CONTINUED *******

SHOP INST

43. MFFU TYPE FUSE TO BE EQUIPPED:

LIST	FUSE POS
1ST L24C OR L25K OR 40B	059A,127C
2ND L24C OR L25K OR 40B	059C,127A
3RD L24C OR L25K OR 40B	073A,118C
4TH L24C OR L25K OR 40B	059B,127D
5TH L24C OR L25K OR 40B	059D,127B
6TH L24C OR L25K OR 40B	073B,118D
1ST L25C OR L25G	023A,159A
2ND L25C OR L25G	023B,159D
3RD L25C OR L25G	023D,168A
4TH L25C OR L25G	032B,168C
5TH L25C OR L25G	032D,168D
6TH L25C OR L25G	032C,168B
W/O L5A & L8A	

44. LABELS FOR LISTS 24C,25C OR 40B TO BE EQUIPPED:

LABEL	FUSE	LIST
ED5D088-10	059A	1ST L24C
G425	059C	2ND L24C
	073A	3RD L24C
	059B	4TH L24C
	059D	5TH L24C
	073B	6TH L24C
ED5D088-10	127C	1ST L24C
G426	127A	2ND L24C
	118C	3RD L24C
	127D	4TH L24C
	127B	5TH L24C
	118D	6TH L24C
ED5D088-10	023A	1ST L25C
G427	023B	2ND L25C
	023D	3RD L25C
	032B	4TH L25C
	032D	5TH L25C
	032C	6TH L25C W/O L5A & L8A
ED5D088-10	159A	1ST L25C
G428	159D	2ND L25C
	168A	3RD L25C
	168C	4TH L25C
	168D	5TH L25C
	168B	6TH L25C W/O L5A & L8A

X X 45. LINK ADAPTER UNITS (LAU, J5D003FG-1) TO BE EQUIPPED:
(TWO FUSES ON BUS 0 AND TWO FUSES ON BUS 1).

LIST	VERT EQL	BUS	POSSIBLE FUSE POSITIONS
1ST L28A	19	0	014A,014C,023A,023C; 050A,050C,059A,059C,073A,073C OR 014B,014D,023B,023D; 050B,050D,059B,059D,073B,073D
		1	118A,118C,127A,127C; 159A,159C,168A,168C,177A,177C OR 118B,118D,127B,127D; 159B,159D,168B,168D,177B,177D
2ND L28A	28	0	014A,014C,023A,023C; 050A,050C,059A,059C,073A,073C OR 014B,014D,023B,023D; 050B,050D,059B,059D,073B,073D
		1	118A,118C,127A,127C; 159A,159C,168A,168C,177A,177C OR 118B,118D,127B,127D; 159B,159D,168B,168D,177B,177D

MFFU TYPE FUSE AND FUSE LABELS ARE TO BE JOB ASSIGNED.

X X 46. THIS LENGTH IS FOR FORECASTING AND ACCOUTING PURPOSES. CONDUIT AND WIRE LENGTH MAY BE ADJUSTED AS REQUIRED. STRIP 5/16 IN. INSULATION ON WIRES IN ELECTRICAL BOX AND ATTACH BUTT SPLICE, THOMAS & BETTS #RCC-21 OR EQUIVALENT. INVERTER END OF WIRES ARE TO BE COILED INSIDE INVERTER CONNECTOR COVER.

X X 47. CUT WIRE TO 6 IN,STRIP 5/16 IN BOTH ENDS AND LUG WITH RING LUG 995829660 OR EQUIVALENT. TO BE MOUNTED INTERNALLY BETWEEN SCREW AT CENTER MOUNING BRACKET AND PHILLIPS HEAD SCREW OF MODIFIED PLUG ASSEMBLY 847022852.

X 48. MFFU DUMMY FUSES ARE TO BE REPLACED WITH MFFU FUSES WHEN EQUIPPING FUSE POSITIONS.

X X 49. ATTACH ONE LABEL TO THE TOP-MIDDLE OF THE REAR OF THE CABINET FOR

------ CONTINUED TO THE LEFT ------

COPYRIGHT @ 2001 LUCENT TECHNOLOGIES
ALL RIGHTS RESERVED

BT13

5ESS SWITCHING EQUIPMENT
SPECIFICATION FOR
MISCELLANEOUS CABINET

DWG SIZE C2 | ISSUE 117

LUCENT TECHNOLOGIES INC | J5D005C-1 | SHEET D2 OF 86

PRINTED IN U.S.A.

STOCKLIST

ITEM NBR	LIST GROUP CODE	QTY PER CODE	PRODUCT IDENTIFIER	CODE	DESCRIPTION	REFERENCE POSITION	NOTE SYM	NOTE NBR
1000	1 10	1	ED5D184-70,G2, G2		ASSEMBLY, CABINET			
1001	K	OMIT 1	ED5D184-70,G2		ASSEMBLY, CABINET			
1002	K	1	ED5D184-70,G5		ASSEMBLY, CABINET			
1010	1,1A,10, 10A	2	843079633		BRACKET,MOUNTING			
1011	1,1A,10, 10A	OMIT 2	843079633		BRACKET,MOUNTING			
1012	1,1A,1B, 10,10A	2	846167237		BRACKET,MOUNTING			
1013	1,1A,1B, 10,10A	2	846167245		BRACKET,MOUNTING			
1015	41B,42A, 42B,42C, 42D,42E, 42F,65B	OMIT 2	846167237		BRACKET,MOUNTING			
1020	1	2	J5D003AU-1,L1		UNIT, FUSE/FILTER			
1025	1	2	J5D003AU-1,LWH		UNIT, FUSE/FILTER			
1030	1	1	J5D003AU-1,LSA		UNIT, FUSE/FILTER			
1040	2,21	1	402727317	KS20816L1A	INVERTER DC TO AC			
1041	2	1	ED5D621-20,G20		ASSEMBLY, CABLE			
1050	2,21	2	843079641		BRACKET,RACEWAY MOUNTING			
1051	2,21,41, 41A,41B, 44,44A, 65B	2	845081199		BRACKET,MOUNTING RACEWAY			
1060	41,44	1	405686783	WP91652L20	INVERTER DC-AC			
1061	41A,44A	1	407106814	WP91652L20A	INVERTER			
1062	41B,44B, 65B,67B	1	407608660	WP93388L10	INVERTER,DIRECT CURRENT			
1063	41B,44B, 65B,67B	1	407608728	WP93388L12	BRACKET,MOUNTING SQUARE D COMPANY			
1070	2,21,41, 41A,41B, 44,44A, 65B	2	843064403		FITTING,END ENTRANCE			
1080	2,21	1	843064411		BASE,RACEWAY			
1082	T	OMIT 1	843064411		BASE,RACEWAY			
1084	41,41A, 41B,44, 44A,65B, T	1	845311968		BASE,RACEWAY			
1090	2,21	1	843064429		COVER,RACEWAY			
1092	T	OMIT 1	843064429		COVER,RACEWAY			
1094	41,41A, 41B,44, 44A,65B, T	1	845311976		COVER,RACEWAY			
1100	2,21,41, 41A,41B, 44,44A, 65B	3	401012463	KS20785L33	CONNECTOR,STRAIGHT			
1102	T	OMIT 1	401012463	KS20785L33	CONNECTOR,STRAIGHT			
1104	T	1	401012604	KS20785L83	CONNECTOR,90 DEGREE			
1110	1	1	J5D003AU-1,LSB		UNIT, FUSE/FILTER			
1120	2,21	1	402364947		CONDUIT FLEX 1/2 IN X 12 IN ELECTRIC SUPPLY CO OR EQUIVALENT			

******** STOCKLIST CONTINUED AT RIGHT *********

STOCKLIST

ITEM NBR	LIST GROUP CODE	QTY PER CODE	PRODUCT IDENTIFIER	CODE	DESCRIPTION	REFERENCE POSITION	NOTE SYM	NOTE NBR
1122	T	OMIT 1	402364947		CONDUIT FLEX 1/2 IN X 12 IN ELECTRIC SUPPLY CO OR EQUIVALENT			
1124	T	1	996182416		CONDUIT FLEX-ROUND STEEL 1/2 INCH NATIONAL 17 INCHES LONG OR EQUIVALENT			
1125	41,41A, 41B,44, 44A,65B	1	996182416		CONDUIT FLEX-ROUND STEEL 1/2 INCH NATIONAL 42.5 INCHES LONG OR EQUIVALENT			
1130	2,21	2	402771786		COVER FOR ROUND BOX #54C6 STEEL CITY PRODUCTS CO. OR EQUIVALENT			
1135	41,41A, 41B,44, 44A,44B, 65B,67B	1	997244033		BUSHING,SNAP #SB-875-11 HEYMAN MFG CO			
1140	3	1	J5D005AA-1,L1		UNIT, RESISTOR NETWORK			
1145	17 17A	1	J5D005AA-1,L2, L2		UNIT, RESISTOR NETWORK			
1146	17A	1	J5D005AA-1,L2A, L500A,LF6		UNIT, RESISTOR NETWORK			
1150	4 22 22A	1	J5D005AB-1,L1, L1, L1		UNIT, CONVERTER			
1151	23 23A	1	J5D005AB-1,L2, L2		UNIT, CONVERTER			
1152	22A	1	J5D005AB-1,L500		UNIT, CONVERTER			
1160	4 23 23A	1	J1A042BP-1,L1, LA,LB, L1,LA,LB, L1,LA,LB		UNIT, DIAL TONE DELAY ALARM			14
1170	4 23 23A	1	J3H001EF-1,L1, L1, L1		UNIT, DISTRIBUTE POINT APPLIQUE			15
1180	5 5A 8 9 9A 9B	1	J5D005AD-1,L1, L1, L1, L1, L1, L1		UNIT, OFFICE ALARM			
1181	BJ BK BL	1	J5D005AD-1,LB, LB, LB		UNIT, OFFICE ALARM			
1182	5B 9C	1	J5D005AD-1,L1A, L1A		UNIT, OFFICE ALARM			
1183	5C	1	J5D005AD-1,L1B		UNIT, OFFICE ALARM			
1184	5C	1	J5D005AD-1,L1C		UNIT, OFFICE ALARM			
1185	5D	1	ED5D734-14,G21		CABLE, MFFU POWER & ALARM		*/	19
1195	6	1	J5D005CA-1,L1		UNIT, INDUCTOR			

STOCKLIST CONTINUED ON SHEET D4

COPYRIGHT @ 2001 LUCENT TECHNOLOGIES
ALL RIGHTS RESERVED

BT13

5ESS SWITCHING EQUIPMENT
SPECIFICATION FOR
MISCELLANEOUS CABINET

DWG SIZE C2 | ISSUE 117

LUCENT TECHNOLOGIES INC | J5D005C-1 | SHEET D3 OF 86

PRINTED IN U.S.A.

STOCKLIST

ITEM NBR	LIST GROUP CODE	QTY PER CODE	PRODUCT IDENTIFIER	CODE	DESCRIPTION	REFERENCE POSITION	NOTE SYM	NOTE NBR
1200	1,1A	1	843079047		ASSEMBLY,SUPPORT			
1205	1,1A	2	900638578		SCREW,FLAT HEAD .216-24 X 1/2 IN. 289A FINISH			
1250	1,1A,1B, 24,26, 26A,40	6	840026835		SCREW,TTF SLOTTED HEX, WASHER HD .216-24 X 5/8 TAPPING TYPE (SWAGE FORM) STEEL ZINC PLATE 289A FINISH			
1251	24A,40A, 40B	10	840026835		SCREW,TTF SLOTTED HEX, WASHER HD .216-24 X 5/8 TAPPING TYPE (SWAGE FORM) STEEL ZINC PLATE 289A FINISH			
1255	41,41A, 44,44A	12	840026835		SCREW,TTF SLOTTED HEX, WASHER HD .216-24 X 5/8 TAPPING TYPE (SWAGE FORM) STEEL ZINC PLATE 289A FINISH			
1260	1	48	100203421	72A	FUSE,DUMMY FUSE POS 1T THRU 24T, FUSE POS 1B THRU 24B			
1261	1,1A	48	103757977	72B	FUSE,DUMMY FUSE POS 1T THRU 24T, FUSE POS 1B THRU 24B			
1270	3,17	OMIT 4	100203421	72A	FUSE,DUMMY			18
1271	3,17	OMIT 4	103757977	72B	FUSE,DUMMY			18
1280	3,17	4	100203348	70C	FUSE 3 AMP			18
1290	3,17	4	401922075	KS14174L3	PIN,DESIGNATION NYLON BLUE			18
1300	4	OMIT 4	100203421	72A	FUSE,DUMMY FUSE POS 2T,20T,2B,19B			15
1301	4	OMIT 4	103757977	72B	FUSE,DUMMY FUSE POS 2T,20T,2B,19B			15
1305	22	OMIT 2	100203421	72A	FUSE,DUMMY FUSE POS 2T,19B			
1306	23	OMIT 2	103757977	72B	FUSE,DUMMY FUSE POS 2T,19B			
1307	23	OMIT 2	100203421	72A	FUSE,DUMMY FUSE POS 2B,20T			
1308	23	OMIT 2	103757977	72B	FUSE,DUMMY FUSE POS 2B,20T			
1310	4,22	1	100203397	70H	FUSE .75 AMP FUSE POS 2T			
1320	4,22	1	401922117	KS14174L8	PIN,DESIGNATION NYLON BROWN FUSE POS 2T			
1330	4	1	100203355	70D	FUSE 5 AMP FUSE POS 19B			
1335	23	1	100203397	70H	FUSE .75 AMP FUSE POS 19B			
1340	4	1	401922083	KS14174L4	PIN,DESIGNATION NYLON GREEN FUSE POS 19B			
1345	23	1	401922117	KS14174L8	PIN,DESIGNATION NYLON BROWN FUSE POS 19B			
1350	5,8	OMIT 2	100203421	72A	FUSE,DUMMY			
1351	5,8	OMIT 2	103757977	72B	FUSE,DUMMY			
1360	5,8	2	100203330	70B	FUSE 2 AMP FUSE POS 1B,21B			
1370	5,8	2	997076922	KS14174L2	PIN,DESIGNATION ORANGE FUSE POS 1B,21B			
1371	5,8	2	401922067	KS14174L2	PIN,DESIGNATION NYLON ORANGE FUSE POS 1B,21B			
1380	7	OMIT 1	100203421	72A	FUSE,DUMMY			18
1381	7	OMIT 1	103757977	72B	FUSE,DUMMY			18

******** STOCKLIST CONTINUED AT RIGHT *********

STOCKLIST

ITEM NBR	LIST GROUP CODE	QTY PER CODE	PRODUCT IDENTIFIER	CODE	DESCRIPTION	REFERENCE POSITION	NOTE SYM	NOTE NBR
1390	7	1	100203348	70C	FUSE 3 AMP		*/	18
1400	7	1	401922075	KS14174L3	PIN,DESIGNATION NYLON BLUE		*/	18
1440	1,10	4	843084104		PANEL			20
1450	1,10	16	840058234		SCREW,PAN HEAD MACHINE .112-40 X 3/16 STEEL 289A FINISH			20
1460	1	1	ED5D088-10,G32		LABEL, FUSE			20
1470	1	1	ED5D088-10,G33		LABEL, FUSE			20
1480	2,21	2	814570107	P-45G010	ADAPTER			
1490	2,21	24	840026835		SCREW,TTF SLOTTED HEX, WASHER HD .216-24 X 5/8 TAPPING TYPE (SWAGE FORM) STEEL ZINC PLATE 289A FINISH			
1500	1,10,29, 42	2	401273040	KS21320L1	SOCKET,RELAY			
1510	1,10,29	2	102600186	549D	DIODE,LIGHT EMITTING RED			
1511	1,10,29	2	102602117	549D	DIODE,LIGHT EMITTING RED			
1570	1,1A,1B, 10,10A	4	900666256		NUT,TOPLOCK FLANGE CADMIUM FINISH #NF1213S GRIPCO FASTENER CO OR EQUIVALENT		*	
1580	1,1A,1B, 10,10A	4	843084385		SCREW,HEXAGON HEAD CAP .500-13 X 5 3/4		*	
1590	1,1A,1B, 10,10A	4	814251914	P-42E191	WASHER,PLAIN .090 STEEL 289A FINISH		*	
1600	1,1A,1B, 10,10A	4	843082470		SPACER		*	
1611	1	2	845081942		LABEL,ALARM			
1612	29	OMIT 2	845081942		LABEL,ALARM			
1613	29	2	845623123		LABEL			
1660	6	2	ED5D507-16,G2		ASSEMBLY, CABLE			
1670	6	2	ED5D507-16,G3		ASSEMBLY, CABLE			
1681	1,BN	2	845082247		LABEL,CABINET DESIGNATION			25
1682	1A 1B 10A	2	ED5D695-10,G1316 G1316, G1316		LABEL, CABINET ADDRESS			39
1683	BN	OMIT 2	ED5D695-10,G1316		LABEL, CABINET ADDRESS			39
1700	6	OMIT 1	ED5D088-10,G32		LABEL, FUSE			
1701	1A Y	2	ED5D088-10,G47, G47		LABEL, FUSE			20
1710	6	OMIT 1	ED5D088-10,G33		LABEL, FUSE			
1720	A	1	ED5D088-10,G48		LABEL, FUSE			
1730	7	1	ED5D088-10,G49		LABEL, FUSE		*/	
1740	6	2	ED5D088-10,G47		LABEL, FUSE			

STOCKLIST CONTINUED ON SHEET D5

COPYRIGHT @ 2001 LUCENT TECHNOLOGIES
ALL RIGHTS RESERVED

BT13

5ESS SWITCHING EQUIPMENT
SPECIFICATION FOR
MISCELLANEOUS CABINET

DWG SIZE C2 | ISSUE 117

LUCENT TECHNOLOGIES INC | J5D005C-1 | SHEET D4 OF 86

PRINTED IN U.S.A.

STOCKLIST

ITEM NBR	LIST GROUP CODE	QTY PER CODE	PRODUCT IDENTIFIER	CODE	DESCRIPTION	REFERENCE POSITION	NOTE SYM	NOTE NBR
1750	1,10	10	900650888		CLIP,CORD #ACC19-A PANDUIT CO. OR EQUIVALENT			
1760	8 8A	1	J5D005AD-1,L2, L2		UNIT, OFFICE ALARM			
1761	BK	1	J5D005AD-1,LC		UNIT, OFFICE ALARM			
1770	4,22	OMIT 1	100203421	72A	FUSE,DUMMY FUSE POS 5T			
1771	4,22	OMIT 1	103757977	72B	FUSE,DUMMY FUSE POS 5T			
1780	4,22	1	100203397	70H	FUSE .75 AMP FUSE POS 5T			
1790	4,22	1	401922117	KS14174L8	PIN,DESIGNATION NYLON BROWN FUSE POS 5T			
1800	1,1A,1B, 10,10A	4	997244439		BUSHING,SNAP #SB-750-10 HEYMAN MFG CO. OR EQUIVALENT			
1810	1,1A,1B, 10,10A	1	995230927		BUSHING,SNAP #SB-500-5 HEYMAN MFG CO OR EQUIVALENT			
1820	4,23,23A	1	102424736	727A	CAPACITOR .02 UF			21
1830	4,22	10	402604359		LUG,TERMINAL FORK TYPE PRESSURE CONNECTOR NYLON INSULATED #RB2257 THOMAS & BETTS CO. OR EQUIVALENT			23
1840	4	2	402671481		LUG,TERMINAL #60365-2 AMP INC. OR EQUIVALENT			22
1845	4,22,22A	2	406918912		RECEPTACLE #41774 AMP INC. OR EQUIVALENT			
1846	4,22	2	406918912		RECEPTACLE #41774 AMP INC.			
1850	4,22	2	401308085		SLEEVE,HEAT SHRINKABLE 1/4 IN.DIA.X.750 IN. BLACK #RT876 RAYCHEM CORP. OR EQUIVALENT			23
1860	4 22 23	OMIT 1	ED5D088-10,G32, G32, G32		LABEL, FUSE			20
1871	23,23A	10	900715855		TUBING HEAT SHRINK 3/16 X 1.5 IN RED #RT876 RAYCHEM CORP.			
1875	9 9A 9B	1	J5D005AD-1,L3, L3, L3		UNIT, OFFICE ALARM			
1876	BL	1	J5D005AD-1,LD		UNIT, OFFICE ALARM			
1877	9C 9D	1	J5D005AD-1,L3A, L3A		UNIT, OFFICE ALARM			
1878	9E	1	J5D005AD-1,L3B		UNIT, OFFICE ALARM			
1885	9 9A 9C	1	ED5D088-10,G58, G58, G58		LABEL, FUSE			
1890	9 9A 9C	1	ED5D088-10,G59, G59, G59		LABEL, FUSE			
1900	B	1	J5D005AA-1,LA		UNIT, RESISTOR NETWORK			
1910	C	1	J5D005AA-1,LB		UNIT, RESISTOR NETWORK			

******** STOCKLIST CONTINUED AT RIGHT *********

STOCKLIST

ITEM NBR	LIST GROUP CODE	QTY PER CODE	PRODUCT IDENTIFIER	CODE	DESCRIPTION	REFERENCE POSITION	NOTE SYM	NOTE NBR
1920	D	1	J5D005AA-1,LC		UNIT, RESISTOR NETWORK			
1925	BC	1	J5D005AA-1,LE		UNIT, RESISTOR NETWORK			
1930	9	OMIT 1	100203421	72A	FUSE,DUMMY FUSE POS 5T			
1931	9,9A,9C	OMIT 1	103757977	72B	FUSE,DUMMY FUSE POS 5T			
1940	9,9A,9C	1	100203348	70C	FUSE 3 AMP FUSE POS 5T			
1950	9,9A,9C	1	401922075	KS14174L3	PIN,DESIGNATION NYLON BLUE FUSE POS 5T			
1960	5,5A,8, 8A	2	406918912		RECEPTACLE #41774 AMP INC. OR EQUIVALENT			23
1961	5,5A,8	2	406918912		RECEPTACLE #41774 AMP INC.			23
1970	5,5A,8	2	401615992		LUG,TERMINAL #A224 THOMAS & BETTS CO. OR EQUIVALENT			23
1980	1,10,29	4	900442260		TUBING,HEAT SHRINKABLE 3/32 IN X 3/4 IN LG BK #RT876 RAYCHEM CORP. OR EQUIVALENT			23
2000	1,1A,1B, 10,10A	1	843087073		SUPPORT,CABLE			
2001	1,1A,1B, 10,10A	1	845309848		ASSEMBLY,CABLE SUPPORT			
2010	5,5A,5B, 5C,8,8A, 9,9A,9B, 9C,9D,9E	3	843049008		SUPPORT,CABLE			
2011	BE	1	843049008		SUPPORT,CABLE			38
2012	BE	1	845311117		SUPPORT,BRACKET			38
2013	5D	3	847169208		ROD,ROUND UNIVERSAL SUPPORT ROD (3.0")			
2015	5,5A,5B, 5C,8,8A, 9,9A,9B, 9C,9D,9E	6	840059075		SCREW,PAN HEAD MACHINE .164-32 X 7/16 STEEL 289A FINISH			
2016	5,5A,5B, 5C,8,8A, 9,9A,9B, 9C,9D,9E	6	814251856	P-42E185	WASHER,PLAIN .164 STEEL 289A FINISH			
2017	BE	2	840059075		SCREW,PAN HEAD MACHINE .164-32 X 7/16 STEEL 289A FINISH			
2018	BE	2	814251856	P-42E185	WASHER,PLAIN .164 STEEL 289A FINISH			
2019	GP,GQ	1	847169208		ROD,ROUND UNIVERSAL SUPPORT ROD (3.0")			
2020	4	3	843058462		SUPPORT,WIRE GUIDE			

STOCKLIST CONTINUED ON SHEET D6

COPYRIGHT @ 2001 LUCENT TECHNOLOGIES
ALL RIGHTS RESERVED

BT13

5ESS SWITCHING EQUIPMENT
SPECIFICATION FOR
MISCELLANEOUS CABINET

DWG SIZE C2 | ISSUE 117

LUCENT TECHNOLOGIES INC | J5D005C-1 | SHEET D5 OF 86

PRINTED IN U.S.A.

STOCKLIST

ITEM NBR	LIST GROUP CODE	QTY PER CODE	PRODUCT IDENTIFIER	CODE	DESCRIPTION	REFERENCE POSITION	NOTE SYM	NOTE NBR
2030	22,22A	2	843058462		SUPPORT,WIRE GUIDE			
2040	16,16A, 16B,23, 23A	1	843058462		SUPPORT,WIRE GUIDE			103
2050	6,M	1	843058462		SUPPORT,WIRE GUIDE			
2055	7,7A	2	843058470		SUPPORT,WIRE GUIDE			
2090	E	OMIT 10	103757977	72B	FUSE,DUMMY			24
2100	E	10	100203330	70B	FUSE 2 AMP			24
~~2110~~	~~E~~	~~10~~	~~997076922~~	~~KS14174L2~~	~~PIN,DESIGNATION ORANGE~~			~~24~~
2111	E	10	401922067	KS14174L2	PIN,DESIGNATION NYLON ORANGE			24
2115	F	OMIT 36	103757977	72B	FUSE,DUMMY			24
2120	F	36	100203330	70B	FUSE 2 AMP			24
~~2130~~	~~F~~	~~36~~	~~997076922~~	~~KS14174L2~~	~~PIN,DESIGNATION ORANGE~~			~~24~~
2131	F	36	401922067	KS14174L2	PIN,DESIGNATION NYLON ORANGE			24
2135	G	OMIT 46	103757977	72B	FUSE,DUMMY			24
2140	G	46	100203330	70B	FUSE 2 AMP			24
~~2150~~	~~G~~	~~46~~	~~997076922~~	~~KS14174L2~~	~~PIN,DESIGNATION ORANGE~~			~~24~~
2151	G	46	401922067	KS14174L2	PIN,DESIGNATION NYLON ORANGE			24
2155	H	OMIT 52	103757977	72B	FUSE,DUMMY			24
2160	H	52	100203330	70B	FUSE 2 AMP			24
~~2170~~	~~H~~	~~52~~	~~997076922~~	~~KS14174L2~~	~~PIN,DESIGNATION ORANGE~~			~~24~~
2171	H	52	401922067	KS14174L2	PIN,DESIGNATION NYLON ORANGE			24
2175	I	OMIT 12	103757977	72B	FUSE,DUMMY			24
2180	I	12	100203330	70B	FUSE 2 AMP			24
~~2190~~	~~I~~	~~12~~	~~997076922~~	~~KS14174L2~~	~~PIN,DESIGNATION ORANGE~~			~~24~~
2191	I	12	401922067	KS14174L2	PIN,DESIGNATION NYLON ORANGE			24
2195	J	OMIT 74	103757977	72B	FUSE,DUMMY			24
2200	J	74	100203330	70B	FUSE 2 AMP			24
~~2210~~	~~J~~	~~74~~	~~997076922~~	~~KS14174L2~~	~~PIN,DESIGNATION ORANGE~~			~~24~~
2211	J	74	401922067	KS14174L2	PIN,DESIGNATION NYLON ORANGE			24
2220	10 10A	1	J5D003AJ-1,L1, L2, L1,L2		PANEL, +48V FUSE			
2225	10,10A	48	103757977	72B	FUSE,DUMMY POS 1T-24T POS 1B-24B			
~~2230~~	~~10 10A~~	~~1~~	~~J86905A-1,L3, L6, L3,L6~~		~~PANEL, CONVERTER~~		~~S~~	
~~2240~~	~~11~~	~~1~~	~~J86905A-1,L4~~		~~PANEL, CONVERTER~~		~~S~~	
2250	12	1	J5D003AJ-1,L1		PANEL, +48V FUSE			
2255	12	48	103757977	72B	FUSE,DUMMY POS 1T-24T POS 1B-24B			
2260	12	1	102737913	132AD	UNIT,POWER CLEI = PWPQ15DAXX			

******** STOCKLIST CONTINUED AT RIGHT *********

STOCKLIST

ITEM NBR	LIST GROUP CODE	QTY PER CODE	PRODUCT IDENTIFIER	CODE	DESCRIPTION	REFERENCE POSITION	NOTE SYM	NOTE NBR
2270	13	1	J5D003AJ-1,L1		PANEL, +48V FUSE			
2275	13	48	103757977	72B	FUSE,DUMMY POS 1T-24T POS 1B-24B			
~~2280~~	~~13~~	~~1~~	~~J86905A-1,L4~~		~~PANEL, CONVERTER~~		~~S~~	
2290	14	1	J5D003AJ-1,L1		PANEL, +48V FUSE			
2295	14	48	103757977	72B	FUSE,DUMMY POS 1T-24T POS 1B-24B			
2300	15	1	J5D003AJ-1,L1		PANEL, +48V FUSE			
2305	15	48	103757977	72B	FUSE,DUMMY POS 1T-24T POS 1B-24B			
2310	15	1	102737913	132AD	UNIT,POWER CLEI = PWPQ15DAXX			
2320	5 8	1	ED5D088-10,G86, G86		LABEL, FUSE			
2330	5 8	1	ED5D088-10,G87, G87		LABEL, FUSE			
2340	4 23	1	ED5D088-10,G88, G88		LABEL, FUSE			
2341	23	1	ED5D088-10,G88A		LABEL, FUSE			
2350	4 23	1	ED5D088-10,G89, G89		LABEL, FUSE			
2351	22	1	ED5D088-10,G89A		LABEL, FUSE			
2352	22	1	ED5D088-10,G89B		LABEL, FUSE			
2360	L	2	843058462		SUPPORT,WIRE GUIDE			
~~2370~~	~~N~~	~~1~~	~~J5D005AA-1,LD~~		~~UNIT, RESISTOR NETWORK~~			
2380	O	1	J5D005AD-1,LA		UNIT, OFFICE ALARM			
~~2390~~	~~16~~	~~1~~	~~J5D005CB-1,L1~~		~~UNIT, REMOTE ALARM RELAY~~			
~~2393~~	~~AP~~	~~1~~	~~J5D005CB-1,LWA~~		~~UNIT, REMOTE ALARM RELAY~~			
2394	AQ	1	J5D005CB-1,L3		UNIT, REMOTE ALARM RELAY			
2395	4,6,22, 22A,L,M	2	801829227	P-182922	NUT,HEXAGON .216-24			
2396	7,7A	4	801829227	P-182922	NUT,HEXAGON .216-24			
2400	P	OMIT 1	ED5D184-70,G2		ASSEMBLY, CABINET			
2410	P	1	ED5D184-71,G2		ASSEMBLY, CABINET			
2420	Q	OMIT 1	ED5D184-70,G2		ASSEMBLY, CABINET			
2430	Q	1	ED5D184-71,G8		ASSEMBLY, CABINET			
2440	R	OMIT 1	ED5D184-70,G5		ASSEMBLY, CABINET			
2450	R	1	ED5D184-71,G5		ASSEMBLY, CABINET			
2460	V	OMIT 12	103757977	72B	FUSE,DUMMY			24
2470	V	12	100203330	70B	FUSE 2 AMP			24

STOCKLIST CONTINUED ON SHEET D7

COPYRIGHT @ 2001 LUCENT TECHNOLOGIES
ALL RIGHTS RESERVED

BT13

5ESS SWITCHING EQUIPMENT
SPECIFICATION FOR
MISCELLANEOUS CABINET

DWG SIZE C2 | ISSUE 117

LUCENT TECHNOLOGIES INC | J5D005C-1 | SHEET D6 OF 86

PRINTED IN U.S.A.

STOCKLIST

ITEM NBR	LIST GROUP CODE	QTY PER CODE	PRODUCT IDENTIFIER	CODE	DESCRIPTION	REFERENCE POSITION	NOTE SYM	NOTE NBR
~~2480~~	~~V~~	~~12~~	~~997076922~~	~~KS14174L2~~	~~PIN,DESIGNATION ORANGE~~			~~24~~
2481	V	12	401922067	KS14174L2	PIN,DESIGNATION NYLON ORANGE			24
2490	W	1	J5D005AD-1,LA		UNIT, OFFICE ALARM			
~~2500~~	~~X~~	~~1~~	~~J5D005AD-1,LWA~~		~~UNIT, OFFICE ALARM~~			
~~2505~~	~~AS~~	~~1~~	~~J5D005AD-1,LWB~~		~~UNIT, OFFICE ALARM~~			
2510	18	OMIT 1	ED5D184-71,G2		ASSEMBLY, CABINET			
2520	18	1	ED5D184-71,G10		ASSEMBLY, CABINET			
2530	19	OMIT 1	ED5D184-71,G8		ASSEMBLY, CABINET			
2540	19	1	ED5D184-71,G14		ASSEMBLY, CABINET			
2550	Y	OMIT 2	J5D003AU-1,L1		UNIT, FUSE/FILTER			
2560	1A Y	2	J5D003AU-2,L5, L5		UNIT, FUSE/FILTER			
2570	Y	OMIT 1	J5D003AU-1,LSA		UNIT, FUSE/FILTER			
2580	1A Y	1	J5D003AU-2,LC, LSF, LC,LSF		UNIT, FUSE/FILTER			
2590	Y	OMIT 1	J5D003AU-1,LSB		UNIT, FUSE/FILTER			
2600	1A Y	1	J5D003AU-2,LSG, LSG		UNIT, FUSE/FILTER			
2605	1A Y	2	J5D003AU-2,LWG, LWG		UNIT, FUSE/FILTER			
2607	Y	OMIT 2	J5D003AU-1,LWH		UNIT, FUSE/FILTER			
2609	Y BN	1	ED5D505-16,G5, G5		ASSEMBLY, CABLE			
2610	1A,1B,Z, AA,AB,AC, AD,AE,AF, CE	2	845081991		LABEL,ESD			
2611	5 8 9 9A 9C	1	ED5D505-16,G6, G7, G6,G7, G6,G7, G6,G7, G6,G7		ASSEMBLY, CABLE			
2615	29A 42A 42B BM	1	ED5D503-15,G1250 G1250, G1250, G1250		ASSEMBLY, CABLE			
~~2620~~	~~Z,AA,AB, AC,AD,AE, AF~~	~~2~~	~~402616122~~		~~LUG,TERMINAL ELECTROSTATIC DISCHARGE #E01-203 3M CO.~~			
2621	1A,1B,Z, AA,AB,AC, AD,AE,AF, CE	3	405701756		TERMINAL,LUG #M8-14R/SX 3M CO.			
~~2630~~	~~1A,1B,Z, AA,AB,AC, AD,AE,AF, CE~~	~~2~~	~~840026835~~		~~SCREW,TTF SLOTTED HEX, WASHER HD .216-24 X 5/8 TAPPING TYPE (SWAGE FORM) STEEL ZINC PLATE 289A FINISH~~			
~~2640~~	~~1A,1B,Z, AB,AC,AE, AF~~	~~4~~	~~406763276~~		~~SCREW,HEX HEAD SLOTTED .190-32 STAINLESS STEEL #ATT04034SP CAMCAR TEXTRON /OR EQUIV.~~			
2641	1A,1B,Z, AB,AC,AE, AF	4	406763276		SCREW,HEX HEAD SLOTTED .190-32 STAINLESS STEEL #ATT04034SP CAMCAR TEXTRON			
2650	1A,1B,Z, AB,AC,AE, AF	4	900559121		WASHER,SPRING #UN250-0110 ASSOCIATED SPRING CO. /OR EQUIV.			

******** STOCKLIST CONTINUED AT RIGHT *********

STOCKLIST

ITEM NBR	LIST GROUP CODE	QTY PER CODE	PRODUCT IDENTIFIER	CODE	DESCRIPTION	REFERENCE POSITION	NOTE SYM	NOTE NBR
2680	1A,1B,Z, AB,AC,AE, AF	8	814251856	P-42E185	WASHER,PLAIN .164 STEEL 289A FINISH			
2700	Z AA AB AC AE AF	OMIT 1	ED5D184-70,G2, G2, G2, G2, G2, G2		ASSEMBLY, CABINET			
2702	CE	OMIT 1	ED5D184-74,G7A		ASSEMBLY, CABINET			
2705	AD	OMIT 1	ED5D184-74,G7		ASSEMBLY, CABINET			
2710	Z AA	1	ED5D184-72,G1, G1		ASSEMBLY, CABINET			
2720	AB AC AE AF BN	1	ED5D184-73,G3, G3, G3, G3, G3		ASSEMBLY, CABINET			
~~2721~~	~~1A 10A~~	~~1~~	~~ED5D184-74,G3, G3~~		~~ASSEMBLY, CABINET~~			
2722	BN	OMIT 1	ED5D184-74,G7		ASSEMBLY, CABINET			
2723	1A 10A	1	ED5D184-74,G7, G7		ASSEMBLY, CABINET			
2730	AD	1	ED5D184-73,G1		ASSEMBLY, CABINET			
2731	AD CE	1	ED5D184-74,G10, G10		ASSEMBLY, CABINET			
2732	AD	OMIT 1	ED5D184-73,G1		ASSEMBLY, CABINET			
2733	AD CE	OMIT 1	ED5D694-30,G1, G1		ASSEMBLY, BEZEL COVER			
2735	AD CE	OMIT 1	ED5D694-30,G2, G2		ASSEMBLY, BEZEL COVER			
~~2737~~	~~AD,CE~~	~~OMIT 2~~	~~845622976~~		~~ASSEMBLY,DOOR PERFORATED (CENTER-OPENING)~~		~~S~~	
2738	AD	1	ED5D503-15,G1250 G1268		ASSEMBLY, CABLE			
2740	Z,AB,AC	2	843077900		BEZEL			
2750	AE,AF,BN	2	845313220		BEZEL,EMI			
~~2760~~	~~Z~~	~~1~~	~~843079807~~		~~ASSEMBLY,DOOR~~		~~S~~	
~~2770~~	~~Z~~	~~1~~	~~843079815~~		~~ASSEMBLY,DOOR~~		~~S~~	
2780	AB	1	845619477		ASSEMBLY,DOOR PERFORATED			
2790	AB	1	845619261		ASSEMBLY,DOOR			
~~2791~~	~~BP~~	~~2~~	~~845622976~~		~~ASSEMBLY,DOOR PERFORATED (CENTER-OPENING)~~		~~S~~	
2800	AC	2	845619261		ASSEMBLY,DOOR			
2810	AE	1	845619550		ASSEMBLY,EMI DOOR			
2820	AE	1	845619519		ASSEMBLY,EMI DOOR			
2830	AF	2	845619519		ASSEMBLY,EMI DOOR			
2840	AG	1	ED5D505-16,G1		ASSEMBLY, CABLE			

STOCKLIST CONTINUED ON SHEET D8

COPYRIGHT @ 2001 LUCENT TECHNOLOGIES
ALL RIGHTS RESERVED

BT13

5ESS SWITCHING EQUIPMENT
SPECIFICATION FOR
MISCELLANEOUS CABINET

DWG SIZE C2 | ISSUE 117

LUCENT TECHNOLOGIES INC | J5D005C-1 | SHEET D7 OF 86

PRINTED IN U.S.A.

STOCKLIST

ITEM NBR	LIST GROUP CODE	QTY PER CODE	PRODUCT IDENTIFIER	CODE	DESCRIPTION	REFERENCE POSITION	NOTE SYM	NOTE NBR
2850	AH	1	ED5D505-16,G2		ASSEMBLY, CABLE			
2855	AR	1	ED5D505-16,G3		ASSEMBLY, CABLE			
2860	20	1	ED83024-30,G1, GA		PANEL, CONTROL			
2861	20,20A, 20B	12	802421321	P-242132	WASHER,LOCK .164 STEEL 289A FINISH			
2862	20,20A, 20B	8	840059059		SCREW,PAN HEAD MACHINE .164-32 X 5/16 STEEL 289A FINISH			
2863	20,20A, 20B	4	802065185	P-206518	NUT,HEXAGON .164-32 STEEL 289A FINISH			
2868	20A 20B	1	ED83024-30,G5, G5		PANEL, CONTROL			
2869	20C	1	ED83133-30,G4		PANEL, POWER DISTRIBUTION 48V DC			
2870	20A 20B	1	ED83024-30,G2, GB, G2,GB		PANEL, CONTROL			
2871	20C	1	ED83133-30,G1		PANEL, POWER DISTRIBUTION 48V DC			
2872	20C	4	ED5D507-16,G11		ASSEMBLY, CABLE			
2873	20C	1	847320934		KIT,HARDWARE		*/	
2874	20C	12	901276907	M5X10	SCREW,HEXAGONAL WASHER STEEL SHAKEPROOF			
2880	20,20A, 20B,20C	1	843779539		ASSEMBLY,TIE BAR			
2890	20,20A, 20B,20C	2	840047534		SCREW,PAN HEAD SELF TAPPING .216-24 X 5/8 STEEL 289A FINISH			
2900	23	2	100203397	70H	FUSE .75 AMP FUSE POS 2B,20T			
2910	23	2	401922117	KS14174L8	PIN,DESIGNATION NYLON BROWN FUSE POS 2B,20T			
2930	20,20A, 20B	4	402178511	KS21053L33	CONNECTOR		*	
2935	20,20A, 20B,20C	4	405347923	WP91412L27	CONNECTOR		*	
2940	20	8	801472846	P-147284	SCREW,HEXAGON HEAD CAP .375-16 X 1-1/4		*	
2945	20,20A, 20B	8	801273129	P-127312	SCREW,HEXAGON HEAD CAP .375-16 X 1 STEEL 289A FINISH		*	
2950	20,20A, 20B	8	802286773	P-228677	WASHER,LOCK		*	
2960	20	4	801829078	P-182907	NUT,HEXAGON .375-16 STEEL 289A FINISH		*	
2961	20,20A, 20B	4	841064777		NUT,HEXAGONAL 3/8-16, STEEL 289A FINISH		*	
2965	BD	1	846309045		ASSEMBLY,PDCP COVER			37
2967	BD	4	840026835		SCREW,TTF SLOTTED HEX, WASHER HD .216-24 X 5/8 TAPPING TYPE (SWAGE FORM) STEEL ZINC PLATE 289A FINISH			37
2968	20,20A, 20B	16	840026835		SCREW,TTF SLOTTED HEX, WASHER HD .216-24 X 5/8 TAPPING TYPE (SWAGE FORM) STEEL ZINC PLATE 289A FINISH			
2970	AJ	2	ED5D507-16,G6		ASSEMBLY, CABLE		*	72
2980	AJ	1	ED5D507-16,G7, G8		ASSEMBLY, CABLE		*	72
2990	AK	4	ED5D507-16,G9		ASSEMBLY, CABLE		*	72
3000	24	1	J5D003ED-1,L1, LA		UNIT, TRANSMISSION RATE CONVERTER			

******** STOCKLIST CONTINUED AT RIGHT *********

STOCKLIST

ITEM NBR	LIST GROUP CODE	QTY PER CODE	PRODUCT IDENTIFIER	CODE	DESCRIPTION	REFERENCE POSITION	NOTE SYM	NOTE NBR
3001	24A	1	J5D003ED-1,L1, LC		UNIT, TRANSMISSION RATE CONVERTER			
3002	24B 24C	1	J5D003ED-1,L1, LD, L1,LD		UNIT, TRANSMISSION RATE CONVERTER			
3005	25D 25E	1	J5D003ED-2,L3, L3		UNIT, TRANSMISSION RATE CONVERTER			101
3006	25F 25G	1	J5D003ED-2,L4B, L4B		UNIT, TRANSMISSION RATE CONVERTER			
3007	25H 25I	1	J5D003ED-2,L4C, L4C		UNIT, TRANSMISSION RATE CONVERTER			
3008	25J 25K	1	J5D003ED-2,L3A, L3A		UNIT, TRANSMISSION RATE CONVERTER			101
3009	25L 25M	1	J5D003ED-2,L4D, L4D		UNIT, TRANSMISSION RATE CONVERTER			
3010	25	1	J5D003ED-1,L2		UNIT, TRANSMISSION RATE CONVERTER			
3011	25A	1	J5D003ED-1,L2A		UNIT, TRANSMISSION RATE CONVERTER			
3012	25B 25C	1	J5D003ED-1,L2B, L2B		UNIT, TRANSMISSION RATE CONVERTER			
3015	BG	1	J5D003ED-1,LB		UNIT, TRANSMISSION RATE CONVERTER			
3020	26	1	ED8C010-50,G2, G5,G10,G11		PANEL, LSCIM			26
3030	24,24A, 40	2	100203330	70B	FUSE 2 AMP			27
3040	25,25A	2	100203330	70B	FUSE 2 AMP			27
3050	24,40	2	997076922	KS14174L2	PIN,DESIGNATION ORANGE			27
3051	24,24A, 40	2	401922067	KS14174L2	PIN,DESIGNATION NYLON ORANGE			27
3060	25	2	997076922	KS14174L2	PIN,DESIGNATION ORANGE			27
3061	25,25A	2	401922067	KS14174L2	PIN,DESIGNATION NYLON ORANGE			27
3070	26,26A	2	841961113		BAR,FRAME MOUNTING		S	
3080	26,26A	4	840059083		SCREW,PAN HEAD MACHINE .164-32 X 1/2 STEEL 289A FINISH		S	
3090	24 24A	1	ED5D088-10,G189, G190, G189,G190		LABEL, FUSE			28
3100	25 25A	1	ED5D088-10,G191, G192, G191,G192		LABEL, FUSE			28
3110	AL,AT,AY	OMIT 1	845619261		ASSEMBLY,DOOR			
3120	AL,AT,AY	OMIT 1	845619477		ASSEMBLY,DOOR PERFORATED			
3130	AL,AT	1	845310515		ASSEMBLY,DOOR		S	
3140	AL,AT	1	845310507		ASSEMBLY,DOOR		S	
3150	AM,AU	OMIT 2	845619261		ASSEMBLY,DOOR			
3160	AM,AU	2	845310515		ASSEMBLY,DOOR		S	

STOCKLIST CONTINUED ON SHEET D9

COPYRIGHT @ 2001 LUCENT TECHNOLOGIES
ALL RIGHTS RESERVED

BT13

5ESS SWITCHING EQUIPMENT
SPECIFICATION FOR
MISCELLANEOUS CABINET

DWG SIZE C2 | ISSUE 117

LUCENT TECHNOLOGIES INC | J5D005C-1 | SHEET D8 OF 86

PRINTED IN U.S.A.

STOCKLIST

ITEM NBR	LIST GROUP CODE	QTY PER CODE	PRODUCT IDENTIFIER	CODE	DESCRIPTION	REFERENCE POSITION	NOTE SYM	NOTE NBR
3170	27,27A	2	802134809	P-213480	BRACKET		S	
3180	27,27A	8	840026835		SCREW,TTF SLOTTED HEX, WASHER HD .216-24 X 5/8 TAPPING TYPE (SWAGE FORM) STEEL ZINC PLATE 289A FINISH		S	
3190	27	2	ED5D088-10,G240		LABEL, FUSE		S	30
3200	AN	1	ED5D088-10,G240		LABEL, FUSE		S	30
3230	27,52,53	2	100203371	70F	FUSE .25 AMP		S	30
3231	27A,52A, 53A	2	406663971	WP91768L104	FUSE,.50 AMP FAST ACTING		S	40
3240	27	2	996110466	KS14174L10	PIN,DESIGNATION VIOLET		*/	30
3241	27,52,53	2	401922125	KS14174L10	PIN,DESIGNATION NYLON VIOLET		S	30
3250	AN	1	103357794	70P	FUSE .1 AMP		S	30
3251	AN	1	100203413	70P	FUSE .1 AMP		S	
3260	AN	1	996110474	KS16078L5	PIN BRASS (GRAY-WHITE)		S	30
3270	28 28A	1	J5D003FG-1,L1, LB, L1,LB		UNIT, LINK ADAPTER			31 45
3280	28	1	845309848		ASSEMBLY,CABLE SUPPORT			32
3281	28,28A	1	843049008		SUPPORT,CABLE			32
3282	28A	1	847169208		ROD,ROUND UNIVERSAL SUPPORT ROD (3.0")			
3290	28	OMIT 4	103757977	72B	FUSE,DUMMY			31
3300	28	4	100203355	70D	FUSE 5 AMP			31
3310	28	4	401922083	KS14174L4	PIN,DESIGNATION NYLON GREEN			31
3320	28	4	ED5D088-10,G273		LABEL, FUSE			31
3325	BA	1	ED5D505-15,G10, G11		ASSEMBLY, CABLE			
3326	BB	1	ED5D505-15,G12, G13		ASSEMBLY, CABLE			
3330	AV,AZ	OMIT 1	845619550		ASSEMBLY,EMI DOOR			
3340	AV,AZ	OMIT 1	845619519		ASSEMBLY,EMI DOOR			
3350	AV	1	845312826		ASSEMBLY,DOOR		S	
3360	AV	1	845312834		ASSEMBLY,DOOR		S	
3370	AW	OMIT 2	845619519		ASSEMBLY,EMI DOOR			
3380	AW	2	845312834		ASSEMBLY,DOOR		S	
3390	30	1	ED5D184-73,G3		ASSEMBLY, CABINET			
3400	30	2	843077900		BEZEL			
3410	30	2	102600186	549D	DIODE,LIGHT EMITTING RED			
3411	30	2	102602117	549D	DIODE,LIGHT EMITTING RED			
3420	30,42	2	102600202	549F	DIODE,LIGHT EMITTING YELLOW			
3421	30,42	2	102602133	549F	DIODE,LIGHT EMITTING YELLOW			
3430	30,42	2	845081934		LABEL,ALARM			
3440	30	2	845082247		LABEL,CABINET DESIGNATION			25
3450	30	2	845081991		LABEL,ESD ESD			

******** STOCKLIST CONTINUED AT RIGHT *********

STOCKLIST

ITEM NBR	LIST GROUP CODE	QTY PER CODE	PRODUCT IDENTIFIER	CODE	DESCRIPTION	REFERENCE POSITION	NOTE SYM	NOTE NBR
3460	30	1	845310507		ASSEMBLY,DOOR		S	
3470	30	1	845310515		ASSEMBLY,DOOR		S	
3480	30	1	843079047		ASSEMBLY,SUPPORT			
3490	30	2	900715905		SCREW,FLAT HEAD TAPPING .216-24 X 3/8 IN. STEEL 584 FINISH TYPE SW SWAGEFORM			
3500	30	2	840047518		SCREW,PAN HEAD SLOTTED .216-24 X 3/8 IN. SWAGEFORM			
3510	30	2	J5D003AU-2,L5		UNIT, FUSE/FILTER			
3520	30	1	J5D003AU-2,LC, LSF		UNIT, FUSE/FILTER			
3530	30	1	J5D003AU-2,LSG		UNIT, FUSE/FILTER			
3540	30	2	J5D003AU-2,LWG		UNIT, FUSE/FILTER			
3550	30	2	402616122		LUG,TERMINAL ELECTROSTATIC DISCHARGE #E01-203 3M CO.			
3551	30	2	405701756		TERMINAL,LUG #M8-14R/SX 3M CO.			
3560	30	6	840026835		SCREW,TTF SLOTTED HEX, WASHER HD .216-24 X 5/8 TAPPING TYPE (SWAGE FORM) STEEL ZINC PLATE 289A FINISH			
3570	30	4	996096970		SCREW,SHOULDER #4327 PIC DESIGN CORP. OR EQUIVALENT			
3580	30	4	900559121		WASHER,SPRING #UN250-0110 ASSOCIATED SPRING CO.			
3590	30	4	843077942		BRACKET			
3600	30	8	840059042		SCREW,PAN HEAD MACHINE .164-32 X 1/4 STEEL 289A FINISH			
3610	30	8	814251856	P-42E185	WASHER,PLAIN .164 STEEL 289A FINISH			
3620	30	4	401273040	KS21320L1	SOCKET,RELAY			
3630	30	4	843084104		PANEL			20
3640	30	8	843084385		SCREW,HEXAGON HEAD CAP .500-13 X 5 3/4			
3650	30	8	814251914	P-42E191	WASHER,PLAIN .090 STEEL 289A FINISH			
3660	30	4	843082470		SPACER			
3670	30	4	997244439		BUSHING,SNAP #SB-750-10 HEYMAN MFG CO. OR EQUIVALENT			
3680	30	1	995230927		BUSHING,SNAP #SB-500-5 HEYMAN MFG CO OR EQUIVALENT			
3690	30	1	843087073		SUPPORT,CABLE			

STOCKLIST CONTINUED ON SHEET D10

COPYRIGHT @ 2001 LUCENT TECHNOLOGIES
ALL RIGHTS RESERVED

BT13

5ESS SWITCHING EQUIPMENT
SPECIFICATION FOR
MISCELLANEOUS CABINET

DWG SIZE C2 | ISSUE 117

LUCENT TECHNOLOGIES INC | J5D005C-1 | SHEET D9 OF 86

PRINTED IN U.S.A.

STOCKLIST

ITEM NBR	LIST GROUP CODE	QTY PER CODE	PRODUCT IDENTIFIER	CODE	DESCRIPTION	REFERENCE POSITION	NOTE SYM	NOTE NBR
3700	30	44	103757977	72B	FUSE,DUMMY POS 1T-4T POS 7T-16T POS 19T-24T POS 1B-24B			
3710	30,42, 42A,42B	4	100203322	70A	FUSE 1.33 AMP POS 5T,6T,17T,18T			
3720	30,42, 42A,42B	4	401922059	KS14174L1	PIN,DESIGNATION NYLON WHITE POS 5T,6T,17T,18T			
3725	30 42 42A 42B	OMIT 2	ED5D088-10,G47, G47, G47, G47		LABEL, FUSE			
3730	30 42 42A 42B	1	ED5D088-10,G241, G241, G241, G241		LABEL, FUSE			20
3740	30 42 42A 42B	1	ED5D088-10,G242, G242, G242, G242		LABEL, FUSE			20
3750	30	1	J5D003BE-2,L3		UNIT, FAN			
3760	30	2	843078015		GUIDE			
3770	30	1	ED5D507-15,G20, G21		ASSEMBLY, CABLE			
3780	30 42	1	ED5D503-15,G150, G2EVN		ASSEMBLY, CABLE			
3790	30	1	ED5D505-15,G1, G2		ASSEMBLY, CABLE			
3800	31	1	ED5D509-70,G2		ASSEMBLY, LINE UP CABLE RACK			
3810	31	1	ED5D508-70,G16, G17		ASSEMBLY, END GUARD			
3820	32	1	405373564		RACK,MODEM ELIMINATOR 1 #900A/910 1301Z GANDALF CORP.			
3830	32	1	845311117		SUPPORT,BRACKET			
3840	32	2	845623693		BRACKET,MOUNTING			
3850	32	13	840026835		SCREW,TTF SLOTTED HEX, WASHER HD .216-24 X 5/8 TAPPING TYPE (SWAGE FORM) STEEL ZINC PLATE 289A FINISH			
3860	33	1	105157549	Z108A2	MOUNTING,DATA			
~~3870~~	~~33~~	~~2~~	~~105174270~~	~~2596A-L1A/2~~	~~UNIT,DATA SERVICE~~ ~~9.6K~~		~~S~~	
~~3880~~	~~33~~	~~2~~	~~105174221~~	~~2556A-L1A/2~~	~~UNIT,DATA SERVICE~~ ~~56K~~		~~S~~	
3890	33	2	845623685		BRACKET,MOUNTING			
3900	33	8	840026835		SCREW,TTF SLOTTED HEX, WASHER HD .216-24 X 5/8 TAPPING TYPE (SWAGE FORM) STEEL ZINC PLATE 289A FINISH			
3910	34	1	845081215		ASSEMBLY,MODIFIED PLUG			
3920	34	5	843086711		BRACKET PLUG ASSEMBLY			
3930	34	5	840059059		SCREW,PAN HEAD MACHINE .164-32 X 5/16 STEEL 289A FINISH			
3940	34	10	840026835		SCREW,TTF SLOTTED HEX, WASHER HD .216-24 X 5/8 TAPPING TYPE (SWAGE FORM) STEEL ZINC PLATE 289A FINISH			
3950	34	5	843082439		LABEL ESSENTIAL AC			
3960	34	1	845312792		FITTING ENTRANCE END			

******** STOCKLIST CONTINUED AT RIGHT *********

J5D005C-1

STOCKLIST

ITEM NBR	LIST GROUP CODE	QTY PER CODE	PRODUCT IDENTIFIER	CODE	DESCRIPTION	REFERENCE POSITION	NOTE SYM	NOTE NBR
~~3970~~	~~35~~	~~1~~	~~J5D003FG-1,L1,~~ ~~L2,L3~~		~~UNIT, LINK ADAPTER~~			
3980	35	2	843078015		GUIDE			
3990	35	4	840026835		SCREW,TTF SLOTTED HEX, WASHER HD .216-24 X 5/8 TAPPING TYPE (SWAGE FORM) STEEL ZINC PLATE 289A FINISH			
4000	35	1	ED5D505-15,G10, G11		ASSEMBLY, CABLE			
4010	35	OMIT 4	103757977	72B	FUSE,DUMMY			33
4020	35	4	100203355	70D	FUSE 5 AMP			33
4030	35	4	401922083	KS14174L4	PIN,DESIGNATION NYLON GREEN			33
4040	35	4	ED5D088-10,G273		LABEL, FUSE			33
4050	35	1	845311117		SUPPORT,BRACKET			
4060	36,42, 42A,42B, 42C,42D	2	843078015		GUIDE			
4065	42,42A, 42B,42C, 42D,42E, 42F	1	845311117		SUPPORT,BRACKET			
~~4070~~	~~36,42,~~ ~~42A,42B,~~ ~~42C,42D~~	~~8~~	~~840026835~~		~~SCREW,TTF SLOTTED HEX, WASHER HD~~ ~~.216-24 X 5/8 TAPPING TYPE (SWAGE FORM) STEEL ZINC~~ ~~PLATE 289A FINISH~~			
~~4075~~	~~BE~~	~~OMIT 1~~	~~845311117~~		~~SUPPORT,BRACKET~~			
~~4080~~	~~37~~	~~1~~	~~405373580~~		~~ELIMINATOR,MODEM~~ ~~#ME922~~ ~~GANDALF CORP.~~		~~S~~	~~78~~
~~4090~~	~~38~~	~~1~~	~~J5D003FG-1,L5,~~ ~~LE~~		~~UNIT, LINK ADAPTER~~		~~S~~	~~78~~
~~4100~~	~~38~~	~~1~~	~~ED4C674-15,G19~~		~~ASSEMBLY, CABLE~~		~~S~~	~~34~~
4110	39	1	843079625		PLENUM			
4120	39	8	840026835		SCREW,TTF SLOTTED HEX, WASHER HD .216-24 X 5/8 TAPPING TYPE (SWAGE FORM) STEEL ZINC PLATE 289A FINISH			
4130	39	2	843079948		BRACKET,MOUNTING			
4140	39	12	900820077		SCREW,SLOT HEXAGON WASHER HEAD .164-32 X 5/16			
4150	39	2	843078015		GUIDE			
4180	42	1	J5D003BE-2,L3		UNIT, FAN			
4182	BH	OMIT 1	J5D003BE-2,L3		UNIT, FAN			
4184	42A BH	1	J5D003BE-2,L4, L4		UNIT, FAN			
4190	42 42A 42B	1	ED5D505-15,G1, G2, G1,G2, G1,G2		ASSEMBLY, CABLE			
4200	43	1	J5D005AA-1,L3		UNIT, RESISTOR NETWORK			
4210	AX	1	843058462		SUPPORT,WIRE GUIDE			

STOCKLIST CONTINUED ON SHEET D11

COPYRIGHT @ 2001 LUCENT TECHNOLOGIES
ALL RIGHTS RESERVED

BT13

5ESS SWITCHING EQUIPMENT
SPECIFICATION FOR
MISCELLANEOUS CABINET

DWG SIZE C2 | ISSUE 117

LUCENT TECHNOLOGIES INC | J5D005C-1 | SHEET D10 OF 86

STOCKLIST

ITEM NBR	LIST GROUP CODE	QTY PER CODE	PRODUCT IDENTIFIER	CODE	DESCRIPTION	REFERENCE POSITION	NOTE SYM	NOTE NBR
4250	AY	2	845310507		ASSEMBLY,DOOR		S	
4260	AZ,BR	2	845312826		ASSEMBLY,DOOR		S	
4280	42	OMIT 2	845081942		LABEL,ALARM			
4290	42	OMIT 4	103757977	72B	FUSE,DUMMY			
4300	45	1	J5D005AA-1,L4		UNIT, RESISTOR NETWORK			
4310	41	1	ED5D621-20,G24		ASSEMBLY, CABLE			
4320	1A BF	2	J5D003AU-2,LE, LE		UNIT, FUSE/FILTER			
4330	46 46A 46B 48 48A	1	J1A033GR-1,L1, L1, L1, L1, L1		UNIT, MUSIC ON QUEUE		S	
4340	46,46A, 46B	1	845081215		ASSEMBLY,MODIFIED PLUG		S	
4350	46,46A, 46B	5	845081199		BRACKET,MOUNTING		S	
4360	46,46A, 46B	1	845312792		FITTING ENTRANCE END		S	
4370	46,46A, 46B	1	401012463	KS20785L33	CONNECTOR,STRAIGHT		S	
4380	46,46A, 46B	15	840026835		SCREW,TTF SLOTTED HEX, WASHER HD .216-24 X 5/8 TAPPING TYPE (SWAGE FORM) STEEL ZINC PLATE 289A FINISH		S	
4390	46	1	103289526	30D-49	COUPLER,VOICE		S	86
4395	46A,46B	1	103558961	36A	COUPLER,VOICE		S	93
4410	47 49	1	J1A033GU-1,L1, LWA, L1,LWA		UNIT, MUSIC OR SILENCE ON QUEUE		S	
4420	47,49	4	840026835		SCREW,TTF SLOTTED HEX, WASHER HD .216-24 X 5/8 TAPPING TYPE (SWAGE FORM) STEEL ZINC PLATE 289A FINISH		S	
4430	BM	1	ED5D503-15,G1268		ASSEMBLY, CABLE			
4440	42A 42B 42C 42E BM CD	1	ED5D694-30,G1, G1, G1, G1, G1, G1		ASSEMBLY, BEZEL COVER			
4450	29A 29B 42A 42B 42C 42E BM CD	1	ED5D694-30,G2, G2, G2, G2, G2, G2, G2, G2		ASSEMBLY, BEZEL COVER			
4460	42A 42B	1	ED5D503-15,G1272 G1272		ASSEMBLY, CABLE			
4470	29A	1	ED5D503-15,G1284		ASSEMBLY, CABLE			
4480	29A 29B GB	1	ED5D694-30,G3, G3, G3		ASSEMBLY, BEZEL COVER			
4481	GB	OMIT 1	ED5D694-30,G1		ASSEMBLY, BEZEL COVER			
4490	48,48A	10	840026835		SCREW,TTF SLOTTED HEX, WASHER HD .216-24 X 5/8 TAPPING TYPE (SWAGE FORM) STEEL ZINC PLATE 289A FINISH		S	
4500	48	1	405678400		STRIP,POWER #X999-579 S.J. WABER CO.		S	
4501	48A	1	406754945		STRIP,POWER #850310052 PANEL COMPONENTS CORP.		S	

******** STOCKLIST CONTINUED AT RIGHT *********

STOCKLIST

ITEM NBR	LIST GROUP CODE	QTY PER CODE	PRODUCT IDENTIFIER	CODE	DESCRIPTION	REFERENCE POSITION	NOTE SYM	NOTE NBR
4510	48,48A	1	845622349		BRACKET,POWER STRIP		S	
4515	48,48A	1	406683441		TRANSFORMER,POWER, 230V #ILTJ-1 JEROME INDUSTRY		S	
4520	26A	1	105389548	LSC1U-024/5	SHELF,LIGHTGUIDE		S	26
4521	26A	1	106455355	LSC2U-024/5	SHELF,LIGHTGUIDE		S	26
4530	26A	1	105339899	LT1A-F/F	ORGANIZER,LIGHTGUIDE		S	
4540	26A	4	104384490	12A1	CLAMP,CABLE		S	
4550	9A 55	2	J5D003AU-2,LH, LH		UNIT, FUSE/FILTER			
4555	9C	1	J5D003AU-2,LL		UNIT, FUSE/FILTER			
4560	BT	1	J5D005AA-1,LF		UNIT, RESISTOR NETWORK			
4570	BS	1	406509455		FILTER,AIR MECHANICAL #UAF-262 UNIVERSAL AIR FILTER CO.		S	
4580	BU	1	845311117		SUPPORT,BRACKET			
4590	BU	2	840026835		SCREW,TTF SLOTTED HEX, WASHER HD .216-24 X 5/8 TAPPING TYPE (SWAGE FORM) STEEL ZINC PLATE 289A FINISH		S	
4600	50	1	J5D005AD-1,L4		UNIT, OFFICE ALARM			
4610	51	1	J5D005AD-1,L5		UNIT, OFFICE ALARM			
4620	BW	1	J5D005AD-1,LWC		UNIT, OFFICE ALARM			
4630	BX	1	J5D005AD-1,LE		UNIT, OFFICE ALARM			
4640	51	1	ED5D505-16,G8		ASSEMBLY, CABLE			
4650	52	2	ED5D088-10,G516		LABEL, FUSE			
4660	53	2	ED5D088-10,G517		LABEL, FUSE			
4670	54	1	J5D003FJ-1,L115		UNIT, MODULAR, FUSE/FILTER			
4675	CL	1	J5D003FJ-1,LCH		UNIT, MODULAR, FUSE/FILTER			
4680	55A	1	J5D003FJ-1,LAN		UNIT, MODULAR, FUSE/FILTER			
4690	BY	1	J5D003FJ-1,LC		UNIT, MODULAR, FUSE/FILTER			
4700	BZ	1	ED5D088-10,G475A		LABEL, FUSE			
4710	BZ	1	ED5D088-10,G475B		LABEL, FUSE			
4720	BZ	1	ED5D088-10,G475C		LABEL, FUSE			
4730	22A	2	406663971	WP91768L104	FUSE,.50 AMP FAST ACTING			
4732	23A	1	406708545	WP91768L107	FUSE,2.0 AMP, 250 VOLT VERY FAST ACTING			
4740	23A,CA, GZ	1	406663971	WP91768L104	FUSE,.50 AMP FAST ACTING			
4745	27A	2	406663971	WP91768L104	FUSE,.50 AMP FAST ACTING		S	
4750	9B	1	406599308	WP92458L2	FUSE,1.25 AMP VERY FAST ACTING			
4760	5D	2	406708545	WP91768L107	FUSE,2.0 AMP, 250 VOLT VERY FAST ACTING			

STOCKLIST CONTINUED ON SHEET D12

COPYRIGHT @ 2001 LUCENT TECHNOLOGIES
ALL RIGHTS RESERVED

BT13

5ESS SWITCHING EQUIPMENT
SPECIFICATION FOR
MISCELLANEOUS CABINET

DWG SIZE C2 | ISSUE 117

LUCENT TECHNOLOGIES INC | J5D005C-1 | SHEET D11 OF 86

PRINTED IN U.S.A.

STOCKLIST

ITEM NBR	LIST GROUP CODE	QTY PER CODE	PRODUCT IDENTIFIER	CODE	DESCRIPTION	REFERENCE POSITION	NOTE SYM	NOTE NBR
4770	7A	1	406693895	WP91768L108	FUSE,3.00 AMP FAST ACTING			
4780	17A,42C	4	406693895	WP91768L108	FUSE,3.00 AMP FAST ACTING			
4790	23A	1	406693887	WP91768L110	FUSE,5.00 AMP FAST ACTING			
4800	28A	4	406693895	WP91768L108	FUSE,3.00 AMP FAST ACTING			45
4810	CA	1	ED5D088-10,G520		LABEL, FUSE			
4820	5D	2	ED5D088-10,G518		LABEL, FUSE			
4830	7A	1	ED5D088-10,G519		LABEL, FUSE			
4840	9B 9D 9E	1	ED5D088-10,G521, G521, G521		LABEL, FUSE			
4850	17A	4	ED5D088-10,G522		LABEL, FUSE			
4860	22A	1	ED5D088-10,G523		LABEL, FUSE			
4870	22A	1	ED5D088-10,G531		LABEL, FUSE			
4880	23A	1	ED5D088-10,G529		LABEL, FUSE			
4890	23A	1	ED5D088-10,G530		LABEL, FUSE			
4900	23A	1	ED5D088-10,G528		LABEL, FUSE			
4910	27A	2	ED5D088-10,G520		LABEL, FUSE		S	
4920	28A	4	ED5D088-10,G524		LABEL, FUSE			45
4930	42B	1	ED5D088-10,G525		LABEL, FUSE			
4940	52A	2	ED5D088-10,G526		LABEL, FUSE			
4950	53A	2	ED5D088-10,G527		LABEL, FUSE			
4960	CB	2	ED5D184-76,G2		HARDWARE		S	
4965	16A	1	J5D005CB-1,L1A		UNIT, REMOTE ALARM RELAY			
4967	16B	1	J5D005CB-1,L1B		UNIT, REMOTE ALARM RELAY			
4970	20B CC	4	ED5D507-16,G10, G10		ASSEMBLY, CABLE			
4980	24B	1	J5D003ED-1,LE		UNIT, TRANSMISSION RATE CONVERTER			
4990	24C	1	J5D003ED-1,LG		UNIT, TRANSMISSION RATE CONVERTER			44 45
5000	25B	1	J5D003ED-1,LF		UNIT, TRANSMISSION RATE CONVERTER			
5010	25C	1	J5D003ED-1,LH		UNIT, TRANSMISSION RATE CONVERTER			44 45
5020	29B 29C	1	ED5D693-15,G30B, G30B		ASSEMBLY, CABLE CONNECTORIZED			19
5030	CD CE CK	1	ED5D693-15,G30A, G30A, G30A		ASSEMBLY, CABLE CONNECTORIZED			19
5031	CK	1	ED5D693-15,G30B		ASSEMBLY, CABLE CONNECTORIZED			
5035	GB	OMIT 1	ED5D693-15,G30B		ASSEMBLY, CABLE CONNECTORIZED			
5036	GB	1	ED5D693-15,G30C		ASSEMBLY, CABLE CONNECTORIZED			19
5037	GB	OMIT 1	ED5D693-15,G30A		ASSEMBLY, CABLE CONNECTORIZED			
5040	42B 42C 42D	1	J5D003BE-2,L4A, L4A, L4A		UNIT, FAN			
5050	42B 42C 42D	1	J5D003BE-2,LC, LC, LC		UNIT, FAN		S	
5051	42E 42F 66C 72B	1	J5D003FH-2,L1, L5,LD,LJ, L1,L5,LD,LJ, L1,L5,LD,LJ, L1,L5,LD,LJ		UNIT, FAN			
5052	42E 42F	1	J5D003FH-2,LP, LP		UNIT, FAN			

******** STOCKLIST CONTINUED AT RIGHT *********

STOCKLIST

ITEM NBR	LIST GROUP CODE	QTY PER CODE	PRODUCT IDENTIFIER	CODE	DESCRIPTION	REFERENCE POSITION	NOTE SYM	NOTE NBR
5053	66C 72B	1	J5D003FH-2,LN, LN		UNIT, FAN			
5054	42E 42F	1	J5D003FH-2,L503, LF6,LK4, L503,LF6,LK4		UNIT, FAN			
5055	66C 72B	1	J5D003FH-2,L503, LF8,LK4, L503,LF8,LK4		UNIT, FAN			
5060	42C 42D	1	ED5D693-15,G30, G30		ASSEMBLY, CABLE CONNECTORIZED			
5061	42C 42D 42E 42F	OMIT 1	ED5D693-15,G30A, G30A, G30A, G30A		ASSEMBLY, CABLE CONNECTORIZED			
5062	42E 42F	1	ED5D693-15,G32B, G32B		ASSEMBLY, CABLE CONNECTORIZED			19
5070	42C 42D	1	ED5D693-15,G3, G4, G3,G4		ASSEMBLY, CABLE CONNECTORIZED			
5071	42E 42F	1	ED5D693-15,G15H, G15H		ASSEMBLY, CABLE CONNECTORIZED			
5072	42E 42F	1	ED5D693-15,G16H, G16H		ASSEMBLY, CABLE CONNECTORIZED			
5080	42C 42D	1	ED5D088-12,G39, G39		LABELS, FUSE			
5090	42C 42D	1	ED5D088-12,G40, G40		LABELS, FUSE			
5100	42C 42D	1	ED5D088-12,G41, G41		LABELS, FUSE			
5110	42C 42D	1	ED5D088-12,G42, G42		LABELS, FUSE			
5120	1B	1	ED5D184-74,G7A		ASSEMBLY, CABINET			
5121	1B	1	ED5D184-74,G7B		ASSEMBLY, CABINET			
5130	54	1	J5D003FJ-1,LAQ		UNIT, MODULAR, FUSE/FILTER			
5140	54	1	846917284		LABEL,CAUTION			
5200	60 61	1	ED5D741-70,G1, G1		ASSEMBLY, CABINET			
5201	CM	1	J5D003FJ-1,LCK		UNIT, MODULAR, FUSE/FILTER			
5202	60,61	1	406748145		LUG,TERMINAL #M10-14FLX 3M CO.			
5203	CM	1	J5D003FJ-1,LCP		UNIT, MODULAR, FUSE/FILTER			
5204	60,60C, 61	1	845623677		LABEL,GROUND POINT			
5205	CM	1	J5D003FJ-1,LCR		UNIT, MODULAR, FUSE/FILTER			
5206	60,61	1	405811845		TERMINAL #137 H.H. SMITH			
5210	60,60A, 61,65A, 67,67A, 79	2	846167237		BRACKET,MOUNTING			

STOCKLIST CONTINUED ON SHEET D13

COPYRIGHT @ 2001 LUCENT TECHNOLOGIES
ALL RIGHTS RESERVED

BT13

5ESS SWITCHING EQUIPMENT
SPECIFICATION FOR
MISCELLANEOUS CABINET

DWG SIZE C2 | ISSUE 117

LUCENT TECHNOLOGIES INC | J5D005C-1 | SHEET D12 OF 86

PRINTED IN U.S.A.

STOCKLIST

ITEM NBR	LIST GROUP CODE	QTY PER CODE	PRODUCT IDENTIFIER	CODE	DESCRIPTION	REFERENCE POSITION	NOTE SYM	NOTE NBR
~~5220~~	~~60,60A, 60B,60C, 61~~	~~2~~	~~846167245~~		~~BRACKET,MOUNTING~~			
5230	60,60A, 60B	12	840026835		SCREW,TTF SLOTTED HEX, WASHER HD .216-24 X 5/8 TAPPING TYPE (SWAGE FORM) STEEL ZINC PLATE 289A FINISH			
5240	60,60A, 60B	4	900666256		NUT,TOPLOCK FLANGE CADMIUM FINISH #NF1213S GRIPCO FASTENER CO			
5245	60,60A, 60B,60C, 61	1	847393402		LABEL,CAUTION			
5250	60,60A, 60B	4	814251914	P-42E191	WASHER,PLAIN .090 STEEL 289A FINISH			
5260	60,60A, 60B,61	4	843082470		SPACER			
~~5270~~	~~60,60A, 60B,61~~	~~4~~	~~997244439~~		~~BUSHING,SNAP~~ ~~#SB-750-10~~ ~~HEYMAN MFG CO.~~			
~~5280~~	~~60,60A, 60B,61~~	~~1~~	~~995230927~~		~~BUSHING,SNAP~~ ~~#SB-500-S~~ ~~HEYMAN MFG CO~~			
~~5290~~	~~60,60A, 60B,60C, 61~~	~~1~~	~~845309848~~		~~ASSEMBLY,CABLE SUPPORT~~			
5300	60,60A, 60B,60C	2	845081991		LABEL,ESD			
5310	60C	3	405701756		TERMINAL,LUG #M8-14R/SX 3M CO.			
5330	61	4	900666256		NUT,TOPLOCK FLANGE CADMIUM FINISH #NF1213S GRIPCO FASTENER CO			
5340	61	4	843084385		SCREW,HEXAGON HEAD CAP .500-13 X 5 3/4			
5350	61	4	814251914	P-42E191	WASHER,PLAIN .090 STEEL 289A FINISH			
5360	61	1	J5D003AJ-1,L1, L2		PANEL, +48V FUSE			
5370	61	48	103757977	72B	FUSE,DUMMY			
~~5380~~	~~61~~	~~1~~	~~J86905A-1,L3, L6~~		~~PANEL, CONVERTER~~		~~S~~	
~~5385~~	~~CJ~~	~~1~~	~~ED5D741-70,G8~~		~~ASSEMBLY, CABINET~~		~~S~~	
~~5386~~	~~CJ~~	~~1~~	~~ED5D744-70,G6~~		~~TREATMENT, CABINET EMC~~		~~S~~	
~~5390~~	~~62~~	~~1~~	~~ED5D741-70,G2~~		~~ASSEMBLY, CABINET~~		~~S~~	
5400	63,66	1	106925183	406B	MODULE,CIRCUIT CLEI = E5PQAFYA			
5410	63,64,66	2	840058580		SCREW,PAN HEAD MACHINE .138-32 X 5/16 STEEL 289A FINISH			
5420	63,66	1	847146875		ASSEMBLY,INDICATOR STRIP FAN, FUSE			
5425	64	1	847146883		ASSEMBLY,INDICATOR STRIP PDP/CONV, FUSE			
~~5430~~	~~63,64,66~~	~~1~~	~~847035755~~		~~ASSEMBLY,INDICATOR STRIP~~			
5440	64	1	107009300	406B2	MODULE,CIRCUIT			
5450	GF	1	ED5D734-14,G19		CABLE, MFFU POWER & ALARM			19
~~5460~~	~~64 DE DF~~	~~1~~	~~ED5D734-14,G17, G17, G17~~		~~CABLE, MFFU POWER & ALARM~~			
5465	GC	OMIT 1	ED5D734-14,G17		CABLE, MFFU POWER & ALARM			
5466	GG	1	ED5D734-14,G45		CABLE, MFFU POWER & ALARM			19

******** STOCKLIST CONTINUED AT RIGHT *********

STOCKLIST

ITEM NBR	LIST GROUP CODE	QTY PER CODE	PRODUCT IDENTIFIER	CODE	DESCRIPTION	REFERENCE POSITION	NOTE SYM	NOTE NBR
5470	66 66B	1	ED5D734-14,G15, G15		CABLE, MFFU POWER & ALARM			
5471	66 66B	OMIT 1	ED5D734-14,G19, G19		CABLE, MFFU POWER & ALARM			
5485	44B,65, 65A,67, 67A,67B	2	845081199		BRACKET,MOUNTING			
5490	65,67	1	405686783	WP91652L20	INVERTER DC-AC			
5491	65A,67A	1	407106814	WP91652L20A	INVERTER			
5495	79	1	407117266	WP91652L30A	INVERTER			50
5500	44B,65, 65A,67, 67A,67B, 79	2	843064403		FITTING,END ENTRANCE			
5510	44B,65, 65A,67, 67A,67B, 79	3	401012463	KS20785L33	CONNECTOR,STRAIGHT			
5520	44B,65, 65A,67, 67A,67B, 79	1	996182416		CONDUIT FLEX-ROUND STEEL 1/2 INCH NATIONAL 1 FOOT, 6 INCHES LONG APPROX.			
5530	44B,65, 65A,67, 67A,67B, 79	1	845311968		BASE,RACEWAY			
5540	44B,65, 65A,67, 67A,67B, 79	1	845311976		COVER,RACEWAY			
~~5560~~	~~65,65A, 67,67A~~	~~12~~	~~840026835~~		~~SCREW,TTF SLOTTED HEX, WASHER HD~~ ~~.216-24 X 5/8 TAPPING TYPE (SWAGE FORM) STEEL ZINC PLATE 289A FINISH~~			
5570	41A 41B 44A 44B 65 65A 65B 67B	1	ED5D621-20,G24, G24, G24, G24, G24, G24, G24, G24		ASSEMBLY, CABLE			
5580	66,66B, 72,72A	2	843078015		GUIDE			
5590	66,66B, 66C,72, 72A,72B	1	845311117		SUPPORT,BRACKET			
5600	66,66B, 72,72A	8	840026835		SCREW,TTF SLOTTED HEX, WASHER HD .216-24 X 5/8 TAPPING TYPE (SWAGE FORM) STEEL ZINC PLATE 289A FINISH			
5610	66 66B 72 72A	1	J5D003BE-2,L4A, L4A, L4A, L4A		UNIT, FAN			

STOCKLIST CONTINUED ON SHEET D14

COPYRIGHT @ 2001 LUCENT TECHNOLOGIES
ALL RIGHTS RESERVED

BT13

5ESS SWITCHING EQUIPMENT
SPECIFICATION FOR
MISCELLANEOUS CABINET

DWG SIZE C2 | ISSUE 117

LUCENT TECHNOLOGIES INC | J5D005C-1 | SHEET D13 OF 86

PRINTED IN U.S.A.

STOCKLIST

ITEM NBR	LIST GROUP CODE	QTY PER CODE	PRODUCT IDENTIFIER	CODE	DESCRIPTION	REFERENCE POSITION	NOTE SYM	NOTE NBR
5620	66 66B 72 72A	1	J5D003BE-2,LC, LC, LC, LC		UNIT, FAN		S	
5630	66 66B 72 72A	1	ED5D088-12,G39, G39, G39, G39		LABELS, FUSE			
5640	66 66B 72 72A	1	ED5D088-12,G40, G40, G40, G40		LABELS, FUSE			
5650	66 66B 72 72A	1	ED5D088-12,G41, G41, G41, G41		LABELS, FUSE			
5660	66 66B 72 72A	1	ED5D088-12,G42, G42, G42, G42		LABELS, FUSE			
5670	68 69	1	J1A033GR-1,L1, L1		UNIT, MUSIC ON QUEUE		S	
5680	68,83	1	847022852		ASSEMBLY,OUTLET STRIP		*/	
5690	68,83	3	845081199		BRACKET,MOUNTING		*/	
5710	68,83	1	401012463	KS20785L33	CONNECTOR,STRAIGHT		*/	
5720	68	6	840026835		SCREW,ITF SLOTTED HEX, WASHER HD .216-24 X 5/8 TAPPING TYPE (SWAGE FORM) STEEL ZINC PLATE 289A FINISH		*/	
5730	68,83	3	840059059		SCREW,PAN HEAD MACHINE .164-32 X 5/16 STEEL 289A FINISH		*/	
5740	68,83	4	804236347	P-423634	WASHER,EXTERNAL TOOTH LOCK .190 STEEL 289A FINISH		*/	
5750	69	1	406754945		STRIP,POWER #850310052 PANEL COMPONENTS CORP.		*/	
5760	69	4	840026835		SCREW,ITF SLOTTED HEX, WASHER HD .216-24 X 5/8 TAPPING TYPE (SWAGE FORM) STEEL ZINC PLATE 289A FINISH		*/	
5770	41B,44B, 65A,65B, 67A,67B, 69,79	2	840059059		SCREW,PAN HEAD MACHINE .164-32 X 5/16 STEEL 289A FINISH		*/	
5780	44B,67B, 69	5	804236347	P-423634	WASHER,EXTERNAL TOOTH LOCK .190 STEEL 289A FINISH		*/	
5781	41B,65B	2	804236347	P-423634	WASHER,EXTERNAL TOOTH LOCK .190 STEEL 289A FINISH			
5782	44B,67B	3	840059042		SCREW,PAN HEAD MACHINE .164-32 X 1/4 STEEL 289A FINISH			
5790	69	1	406683441		TRANSFORMER,POWER, 230V #ILTJ-1 JEROME INDUSTRY		S	
5795	68	1	103558961	36A	COUPLER,VOICE		S	93
5800	CF	OMIT 1	ED5D184-74,G7A		ASSEMBLY, CABINET			
5810	CF	1	ED5D184-74,G7B		ASSEMBLY, CABINET			
5820	CG	OMIT 1	ED5D184-74,G7		ASSEMBLY, CABINET			
5830	CG	1	ED5D184-74,G7B		ASSEMBLY, CABINET			
5850	CH	OMIT 1	ED5D184-74,G7B		ASSEMBLY, CABINET			
5860	CH	1	ED5D184-74,G10B		ASSEMBLY, CABINET			
5870	42D 42F CK	1	ED5D694-30,G1, G1, G1		ASSEMBLY, BEZEL COVER			
5880	29C	1	ED5D694-30,G3		ASSEMBLY, BEZEL COVER			

******** STOCKLIST CONTINUED AT RIGHT *********

STOCKLIST

ITEM NBR	LIST GROUP CODE	QTY PER CODE	PRODUCT IDENTIFIER	CODE	DESCRIPTION	REFERENCE POSITION	NOTE SYM	NOTE NBR
5890	29C 42D 42F CK	1	ED5D694-30,G4, G4, G4, G4		ASSEMBLY, BEZEL COVER			
5900	29C,42D, CK	1	405811845		TERMINAL #137 H.H. SMITH			
5910	29C,42D, CK	1	406748145		LUG,TERMINAL #M10-14FLX 3M CO.			
5920	29C,42D, 42E,42F, CK	1	845623677		LABEL,GROUND POINT			
5930	29C,42D, CK	1	846917284		LABEL,CAUTION			
5940	29C,42D, CK	1	846917300		LABEL,CAUTION			
5941	42D,42E, 42F,CK	1	847393402		LABEL,CAUTION			
5950	54,60,61	1	846923290		LABEL,CAUTION			
5955	54	1	847152014		LABEL,INFORMATION			
5960	41B,44B, 65A,65B, 67A,67B, 79	3	996515615		CABLE,CONNECTOR #RCC-21 THOMAS & BETTS CORP.			46
5970	41B,44B, 65,65A, 65B,67, 67A,67B	1	401010426	KS-20747	WIRE 12 GA SOLID 1 CONDUCTOR GREEN TYPE THW			46
5980	41B,44B, 65,65A, 65B,67, 67A,67B	1	401010418	KS-20747	WIRE 12 GA SOLID 1 CONDUCTOR WHITE TYPE THW			46
5990	41B,44B, 65,65A, 65B,67, 67A,67B	1	401010384	KS-20747	WIRE 12 GA SOLID 1 CONDUCTOR BLACK TYPE THW			46
6000	GL	5	843082439		LABEL			
6010	68,83	2	995829660		LUG,TERMINAL STA-KON #C71 THOMAS & BETTS CO.			47
6020	68,83	1	401010426	KS-20747	WIRE 12 GA SOLID 1 CONDUCTOR GREEN TYPE THW			47
6030	41B,44B, 65A,65B, 67A,67B, 79	4	804236362	P-423636	WASHER,EXTERNAL TOOTH LOCK .250 STEEL 289A FINISH			
6050	68,83	6	804236362	P-423636	WASHER,EXTERNAL TOOTH LOCK .250 STEEL 289A FINISH			
6060	68,83	6	996515615		CABLE,CONNECTOR #RCC-21 THOMAS & BETTS CORP.			
6070	70,72	2	847146875		ASSEMBLY,INDICATOR STRIP FAN, FUSE			

STOCKLIST CONTINUED ON SHEET D15

COPYRIGHT @ 2001 LUCENT TECHNOLOGIES
ALL RIGHTS RESERVED

BT13

5ESS SWITCHING EQUIPMENT
SPECIFICATION FOR
MISCELLANEOUS CABINET

DWG SIZE C2 | ISSUE 117

LUCENT TECHNOLOGIES INC | J5D005C-1 | SHEET D14 OF 86

PRINTED IN U.S.A.

STOCKLIST

ITEM NBR	LIST GROUP CODE	QTY PER CODE	PRODUCT IDENTIFIER	CODE	DESCRIPTION	REFERENCE POSITION	NOTE SYM	NOTE NBR
6075	71	2	847146883		ASSEMBLY,INDICATOR STRIP PDP/CONV, FUSE			
6080	GJ	1	ED5D734-14,G20		CABLE, MFFU POWER & ALARM			19
6090	70,72	2	106925183	406B	MODULE,CIRCUIT CLEI = E5PQAFYA			
6100	70,71,72	4	840058580		SCREW,PAN HEAD MACHINE .138-32 X 5/16 STEEL 289A FINISH			
6110	71 DL DM	1	ED5D734-14,G18, G18, G18		CABLE, MFFU POWER & ALARM			
6115	GD	OMIT 1	ED5D734-14,G18		CABLE, MFFU POWER & ALARM			
6116	GH	1	ED5D734-14,G46		CABLE, MFFU POWER & ALARM			19
6120	71	2	107009300	406B2	MODULE,CIRCUIT			
6128	66C 72A 72B	OMIT 1	ED5D734-14,G20, G20, G20		CABLE, MFFU POWER & ALARM			
6130	72 72A	1	ED5D734-14,G16, G16		CABLE, MFFU POWER & ALARM			
6131	72 72A	OMIT 1	ED5D734-14,G20, G20		CABLE, MFFU POWER & ALARM			
6132	72B	1	ED5D734-14,G40		CABLE, MFFU POWER & ALARM			19
6133	66C	1	ED5D734-14,G39		CABLE, MFFU POWER & ALARM			
6134	72B	OMIT 1	ED5D734-14,G20		CABLE, MFFU POWER & ALARM			
6135	66C	OMIT 1	ED5D734-14,G19		CABLE, MFFU POWER & ALARM			
6140	66 66B 72 72A	1	ED5D693-15,G3, G3, G3, G3		ASSEMBLY, CABLE CONNECTORIZED			
6150	66 66B 72 72A	1	ED5D693-15,G4, G4, G4, G4		ASSEMBLY, CABLE CONNECTORIZED			
6151	66C 72B	1	ED5D693-15,G15H, G15H		ASSEMBLY, CABLE CONNECTORIZED			
6152	66C 72B	1	ED5D693-15,G16H, G16H		ASSEMBLY, CABLE CONNECTORIZED			
6160	60A	1	ED5D741-70,G1A		ASSEMBLY, CABINET			
6170	60B	1	ED5D741-70,G1B		ASSEMBLY, CABINET			
6180	60A 60B	2	ED5D695-11,G1327 G1327		LABELS, CABINET ADDRESS			
6181	60C	4	901249177		LABEL,DESIGNATION		*	25 49
6190	62A	1	ED5D741-70,G2A		ASSEMBLY, CABINET		S	
6200	CP	1	J5D005AD-1,LF		UNIT, OFFICE ALARM			
6210	60C	1	847265733		ASSEMBLY,FRAME			
6300	56	1	J1C267A-1,L11		CIRCUIT, 15A ANNOUNCEMENT			
6310	94, 97,98,CQ	2 1	406599308	WP92458L2	FUSE,1.25 AMP VERY FAST ACTING		*/	
6330	86,87	1	106868250	BLD3	PACK,CIRCUIT CLEI = XCPQACVA			
6340	58	1	107019648	400B	MODULE, CIRCUIT CLEI = XCPQADZA			
6350	59	1	107037087	BLD4	PACK,CIRCUIT CLEI = XCPQAEBA			
6360	73	1	107107864	BLD5	PACK,CIRCUIT CLEI = XCDQAB6N			
6370	74	1	107107872	BLD20	PACK,CIRCUIT CLEI = XCDQAB7N			

******** STOCKLIST CONTINUED AT RIGHT *********

STOCKLIST

ITEM NBR	LIST GROUP CODE	QTY PER CODE	PRODUCT IDENTIFIER	CODE	DESCRIPTION	REFERENCE POSITION	NOTE SYM	NOTE NBR
6380	75	1	107107880	BLD21	PACK,CIRCUIT CLEI = XCDQAB8N			
6390	76	1	107107898	BLD22	PACK,CIRCUIT CLEI = XCDQAB9N		S	
6400	77	1	107107906	BLD23	PACK,CIRCUIT CLEI = XCDQACAN		S	
6410	78	1	J1C273A-1,L1		CIRCUIT, 16A ANNOUNCEMENT			
6411	78 93 93A	1	ED5D505-10,G78, G78, G78		CABLE, CONNECTING INFORMATION			
6420	78,88, 91A,93, 93A,96, 107	1	406708545	WP91768L107	FUSE,2.0 AMP, 250 VOLT VERY FAST ACTING		*/	
6430	CQ GR	1 2	ED5D088-10,G615, ED5D088-10,G615		LABEL, FUSE		*/	
6440	CR	1	ED5D088-10,G616		LABEL, FUSE		*/	
6450	CS GS	1 2	ED5D088-12,G92, ED5D088-12,G92		LABELS, FUSE		*/	
6460	CT	1	ED5D088-12,G93		LABELS, FUSE		*/	
6470	56,78,94, 97,98,GZ	2	847399078		BRACKET,MOUNTING		*/	
6480	56,78,94, 96,97,98, GZ	4	901254490		SCREW,FLAT HEAD .216-24 X 1/2 LG, STEEL 289A ZINC CHROMATE FINISH		*/	
6490	CU	2	843082405		BRACKET,MOUNTING		*/	
6492	CU	OMIT 2	846167237		BRACKET,MOUNTING			
6494	CU	OMIT 2	846167245		BRACKET,MOUNTING			
6510	80	1	NJ00508F-1,L2, LA		UNIT, REMOTE TELEMETRY		S	
6520	80	1	NE00535-30,G5		ASSEMBLY, CABLE		S	
6530	80	1	J5D005CB-1,L2		UNIT, REMOTE ALARM RELAY		S	
6540	80 82	1	ED5D505-10,G28A, G28A		CABLE, CONNECTING INFORMATION		S	
6550	80 82	1	NE00535-30,G3, G8, G3,G8		ASSEMBLY, CABLE		S	
6580	82	1	NJ00508E-1,L2, LA		UNIT, CENTRAL TELEMETRY		S	
6590	82	1	NE00312-31,G2		PANEL, AUDIBLE ALARM		S	
6600	82	1	NE00535-30,G5, G6		ASSEMBLY, CABLE		S	
6800	DA	1	847265758		KIT,CABINET DOOR ASSY (EMC) 5ESS		S	
6810	DB	1	847265741		KIT,CABINET DOOR ASSY(NON-EMC) 5ESS		S	
6820	DC	1	847272861		KIT,INDICATOR (FAN/FUSE, EMC)		S	
6830	DD	1	847265766		KIT,INDICATOR (FAN/FUSE, NEMC)		S	

STOCKLIST CONTINUED ON SHEET D16

COPYRIGHT @ 2001 LUCENT TECHNOLOGIES
ALL RIGHTS RESERVED

BT13

5ESS SWITCHING EQUIPMENT
SPECIFICATION FOR
MISCELLANEOUS CABINET

DWG SIZE C2 | ISSUE 117

LUCENT TECHNOLOGIES INC | J5D005C-1 | SHEET D15 OF 86

PRINTED IN U.S.A.

STOCKLIST

ITEM NBR	LIST GROUP CODE	QTY PER CODE	PRODUCT IDENTIFIER	CODE	DESCRIPTION	REFERENCE POSITION	NOTE SYM	NOTE NBR
6840	DE	1	847306651		KIT,INDICATOR (FUSE/PDP, EMC)		S	
6850	DF	1	847306644		KIT,INDICATOR (FUSE/PDP, NEMC)		S	
6860	DC,DE,DG	1	847306636		KIT,INDICATOR (BLANK, EMC)		S	
6870	DD,DF,DH	1	847306628		KIT,INDICATOR (BLANK, NEMC)		S	
6880	DJ	1	847337557		KIT,JUNCTION NON-UNITIZED (NEMC)		*	
6890	DK	1	847337573		KIT,JUNCTION NON-UNITIZED (EMC)		*	
6900	DL	2	847306651		KIT,INDICATOR (FUSE/PDP, EMC)		S	
6910	DM	2	847306644		KIT,INDICATOR (FUSE/PDP, NEMC)		S	
6920	DN	2	847272861		KIT,INDICATOR (FAN/FUSE, EMC)		S	
6930	DO	2	847265766		KIT,INDICATOR (FAN/FUSE, NEMC)		S	
6940	FA	2	840026835		SCREW,TTF SLOTTED HEX, WASHER HD .216-24 X 5/8 TAPPING TYPE (SWAGE FORM) STEEL ZINC PLATE 289A FINISH			
6950	FB	4	840026835		SCREW,TTF SLOTTED HEX, WASHER HD .216-24 X 5/8 TAPPING TYPE (SWAGE FORM) STEEL ZINC PLATE 289A FINISH			
6960	FC,GP	6	840026835		SCREW,TTF SLOTTED HEX, WASHER HD .216-24 X 5/8 TAPPING TYPE (SWAGE FORM) STEEL ZINC PLATE 289A FINISH			
6970	DR,DV	8	840026835		SCREW,TTF SLOTTED HEX, WASHER HD .216-24 X 5/8 TAPPING TYPE (SWAGE FORM) STEEL ZINC PLATE 289A FINISH			
6980	FE	10	840026835		SCREW,TTF SLOTTED HEX, WASHER HD .216-24 X 5/8 TAPPING TYPE (SWAGE FORM) STEEL ZINC PLATE 289A FINISH			
6990	FF	12	840026835		SCREW,TTF SLOTTED HEX, WASHER HD .216-24 X 5/8 TAPPING TYPE (SWAGE FORM) STEEL ZINC PLATE 289A FINISH			
7000	FG	15	840026835		SCREW,TTF SLOTTED HEX, WASHER HD .216-24 X 5/8 TAPPING TYPE (SWAGE FORM) STEEL ZINC PLATE 289A FINISH			
7010	FH	16	840026835		SCREW,TTF SLOTTED HEX, WASHER HD .216-24 X 5/8 TAPPING TYPE (SWAGE FORM) STEEL ZINC PLATE 289A FINISH			
7020	FI	2	840058580		SCREW,PAN HEAD MACHINE .138-32 X 5/16 STEEL 289A FINISH			
7030	FJ	4	840058580		SCREW,PAN HEAD MACHINE .138-32 X 5/16 STEEL 289A FINISH			
7040	FK	14	840026835		SCREW,TTF SLOTTED HEX, WASHER HD .216-24 X 5/8 TAPPING TYPE (SWAGE FORM) STEEL ZINC PLATE 289A FINISH		*/	
7080	FO	14	901271031		SCREW,HEXAGONAL WASHER #M6X16 PHILLIPS ACR 2		*/	
7090	91A, 93A,102, FP	4 2 2	901271031		SCREW,HEXAGONAL WASHER #M6X16 PHILLIPS ACR 2			
7100	FQ	4	901271031		SCREW,HEXAGONAL WASHER #M6X16 PHILLIPS ACR 2			
7110	99,104, FR,GQ	6	901271031		SCREW,HEXAGONAL WASHER #M6X16 PHILLIPS ACR 2			
7120	83A,100, DS,DW	8	901271031		SCREW,HEXAGONAL WASHER #M6X16 PHILLIPS ACR 2			

******** STOCKLIST CONTINUED AT RIGHT *********

STOCKLIST

ITEM NBR	LIST GROUP CODE	QTY PER CODE	PRODUCT IDENTIFIER	CODE	DESCRIPTION	REFERENCE POSITION	NOTE SYM	NOTE NBR
7130	FT	10	901271031		SCREW,HEXAGONAL WASHER #M6X16 PHILLIPS ACR 2			
7140	FU	12	901271031		SCREW,HEXAGONAL WASHER #M6X16 PHILLIPS ACR 2			
7150	FV	15	901271031		SCREW,HEXAGONAL WASHER #M6X16 PHILLIPS ACR 2			
7160	FW	16	901271031		SCREW,HEXAGONAL WASHER #M6X16 PHILLIPS ACR 2			
7200	79	A/R	401010426	KS-20747	WIRE 12 GA SOLID 1 CONDUCTOR GREEN TYPE THW GREEN, TYPE THW			46
7210	79	A/R	401010418	KS-20747	WIRE 12 GA SOLID 1 CONDUCTOR WHITE TYPE THW WHITE, TYPE THW			46
7220	79	A/R	401010384	KS-20747	WIRE 12 GA SOLID 1 CONDUCTOR BLACK TYPE THW BLACK, TYPE THW			46
7230	81	1	847488236		KIT,DESK BASE			
7231	81	OMIT 2	846167245		BRACKET,MOUNTING			
7232	81	OMIT 12	840026835		SCREW,TTF SLOTTED HEX, WASHER HD .216-24 X 5/8 TAPPING TYPE (SWAGE FORM) STEEL ZINC PLATE 289A FINISH			
7240	CV	1	J5D003FJ-1,LCK, LCR		UNIT, MODULAR, FUSE/FILTER			
7265	FX	38	840026835		SCREW,TTF SLOTTED HEX, WASHER HD .216-24 X 5/8 TAPPING TYPE (SWAGE FORM) STEEL ZINC PLATE 289A FINISH			
7270	FY	38	901271031		SCREW,HEXAGONAL WASHER #M6X16 PHILLIPS ACR 2			
7280	DP	1	847272879		KIT,EMC FRAME ADDITION		S	
7290	GA	1	J5D003FJ-1,LCP		UNIT, MODULAR, FUSE/FILTER			
7300	92	4	848317962		BRACKET,MOUNTING		X/	
7310	92	2	406599324	WP92458L11	FUSE,10.0 AMP VERY FAST ACTING		X/	
7320	92	2	ED5D088-12,G277		LABELS, FUSE		X/	
7330	92	18	901271031		SCREW,HEXAGONAL WASHER #M6X16 PHILLIPS ACR 2		X/	
7340	GK	5	843082421		LABEL			
9000	84	2	407608660	WP93388L10	INVERTER,DIRECT CURRENT			
9010	84	2	407608728	WP93388L12	BRACKET,MOUNTING SQUARE D COMPANY			
9030	GE	1	406922583		BOX,OUTLET #52151-1/2&3/4 STEEL CITY			102
9035	GE	OMIT 1	406922583		BOX,OUTLET #52151-1/2&3/4 STEEL CITY			

STOCKLIST CONTINUED ON SHEET D17

COPYRIGHT @ 2001 LUCENT TECHNOLOGIES
ALL RIGHTS RESERVED

BT13

5ESS SWITCHING EQUIPMENT
SPECIFICATION FOR
MISCELLANEOUS CABINET

DWG SIZE C2 | ISSUE 117

LUCENT TECHNOLOGIES INC | J5D005C-1 | SHEET D16 OF 86

PRINTED IN U.S.A.

STOCKLIST

ITEM NBR	LIST GROUP CODE	QTY PER CODE	PRODUCT IDENTIFIER	CODE	DESCRIPTION	REFERENCE POSITION	NOTE SYM	NOTE NBR
9060	84,85	2	401012463	KS20785L33	CONNECTOR,STRAIGHT			
9070	84,85	1	996182416		CONDUIT FLEX-ROUND STEEL 1/2 INCH NATIONAL 55.75 INCHES LONG OR EQUIVALENT			46
9080	84	1	996182416		CONDUIT FLEX-ROUND STEEL 1/2 INCH NATIONAL 2.5 INCHES LONG OR EQUIVALENT			46
9090	84,85	3	996515615		CABLE,CONNECTOR #RCC-21 THOMAS & BETTS CORP.			
9100	84,85	1	401010426	KS-20747	WIRE 12 GA SOLID 1 CONDUCTOR GREEN TYPE THW 80 INCHES LONG			46
9110	84,85	1	401010418	KS-20747	WIRE 12 GA SOLID 1 CONDUCTOR WHITE TYPE THW 80 INCHES LONG			46
9120	84,85	1	401010384	KS-20747	WIRE 12 GA SOLID 1 CONDUCTOR BLACK TYPE THW 80 INCHES LONG			46
9140	GE	1	996224754		COVER,CONDUIT BOX #52C1 STEEL CITY PRODUCTS CO.			
9160	84	2	997244033		BUSHING,SNAP #SB-875-11 HEYMAN MFG CO			
9170	84 85	1	ED5D621-20,G24, G24		ASSEMBLY, CABLE			
9180	84	2	401012604	KS20785L83	CONNECTOR,90 DEGREE			
9190	85	1	407608660	WP93388L10	INVERTER,DIRECT CURRENT			
9200	85	1	407608728	WP93388L12	BRACKET,MOUNTING SQUARE D COMPANY			
9210	85	1	997244033		BUSHING,SNAP #SB-875-11 HEYMAN MFG CO			
~~9220~~	~~79A~~	~~1~~	~~407117266~~	~~WP91652L30A~~	~~INVERTER~~			
9221	79B	1	408114825	WP93388L20	INVERTER			
9222	79B	1	408114874	WP93388L22	BRACKET,MOUNTING			
9230	DR,DS	2	846167237		BRACKET,MOUNTING			
9240	5D	1	J5D005AD-1,L10		UNIT, OFFICE ALARM			
9250	5D	1	J5D005AD-1,L20		UNIT, OFFICE ALARM			
9260	5D 8B	2	J5D005AD-1,L30, L30		UNIT, OFFICE ALARM			
9270	DQ	2	848281176		BRACKET,MOUNTING PLATE J5D005C-1, 23" - 25"		X/	
9280	DQ	8	840026835		SCREW,TTF SLOTTED HEX, WASHER HD .216-24 X 5/8 TAPPING TYPE (SWAGE FORM) STEEL ZINC PLATE 289A FINISH		X/	
9290	DV,DW	2	848266698		BRACKET,MOUNTING 23" SHELF		X/	
9300	88	1	ED5D088-12,G274		LABELS, FUSE TEST BUS CONTROL UNIT (TBCU)			
9310	88	4	ED1A238-70,G13		ADAPTER, OFFSET MOUNTING PLATE			
9320	88	32	840026835		SCREW,TTF SLOTTED HEX, WASHER HD .216-24 X 5/8 TAPPING TYPE (SWAGE FORM) STEEL ZINC PLATE 289A FINISH			
9330	88	1	ED5D505-10,G84		CABLE, CONNECTING INFORMATION			
9340	88	1	ED5D505-10,G83		CABLE, CONNECTING INFORMATION			

******** STOCKLIST CONTINUED AT RIGHT *********

STOCKLIST

ITEM NBR	LIST GROUP CODE	QTY PER CODE	PRODUCT IDENTIFIER	CODE	DESCRIPTION	REFERENCE POSITION	NOTE SYM	NOTE NBR
9350	89	1	104021506	SM499	PACK,CIRCUIT DS120 TRANSMIT CONVERTER AND LINE DRIVER/EQUALIZER CLEI = S9TP1A0A			
~~9360~~	~~90~~	~~1~~	~~104021571~~	~~SM500~~	~~PACK,CIRCUIT~~ ~~UNIT CLOCK GENERATOR CIRCUIT~~ ~~CLEI = S9TP1B0A~~			
9361	90A	1	108600032	SM500B	PACK,CIRCUIT TEST BUS UNIT CLEI = S9TPML0A			
9370	88	1	J1C189A-1,L1		UNIT, TEST BUS CONTROL			
9380	91 91A 107	1	ED5D709-30,G20, G20, G20		TRANSLATOR, 3A TUD		X	
9390	91,91A, 107	1	107877193	#NT1B-300V2	UNIT,ISDN NETWORK TERMINATION NT1B-300V2		X	
9400	91,91A, 107	1	104380753	353A	UNIT,POWER		X	
9410	91,91A, 107	1	103786786	D8W-87	CORD 7 FT.		X	
9420	91,91A, 107	1	102269677	M25B-87	CORD 10 FT.		X	
9430	91,91A, 107	1	103905543	M25B-87	CORD 50 FT		X	
~~9440~~	~~91~~	~~1~~	~~401509773~~	~~KS20018L9D~~	~~SHELF~~			
~~9450~~	~~91~~	~~8~~	~~840026835~~		~~SCREW,TTF SLOTTED HEX, WASHER HD~~ ~~.216-24 X 5/8 TAPPING TYPE (SWAGE FORM) STEEL ZINC~~ ~~PLATE 289A FINISH~~			
9460	5D	1	ED5D091-10,G10		LABEL			
9470	5D	1	ED5D091-10,G12		LABEL			
9480	5D	1	ED5D091-10,G13		LABEL			
9490	5D 8B	2	ED5D091-10,G14, G14		LABEL			
9500	GM	1	J5D005AD-1,LF2		UNIT, OFFICE ALARM			
9510	GN	1	J5D005AD-1,LF3		UNIT, OFFICE ALARM			
9520	GO	1	J5D005AD-1,LF6		UNIT, OFFICE ALARM			
9530	93 93A	1	J1C273A-1,L11, L11		CIRCUIT, 16A ANNOUNCEMENT		*/	
9540	GT	1	J1C273A-1,L21		CIRCUIT, 16A ANNOUNCEMENT			
9550	94	1	J1C267A-1,L31		CIRCUIT, 15A ANNOUNCEMENT		*/	
9560	94 CQ CS	2 1 1	ED5D505-10,G86, ED5D505-10,G86, G86		CABLE, CONNECTING INFORMATION			
9570	GU	1	J1C273A-1,L22		CIRCUIT, 16A ANNOUNCEMENT			
9580	GZ	1	J1C273A-1,L30		CIRCUIT, 16A ANNOUNCEMENT		*/	
9590	GV	1	J1C267A-1,L41		CIRCUIT, 15A ANNOUNCEMENT			
9600	GW	1	J1C267A-1,L42		CIRCUIT, 15A ANNOUNCEMENT			
9610	GZ	1	ED5D505-10,G88		CABLE, CONNECTING INFORMATION			
9620	GZ	1	ED5D088-12,G283		LABELS, FUSE			

STOCKLIST CONTINUED ON SHEET D18

COPYRIGHT @ 2001 LUCENT TECHNOLOGIES
ALL RIGHTS RESERVED

BT13

5ESS SWITCHING EQUIPMENT
SPECIFICATION FOR
MISCELLANEOUS CABINET

DWG SIZE C2 | ISSUE 117

LUCENT TECHNOLOGIES INC | J5D005C-1 | SHEET D17 OF 86

PRINTED IN U.S.A.

STOCKLIST

ITEM NBR	LIST GROUP CODE	QTY PER CODE	PRODUCT IDENTIFIER	CODE	DESCRIPTION	REFERENCE POSITION	NOTE SYM	NOTE NBR
9630	96	1	J1C275A-1,L5		ANNC.SYS., J1C275A-1			
9640	96	2	848391561		BRACKET,MOUNTING 17A UNIT TO SHELF			
9650	96	1	ED5D088-12,G281		LABELS, FUSE			
9660	97	1 2	J1C276A-1,L4, J1C276A-1,L6		FRAME, 18A ANNC. SYSTEM			
9670	98	1 2	J1C276A-1,L4, J1C276A-1,L5		FRAME, 18A ANNC. SYSTEM			
9680	97 98	1	ED5D088-12,G282, G282		LABELS, FUSE			
~~9690~~	~~GY~~	~~1~~	~~J1C275A-1,L21~~		~~ANNC.SYS., J1C275A-1~~			
9700	GX	1	J1C275A-1,L22		ANNC.SYS., J1C275A-1			
9710	97 98	1	ED5D505-10,G87, G87		CABLE, CONNECTING INFORMATION			
9720	99	1	106459563	3000-48VDC-PM	CARRIER,APPARATUS			
9730	99	5	106597826	3811-B1-001	MODEM,DATA TRANSFER			
9740	99	1	106303274	3000-F1-001	PANEL,UNIT SHARED FRONT			
9750	99	2	106308489	3000-F1-010	UNIT,INTERFACE			
9760	99	1	846950111		BRACKET,MOUNTING LEFT			
9770	99	1	846950129		BRACKET,MOUNTING RIGHT			
9780	99	2	406693903	WP91768L112	FUSE,7.00 AMP FAST ACTING			
9790	99	2	ED5D505-10,G89		CABLE, CONNECTING INFORMATION			
9800	99	2	ED5D088-12,G284		LABELS, FUSE			
9810	22A	1	J5D005AB-1,LF3		UNIT, CONVERTER			
9815	HA	1	848518767		KIT,FINAL ASSEMBLY			
9816	HB	1	848518775		KIT,MOUNTING			
9817	HC	1	848518783		KIT,MOUNTING			
9818	HD	1	848518791		KIT,MOUNTING			
9819	100	1	J5D003FJ-1,L110, LD,LN,LCH,LCK, LL2,LL4,LL6		UNIT, MODULAR, FUSE/FILTER			
9820	100	1	847367307		LABEL,CAUTION			
9821	101	2	408180057	IPDSU-M2	MODEM,STAND ALONE 2 1544 KBPS SYNCHRONOUS 1.4" X 6" X 7.5"			104
9822	101	1	848552493		SHELF,MOUNTING STEEL, ZINC PLATE			
9823	101	2	848552485		BRACKET,MOUNTING STEEL, ZINC PLATE			
9824	91A,93A, 101,102	2	848435459		BRACKET,SUPPORT			
9825	91A,93A, 101,102	4	901274498		SCREW,TRILOBE SCREW,THREAD FORMING,FLAT HEAD #M6X16 QUALITY SCREW & NUT CO.			
9826	101	4	901372136		SCREW,THREAD ROLLING PAN HEAD, PHILLIPS ACR 2			
9827	101	2	ED5D507-17,G140		ASSEMBLY, CABLE			105
9828	101	2	406708545	WP91768L107	FUSE,2.0 AMP, 250 VOLT VERY FAST ACTING			
9829	101	1	ED5D088-12,G333, G334,G335,G336, G337,G338,G339, G340,G341,G342, G343,G344		LABELS, FUSE			106
9830	101	2	848556023		LABEL,IDENTIFICATION			106
9831	101	1	847169208		ROD,ROUND UNIVERSAL SUPPORT ROD (3.0")			

******** STOCKLIST CONTINUED AT RIGHT *********

STOCKLIST

ITEM NBR	LIST GROUP CODE	QTY PER CODE	PRODUCT IDENTIFIER	CODE	DESCRIPTION	REFERENCE POSITION	NOTE SYM	NOTE NBR
9832	101	6	901271031		SCREW,HEXAGONAL WASHER #M6X16 PHILLIPS ACR 2			
9833	101	2	ED3T076-20,G51		ASSEMBLY, CONNECTORIZED SWBD CABLE			
9834	101	2	ED5D507-17,G25C		ASSEMBLY, CABLE			
9835	83A	1	848571717		ASSEMBLY,OUTLET STRIP			
9836	HE	1	ED5D088-12,G351A G351B,G351C		LABELS, FUSE			
9837	105	3	407947290		INTERFACE,RS-232 #TL073A-R2 BLACK BOX			
9838	105	1	848520938		KIT,HARDWARE			
9839	105	1	847325891		KIT,4IN CABLE SUPPORT			
9840	104	1	848587887		BRACKET,MOUNTING STEEL			
9841	102	2	ED5D764-35,G109		WORKSTN, VCDX ADMIN. WORKSTATION			
9842	102	2	406697722		CONVERTER,POWER #IC456A-R2 BLACK BOX CORP			
9843	102	4	848574919		BRACKET,MOUNTING			
9844	93A, 102	4 8	901372219		SCREW M5 .8MM X 10MM THREAD ROLLING HEXAGONAL FLANGE, STEEL			
9845	93A,102	1	848574927		SHELF,MOUNTING			
9846	102	2	ED5D764-35,G102		WORKSTN, VCDX ADMIN. WORKSTATION			
9847	105	1	408358455		CABLE ASSEMBLY,INTERCONNECTING #DS-2113-10 GRAYBAR ELECTRIC			
9848	105	1	408359479		CABLE ASSEMBLY,INTERCONNECTING #DS-2113B-10 GRAYBAR ELECTRIC			
9849	104	2	848349155		PANEL,PATCH			
9850	104	4	901343780		SCREW,THREAD ROLLING HEXAGONAL FLANGE			
9851	104	1	848390167		MOUNTING,CONNECTOR			
9852	104	5	901343335		SCREW,THREAD ROLLING, PAN HEAD			
9853	104	1	ED5D764-35,G19		WORKSTN, VCDX ADMIN. WORKSTATION			
9854	104	1	407946995		CONVERTER,SERIAL #PI035A BLACK BOX			
9855	104	1	848587903		BRACKET,MOUNTING STEEL			
9856	91A,104, 107	4	901372219		SCREW M5 .8MM X 10MM THREAD ROLLING HEXAGONAL FLANGE, STEEL			
9857	104	1	407623586		CABLE #ECM25C-0010-MM BLACK BOX			
9858	104	1	407947027		ADAPTER,CONVERTER #FA080-R2 BLACK BOX			

STOCKLIST CONTINUED ON SHEET D19

COPYRIGHT @ 2001 LUCENT TECHNOLOGIES
ALL RIGHTS RESERVED

BT13

5ESS SWITCHING EQUIPMENT
SPECIFICATION FOR
MISCELLANEOUS CABINET

DWG SIZE C2 | ISSUE 117

LUCENT TECHNOLOGIES INC | J5D005C-1 | SHEET D18 OF 86

PRINTED IN U.S.A.

STOCKLIST

ITEM NBR	LIST GROUP CODE	QTY PER CODE	PRODUCT IDENTIFIER	CODE	DESCRIPTION	REFERENCE POSITION	NOTE SYM	NOTE NBR
9859	104	1	408137289		ADAPTER,CONVERTOR #LE1502A BLACKBOX			
9860	104	1	848587895		BRACKET,MOUNTING STEEL			
9861	104	1	408276350		CABLE #EVNSL03-0010 BLACK BOX			
9862	104	1	401715362		ADAPTER #31-208 AMPHENOL			
9863	104	1	406645846		TERMINATOR,BNC PLUG 1 WATT, 50 OHM, W/O TETHER RP/DS #221629-4 AMP INC			
9864	103	1	ED5D764-35,G10		WORKSTN, VCDX ADMIN. WORKSTATION			
9865	103 106	1	ED5D839-15,G4, G4		ASSEMBLY, POWER CABLE			
9866	103,106	2	406747550	WP91768L112	FUSE,7.0 A 250 V			
9867	103	1	ED5D764-35,G13		WORKSTN, VCDX ADMIN. WORKSTATION			
9868	103	1	ED5D764-35,G18		WORKSTN, VCDX ADMIN. WORKSTATION			
9869	103	1	ED5D764-35,G15		WORKSTN, VCDX ADMIN. WORKSTATION			
9870	103	1	ED5D764-35,G16		WORKSTN, VCDX ADMIN. WORKSTATION			
9871	106	1	848494852		KIT,COMPUTER			
9872	106	1	ED5D764-35,G13		WORKSTN, VCDX ADMIN. WORKSTATION			
9873	91A	1	848496477		PLATE 3A TRANSLATOR MOUNTING			
9874	91A,107	1	848496485		STRAP 3A TRANSLATOR MOUNTING			
9875	91A 107	1	ED5D709-30,GC, GC		TRANSLATOR, 3A TUD			
9876	91A	1	847169208		ROD,ROUND UNIVERSAL SUPPORT ROD (3.0")			
9877	93A	2	848587879		BRACKET,MOUNTING STEEL			
9878	103 106	1	ED5D839-15,G2, G2		ASSEMBLY, POWER CABLE			

******* END OF STOCKLIST *****

JJ

TABLE JJ STOCKLIST ORDERING COMCODES TO INDIVIDUAL/SINGULAR COMCODE CROSS REFERENCE

STOCKLIST ORDERING COMCODE	INDIVIDUAL/ SINGULAR COMCODE	COMMENTS
406663971	406747501	FUSE, .50 AMP WP91768L104
406599308	406747519	FUSE, 1.25 AMP WP92458,L2
406708545	406747527	FUSE, 2.0 AMP WP91768,L107
406693895	406747535	FUSE, 3.0 AMP WP91768,L108
406693887	406747543	FUSE, 5.0 AMP WP91768L110

TABLE AB

FUSE POSITIONS AND ASSIGNMENTS FOR J5D003AU

	ATU	FUSE POS	LOCATION OF FUSE PANEL
LIST E	1	1T,13T	FPPFO (LEVEL 64)
	2	1B,13B	
	3	2T,14T	
	4	2B,14B	
	5	3T,15T	
LIST F	6	3B,15B	FPPFO (LEVEL 64)
	7	4T,16T	
	8	4B,16B	
	9	5T,17T	
	10	5B,17B	
	11	6T,18T	
	12	6B,18B	
	13	7T,19T	
	14	7B,19B	
	15	8T,20T	
	16	8B,20B	
	17	9T,21T	
	18	9B,21B	
	19	10T,22T	
	20	10B,22B	
	21	11T,23T	
	22	11B,23B	
	23	12T,24T	
LIST G	24	12B,24B	FPPFO (LEVEL 64)
	25	1T,13T	FPPF1 (LEVEL 62)
	26	1B,13B	
	27	2T,14T	
	28	2B,14B	
	29	3T,15T	
	30	3B,15B	
	31	4T,16T	
	32	4B,16B	
	33	5T,17T	
	34	5B,17B	
	35	6T,18T	
	36	6B,18B	
	37	7T,19T	
	38	7B,19B	
	39	8T,20T	
	40	8B,20B	
	41	9T,21T	
	42	9B,21B	
	43	10T,22T	
	44	10B,22B	
	45	11T,23T	
	46	11B,23B	
LIST H	47	12T,24T	FPPF1 (LEVEL 62)
	48	12B,24B	
	49	1T,13T	FPPF2 (LEVEL 60)
	50	1B,13B	
	51	2T,14T	
	52	2B,14B	
	53	3T,15T	
	54	3B,15B	

*** CONTINUED ***

COPYRIGHT @ 2001 LUCENT TECHNOLOGIES
ALL RIGHTS RESERVED

BT13

5ESS SWITCHING EQUIPMENT
SPECIFICATION FOR
MISCELLANEOUS CABINET

DWG SIZE C2 | ISSUE 117

LUCENT TECHNOLOGIES INC | J5D005C-1 | SHEET D19 OF 86

PRINTED IN U.S.A.

** CONTINUED **
TABLE AB
FUSE POSITIONS AND ASSIGNMENTS FOR J5D003AU

	55	4T,16T	
	56	4B,16B	
	57	5T,17T	
	58	5B,17B	
	59	6T,18T	
	60	6B,18B	
	61	7T,19T	
	62	7B,19B	
	63	8T,20T	
	64	8B,20B	
	65	9T,21T	
	66	9B,21B	
	67	10T,22T	
	68	10B,22B	
	69	11T,23T	
	70	11B,23B	
	71	12T,24T	
	72	12B,24B	
LIST I MFR DISC	73	1T,13T	FPPF3 (LEVEL 58)
	74	1B,13B	
	75	2T,14T	
	76	2B,14B	
	77	3T,15T	
	78	3B,15B	
LIST J	79	4T,16T	FPPF3 (LEVEL 58)
	80	4B,16B	
	81	5T,17T	
	82	5B,17B	
	83	6T,18T	
	84	6B,18B	
	85	7T,19T	
	86	7B,19B	
	87	8T,20T	
	88	8B,20B	
	89	9T,21T	
	90	9B,21B	
	91	10T,22T	
	92	10B,22B	
	93	11T,23T	
	94	11B,23B	
	95	12T,24T	
	96	12B,24B	
LIST J	97	1T,13T	FPPF4 (LEVEL 56)
	98	1B,13B	
	99	2T,14T	
	100	2B,14B	
	101	3T,15T	
	102	3B,15B	
	103	4T,16T	
	104	4B,16B	
	105	5T,17T	
	106	5B,17B	
	107	6T,18T	
	108	6B,18B	
	109	7T,19T	
	110	7B,19B	
	111	8T,20T	
	112	8B,20B	
	113	9T,21T	
	114	9B,21B	
	115	10T,22T	
LIST V	73	1T,13T	FPPF3 (LEVEL 58)
	74	1B,13B	
	75	2T,14T	
	76	2B,14B	
	77	3T,15T	
	78	3B,15B	

TABLE AC

TABLE AC

	DESIGNATION TO BE PRINTED					
	POS 1		POS 2		POS 3	
COMCODE	ABBR	NBR	ABBR	NBR	NBR	LINE
845082247			M	00	00	1
845082254			M	01	00	
845082262			M	02	00	
845082270			M	03	00	
845082288			M	04	00	5
845082296			M	05	00	
845082304			M	06	00	
845082312			M	07	00	
845082320			M	08	00	
845082338			M	09	00	10

TABLE AD

14A RECORDED ANNOUCEMENT UNIT FUSE ASSIGNMENTS FOR J5D003AU

LIST	CHANNEL	FUSE POS	COMMENTS
1ST L27	0	1T	(HOST) CABINET EQUIPPED WITH 14A UNITS ONLY.
1ST L27	1	7T	
2ND L27	0	13T	
2ND L27	1	19T	
3RD L27	0	2T	
3RD L27	1	8T	
4TH L27	0	14T	
4TH L27	1	20T	
5TH L27	0	3T	
5TH L27	1	9T	
6TH L27	0	15T	
6TH L27	1	21T	
7TH L27	0	4T	
7TH L27	1	10T	
8TH L27	0	16T	
8TH L27	1	22T	
9TH L27	0	5T	
9TH L27	1	11T	
10TH L27	0	17T	
10TH L27	1	23T	
11TH L27	0	6T	
11TH L27	1	12T	
12TH L27	0	18T	
12TH L27	1	24T	
13TH L27	0	1B	
13TH L27	1	7B	
14TH L27	0	13B	
14TH L27	1	19B	
15TH L27	0	2B	
15TH L27	1	8B	
16TH L27	0	14B	
16TH L27	1	20B	
17TH L27	0	3B	
17TH L27	1	9B	
18TH L27	0	15B	
18TH L27	1	21B	
1ST L27	0	6T	(HOST) CABINET EQUIPPED WITH ONE OR TWO RES PNL'S AND 14A UNITS.
1ST L27	1	19T	
2ND L27	0	5T	
2ND L27	1	20T	
3RD L27	0	4T	
3RD L27	1	21T	
4TH L27	0	3T	
4TH L27	1	22T	
5TH L27	0	2T	
5TH L27	1	23T	
6TH L27	0	1T	
6TH L27	1	24T	
7TH L27	0	1B	

*** CONTINUED ***

** CONTINUED **
TABLE AD

14A RECORDED ANNOUCEMENT UNIT FUSE ASSIGNMENTS FOR J5D003AU

LIST	CHANNEL	FUSE POS	COMMENTS
7TH L27	1	19B	
8TH L27	0	2B	
8TH L27	1	20B	
1ST L27	0	19T	(HOST) CABINET EQUIPPED WITH THREE RES PNL'S AND 14A UNITS.
1ST L27	1	19B	
2ND L27	0	20T	
2ND L27	1	20B	
3RD L27	0	21T	
3RD L27	1	21B	
4TH L27	0	22T	
4TH L27	1	22B	
5TH L27	0	23T	
5TH L27	1	23B	
6TH L27	0	24T	
6TH L27	1	24B	
1ST L27% L3 OR L17	0	7T	(HOST) CABINET EQUIPPED WITH 14A UNITS AND OTHER UNITS, WITHOUT RES PNL'S.
1ST L27% L3 OR L17	1	18T	
2ND L27% L3 OR L17	0	7B	
2ND L27% L3 OR L17	1	18B	
3RD L27% L3 OR L17	0	8T	
3RD L27% L3 OR L17	1	17T	
4TH L27% L3 OR L17	0	8B	
4TH L27% L3 OR L17	1	17B	
5TH L27% L3 OR L17	0	9T	
5TH L27% L3 OR L17	1	16T	
6TH L27% L3 OR L17	0	9B	
6TH L27% L3 OR L17	1	16B	
7TH L27% L3 OR L17	0	10T	
7TH L27% L3 OR L17	1	15T	
8TH L27% L3 OR L17	0	10B	
8TH L27% L3 OR L17	1	15B	
1ST L27	0	1T	(REMOTE) CABINET EQUIPPED WITH 14A UNITS ONLY.
1ST L27	1	7T	
2ND L27	0	13T	
2ND L27	1	19T	
3RD L27	0	2T	
3RD L27	1	8T	

*** CONTINUED ***

** CONTINUED **
TABLE AD

14A RECORDED ANNOUCEMENT UNIT FUSE ASSIGNMENTS FOR J5D003AU

LIST	CHANNEL	FUSE POS	COMMENTS
4TH L27	0	14T	
4TH L27	1	20T	
5TH L27	0	3T	
5TH L27	1	9T	
6TH L27	0	15T	
6TH L27	1	21T	
7TH L27	0	4T	
7TH L27	1	10T	
8TH L27	0	16T	
8TH L27	1	22T	
9TH L27	0	5T	
9TH L27	1	11T	
10TH L27	0	17T	
10TH L27	1	23T	
11TH L27	0	6T	
11TH L27	1	12T	
12TH L27	0	18T	
12TH L27	1	24T	
1ST LAN	LIU	1B	
2ND LAN	LIU	13B	
3RD LAN	LIU	2B	
4TH LAN	LIU	14B	
5TH LAN	LIU	3B	
6TH LAN	LIU	15B	
7TH LAN	LIU	4B	
8TH LAN	LIU	16B	
9TH LAN	LIU	5B	
10TH LAN	LIU	17B	
11TH LAN	LIU	6B	
12TH LAN	LIU	18B	
1ST L27	0	6T	(REMOTE) CABINET EQUIPPED WITH ONE RES PNL, 14A UNITS AND OTHER UNITS.
1ST L27	1	19T	
2ND L27	0	5T	
2ND L27	1	20T	
3RD L27	0	4T	
3RD L27	1	21T	
4TH L27	0	3T	
4TH L27	1	22T	
5TH L27	0	2T	
5TH L27	1	23T	
6TH L27	0	1T	
6TH L27	1	24T	
1ST LAN	LIU	6B	
2ND LAN	LIU	5B	
3RD LAN	LIU	4B	
4TH LAN	LIU	3B	
5TH LAN	LIU	2B	
6TH LAN	LIU	1B	
1ST L27% L3 OR L17	0	7T	(REMOTE) CABINET EQUIPPED WITH 14A UNITS AND OTHER UNITS, WITHOUT RES PNL.
1ST L27% L3 OR L17	1	18T	
2ND L27% L3 OR L17	0	8T	
2ND L27% L3 OR L17	1	17T	
3RD L27% L3 OR L17	0	9T	
3RD L27% L3 OR L17	1	16T	
4TH L27%	0	10T	

*** CONTINUED ***

** CONTINUED **
TABLE AD

14A RECORDED ANNOUCEMENT UNIT FUSE ASSIGNMENTS FOR J5D003AU

LIST	CHANNEL	FUSE POS	COMMENTS
L3 OR L17			
4TH L27% L3 OR L17	1	15T	
5TH L27% L3 OR L17	0	11T	
5TH L27% L3 OR L17	1	14T	
6TH L27% L3 OR L17	0	12T	
6TH L27% L3 OR L17	1	13T	
1ST LAN	LIU	7B	
2ND LAN	LIU	8B	
3RD LAN	LIU	9B	
4TH LAN	LIU	10B	
5TH LAN	LIU	11B	
6TH LAN	LIU	12B	

TABLE AE
RESISTOR PANEL AND 13A RECORDED ANNOUCEMENT UNIT FUSE ASSIGNMENTS FOR J5D003AU.

LIST	FUSE POS
1ST L3	68-7T,8T
OR 17	68-7B,8B
2ND L3	68-17T,18T
OR 17	68-17B,18B
3RD L3	68-1T,2T
OR 17	68-1B,2B
W/O L7	
4TH L3	68-23T,24T
OR 17	68-23B,24B
OR	
3RD L3	
OR 17	
WITH L7	
1ST L7	68-1T
2ND L7	68-24T
3RD L7	68-13T
4TH L7	68-12T

COPYRIGHT @ 2001 LUCENT TECHNOLOGIES
ALL RIGHTS RESERVED

BT13

5ESS SWITCHING EQUIPMENT
SPECIFICATION FOR
MISCELLANEOUS CABINET

DWG SIZE C2 | ISSUE 117

LUCENT TECHNOLOGIES INC | J5D005C-1 | SHEET D20 OF 86

PRINTED IN U.S.A.

TABLE AF

TABLE AF				
DESIGNATIONS TO BE PRINTED				
ED5D695-10	POS 1		POS 2	
GROUPS	ABBR	NBR	ABBR	NBR
1316 - 1326 ARE RESERVED				
1327			M	00
1328			M	01
1329			M	02
1330			M	03
1331			M	04
1332			M	05
1333			M	06
1334			M	07
1335			M	08
1336			M	09
1337			M	10
1338			M	11

TABLE AG

14A RECORDED ANNOUCEMENT UNIT FUSE ASSIGNMENTS FOR J5D003FJ-1			
LIST	CHANNEL	FUSE POS	COMMENTS
1ST L27A	0	014A	(HOST) CABINET EQUIPPED WITH 14A UNITS ONLY.
1ST L27A	1	050A	
2ND L27A	0	118A	
2ND L27A	1	159A	
3RD L27A	0	014C	
3RD L27A	1	050C	
4TH L27A	0	118C	
4TH L27A	1	159C	
5TH L27A	0	023A	
5TH L27A	1	059A	
6TH L27A	0	127A	
6TH L27A	1	168A	
7TH L27A	0	023C	
7TH L27A	1	059C	
8TH L27A	0	127C	
8TH L27A	1	168C	
9TH L27A	0	032A	
9TH L27A	1	073A	
10TH L27A	0	141A	
10TH L27A	1	177A	
11TH L27A	0	032C	
11TH L27A	1	073C	
12TH L27A	0	141C	
12TH L27A	1	177C	
13TH L27A	0	014B	
13TH L27A	1	050B	
14TH L27A	0	118B	
14TH L27A	1	159B	
15TH L27A	0	014D	
15TH L27A	1	050D	
16TH L27A	0	118D	
16TH L27A	1	159D	
17TH L27A	0	023B	
17TH L27A	1	059B	
18TH L27A	0	127B	

*** CONTINUED ***

** CONTINUED **

TABLE AG

18TH L27A	1	168B	
1ST L27A	0	032C	(HOST) CABINET EQUIPPED WITH ONE OR TWO RES PNL'S AND 14A UNITS.
1ST L27A	1	159A	
2ND L27A	0	032A	
2ND L27A	1	159C	
3RD L27A	0	023C	
3RD L27A	1	168A	
4TH L27A	0	023A	
4TH L27A	1	168C	
5TH L27A	0	014C	
5TH L27A	1	177A	
6TH L27A	0	014A	
6TH L27A	1	177C	
7TH L27A	0	014B	
7TH L27A	1	159B	
8TH L27A	0	014D	
8TH L27A	1	159D	
1ST L27A	0	159A	(HOST) CABINET EQUIPPED WITH THREE RES PNL'S AND 14A UNITS.
1ST L27A	1	159B	
2ND L27A	0	159C	
2ND L27A	1	159D	
3RD L27A	0	168A	
3RD L27A	1	168B	
4TH L27A	0	168C	
4TH L27A	1	168D	
5TH L27A	0	177A	
5TH L27A	1	177B	
6TH L27A	0	177C	
6TH L27A	1	177D	
1ST L27A% L17A	0	050A	(HOST) CABINET EQUIPPED WITH 14A UNITS AND OTHER UNITS, WITHOUT RES PNL'S.
1ST L27A% L17A	1	141C	
2ND L27A% L17A	0	050B	
2ND L27A% L17A	1	141D	
3RD L27A% L17A	0	050C	
3RD L27A% L17A	1	141A	
4TH L27A% L17A	0	050D	
4TH L27A% L17A	1	141B	
5TH L27A% L17A	0	059A	
5TH L27A% L17A	1	127C	
6TH L27A% L17A	0	059B	
6TH L27A% L17A	1	127D	
7TH L27A% L17A	0	059C	
7TH L27A% L17A	1	127A	
8TH L27A% L17A	0	059D	
8TH L27A% L17A	1	127B	
1ST L27A	0	014A	(REMOTE) CABINET EQUIPPED WITH 14A UNITS ONLY.
1ST L27A	1	050A	
2ND L27A	0	118A	
2ND L27A	1	159A	
3RD L27A	0	014C	
3RD L27A	1	050C	
4TH L27A	0	118C	
4TH L27A	1	159C	
5TH L27A	0	023A	
5TH L27A	1	059A	
6TH L27A	0	127A	
6TH L27A	1	168A	
7TH L27A	0	023C	

*** CONTINUED ***

** CONTINUED **

TABLE AG

7TH L27A	1	059C	
8TH L27A	0	127C	
8TH L27A	1	168C	
9TH L27A	0	032A	
9TH L27A	1	073A	
10TH L27A	0	141A	
10TH L27A	1	177A	
11TH L27A	0	032C	
11TH L27A	1	073C	
12TH L27A	0	141C	
12TH L27A	1	177C	
1ST LCA	LIU	014B	
2ND LCA	LIU	118B	
3RD LCA	LIU	014D	
4TH LCA	LIU	118D	
5TH LCA	LIU	023B	
6TH LCA	LIU	127B	
7TH LCA	LIU	023D	
8TH LCA	LIU	127D	
9TH LCA	LIU	032B	
10TH LCA	LIU	141B	
11TH LCA	LIU	032D	
12TH LCA	LIU	141D	
1ST L27A	0	032C	(REMOTE) CABINET EQUIPPED WITH ONE RES PNL, 14A UNITS AND OTHER UNITS.
1ST L27A	1	159A	
2ND L27A	0	032A	
2ND L27A	1	159C	
3RD L27A	0	023D	
3RD L27A	1	168A	
4TH L27A	0	023A	
4TH L27A	1	168C	
5TH L27A	0	014C	
5TH L27A	1	177A	
6TH L27A	0	014A	
6TH L27A	1	177C	
1ST LCA	LIU	032D	
2ND LCA	LIU	032B	
3RD LCA	LIU	023D	
4TH LCA	LIU	023B	
5TH LCA	LIU	014D	
6TH LCA	LIU	014B	
1ST L27A% L17A	0	050A	(REMOTE) CABINET EQUIPPED WITH 14A UNITS AND OTHER UNITS, WITHOUT RES PNL.
1ST L27A% L17A	1	141C	
2ND L27A% L17A	0	050C	
2ND L27A% L17A	1	141A	
3RD L27A% L17A	0	059A	
3RD L27A% L17A	1	127C	
4TH L27A% L17A	0	059C	
4TH L27A% L17A	1	127A	
5TH L27A% L17A	0	073A	
5TH L27A% L17A	1	118C	
6TH L27A% L17A	0	073C	
6TH L27A% L17A	1	118A	
1ST LCA	LIU	050B	
2ND LCA	LIU	050D	
3RD LCA	LIU	059B	
4TH LCA	LIU	059D	
5TH LCA	LIU	073B	
6TH LCA	LIU	073D	

TABLE AH
RESISTOR PANEL AND 13A RECORDED ANNOUCEMENT UNIT FUSE ASSIGNMENTS FOR J5D003FJ.

LIST	FUSE POS
1ST L17A	050A,050C
	050B,050D
2ND L17A	141A,141C
	141B,141D
3RD L17A	014A,014C
	014B,014D
W/O L7A	
4TH L17A	177A,177C
	177B,177D
OR	
3RD L17A	
WITH L7A	
1ST L7A	014A
2ND L7A	177C
3RD L7A	118A
4TH L7A	073C

TABLE AJ

EQUIPMENT LIST REQUIRED FOR THE "7 R/E NOW" CONFIGURATION		
J5DOO5C-1 LIST DESCRIPTION	LISTS	QTY
5ESS-2000 FRAME	60C	1
MODULAR FUSE FILTER UNIT (MFFU)	54	1
MFFU FUSE DESIGNATION LABELS	HE	1
(2) RS-232 INTERFACE CONVERTERS	102	2
16A ANNOUNCEMENT SYSTEM	93A	1
FIRST 3A SIMPLIFED MESSAGE SERVICE INTERFACE	91A	1
SECOND 3A SIMPLIFIED MESSAGE SERVICE INTERFACE	107	1
VCDX NETRA-T WORKSTATION (ALWAYS REQUIRED))	103	1
MAXTNT EMS NETRA-T WORKSTATION (OPTIONAL)	106	1
HSI/SAI PATCH PANEL ASSEMBLY	104	1
THREE POSITION MODEM SPLITTER ASSEMBLY	105	1
COMSPHERE 3000 CARRIER AND MODEM ASSEMBLY	99	1
2KVA DC TO AC STATIC INVERTER	79B	1
110VAC NINE PLUG POWER OUTLET STRIP	83A	1

COPYRIGHT @ 2001 LUCENT TECHNOLOGIES
ALL RIGHTS RESERVED

BT13

5ESS SWITCHING EQUIPMENT
SPECIFICATION FOR
MISCELLANEOUS CABINET

DWG SIZE C2 | ISSUE 117

LUCENT TECHNOLOGIES INC | J5D005C-1 | SHEET D21 OF 86

PRINTED IN U.S.A.