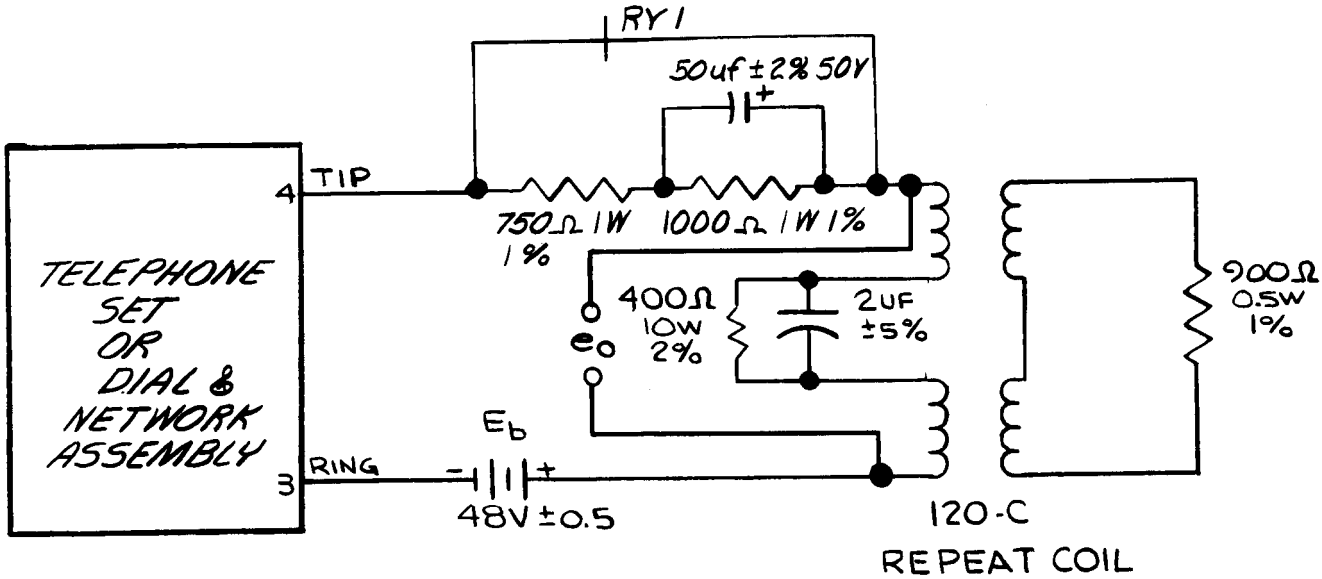

ZERO LOOP TEST RELAY RY AS SHOWN

LOW VOLTAGE TEST RELAY IN OPERATE CONDITION

ENGR BOHL	5-19	4-29-70	ISSUE 1	ADDED: RELAY RY1, CAP 50UF, RES 750Ω, 1000Ω & ASSOC TEST INFO. CHANGED: "TEL SET OR ASSEM." WAS "TOUCH-TONE TEL SET" "eo" LOCATION CANCELED: LINED OUT INFO IN TITLE	1-10-72	LDI 378	.2	DWG	TEST CIRCUIT ~~TRIMLINE HAND TELEPHONE SETS LC & RC TYPE DIALS~~
DRAWN —	—				T.M.C.			USED ON	WESTERN ELECTRIC COMPANY, INC. ENGINEER OF MANUFACTURE
									BELL TELEPHONE LABORATORIES INCORPORATED
									L-763636 SHEET 1
									NO. OF SHEETS PER SET SEE SHEET 1