7 1/8

10 1/4

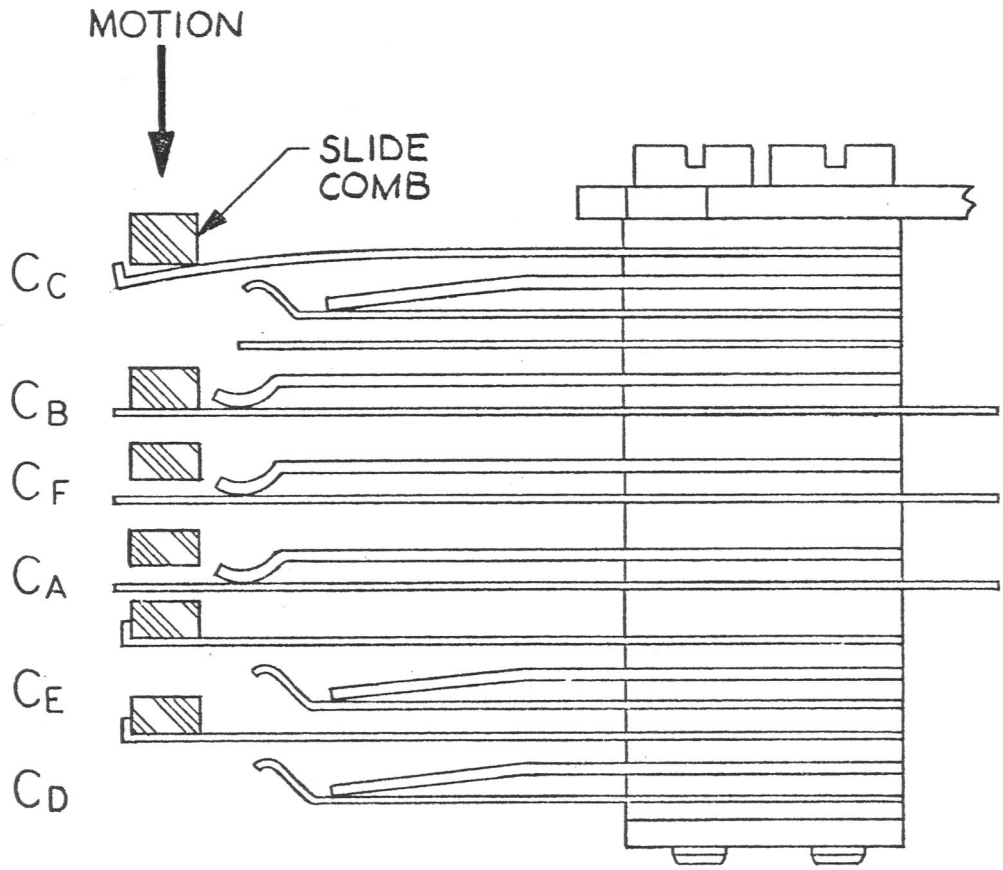

ENGR			
DRAWN M.R. Toole	DWE	JF	
12-4-72		ISSUE 1	
ADDED 35AG3A & AT3A DIAL TO TITLE			
6-5-75 JF		ISSUE 2	
REN ED 35AG3A & F-58566 DIALS FROM TITLE			
6-11-76 JF		ISSUE 3	

BSRS-362,317	
BSRS-451,927	
USED ON	DWG

COMMON SWITCH - 35AG3A & AT3A DIALS

SCALE

WESTERN ELECTRIC COMPANY, INC.
ENGINEER OF MANUFACTURE

BELL TELEPHONE LABORATORIES
INCORPORATED

DWG NO. L-765864

SHEET

NO. OF SHEETS PER SET SEE SHEET 1

A—

MD 604-A (6-65)
PRINTED IN U.S.A.

1S