NOTES:

1.

OS OPTION	FEATURE OR OPTION	SD OPTION	SD
A	FOR OFFICES THAT HAVE BEEN MODIFIED TO COMMON KEY METHOD FOR HOLDING STUCK SENDERS.	FIG. B	68018-01
B	FOR ADDITIONS TO OFFICES THAT HAVE BEEN MODIFIED TO COMMON KEY METHOD AND FOR OFFICES WHERE CHAIN CKT. AND (CTR) KEY METHOD (FIG. A) HAS NEVER BEEN INSTALLED	FIG. C	
ZL	TO CAUSE REORDER AND PARTIAL DIGITS REGISTRATION IF START SIGNAL IS RECEIVED PREMATURELY WHEN PCI IS PROVIDED.	ZL	
ZM	TO CAUSE REORDER AND PARTIAL DIGITS REGISTRATION IF START SIGNAL IS RECEIVED IN UNITS POSITION WHEN PCI IS NOT PROVIDED	ZM	

2. IF SENDER DOES NOT RELEASE WITHIN 10 SECONDS OPERATION OF TM8 RELAY WILL OPERATE THE STUCK SENDER REGISTER AND ALARM.
3. SENDER FORCES NEXT SELECTION TO TELLTALE (OS 153-1) AND ATTEMPTS TO RELEASE. IF NO RELEASE IN 10 SECONDS OPERATION OF TM8 RELAY MAKES A SECOND ATTEMPT FOR REORDER AND RELEASE.
4. "N" SENDER MAY BE THE 2ND, 3RD, 4TH, 5TH, 7TH OR 10TH SENDER TO STICK. THIS CHOICE IS MADE BY MEANS OF STRAPPING WHICH CHANGES THE BIAS OF THE (CHS) RELAY.
5. NC NEXT TO CONTACT MEANS NO CONNECTION ON THAT CONTACT.

SEQUENCE CHART

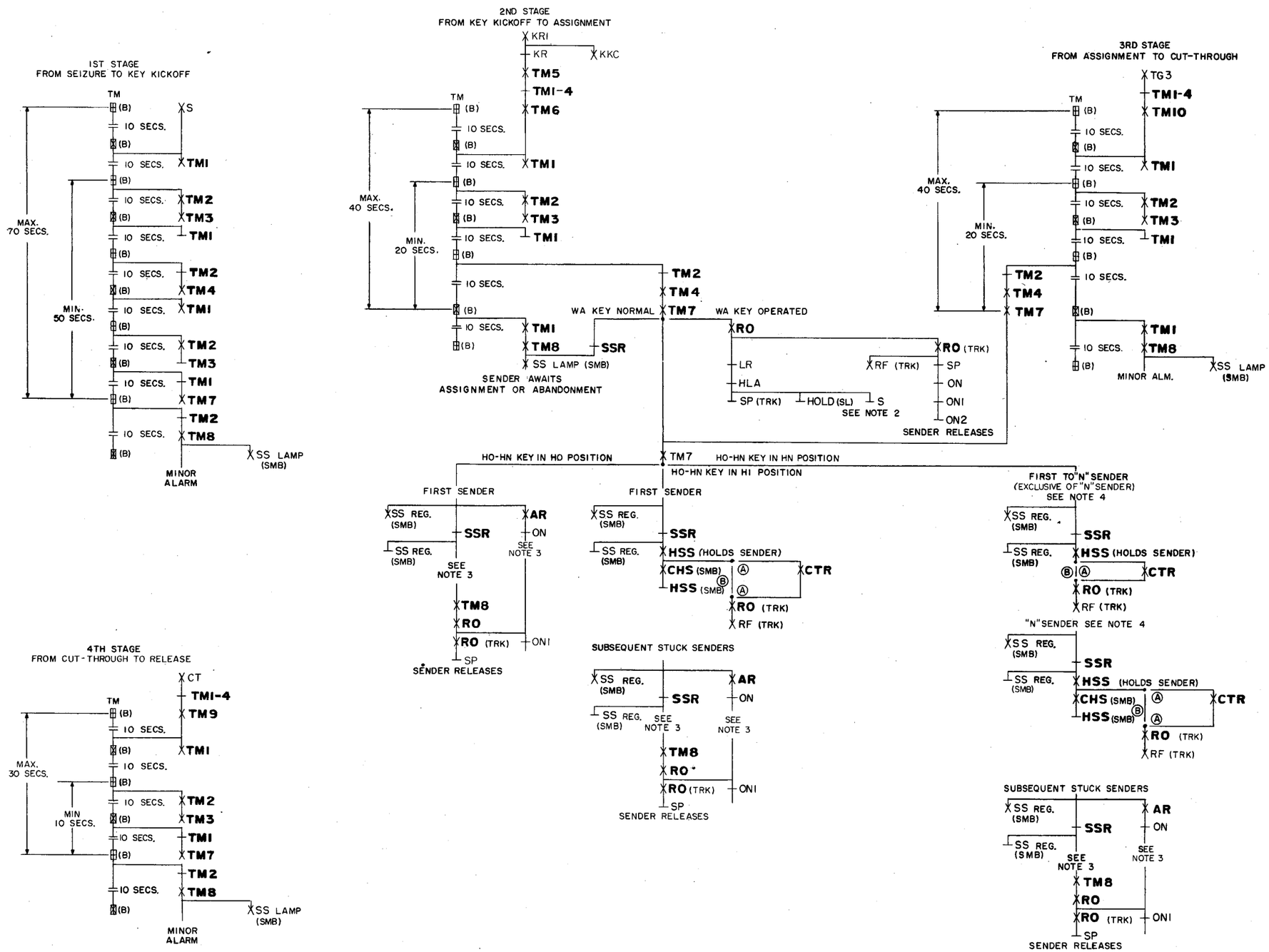

INTERRUPTER FRAME CKT.	SD-68058-01	ISS. 20
MISC. CKT. SENDER MAKE BUSY FR. (4A)	SD-68386-01,	ISS. 5
MISC. CKT. SENDER MAKE BUSY FR. (4M)	SD-68144-01,	ISS. 16
OUTGOING SENDER CKT.	SD-68018-01,	ISS. 28
SENDER LINK & CONNECTOR CKT.	SD-68334-01,	ISS. 14
TOLL SWITCHING TRUNK CKT. - REV. OR PCI	SD-68326-01,	ISS. 10

OUTGOING SENDER
OVER-ALL TIMING
WITH COMMON KEY METHOD
FOR HOLDING STUCK SENDERS

OS 154-2 2 SHEETS, SHEET 1

NO. 4A OR 4M TOLL

ORDER AS BSP ITEM MP-10852

ISSUE	1	J.B.K. R.E.C.
DATE		1-6-54

2 SHEETS, SHEET 1

MP-10852

BELL TELEPHONE LABORATORIES, INC

PRINTED IN U.S.A.

MP-10852

2 SHEETS, SHEET 2

ISSUE	DATE
1	1-9-64

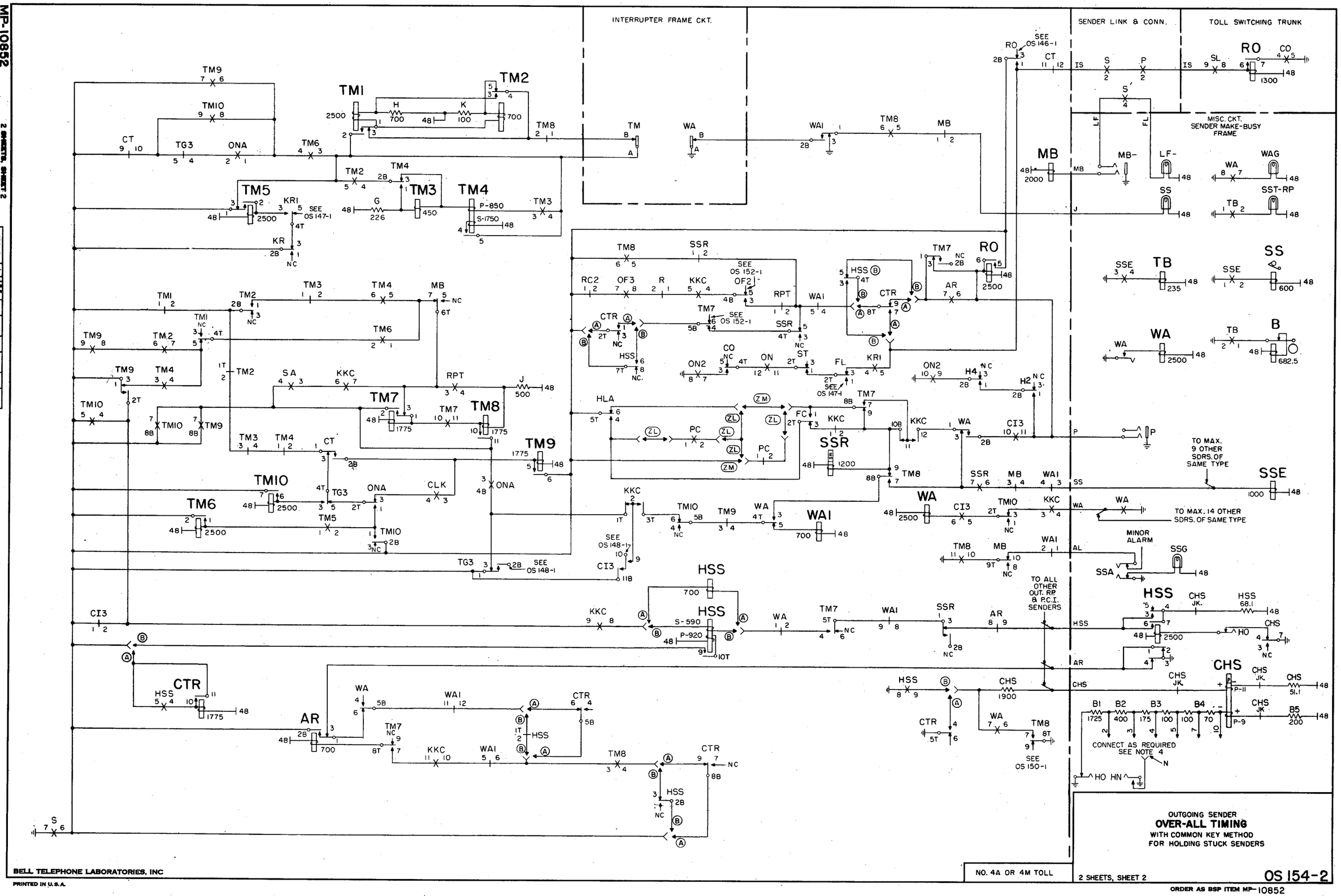

OUTGOING SENDER
OVER-ALL TIMING
WITH COMMON KEY METHOD
FOR HOLDING STUCK SENDERS

2 SHEETS, SHEET 2

OS 154-2