MP-11500

| DATE | ISSUE |
|---|---|
| 3-6-68 | 1 |

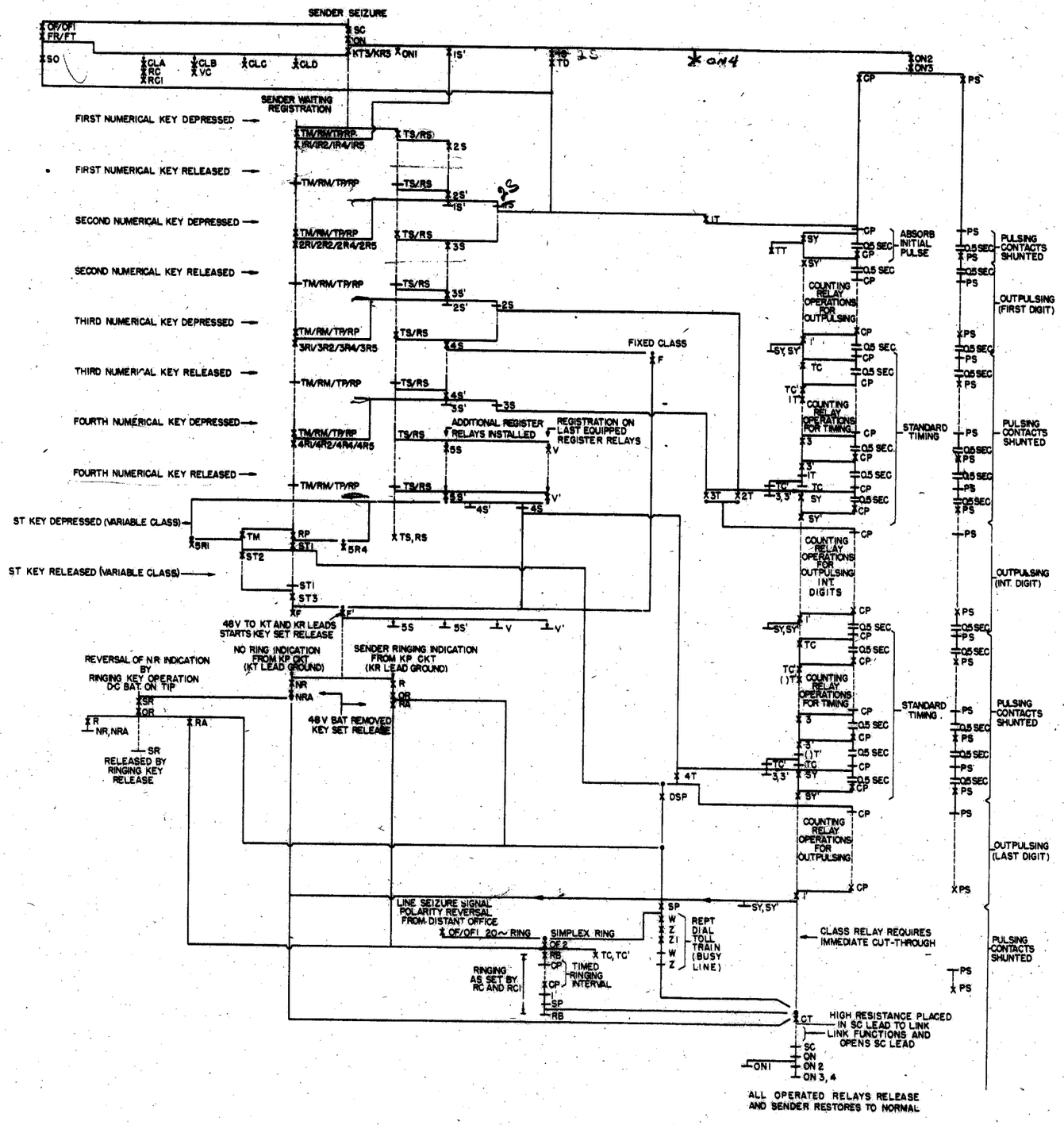


## REGISTRATION CHART

| | KEY | 1 | 2 | 3 | 4 | 5 | 6 | 7 | 8 | 9 | 0 | ST |
|---|---|---|---|---|---|---|---|---|---|---|---|---|
| | LEAD "KT" | H+ | L- | H- | L+ | L+ | H+ | L- | H- | L+ | L+ | H+ |
| | LEAD "KR" | | L+ | L+ | L- | H+ | H+ | H+ | H+ | H- | | L- |
| PULSING RELAYS | (TS) | X | X | X | X | X | X | X | X | X | X | X |
| | (RS) | | X | X | X | X | X | X | X | X | | X |
| | (TM) | X | | X | | | X | | X | | | X |
| | (RM) | | | | | X | X | X | X | X | | |
| | (TP) | | X | X | | | | X | X | | | |
| | (RP) | | | | X | | | | | X | | X |
| REGISTER RELAYS | (R1) | X | | X | | | X | | X | | | X |
| | (R2) | | X | X | | | | X | X | | | |
| | (R4) | | | X | | | | | | X | | X |
| | (R5) | | | | | X | X | X | X | X | | |

H+ INDICATES LOW RESISTANCE GROUND
H- INDICATES LOW RESISTANCE 48V. BATTERY
L+ INDICATES HIGH RESISTANCE GROUND
L- INDICATES HIGH RESISTANCE 48V. BATTERY
X INDICATES RELAY OPERATED

NOTE: SEQUENCE CHART SHOWS OPERATIONS FOR A FOUR-DIGIT CALL. SIMILAR OPERATIONS ARE INVOLVED FOR ADDITIONAL DIGITS.

SENDER CIRCUIT SD-95480-01 I.S.S. 4-8

# SENDER CIRCUIT RECEIVES D-C KEY PULSES TRANSMITS DIAL PULSES 10 P.P.S.-D-C RINGING SIGNAL

NO. 3C OR 3CL TOLL SWBD.

SC 101-1

BELL TELEPHONE LABORATORIES, INC.
PRINTED IN U.S.A.
ORDER AS BSP ITEM MP-11500